VHF DIGITAL TRANSCEIVER

NX-200

SERVICE MANUAL

E version

KENWOOD

Kenwood Corporation

© 2009-1 PRINTED IN JAPAN
B51-8858-00 (N) 157

NX-200 E

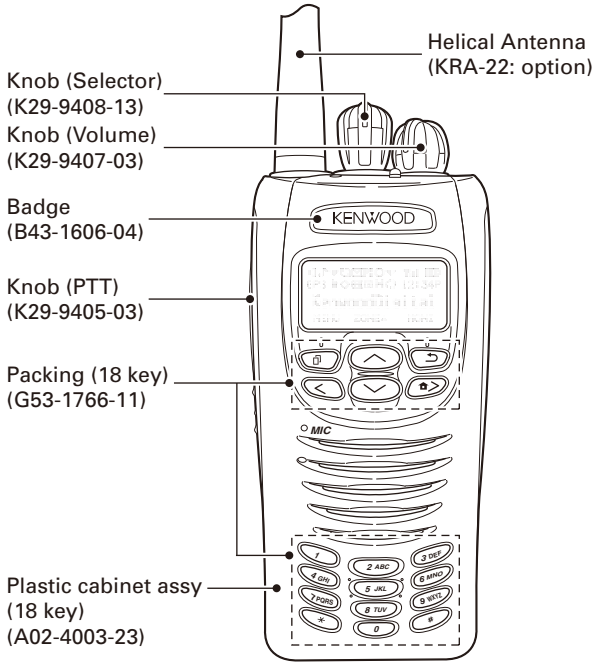

NX-200 E3

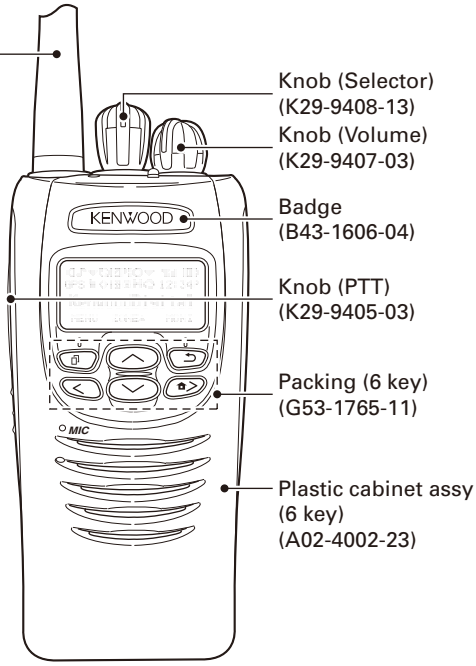

Does not come with antenna. Antenna is available as an option.

CONTENTS

GENERAL 2
SYSTEM SET-UP 3
REALIGNMENT 3
INSTALLATION 7
DISASSEMBLY FOR REPAIR 8
CIRCUIT DESCRIPTION 18
COMPONENTS DESCRIPTION 24
PARTS LIST 26
EXPLODED VIEW 37
PACKING 38
TROUBLE SHOOTING 39
ADJUSTMENT 43
TERMINAL FUNCTION 68
PC BOARD
- **CONTROL UNIT (X53-4260-XX)** 76
- **TX-RX UNIT (X57-7360-10)** 80

INTERCONNECTION DIAGRAM 84
SCHEMATIC DIAGRAM 86
BLOCK DIAGRAM 100
LEVEL DIAGRAM 104
OPTIONAL ACCESSORIES
- **KNB-47L (Li-ion Battery Pack)** 105
- **KNB-48L (Li-ion Battery Pack)** 105

SPECIFICATIONS ..... **BACK COVER**

This product complies with the **RoHS** directive for the European market.

This product uses Lead Free solder.

Document Copyrights

Copyright 2009 by Kenwood Corporation. All rights reserved.

No part of this manual may be reproduced, translated, distributed, or transmitted in any form or by any means, electronic, mechanical, photocopying, recording, or otherwise, for any purpose without the prior written permission of Kenwood.

Disclaimer

While every precaution has been taken in the preparation of this manual, Kenwood assumes no responsibility for errors or omissions. Neither is any liability assumed for damages resulting from the use of the information contained herein. Kenwood reserves the right to make changes to any products herein at any time for improvement purposes.

Firmware Copyrights

The title to and ownership of copyrights for firmware embedded in Kenwood product memories are reserved for Kenwood Corporation. Any modifying, reverse engineering, copy, reproducing or disclosing on an Internet website of the firmware is strictly prohibited without prior written consent of Kenwood Corporation. Furthermore, any reselling, assigning or transferring of the firmware is also strictly prohibited without embedding the firmware in Kenwood product memories.

NXDN Transceivers:

The AMBE+2(TM) voice coding technology is embedded in the firmware under the license of Digital Voice Systems, Inc.

GENERAL

INTRODUCTION

SCOPE OF THIS MANUAL

This manual is intended for use by experienced technicians familiar with similar types of commercial grade communications equipment. It contains all required service information for the equipment and is current as of the publication date. Changes which may occur after publication are covered by either Service Bulletins or Manual Revisions. These are issued as required.

ORDERING REPLACEMENT PARTS

When ordering replacement parts or equipment information, the full part identification number should be included. This applies to all parts : components, kits, or chassis. If the part number is not known, include the chassis or kit number of which it is a part, and a sufficient description of the required component for proper identification.

PERSONAL SAFETY

The following precautions are recommended for personal safety:

- DO NOT transmit until all RF connectors are verified secure and any open connectors are properly terminated.
- SHUT OFF and DO NOT operate this equipment near electrical blasting caps or in an explosive atmosphere.
- This equipment should be serviced by a qualified technician only.

SERVICE

This transceiver is designed for easy servicing. Refer to the schematic diagrams, printed circuit board views, and alignment procedures contained within.

SYSTEM SET-UP

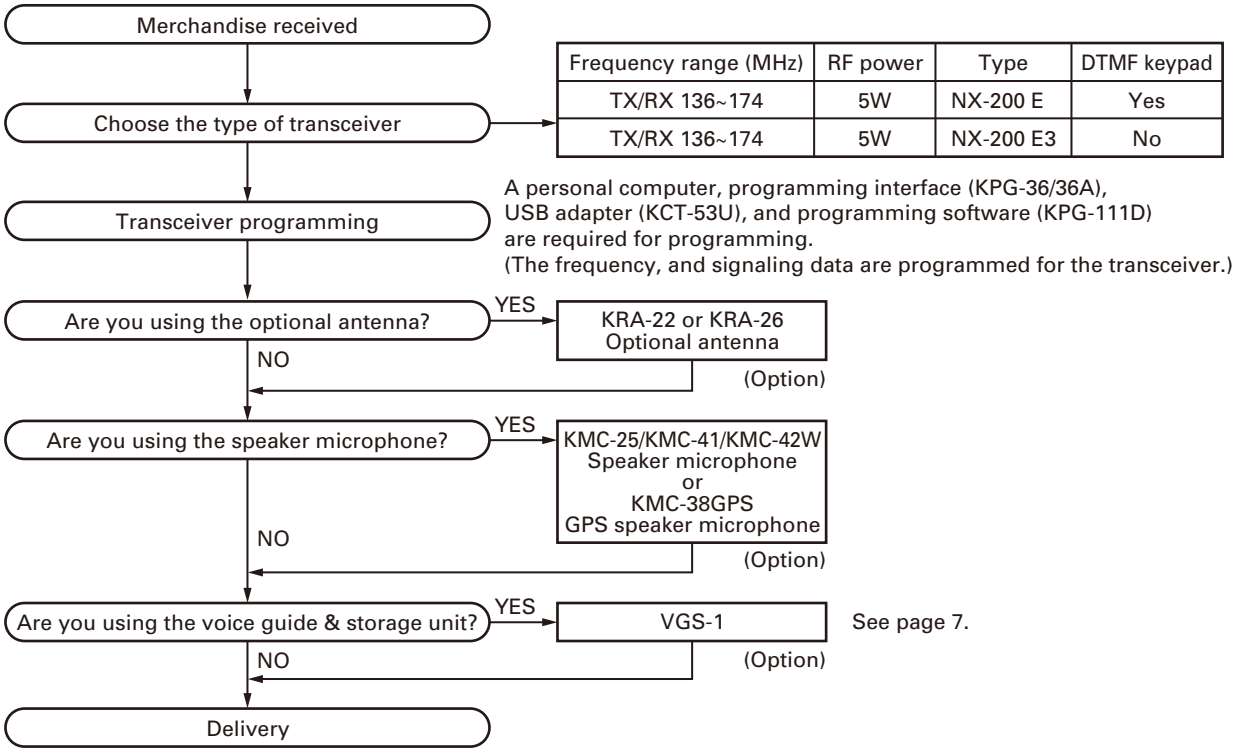

Frequency range (MHz)	RF power	Type	DTMF keypad
TX/RX 136~174	5W	NX-200 E	Yes
TX/RX 136~174	5W	NX-200 E3	No

REALIGNMENT

1. Modes

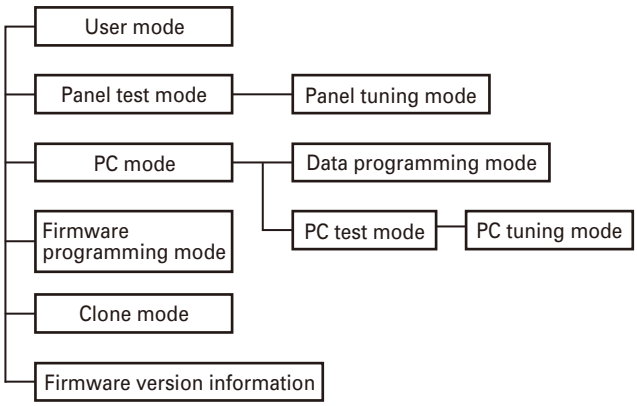

Mode	Function
User mode	For normal use.
Panel test mode	Used by the dealer to check the fundamental characteristics.
Panel tuning mode	Used by the dealer to tune the transceiver.
PC mode	Used for communication between the transceiver and PC.
Data programming mode	Used to read and write frequency data and other features to and from the transceiver.
PC test mode	Used to check the transceiver using the PC. This feature is included in the FPU. See pages 51 to 67.
Firmware programming mode	Used when changing the main program of the flash memory.
Clone mode	Used to transfer programming data from one transceiver to another.
Firmware version information	Used to confirm the internal firmware version.

REALIGNMENT

2. How to Enter Each Mode

Mode	Operation
User mode	Power ON
Panel test mode	[⮌] + Power ON
PC mode	Received commands from PC
Panel tuning mode	[Panel test mode] + [⧉]
Firmware programming mode	[⧉] + Power ON
Clone mode	[<] + Power ON
Firmware version information	[Side1] + Power ON

3. Panel Test Mode

Setting method refer to ADJUSTMENT.

4. Panel Tuning Mode

Setting method refer to ADJUSTMENT.

5. PC Mode

5-1. Preface

The transceiver is programmed by using a personal computer, programming interface (KPG-36/36A), USB adapter (KCT-53U) and programming software (KPG-111D).

The programming software can be used with a PC or compatible. Figure 1 shows the setup of a PC for programming.

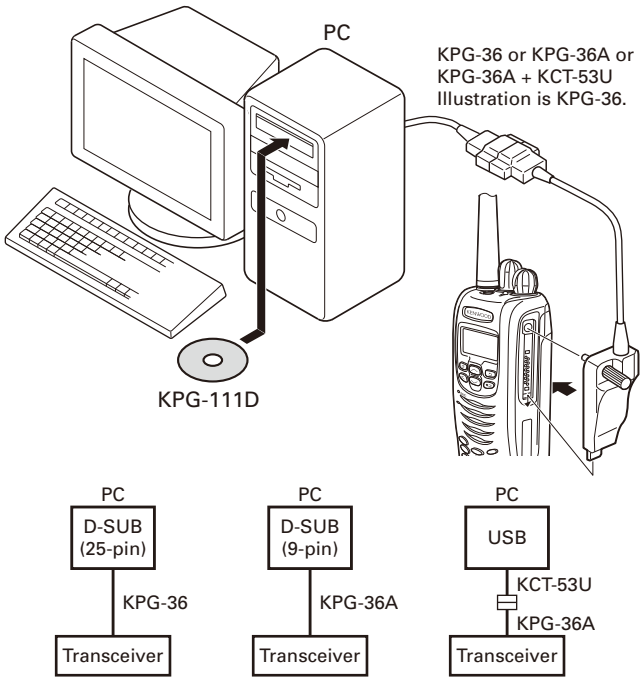

Fig. 1

5-2. Connection procedure

1. Connect the transceiver to the computer using the interface cable and USB adapter (When the interface cable is KPG-36A, the KCT-53U can be used.).

Note:

- You must install the KCT-53U driver in the computer to use the USB adapter (KCT-53U).
- When using the USB adapter (KCT-53U) for the first time, plug the KCT-53U into a USB port on the computer with the computer power ON.

2. When the POWER switch on, user mode can be entered immediately. When PC sends command the transceiver enter PC mode, and "PROGRAM" is displayed on the LCD.
   When data transmitting from transceiver, the red LED is lights.
   When data receiving to transceiver, the green LED is lights.

Note:

The data stored in the computer must match the "Model Name" when it is written into the flash memory.

5-3. KPG-36/KPG-36A description (PC programming interface cable: Option)

The KPG-36/36A is required to interface the transceiver to the computer. It has a circuit in its D-sub connector (KPG-36: 25-pin, KPG-36A: 9-pin) case that converts the RS-232C logic level to the TTL level.

The KPG-36/36A connects the universal connector of the transceiver to the RS-232C serial port of the computer.

5-4. KCT-53U description (USB adapter: Option)

The KCT-53U is a cable which connects the KPG-36A to a USB port on a computer.

When using the KCT-53U, install the supplied CD-ROM (with driver software) in the computer. The KCT-53U driver runs under Windows 2000, XP or Vista (32-bit).

5-5. Programming software KPG-111D description

The KPG-111D is the programming software for the transceiver supplied on a CD-ROM. This software runs under MS-Windows 2000, XP or Vista (32-bit) on a PC or compatible machine.

The data can be input to or read from the transceiver and edited on the screen. The programmed or edited data can be printed out. It is also possible to tune the transceiver.

6. Firmware Programming Mode

6-1. Preface

Flash memory is mounted on the transceiver. This allows the transceiver to be upgraded when new features are released in the future. (For details on how to obtain the firmware, contact Customer Service.)

REALIGNMENT

6-2. Connection procedure

Connect the transceiver to the personal computer using the interface cable (KPG-36/36A) and USB adapter (KCT-53U: when the interface cable is KPG-36A, the KCT-53U can be used.). (Connection is the same as in the PC Mode.)

6-3. Programming

1. Start up the firmware programming software (Fpro.exe (ver. 4.0 or later)). The Fpro.exe exists in the KPG-111D installed holder.
2. Set the communications speed (normally, 115200 bps) and communications port in the configuration item.
3. Set the firmware to be updated by File name item.
4. Press and hold the [⧉] key while turning the transceiver power ON. Then, the orange LED on the transceiver lights and "PROGRAM 115200" is displayed.
5. Check the connection between the transceiver and the personal computer, and make sure that the transceiver is in the Program mode.
6. Press "write" button in the window. When the transceiver starts to receive data, the [LOADING] display lights.
7. If writing ends successfully, the checksum is calculated and a result is displayed.
8. If you want to continue programming other transceivers, repeat steps 4 to 7.

Note:

This mode cannot be entered if the Firmware Programming mode is set to Disable in the Programming software.

6-4. Function

1. If you press the [Side2] key while "PROGRAM 115200" is displayed, the display changes to "PROGRAM 19200" (The LED blinks green) to indicate that the write speed is low speed (19200 bps). If you press the [Side2] key again while "PROGRAM 19200" is displayed, the display changes to "PROGRAM 38400" (The LED lights red and orange alternatively). If you press the [Side2] key again while "PROGRAM 38400" is displayed, the display changes to "PROGRAM 57600" (The LED blinks orange). If you press the [Side2] key again while "PROGRAM 57600" is displayed, the display returns to "PROGRAM 115200" (The LED lights orange).
2. If you press the [Side1] key while "PROGRAM 115200" is displayed, the checksum is calculated, and a result is displayed. If you press the [Side1] key again while the checksum is displayed, "PROGRAM 115200" is redisplayed.

Note:

Normally, write in the high-speed mode.

7. Clone Mode

Programming data can be transferred from one transceiver to another by connecting them via their external universal connectors. The operation is as follows (the transmit transceiver is the source and the receive transceiver is a target).

The following data cannot be cloned.

- Tuning data
- Embedded message with password
- Model name data
- ESN (Electronic Serial Number) data

Note:

The following data can be cloned.

- Fleet (own)/ID (own) for FleetSync
- Unit ID (own) for NXDN

Key guide on the Read authorization password input screen.

- CONFRM ([⧉] key): The password confirmation
- DELETE ([⮌] key): Delete the least digit from the current password number (Press and hold to delete all password numbers)
- SELECT ([⧉] key): Determine the least digit of the password number

1. Press and hold the [<] key while turning the transceiver power ON. If the Read authorization password is set to the transceiver, the transceiver displays "CLONE LOCK". If the password is not set, the transceiver displays "CLONE MODE".
2. When you enter the correct password, and "CLONE MODE" is displayed, the transceiver can be used as the cloning source. The following describes how to enter the password.
3.

- **How to enter the password using the keypad (E models only);**
  If one of keys 0 to 9 is pressed while the "CLONE LOCK" is displayed, the pressed number is displayed on the LCD.
  Each press of the key shifts the display in order to the left.
  When you enter the password and press the [⧉] or [*] key, "CLONE MODE" is displayed if the entered password is correct. If the password is incorrect, "CLONE LOCK" is redisplayed.
- **How to enter the password using the [⌃] and [⌄] keys (E, E3 models);**
  If the [⌃] / [⌄] key is pressed while "CLONE LOCK" is displayed, the Read authorization password input screen is displayed.
  If the [⌃] key or [⌄] key is pressed while the Read authorization password input screen is displayed, the number (0 to 9) blinks on the LCD. When you press the [⧉] key, the currently selected number is determined.

REALIGNMENT

If you press the [⧉] key after entering the password in this procedure, "CLONE MODE" is displayed if the entered password is correct. If the password is incorrect, "CLONE LOCK" is redisplayed.

4. Power ON the target transceiver.
5. Connect the cloning cable (part No. E30-3325-05) to the universal connectors on the source and target.
6. Press the [⧉] key on the source while the source displays "CLONE MODE". The data of the source is sent to the target. While the target is receiving the data, "PROGRAM" is displayed. When cloning of data is completed, the source displays "END", and the target automatically operates in the User mode. The target can then be operated by the same program as the source.
7. The other target can be continuously cloned. When the [⧉] key on the source is pressed while the source displays "END", the source displays "CLONE MODE". Carry out the operation in step 4 to 6.

Note:

- Cannot be cloned if the password (overwrite password) is programmed to the target.
- "Model Name" must be same to clone the transceiver.

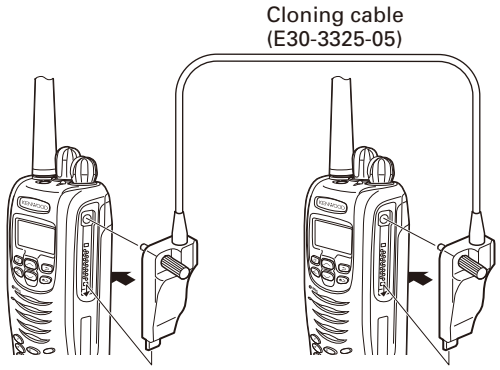

Fig. 2

8. Firmware Version Information

Press and hold the [Side1] key while turning the transceiver power ON and then keep pressing and holding the [Side1] key, the firmware version information appears on the LCD.

INSTALLATION

Voice Guide & Storage Unit (VGS-1: Option)

■ Installing the VGS-1 (Voice Guide & Storage Unit) in the transceiver

1. Remove the bond from between the chassis and the screw for the option board cover using a pair of tweezers.

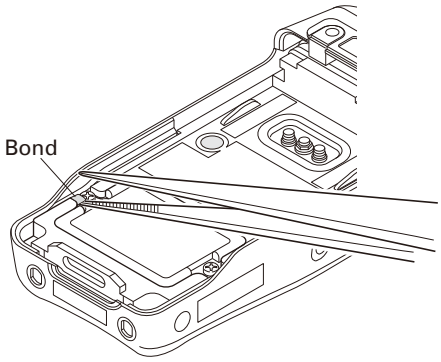

2. Remove the two screws from the cover.
3. Remove the cover by inserting the tip of a pair of tweezers into the screw hole of the cover and prying it open.

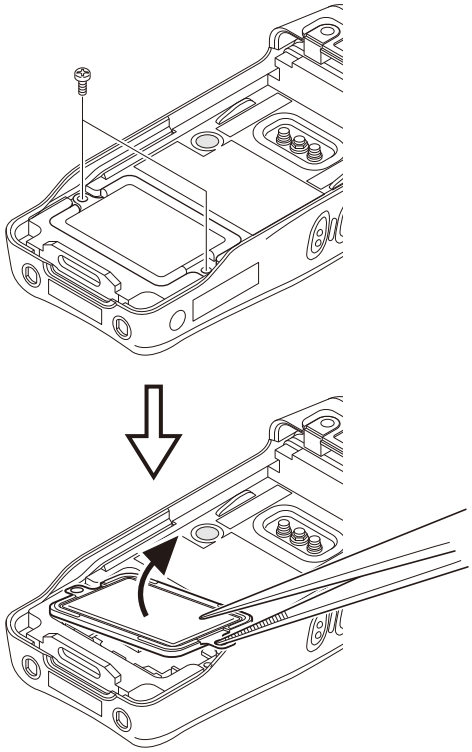

4. Remove the OPTION PCB from the connector (CN710) of the Control PCB.

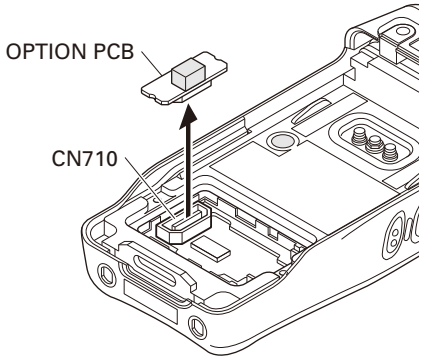

5. Attach the flat spring (G02-1846-03) to the VGS-1 as shown in the figure.
   Note:
   Attach the flat spring so that its convex fits the PCB hollow of the VGS-1.
6. Attach the cushion (G13-1974-04) to the VGS-1 as shown in the figure.
   Note:
   Be sure not to cover the VGS-1 connector with the cushion.
7. Insert the VGS-1 connector into the connector (CN710) of the Control PCB.

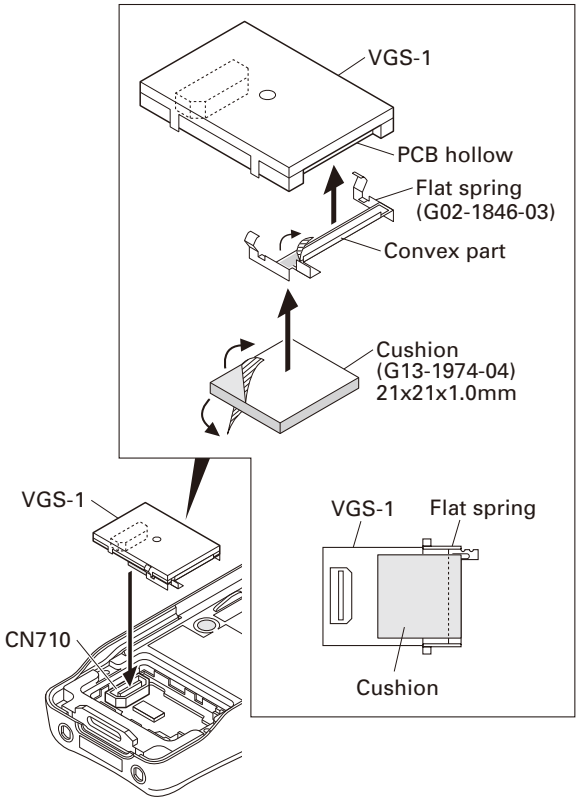

8. Reinstall the cover using the two screws removed in step 2.
9. Perform the water resistance confirmation and then apply the bond to the two left side screws, tightened in the rear of the transceiver. (Refer to pages 14 to 17.)

DISASSEMBLY FOR REPAIR

1. Precautions for Waterproof

- Do not remove the black sheet from the reverse side of the transceiver (refer to the illustration below). Removal of this sheet decreases the waterproof efficiency of the transceiver and may cause malfunctions if water seeps into the transceiver.
- The orange packing material on the reverse side of the transceiver is important with respect to the waterproof efficiency of the transceiver. Do not place stickers or other materials on or around the packing material shown in the figure, or on the reverse side of the battery pack. Doing so will impair the waterproof efficiency of the transceiver and may cause it to break down. Additionally, in order to prevent damage to the packing material, do not allow it to come in contact with foreign materials.

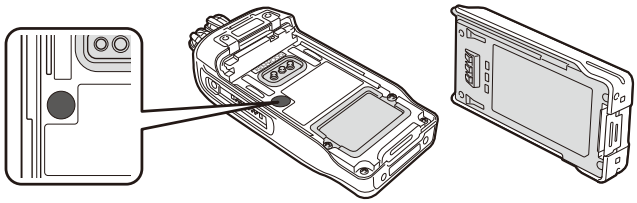

■ Water resistance maintenance of the transceiver

The transceiver satisfies protection levels (IP standard) IP67 specified by international standard IEC 60529. IP indicates a level of dust resistance and water resistance. The first characteristic numeral indicates "dust resistance", and the second characteristic numeral indicates "water resistance".

The overview of the IP67 requirements are provided below:

- IP6* (Dust resistant type): Reduce pressure in the set to a maximum of 2kPa to prevent entry of dust of 25 microns.
- IP*7 (Water immersion endurance): There is no ill effect on performance or function when the unit is immersed in water at a depth of 0.15 to 1m (0.49 to 3.28 feet) for 30 minutes. (In case of the test unit with a height less than 850mm, the bottom part of test unit can be placed 1000mm below the surface of the water.)

Disassemble the transceiver with the facility or in the environment in which water resistance can be fully confirmed.

Those who perform the procedure described here must be experienced qualified engineers who understand the contents of this service manual (B51-8858-00).

Perform the following work when you restore the waterproof performance of the transceiver at the IP67 level after the transceiver is repaired.

Attach the two pieces of double-sided adhesive tape (J99-0727-04, J99-0728-04) between the top packing and the chassis.	Refer to page 9.
Apply the silicon grease (W05-1492-00) onto the speaker part of the key top and around the chassis.	Refer to page 11.
Apply the silicon grease (W05-1492-00) around the hole of the negative (-) terminal in the rear of the chassis.	Refer to page 11.
Perform "Leakage Location Identification" and identify the location where air is leaking.	Refer to page 15.
Repair the location where air is leaking. (step 8 of "Leakage Location Identification")	Refer to page 16.
Apply bond to the top of the left side screw for the chassis and between the chassis and the left side screw for the option board cover.	Refer to page 16.

■ Repair procedure flow chart

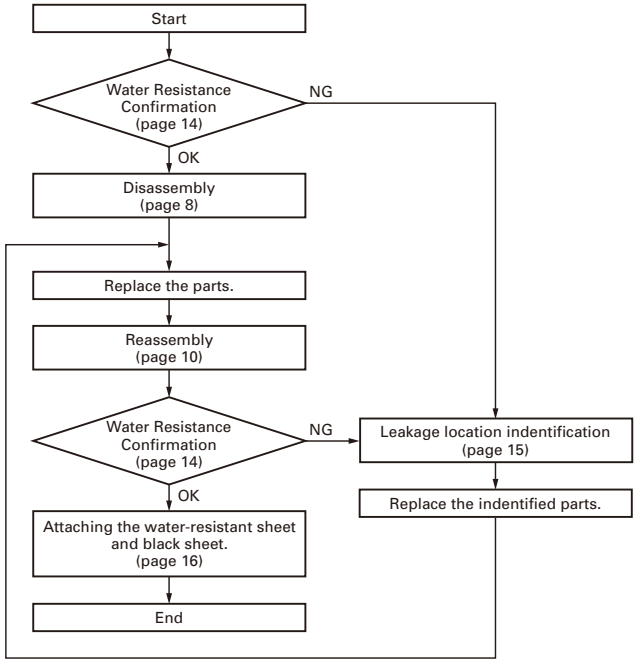

2. Precautions for Disassembly

Perform "Water Resistance Confirmation" on page 14 before disassembling the transceiver. If it fails, perform "Leakage Location Identification" on page 15.

■ Disassembly procedure

1. Remove the channel knob ① and volume knob ②.
2. Remove the bond ③ from the screw using a pair of tweezers.
3. Remove the two screws ④.
4. Lift and remove the chassis from the case.

DISASSEMBLY FOR REPAIR

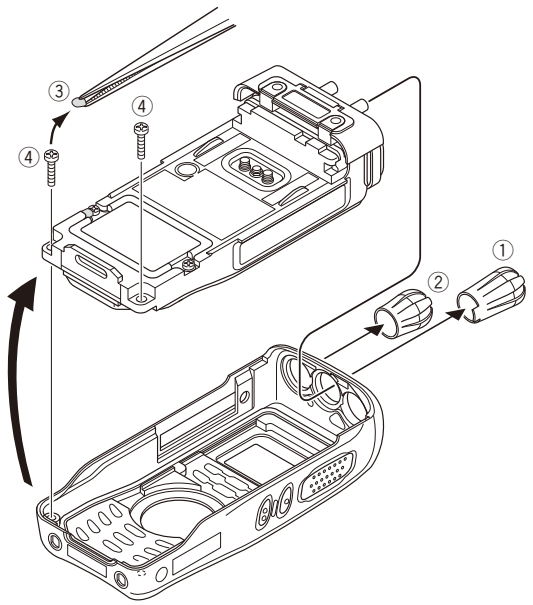

■ Removing the TX-RX unit from the chassis

1. Remove the cord ASSY from the connector of the TX-RX unit (CN400) ①.
2. Remove the PTT FPC from the connector of the TX-RX unit (CN401) ②.
3. Remove the 14 screws ③.
4. Anchor the screw hole of the TX-RX unit using the tip of a pair of tweezers as shown in the figure. Then, lift the TX-RX unit to remove it from the chassis ④.

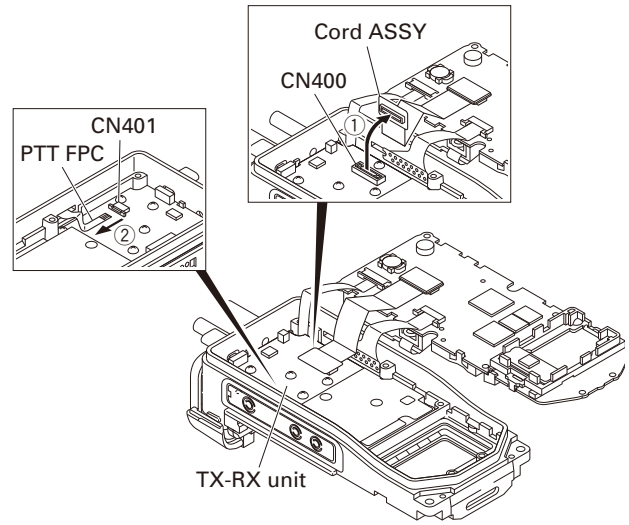

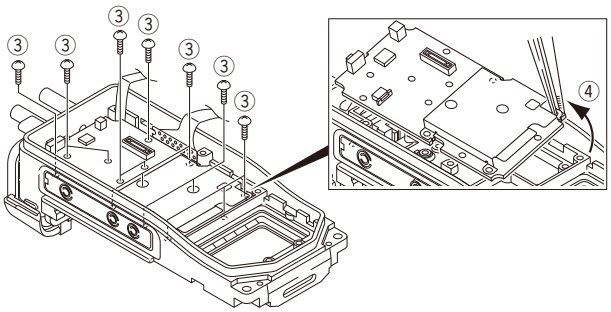

■ Removing the TOP packing (G53-1762-02)

1. Pull the TOP packing to the left to remove the packing that is fit into the left groove of the chassis ①.
2. Pull the TOP packing to the right to remove the packing that is fit into the right groove of the chassis ②.
3. Turn back the TOP packing as shown in the figure ③.
4. Remove the TOP packing ④.

Note:
Take care not to damage the TOP packing when peeling off, as it is attached to the chassis with two pieces of double-sided adhesive tape (J99-0727-04, J99-0728-04).

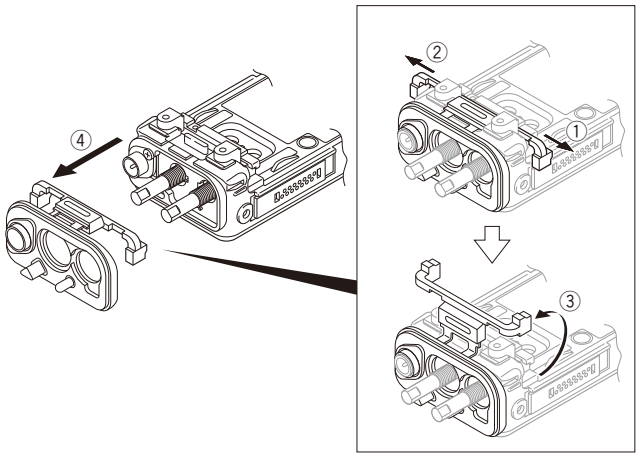

Note:
The two pieces of double-sided adhesive tape attached to the TOP packing cannot be reused.
Perform the following procedures when you reassemble the TOP packing.

1) Attach the TOP packing after attaching new double-sided adhesive tape to the chassis as shown in the figure.

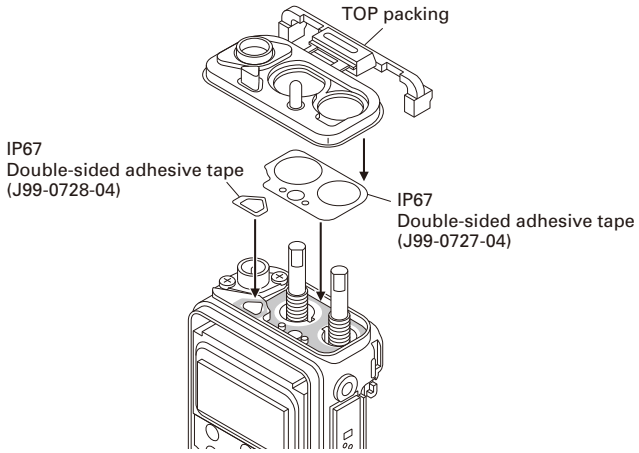

DISASSEMBLY FOR REPAIR

2) Move the TOP packing as shown in the figure, and attach it to the chassis ①.
3) Fit the TOP packing into the right groove of the chassis ②.
4) Fit the TOP packing into the left groove of the chassis ③.

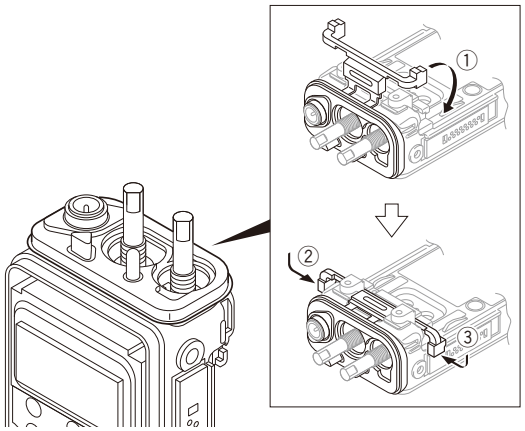

■ **Removing the lithium cell (W09-0971-05)**

Insert a non-conductive screwdriver to groove of one side of the socket (CN401) and pry the lithium cell up from the socket.

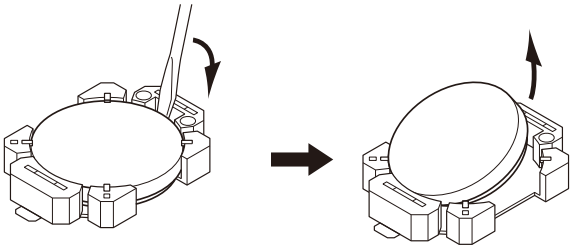

■ **Installing the lithium cell (W09-0971-05)**

Insert a lithium cell into one side of the socket (CN401). Push the lithium cell to insert the lithium cell into the socket.

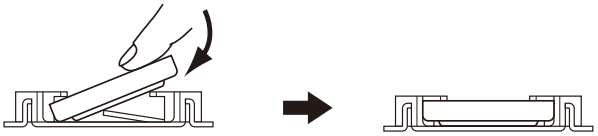

3. Precautions for Reassembly

■ **Installing the option board cover onto the chassis**

1. Install the option board cover onto the chassis using the two screws.
   Note:
   Confirm that there is no foreign matters on the waterproof rib of the option board cover. (Wipe it clean when foreign matters adhere to it.)

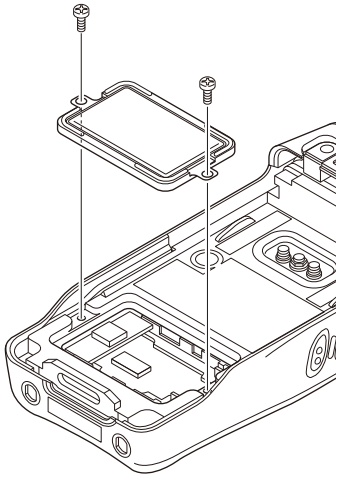

2. Perform the water resistance confirmation and then apply the bond to the two left side screws, tightened in the rear of the transceiver. (Refer to pages 14 to 17.)

■ **Inserting the Volume and Channel switch into the chassis**

Insert the volume and channel switch into the chassis with the VOL/CH FPC formed as shown in the figure.

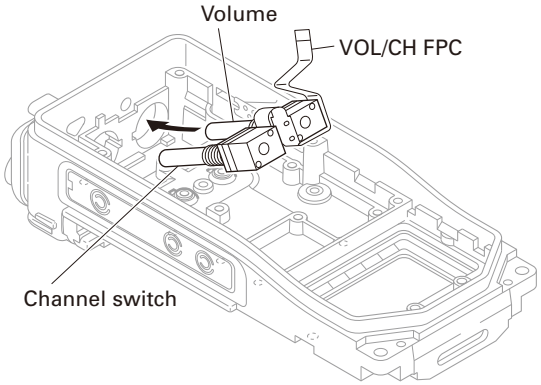

■ **Forming the VOL/CH FPC, Cord ASSY and Universal connector FPC**

Form the VOL/CH FPC, Cord ASSY and Universal connector FPC as shown in the figure.

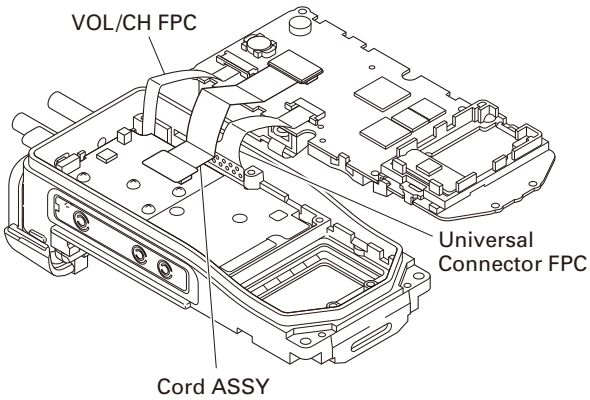

DISASSEMBLY FOR REPAIR

Note:
Fold indications are printed on the Cord ASSY and Universal Connector FPC.
"——" line shows creased line on the top.
"- - - -" line shows creased line on the bottom.

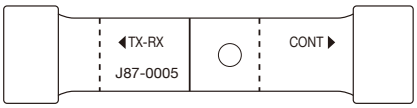

Cord ASSY

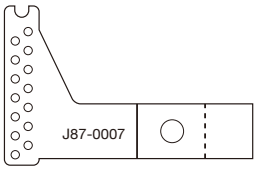

Universal Connector FPC

■ Mounting the chassis onto the case

1. Apply the silicon grease (W05-1492-00) onto the speaker part of the key top and around the chassis.

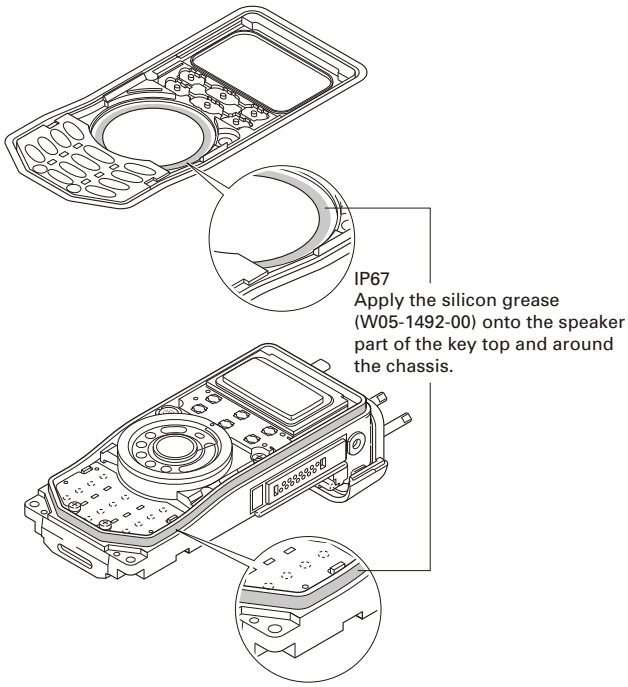

2. Place the key top on the chassis. Then, fit the chassis tightly into the groove of the key top ①.
   Note:
   Confirm that the entire groove of the key top fits to the chassis tightly.
3. Mount the chassis onto the case ②.
   Note:
   After mounting the chassis onto the case, if the 18-key part on the key top or the Auxiliary (Orange) key part of the VOL/CH packing gets stuck inside the case as shown in the figure, return it to the normal position using a soft tipped item (e.g., finger) ③.
   Prying it with a pointed metal tool such as forceps, may damage the key top or packing.

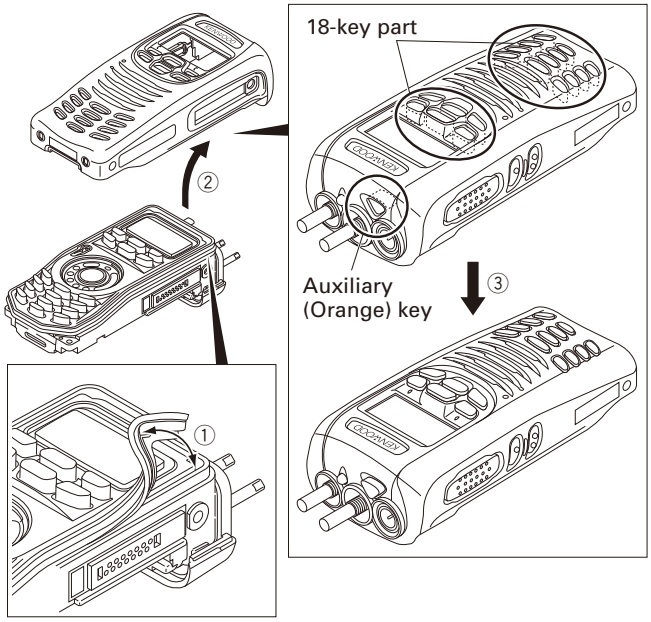

■ Correspondence when replacing the Terminal block (E72-0425-03) or Packing (G53-1763-03)

Apply the silicon grease (W05-1492-00) around the hole of the negative (–) terminal in the rear of the chassis when replacing the terminal block (E72-0425-03) or packing (G53-1763-03).

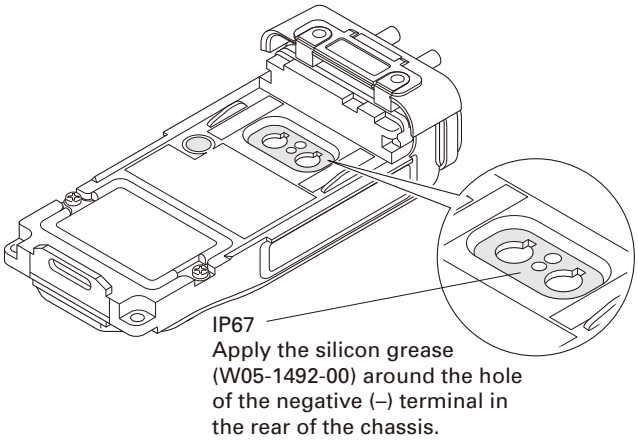

DISASSEMBLY FOR REPAIR

■ Relay hardware (E29-1221-14) installation procedure

1. Fit one side of the relay hardware to a right corner of the chassis using a pair of tweezers ①.
2. Fit the other side of the relay hardware to the rib of the chassis ②.

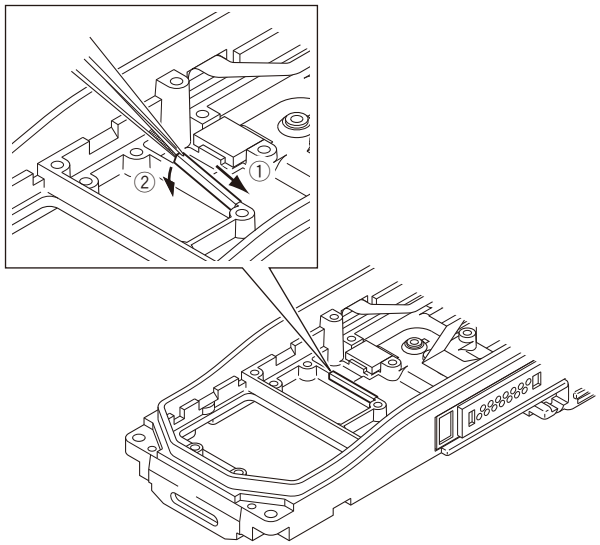

■ Affixing the keyboard ASSY (S79-0472-05)

Affix the keyboard ASSY to the Control unit as shown in the figure.

After affixing the keyboard ASSY to the Control unit, confirm that the three positioning holes of the keyboard ASSY and the Control unit are not misaligned.

Note:

If the holder (Option board) is removed from the Control unit, it becomes easy to confirm the three positioning holes.

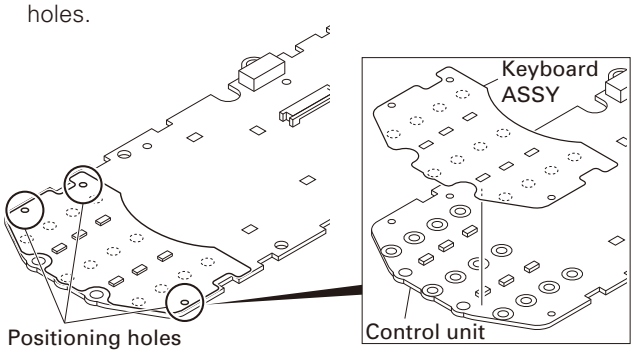

■ Changing the channel selector from 16-channel operation to free

1. Remove the channel selector knob.
2. Remove the circular nut.
3. Remove the mechanical stopper.
4. Reassemble the circular nut and channel selector knob that were removed in steps 1 and 2, in their original positions.

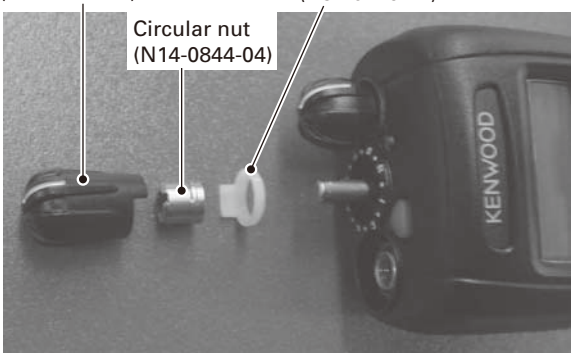

DISASSEMBLY FOR REPAIR

■ Assembly information (Sheet/Cushion)

When "Main Parts" is changed (ordered), "Assembled Sheet/Cushion" should also be changed (ordered) together.
The Sticker and Sheet etc are non-reusable parts. It requires the new one to get the radio's performance after repairs.
For example, when "Plastic Cabinet (A02-4002-23 (6-key)/A02-4003-23 (18-key))" is changed, "Sticker (B42-7296-04)", "Badge (B43-1606-04)" and "Fibrous Sheet (G10-1373-04)" should be ordered and changed together because Sticker (B42-7296-04), Badge (B43-1606-04) and Fibrous Sheet (G10-1373-04) are non-reusable.

Main Parts		Assembled Sheet/ Cushion		
Part Name	**Part Number**	**Part Name**	**Part Number**	**Remark**
Plastic Cabinet (6-key)	A02-4002-23	Sticker	B42-7296-04	"NXDN" is printed.
Plastic Cabinet (18-key)	A02-4003-23	Badge	B43-1606-04	"KENWOOD" is printed.
		Fibrous Sheet (SP)	G10-1373-04	
LCD ASSY	B38-0923-05	Adhesive Sheet (LCD)	J99-0714-04	Used for fixing the LCD ASSY on the Illumination Guide (LCD). Also used for fixing the Illumination Guide (LCD) on the Control Unit.
Cord ASSY (50-pin FPC)	X42-3340-10	Cushion (50-pin FPC)	G13-2258-04	
Speaker	T07-0755-15	Rubber Cushion (SP)	G11-4272-14	
		Sheet (SP)	G11-4458-14	Used for stabilizing the waterproof performance. "•" (a hole) on the Sheet (SP) shows the upper side (6-key FPC side).
Switch Unit (6-key FPC)	X41-3720-10	Adhesive Sheet (6-key FPC)	J99-0390-04	Used for fixing the Switch Unit (6-key FPC) from the back side of the Holder (FG-SP) before soldering.
		Adhesive Sheet (6-key FPC)	J99-0712-14	Used for fixing the Switch Unit (6-key FPC) on the Holder (FG-SP).
Switch Unit (PTT FPC)	X41-3710-10	Sheet (PTT)	G11-4428-04	Used for fixing the Push Knob (PTT) on the Switch Unit (PTT FPC) and stabilizing the waterproof performance.
		Adhesive Sheet (PTT FPC)	J99-0711-04	Used for fixing the Switch Unit (PTT FPC) on the Chassis.
Chassis	A10-4127-01	Relay Hardware (VCO-Chassis)	E29-1221-14	Used for stabilizing the shield performance of the VCO.
		Sheet (Air)	G11-4331-04	This sheet is put on the leak check hole. This sheet lets air through, but does not let water through.
		Rubber Sheet (FET)	G11-4429-04	Used for stabilizing the radiation performance of the FET.
		Sheet (Air)	G11-4440-04	This sheet is a protect cover of the sheet (G11-4331-04).
		Cushion (ANT)	G13-2220-04	Used for fixing the Terminal ASSY.
Terminal Block	E72-0425-03	Adhesive Sheet (Terminal Block)	J99-0725-04	Used for fixing the Terminal Block and the Packing (Terminal Block).

DISASSEMBLY FOR REPAIR

4. Water-resistant Inspection Method

Preparation

• Water-resistant Inspection Jig (W05-1499-00)

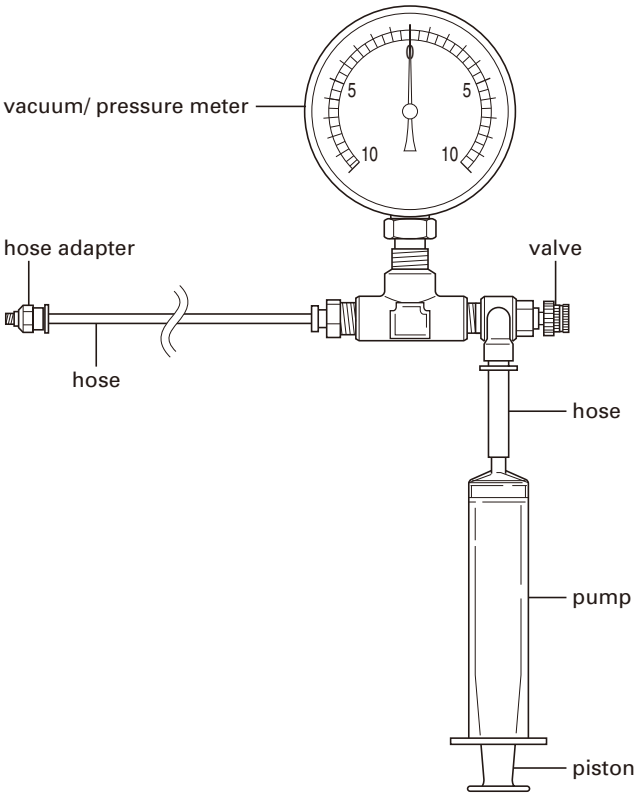

Note:
0 point adjustment of the meter needle can be done by turning the screw on the rear of the meter.

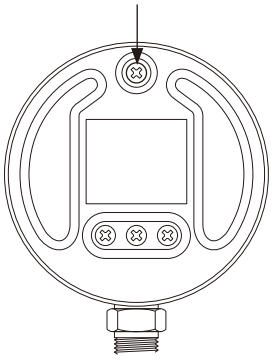

■ Water Resistance Confirmation

1) Install the universal connector cap over the universal connector.
2) Remove the water-resistant sheet (G11-4331-04) and black sheet (G11-4440-04) attached to the right side of the rear of the chassis using a pair of tweezers ①. This water-resistant sheet allows air to pass, but not water.
   Note:
   Take sufficient care to prevent damage to the surface of the chassis when removing the water-resistant sheet.

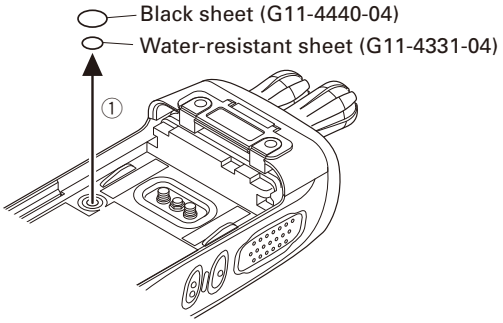

3) There is a screw hole under the water-resistant sheet. Insert the hose adapter into this screw hole while turning it ②.
4) Insert the water-resistant inspection jig hose into the hose adapter ③.
   Note:
   The piston of the water-resistant inspection jig pump must be pushed in to the end.

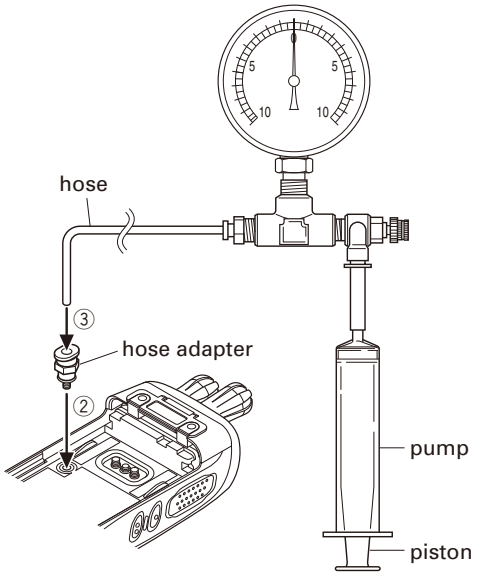

5) Turn and open the valve on the side of the pump of the water-resistant inspection jig, then pull the pump piston to reduce the pressure in the transceiver. Pull the piston until the meter needle of the water-resistant inspection jig indicates 10kPa (left side of meter). If the meter needle does not reach 10kPa when the piston is pulled to the end, perform the following steps.
   a) Close the valve on the side of the pump.
   b) Remove the pump from the hose.
   c) Push the piston of the removed pump to the end.
   d) Insert the pump into the hose.
   e) Open the valve and pull the pump piston.
   Repeat steps a) to e) until the meter needle indicates 10kPa (left side of meter). Disassemble and reassemble the transceiver when you do not reach 10kPa even if the step from a) to e) is repeated three times.

DISASSEMBLY FOR REPAIR

Note:
Do not push the piston with the pump inserted in the hose because the meter needle of the water-resistant inspection jig will break with excessive pressure.

6) When the meter needle reaches 10kPa (left side of meter), close the valve on the side of the pump and observe the movement of the meter needle.
   If the change of the meter needle is within one scale (0.2kPa) in 30 seconds, the transceiver will retain normal water resistance.
   It is not necessary to perform the "Leakage Location Identification" test on page 15 under these conditions.
   If the change of the meter needle is more than one scale (0.2kPa), water resistance is not adequate. Perform the "Leakage Location Identification" procedure on page 15.
   Note:
   If the valve is not closed, the pump piston is drawn by the negative pressure of the transceiver and the meter needle will move unexpectedly. Be sure to close the valve, before beginning the observation.

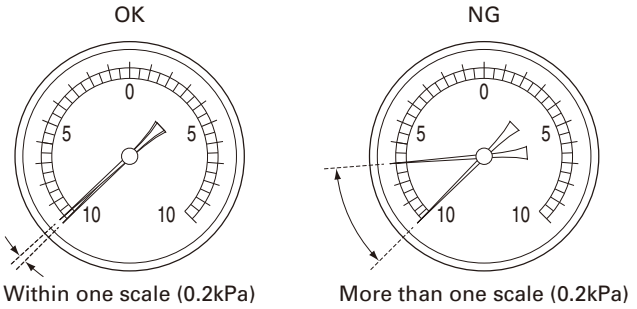

7) If water resistance retention is confirmed, press the black part of the hose adapter and remove the hose. Then turn the hose adapter and remove it from the chassis.

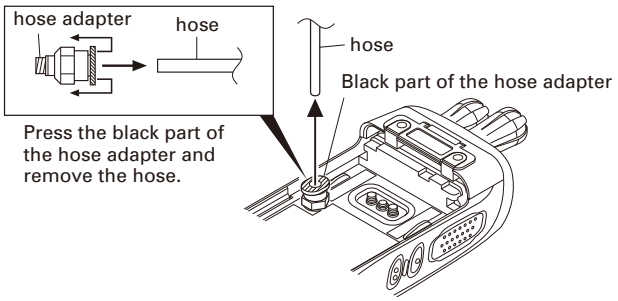

8) Perform the "Attaching the water-resistant sheet and black sheet" on page 16.

■ Leakage Location Identification

If step 6 of "Water Resistance Confirmation" on page 15 fails, perform this procedure.

1) Prepare for a container that can contain the transceiver sufficiently and put water to a height of approximately 20 cm (7.87 inch) from the bottom of the container. The water temperature must be between 10ºC (50ºF) and 30ºC (86ºF).
2) Open the valve on the side of the pump, push the pump piston and increase the inside pressure of the transceiver to approximately 10kPa (right side of meter). If the meter needle does not reach 10kPa when the piston is pushed in to the end, perform the following steps.
   a) Close the valve on the side of the pump.
   b) Remove the pump from the hose.
   c) Pull the piston of the removed pump to the end.
   d) Insert the pump into the hose.
   e) Open the valve and push the pump piston.
   Repeat steps a) to e) until the meter needle indicates approximately 10kPa (right side of meter).
   Disassemble and reassembly the transceiver when you do not reach approximately 10kPa even if the step from a) to e) is repeated three times.
3) Wait for one minute after the meter needle reaches approximately 10kPa. Go to the next step if the meter needle indicates 5kPa or more. Disassemble and reassemble the transceiver if the meter needle indicates 5kPa or less.
4) Carefully place the transceiver into the water while the inside of the transceiver is pressurized.

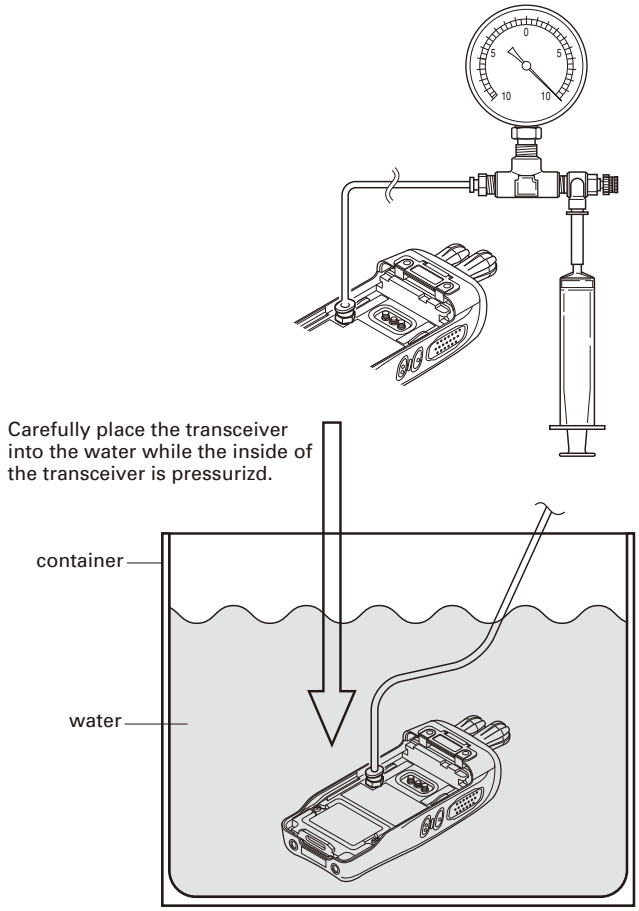

DISASSEMBLY FOR REPAIR

The meter needle will move down gradually due to air leakage. Place the transceiver into the water before it reaches 5kPa.
Air leakage can be confirmed by air bubbles. When the meter needle indicates 3 to 4kPa (right side of meter), perform steps a) to e) in 3) above to increase the pressure to approximately 10kPa.
Note:
If the transceiver is left under water when the meter needle is 0kPa, water may be leaked inside the transceiver. Take the transceiver out of the water before the meter needle reaches 3kPa. Because the meter needle indicates 3kPa or more, pressurized air in the transceiver is released in water as bubbles, so water cannot leaked inside the transceiver.

5) Observe the transceiver while it is under water, while paying attention to the meter needle value.
With the transceiver under water, air leaks if air bubbles are produced continuously.
If air bubbles are not produced continuously, it is not a leakage location.
Note:
If air bubbles come out of the speaker grill and are not continuous, they are air that is collected in the front of the speaker and do not indicate a leakage location.
6) Identify the component from which continuous air bubbles are released.
7) Remove the transceiver from the water, wipe off the water and dry it completely.
Shake the transceiver to remove excess water from the microphone and speaker grill.
Sound may be muffled or distorted if water remains in the microphone and speaker grill.
Wipe off the battery terminal on the rear of the chassis.
Note:
Take special care because water collected between the transceiver case and chassis may be leaked inside the transceiver during disassembly and damage the transceiver components.
8) After the transceiver is dried completely, replace the components with the leakage location identified while paying attention to foreign matters.
Refer to page 17 for parts concerning the waterproof of each leakage location.
9) Perform the "Water Resistance Confirmation" on page 14 after reassembly.

■ Attaching the water-resistant sheet and black sheet

Attach a new water-resistant sheet to the screw hole on the rear of the chassis, then attach a new black sheet onto the water-resistant sheet.
Note:
- Remove any adhesive trace from the location where the water-resistant sheet and black sheet of the chassis is attached before attaching a new water-resistant sheet and black sheet to the screw hole.
- Attach the water-resistant sheet and black sheet to the chassis firmly; failure to do so may allow water to pass into the transceiver.

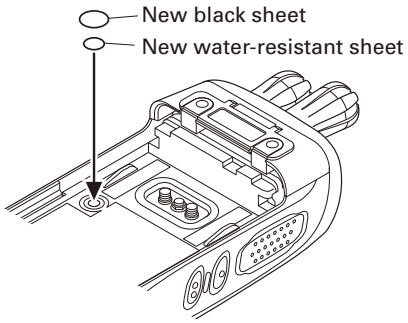

■ After repairing and reassembling

After repairing and reassembling, apply bond to the top of the left side screw for the chassis and between the chassis and the left side screw for the option board cover.
Note:
- Take care that the bond does not protrude above the chassis surface. (Take care that the bond does not come into contact with the battery.)
- Use a silicon based bond.

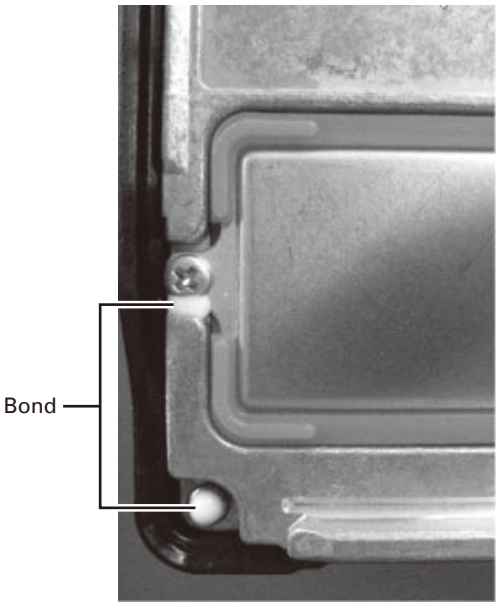

DISASSEMBLY FOR REPAIR

■ Parts list concerning the waterproof of each leakage location

LCD Display, Front Key, Speaker,
The space of the Front panel and the chassis

Part Name	Part Number
PLASTIC CABINET (6-key)	A02-4002-23
PLASTIC CABINET (18-key)	A02-4003-23
PACKING (6-key)	G53-1765-11
PACKING (18-key)	G53-1766-11
HOLDER (FG-SP)	J19-5505-11
SHEET (SP)	G11-4458-14

ANT, Volume Knob, Selector Knob,
The space of the TOP panel and the chassis

Part Name	Part Number
PACKING (TOP)	G53-1762-02
ILLUMINATION GUIDE (TX/BUSY)	B11-1855-04
PANEL (TOP)	A62-1156-02
Double-sided adhesive tape (AUX)	J99-0728-04
Double-sided adhesive tape (VOL/CH)	J99-0727-04
PACKING (VOL,CH O-RING)	G53-1768-04
PAKCING (SMA O-RING)	G53-1792-04
TERMINAL ASSY (SMA)	X60-3860-10
VARIABLE RESISTOR (VOL)	R31-0666-05
ROTARY SWITCH (CH)	S60-0437-05
CIRCULAR NUT (VOL,CH)	N14-0844-04

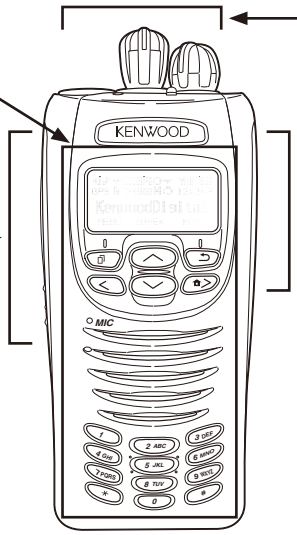

Universal Connector

Part Name	Part Number
RECTANGULAR RECEPTACLE (SP/MIC)	E58-0532-05
FPC (LEAD FREE/UNIVERSAL)	J87-0007-05

PTT Switch, Side1/ 2 Key

Part Name	Part Number
SHEET (PTT)	G11-4428-04

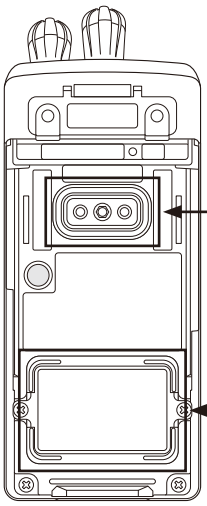

Battery Terminal

Part Name	Part Number
PACKING (TERMINAL BLOCK)	G53-1763-03
TERMINAL BLOCK	E72-0425-03
ADHESIVE SHEET (TERMINAL BLOCK)	J99-0725-04
CUSHION (BATT-)	G13-2265-04

Option Board Cover

Part Name	Part Number
PACKING (OP BOARD COVER)	G53-1764-03
ADHESIVE SHEET (OP BOARD COVER)	J99-0732-04

CIRCUIT DESCRIPTION

1. Overview

The NX-200 is a VHF portable transceiver designed to operate in the frequency range of 136 to 174MHz. The unit consists of receiver, transmitter, phase-locked loop (PLL) frequency synthesizer, base band parts, power supply, and control circuits.

2. Frequency Configuration

The receiver is a double-conversion superheterodyne using the first intermediate frequency (IF) of 58.05MHz and the second IF of 450kHz. Incoming signals from the antenna are mixed with the local signal from the PLL circuit to produce the first IF of 58.05MHz. This is then mixed with the 57.6MHz second local oscillator output to produce the 450kHz second IF. The transmit signal frequency is generated by the PLL VCO, and modulated by the signal from the DSP. It is then amplified and fed to the antenna.

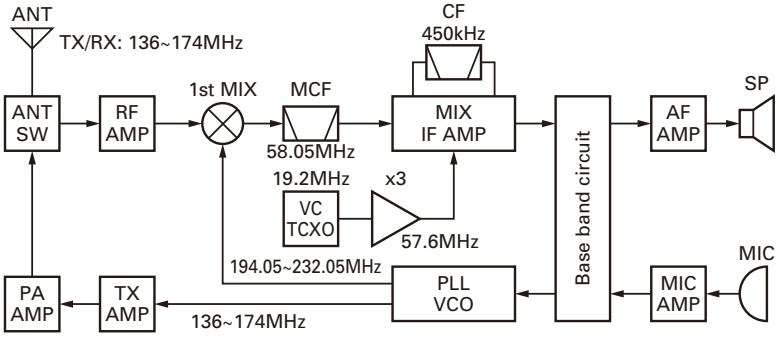

Fig. 1 Frequency configuration

3. Receiver System

3-1. RF Circuit

An incoming RF signal from the antenna terminal is passed through the antenna switch (D104, D105, D209 and D211) and then the bandpass filter (L220, L224). The bandpass filter is adjusted by a variable capacitor. The input voltage to the variable capacitor is regulated by the voltage output from the D/A converter (IC703). The signal is amplified by an RF amplifier (Q204), and passed through the bandpass filter (L212, L215). The resulting signal is applied to the first mixer (Q203), where it is mixed with the first local oscillator signal output from the frequency synthesizer to produce the first IF (58.05MHz).

3-2. IF Circuit

The first IF signal is passed through a four-pole monolithic crystal filter (XF200) to reject adjacent channel signals. The filtered first IF signal is amplified by the first IF amplifier (Q202) and then applied to the IF system IC (IC202). The IF system IC provides a second mixer, AGC amplifier, and RSSI (Received Signal Strength Indicator).

The second mixer mixes the first IF signal with the 57.6MHz of second local oscillator output and produces the second IF signal of 450kHz.

The second IF signal is passed through the ceramic filter (CF200) to reject the adjacent channel signal. The filtered second IF signal is amplified by the AGC amplifier.

The signal from the AGC amplifier is input to the ASIC (IC108) through the ceramic filter (CF201) and operational amplifier (IC203).

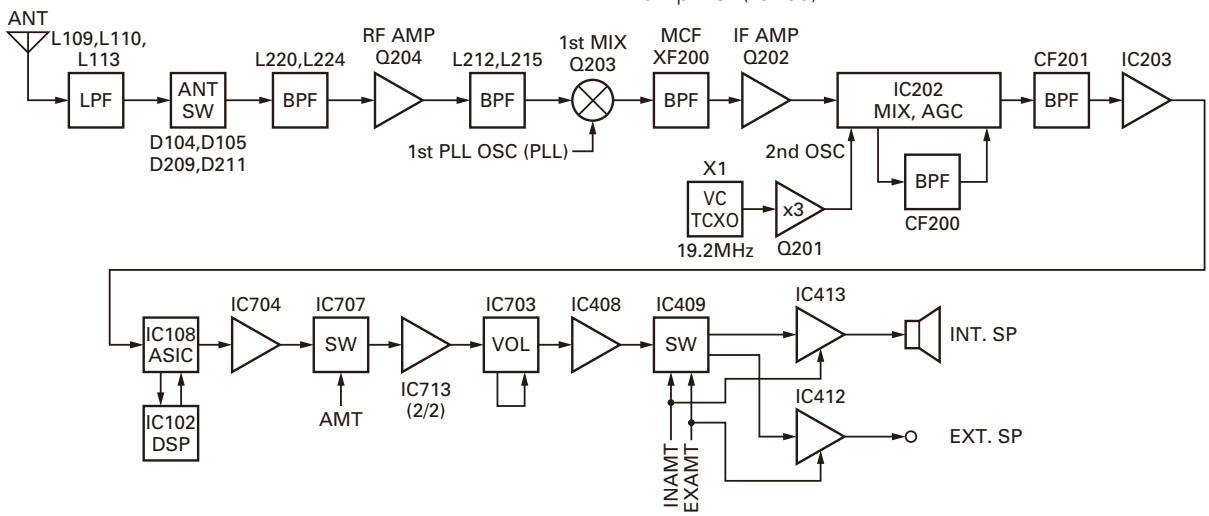

Fig. 2 RF and IF circuit

CIRCUIT DESCRIPTION

3-3. Audio Amplifier Circuit

Audio processing (high-pass filter, low-pass filter, de-emphasized and so on) at FM mode and decoding at NXDN mode are processed by DSP. The audio signal from IC108 and IC102 goes through the amplifier (IC704). The signal then goes through a mute switch (IC707), amplifier (IC713), electronic volume control (IC703), and AF amplifier (IC408).

While busy, AMT becomes Low to turn IC707 on, and the signal is fed to the AF switch. While INAMT is High, the AF switch (IC409) selects the internal speaker, and the audio signal is fed to the internal audio power amplifier (IC413), and output to the internal speaker. While EXAMT is High, the AF switch (IC409) selects the external speaker, and the audio signal is fed to the external audio power amplifier (IC412), and output to the external speaker. The power supply for IC413 and IC412 is turned on while INAMT or EXAMT is High.

The speaker is switched by the logic of the speaker switching terminal SSW on the universal connector. When the SP-MIC is not attached, SSW becomes High. IC108 detects the logic of SSW and activates either INAMT or EXAMT.

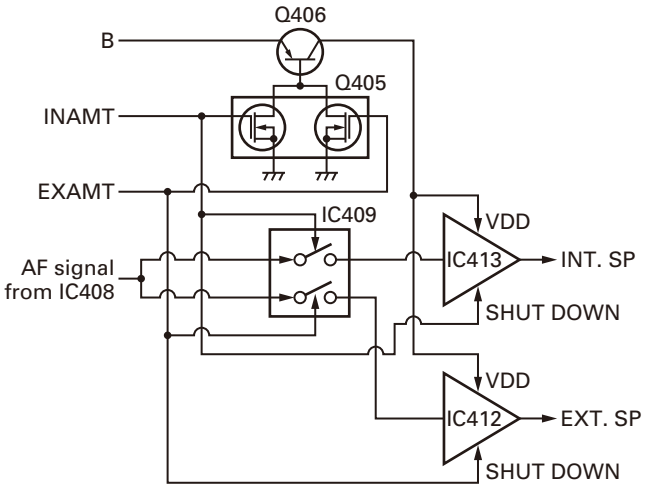

Fig. 3 Audio amplifier circuit

3-4. Squelch Circuit

It amplifies the demodulated noise signal from IC108 after filtering through the BPF circuit. Then, the amplified signal is converted to a DC signal by the detection circuit. The converted signal is fed back to IC108.

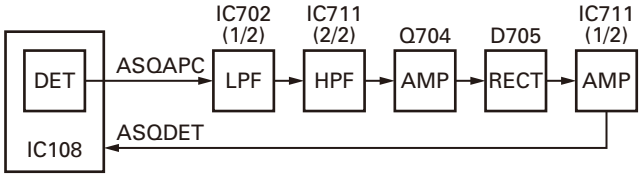

Fig. 4 Squelch circuit

4. Transmitter System

4-1. Audio Band Circuit

The signal from the internal microphone goes through the mute switch (Q5). When the SP-MIC is not attached, the microphone switching terminal (MSW) on the universal connector becomes High, and the mute switch (Q5) is turned on. When the SP-MIC is attached, MSW is connected to GND inside the SP-MIC. For this reason, Q5 is turned off, the internal microphone is muted, and only the input of the external microphone is supplied to the microphone amplifier. The signal from the microphone goes through the mute switch (Q707), and is amplified by IC716 (1/2) and limited by the AGC circuit which is composed of D703, D704, Q705 and Q706.

4-2. Base Band Circuit

The audio signal output from the base band circuit is converted to digital data with a sampling frequency of 48kHz. This digital data is sent to the DSP (IC102), and voice signals of 300Hz or lower and frequencies of 3kHz or higher are cut off and an audio range of 300Hz to 3kHz is extracted. The audio signal is then pre-emphasized in FM mode and synthesized with the signals, such as QT and DQT, as required, and is then output from IC108. In Digital mode, the audio signal is converted to the 4-Level FSK base band signal and output from IC108. The DTMF and MSK base band signals are also generated by the DSP and output by IC108.

LPF (IC705) works as a smoothing filter. The DAC (IC703) assigns the base band signal to the VCO and VCTCXO (X1). At this time, the level output according to the transmit carrier is fine-adjusted according to each modulation method.

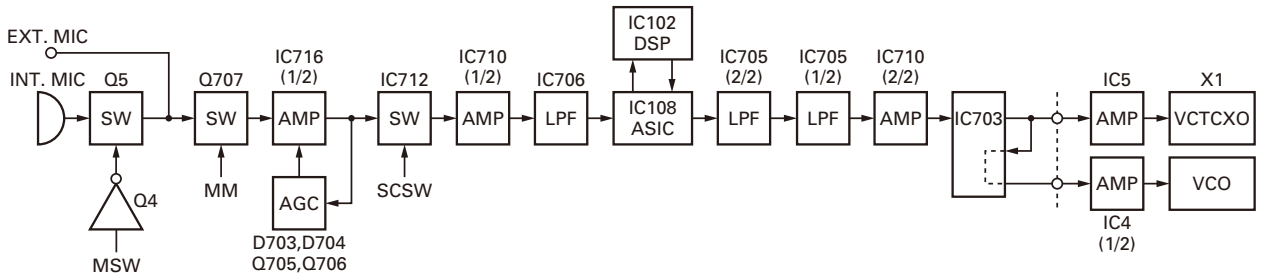

Fig. 5 Audio band and Base band circuit

CIRCUIT DESCRIPTION

4-3. VOX

IC716 (2/2) amplifies the audio signal captured in the microphone. The signal is then converted into the DC voltage, rectified by D706. The DC voltage activates the ASIC (IC108), and the VOX starts.

4-4. Drive and Final Amplifier

The signal from the T/R switch (D100 is on) is amplified by the drive amplifier (Q102 and Q103) to 25~27dBm. The output of the drive amplifier is amplified by the RF power amplifier (Q106) to 5.0W (1W when the power is low). The RF power amplifier is MOS FET. The output of the RF power amplifier is then passed through the harmonic filter (LPF) and antenna switch (D104, D105 are on) and applied to the antenna terminal.

4-5. APC Circuit

The APC circuit always monitors the current flowing through the RF power amplifier (Q106) and keeps a constant current. The voltage drop at R136, R138 and R141 is caused by the current flowing through the RF power amplifier and this voltage is applied to the differential amplifier (IC100 1/2). IC100 (2/2) compares the output voltage of IC100 (1/2) with the reference voltage from IC108, and the output of IC100 (2/2) controls the VGG of Q102, Q103 and Q106 to make the both voltages the same. The change of power high/low is carried out by the change of the reference voltage. Q105, Q107 and Q110 are turned on and Q104 and Q109 are turned off in transmit and the APC circuit is active.

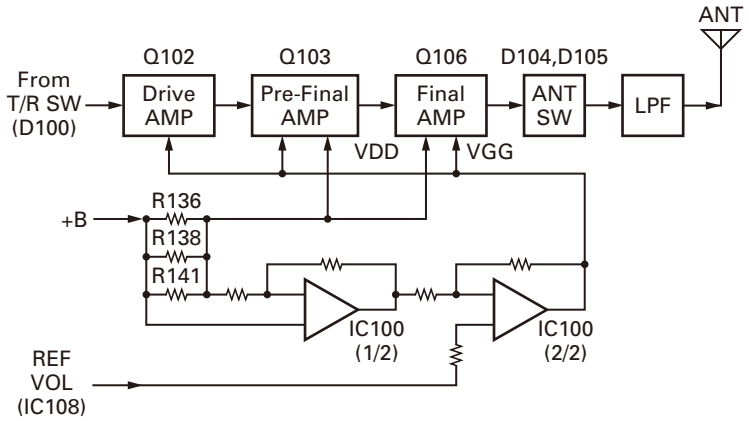

Fig. 6 Drive and final amplifier and APC circuit

5. PLL Frequency Synthesizer

5-1. VCTCXO (X1)

VCTCXO (X1) generates a reference frequency of 19.2MHz for the PLL frequency synthesizer. This reference frequency is applied to pin 9 of the PLL IC (IC3) and is connected to the IF circuit as a 2nd local signal through the Tripler (Q201). The VCTCXO oscillation frequency is determined by the DC voltage of the VC terminal. The VC voltage is fixed to 1.65V by R59 and R60, and supplied to the VC terminal through IC5. The modulation signal is also fed to VC terminal through IC5.

The frequency adjustment is achieved by switching the ratio of dividing frequency that is not adjusted by the DC voltage impressed to VC. The resolution of the adjusting frequency is approximately 8Hz. Because twice the VCO output are input for the input frequency of PLL IC, the sending and receiving frequency can be adjusted by approximately 4Hz resolution.

5-2. VCO

There is a RX VCO and a TX VCO.

The TX VCO (Q10) generates a transmit carrier and the RX VCO (Q8) generates a 1st local signal. For the VCO oscillation frequency, the transmit carrier is 136 to 174 MHz and the 1st local receive signal is 194.05 to 232.05MHz.

The VCO oscillation frequency is determined by one system of operation switching terminal “T/R” and two systems of voltage control terminals “CV” and “ASSIST”.

The operation switching terminal, “T/R”, is controlled by the control line (/T_R) output from the ASIC (IC108). When the /T_R logic is low, the VCO outputs the transmit carrier and when it is high, it outputs a 1st local receive signal.

The voltage control terminals, “CV” and “ASSIST”, are controlled by the PLL IC (IC3) and ASIC (IC108) and the output frequency changes continuously according to the applied voltage. For the modulation input terminal, “VCO_MOD”, the output frequency changes according to the applied voltage. This is used to modulate the VCO output. “VCO_MOD” works only when “/T_R” is low.

CIRCUIT DESCRIPTION

5-3. PLL IC (IC3)

The PLL IC compares the differences in phases of the VCO oscillation frequency and the VCTCXO reference frequency, returns the difference to the VCO CV terminal and realizes the "Phase Locked Loop" for the return control. This allows the VCO oscillation frequency to accurately match (lock) the desired frequency.

When the frequency is controlled by the PLL, the frequency convergence time increases as the frequency difference increases when the set frequency is changed. To supplement this, the ASIC is used before control by the PLL IC to bring the VCO oscillation frequency close to the desired frequency. As a result, the VCO CV voltage does not change and is always stable at approximately 2.5V.

The desired frequency is set for the PLL IC by the ASIC (IC108) through the 3-line "SDO1", "SCK1", "/PCS_RF" serial bus. Whether the PLL IC is locked or not is monitored by the ASIC through the "PLD" signal line. If the VCO is not the desired frequency (unlock), the "PLD" logic is low.

5-4. Doubler (Q4)

The doubler (Q4) extracts the twice harmonic component from the signal from the VCO. This twice harmonic components is then fed into PLL (IC3) through band pass filter.

Band pass filter is consists of two filter. One is for TX (L3,L5,L7) and pass band is 272.0 to 348.0MHz. The other is for RX 1st local (L2,L6,L30) and pass band is 388.1 to 464.1MHz.

5-5. Local Switch (D100, D201)

The connection destination of the signal output from the buffer amplifier (Q100) is changed with the diode switch (D100) that is controlled by the transmission power supply, 50T, and the diode switch (D201) that is controlled by the receive power supply, 50R. If the 50T logic is high, it is connected to a send-side pre-drive (Q102). If the 50T logic is low, it is connected to a receive-side mixer (Q203).

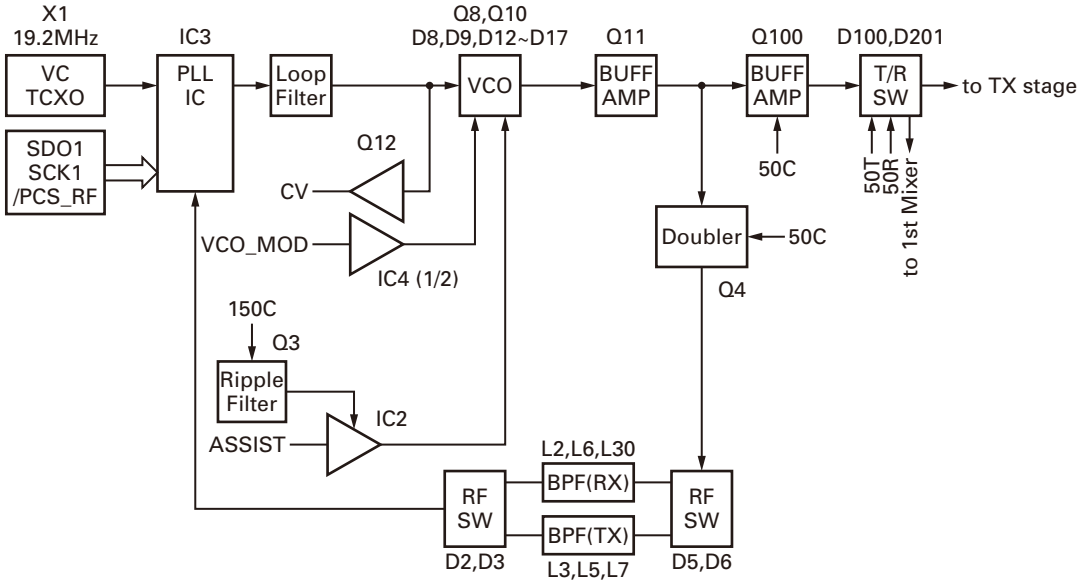

Fig. 7 PLL block diagram

6. Control Circuit

The control circuit consists of the ASIC (IC108) and its peripheral circuits. IC108 mainly performs the following;

1) Switching between transmission and reception by PTT signal input.
2) Reading system, zone, frequency, and program data from the memory circuit.
3) Sending frequency program data to the PLL.
4) Controlling squelch on/off by the DC voltage from the squelch circuit.
5) Controlling the audio mute circuit by decode data input.

6-1. ASIC

The ASIC (IC108) is a 32-bit RISC processor, equipped with peripheral function and ADC/DAC.

This ASIC operates at 18.432MHz clock and 3.3V /1.5V DC. It controls the flash memory, SRAM, DSP, the receive circuit, the transmitter circuit, the control circuit, and the display circuit and transfers data to or from an external device.

CIRCUIT DESCRIPTION

6-2. Memory Circuit

The memory circuit consists of the ASIC (IC108) and the SRAM (IC103) and flash memory (IC101). The flash memory has capacity of 32M-bit that contains the transceiver control program for the ASIC and stores the data. It also stores the data for transceiver channels and operating parameter that are written by the FPU. This program can be easily written from external devices. The SRAM has capacity of 1M-bit that contains work area and data area.

■ Flash memory

Note: The flash memory stores the data that is written by the FPU (KPG-111D), tuning data (Deviation, Squelch, etc.) ,and firmware program (User mode, Test mode, Tuning mode, etc.). This data must be rewritten when replacing the flash memory.

■ SRAM (Static memory)

Note: The SRAM has temporary data area and work area. When the power supply is off, it is backed up by an internal secondary lithium battery. Therefore, the saved data is not lost.

■ Real-time clock

The clock function is based on real-time clock IC (IC106). When the power supply is off, it is backed up by an internal secondary lithium battery.

6-3. LCD

The LCD is controlled using the bus lines on the connector (CN1) of the Control unit (X53-426). It corrects the LCD contrast voltage using IC1.

6-4. Key Detection Circuit

Keys are detected using the key scan circuit in IC108. The /KEYI signals that are normally pulled down go high when any key is pressed.

6-5. Low Battery Warning

The battery voltage is divided using R444 and R445 and is detected by the ASIC (IC108). When the battery voltage falls below the voltage set by the Low battery warning adjustment, the red LED blinks to notify the operator that it is time to replace the battery. If the battery voltage falls even more (approx. 5.8V), a beep sounds and transmission stops.

Low battery warning	Battery condition
The red LED blinks during transmission.	The battery voltage is low but the transceiver is still usable.
The red LED blinks and the warning tone beeps while the PTT switch is pressed.	The battery voltage is low and the transceiver is not usable to make calls.

6-6. DSP

The DSP circuit consists of a DSP (IC102) and processes the base band signal. The DSP operates on an external clock of 18.432MHz (the same as the IC108), the I/O section operates at 3.3V and the core section operates at 1.5V. The DSP carries out the following processes:

- 4 Level FSK processing
- Analog FM pre-emphasis/de-emphasis
- Vocoder processing between audio codec and modulation/demodulation
- CAI processing, such as error correction encoding
- QT/DQT encoding/decoding
- LTR encoding/decoding
- DTMF encoding/decoding
- MSK encoding/decoding
- 2-tone encoding/decoding
- Compressor/expander processing
- Voice scrambler processing
- Transmit/receive audio filtering processing
- Microphone amplifier AGC processing
- Audio mute processing
- Modulation level processing

7. Power Supply Circuit

The battery voltage (+B) is provided from the battery terminal on the TX/RX unit (X57). The battery voltage passes through the 2.5A fuse (F400), and goes to the RF final amplifier, AVR ICs (IC400, IC403), and Control unit (X53-426).

In the control unit, +B is connected to the DC/DC (IC407), AVR ICs (IC411, IC708, IC416), and voltage detector IC (IC414). The voltage detector watches the battery voltage. If the battery voltage is 5.6V or higher, the detector outputs High. While the output of IC414 is High, IC416 and Q409 provide 3.1V (31BU) to the backup-section.

When the VOL SW is turned on, SB1 becomes high (battery voltage). The DC/DC (IC407) operates if both SB1 and the output of the detector are high. IC407 outputs 3.8V and it activates IC404 (33M), IC717 (15M), and IC406 (33A). As a result, the ASIC and DSP operate.

The SBC signal becomes High after the ASIC operates, IC708 (5A), Q403 on the Control unit (SB2) and Q403 on the TX-RX unit (SB3) are turned on. IC402 and IC403 operate by turning on these AVR ICs and FET switches.

The 5UC signal becomes High when an option is installed on the universal connector. Then IC411 (50U) operates.

When the /SAVE signal becomes High, IC400 (50C) operates. The output of IC400 is connected to three FET switches (Q401, Q402, Q405). When the SBC signal becomes High, IC403 (33C) operates. The FET switches are controlled by the ASIC. Q405 (50T) is turned on in transmit mode. Q401 (50R) and Q402 (50IF) are turned on in receive mode.

When the VOL SW is turned off, the /PSW signal becomes Low. After detecting the /PSW signal, the ASIC changes the SBC signal to Low. Then the power supplies except IC416 (31BU) stop.

CIRCUIT DESCRIPTION

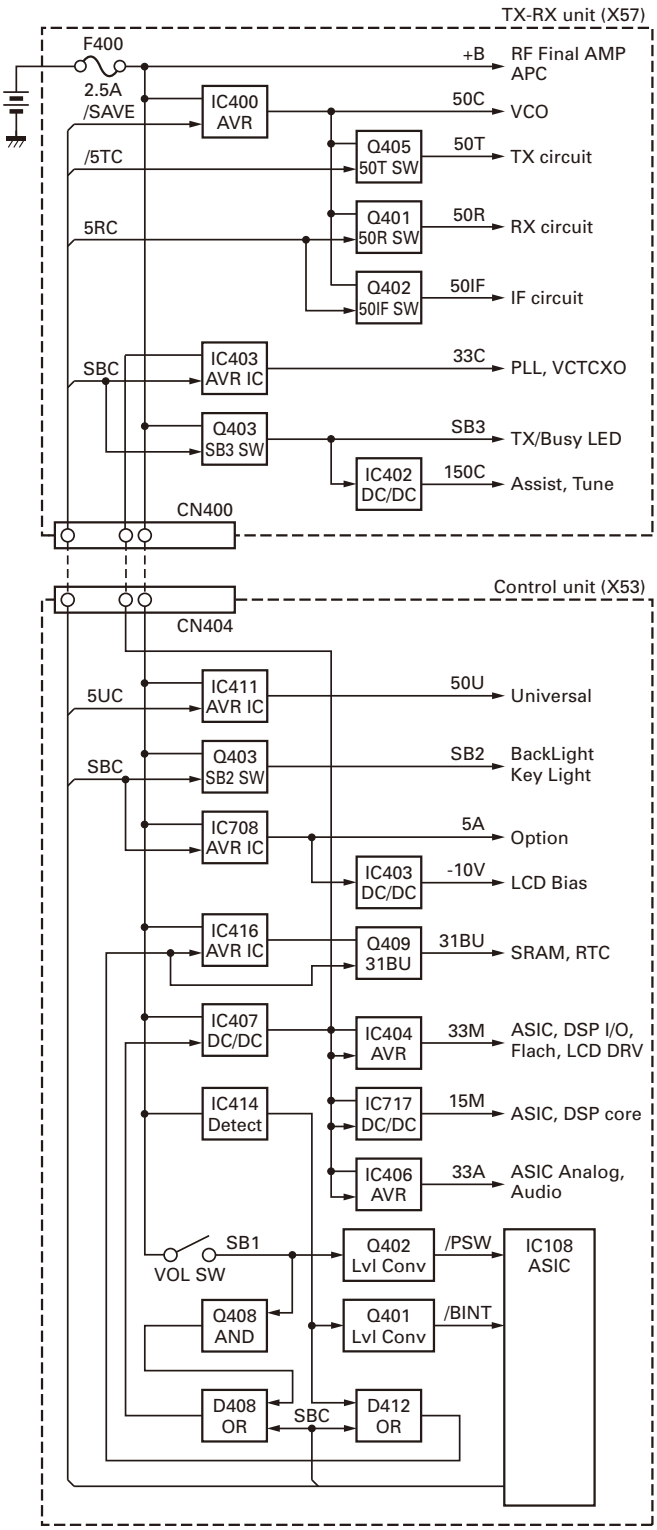

Fig. 8 Power supply circuit

8. Signaling Circuit

8-1. Encode (QT/DQT/LTR/DTMF/2-tone/MSK)

Each signaling data signal of QT, DQT, LTR, DTMF, 2-tone and MSK is generated by the DSP circuit, superposed on a modulation signal and output from IC108. The modulation balance of the QT/DQT/LTR signal is adjusted by the D/A converter(IC703) and the resulting signal is routed to the modulation input of the VCO and VCXO (X1). Each deviation of the TX QT, DQT, LTR, DTMF, 2-tone and MSK tone is adjusted by changing the output level of IC108 and the resulting signal is routed to the VCO and VCXO. The RX DTMF tone is routed to the receive audio signal system, and is output from the speaker.

8-2. Decode (QT/DQT/LTR/DTMF/2-tone/MSK)

The audio signal is removed from the FM detection signal sent to the DSP circuit and the resulting signal is decoded.

9. Compander Circuit

The term "compander" means compressor and expander. The compander reduces noise by utilizing a compressor and an expander. The transceiver contains a DSP (IC102) to perform this operation. The transceiver compander can be turned on or off using the FPU.

COMPONENTS DESCRIPTION

Control unit (X53-4260-XX)

Ref. No.	Part Name	Description
IC1	IC	LCD contrast
IC101	IC	FLASH ROM
IC102	IC	DSP
IC103	IC	SRAM
IC104	IC	2 input AND gate
IC105	IC	Reset
IC106	IC	RTC
IC107	IC	Buffer
IC108	IC	ASIC
IC109	IC	2 input AND gate
IC401,402	IC	Bus switch
IC403	IC	Voltage doubling inverter
IC404	IC	Voltage regulator (33M)
IC406	IC	Voltage regulator (33A)
IC407	IC	DC/DC converter
IC408	IC	AF AMP
IC409	IC	AF switch
IC411	IC	Voltage regulator (50U)
IC412,413	IC	Audio AMP
IC414	IC	Reset
IC415	IC	2 input AND gate
IC416	IC	Voltage regulator
IC417,418	IC	Dual bus buffer
IC701	IC	I/O control
IC702	IC	APC LPF
IC703	IC	D/A converter
IC704	IC	RX AF LPF
IC705	IC	Modulation LPF
IC706	IC	MIC AMP
IC707	IC	RX AF switch
IC708	IC	Voltage regulator (5A)
IC709	IC	Sidetone mute
IC710	IC	MOD/MIC summing AMP
IC711	IC	SQL BPF/SQL DC AMP
IC712	IC	MIC switch
IC713	IC	1.65V REF/RX summing AMP
IC714	IC	OPT switch
IC715,716	IC	VOX AMP
IC717	IC	DC/DC converter (15M)
Q1,2	Transistor	LCD backlight switch
Q3	FET	LCD backlight switch
Q4	FET	MIC mute control
Q5	FET	MIC mute switch
Q101,102	Transistor	12key backlight switch

Ref. No.	Part Name	Description
Q103	FET	12key backlight switch
Q401,402	FET	Level converter
Q403	Transistor	SB2 switch
Q404	FET	SB2 switch control
Q405	FET	AF AMP switch
Q406,407	Transistor	Voltage regulator (AF AMP)
Q408,409	Transistor	DC switch
Q410	FET	DC switch
Q411	FET	Level converter
Q412	FET	DC switch control
Q413~415	Transistor	DC switch
Q701	Transistor	OPT switch
Q702	FET	Tone switch
Q703	FET	W/N noise switch
Q704	Transistor	SQL noise AMP
Q705,706	Transistor	MIC AGC
Q707	FET	MIC mute
D1,2	LED	12key backlight
D3,4	LED	LCD backlight
D5,6	LED	12key backlight
D7,8	LED	LCD backlight
D9,10	LED	12key backlight
D11	Diode	LCD backlight switch
D12~16	Diode	Reverse current prevention
D17~21	Zener diode	Surge absorption
D22,23	Diode	Surge absorption
D101	Diode	12key backlight switch
D102	Diode	Reverse current prevention
D401~404	Diode	12key control
D405,406	Diode	DC/DC converter
D407	Diode	Over voltage prevention
D408	Diode	DC/DC converter control
D409,410	Diode	SP control
D411	Diode	RTC BATT control
D412	Diode	DC switch control
D413	Diode	RTC BATT control
D414,415	Diode	Reverse current prevention
D416	Diode	33M control
D417	Diode	33A control
D701	Diode	5A switch
D702	Diode	PLD control
D703,704	Diode	Detector
D705	Diode	Noise detector
D706	Diode	VOX detector
D707	Diode	VOX

COMPONENTS DESCRIPTION

TX-RX unit (X57-7360-10)

Ref. No.	Part Name	Description
IC1	IC	Temperature sensor
IC2	IC	AF AMP for VCO tune
IC3	IC	PLL IC
IC4	IC	OP AMP (VCO MOD/APC)
IC5	IC	DC AMP for TCXO MOD
IC100	IC	Auto power control
IC200,201	IC	DC AMP for BPF
IC202	IC	FM IC
IC203	IC	Buffer
IC400	IC	Voltage regulator (50C)
IC401	IC	50T control
IC402	IC	DC/DC converter
IC403	IC	Voltage regulator (33C)
IC404	IC	OP AMP (RSSI/VAGC)
Q1,2	Transistor	Buffer AMP switch
Q3	Transistor	Ripple filter
Q4	Transistor	Buffer AMP
Q6	Transistor	Ripple filter
Q7	FET	T/R switch
Q8,10	FET	VCO oscillation
Q9	FET	T/R switch
Q11	Transistor	Buffer AMP
Q12	FET	Buffer AMP
Q13	FET	Buffer AMP switch
Q100	Transistor	Buffer AMP
Q102	FET	Drive AMP
Q103	FET	Pre-final AMP
Q104,105	Transistor	APC switch
Q106	FET	RF final AMP
Q107,109	FET	APC switch
Q110	Transistor	APC switch
Q201	Transistor	2nd Local tripler

Ref. No.	Part Name	Description
Q202	Transistor	IF AMP
Q203	FET	Mixer
Q204	FET	RF AMP
Q401	FET	50R switch
Q402	FET	50IF switch
Q403	FET	SB3 switch
Q404	FET	DC/DC converter switch
Q405	Transistor	50T switch
Q406	Transistor	TX/RX LED switch
D1	Diode	Ripple filter
D2,3	Diode	fin RF switch
D4	Diode	Bypass diode
D5,6	Diode	fin RF switch
D7	Diode	Ripple filter
D8,9 D12~17	Variable capacitance diode	Frequency control
D18	Variable capacitance diode	TX modulation
D100	Diode	Local switch
D103	Zener diode	APC switch
D104,105	Diode	Antenna switch
D106	Zener diode	APC protect
D201	Diode	Local switch
D204,205, D207,208	Variable capacitance diode	Vari-cap tune
D209	Diode	Antenna switch
D211	Diode	Antenna switch
D213	Diode	Reverse protection
D400	Diode	Reverse protection
D401	Diode	50T control
D402	LED	TX/RX LED
D403	Diode	Reverse protection

NX-200

PARTS LIST

✻ New Parts. ⚠indicates safety critical components.
Parts without **Parts No.** are not supplied.
Les articles non mentionnes dans le **Parts No.** ne sont pas fournis.
Teile ohne **Parts No.** werden nicht geliefert.

L : Scandinavia **K** : USA **P** : Canada
Y : PX (Far East, Hawaii) **T** : England **E** : Europe
Y : AAFES (Europe) **X** : Australia **M** : Other Areas

NX-200 (Y50-6112-XX)
CONTROL UNIT (X53-4260-XX)

Ref. No.	Address	New parts	Parts No.	Description	Destination
NX-200					
1	1B		A02-4002-23	PLASTIC CABINET (6KEY)	E3
2	1A		A02-4003-23	PLASTIC CABINET (18KEY)	E
3	3A	✻	A10-4127-01	CHASSIS	
4	2B		A62-1156-02	PANEL (TOP)	
6	1B,1D		B09-0712-03	CAP ACCESSORY	
7	1A		B11-1853-24	FILTER (LCD)	
8	1A		B11-1854-02	ILLUMINATION GUIDE (LCD)	
9	3B		B11-1855-04	ILLUMINATION GUIDE (TX/BUSY)	
10	1A		B38-0923-05	LCD ASSY	
12	1A		B42-7296-04	STICKER	
13	1B		B43-1606-04	BADGE	
14	2D	✻	B62-2117-00	INSTRUCTION MANUAL	
15	2C	✻	B62-2153-00	INSTRUCTION MANUAL	
17	2B		D32-0446-14	STOPPER (16CH)	
19	2A		E29-1220-04	RELAY HARDWARE (VCO-PCB)	
20	3A		E29-1221-14	RELAY HARDWARE (VCO-CHASSIS)	
21	3B		E58-0532-05	RECTANGULAR RECEPTACLE (SP/MIC)	
22	3B		E72-0425-03	TERMINAL BLOCK	
24	3A		F07-1931-04	COVER (OP BOARD)	
27	2A		G02-1836-13	EARTH SPRING (SP)	
28	1A		G10-1373-04	FIBROUS SHEET (SP)	
29	2B		G10-1384-14	FIBROUS SHEET (TOP PANEL)	
30	2A		G11-4272-14	RUBBER CUSHION (SP)	
31	3A		G11-4331-04	SHEET (AIR)	
33	2A		G11-4428-04	SHEET (PTT)	
34	3A		G11-4429-04	RUBBER SHEET (FET)	
35	3A		G11-4440-04	SHEET (AIR)	
36	2A		G11-4458-14	SHEET (SP)	
37	2A		G11-4459-04	SHEET (TX-RX PCB)	
39	2A		G11-4476-04	SHEET (MIC ELEMENT)	E
40	2A		G13-2129-14	CUSHION (TX-RX PCB)	
41	2A,3B		G13-2220-04	CUSHION (ANT/OP BOARD)	
42	2A		G13-2249-04	CUSHION (TX-RX PCB)	
43	2A		G13-2258-04	CUSHION (50PIN FPC)	
45	2A		G13-2265-04	CUSHION (BATT-)	
46	2B		G53-1762-02	PACKING (TOP)	
47	3B		G53-1763-03	PACKING (TERMINAL BLOCK)	
48	3A		G53-1764-03	PACKING (OP BOARD COVER)	
49	1B		G53-1765-11	PACKING (6KEY)	E3
51	1A		G53-1766-11	PACKING (18KEY)	E
52	2B		G53-1768-04	PACKING (VOL,CH O-RING)	
53	1B,1D		G53-1769-04	PACKING (CAP)	
54	2B		G53-1792-04	PACKING (SMA O-RING)	
56	2A		J19-5505-11	HOLDER (FG-SP)	
57	2B		J19-5506-03	HOLDER (VOL,CH)	
58	2A		J19-5507-02	HOLDER (OP BOARD)	
59	2B		J21-8579-04	MOUNTING HARDWARE (FG-SP HOLDER)	
60	1C		J29-0730-05	BELT CLIP ACCESSORY	
62	2B		J30-1296-04	SPACER (VOL)	
63	2B		J87-0006-05	FPC (LEAD FREE/VOL,CH)	
64	3B		J87-0007-05	FPC (LEAD FREE/UNIVERSAL)	
66	2B		J99-0390-04	ADHESIVE SHEET (6KEY FPC)	
67	3A		J99-0711-04	ADHESIVE SHEET (PTT FPC)	
68	2B		J99-0712-14	ADHESIVE SHEET (6KEY FPC)	
69	1A,2A		J99-0714-04	ADHESIVE SHEET (LCD)	
70	3B		J99-0715-08	ADHESIVE SHEET (UNIVERSAL)	
72	3B		J99-0725-04	ADHESIVE SHEET (TERMINAL BLOCK)	
73	3B		J99-0727-04	ADHESIVE SHEET (TOP)	
74	3B		J99-0728-04	ADHESIVE SHEET (EMG)	
75	3A	✻	J99-0732-04	ADHESIVE SHEET (OP BOARD COVER)	
77	3A		K25-2001-03	PUSH KNOB (PTT)	
78	1A		K29-9405-03	KNOB (PTT)	
79	1A		K29-9406-03	BUTTON KNOB (SIDE KEY)	
80	1B		K29-9407-03	KNOB (VOL)	
81	1B		K29-9408-13	KNOB (CH)	
A	1B,1D		N08-0564-04	DRESSED SCREW ACCESSORY	
B	3B		N09-2426-14	HEXAGON HEAD SCREW (BATT-)	
C	3A		N09-2440-15	SPECIAL SCREW (CASE)	
D	2A,2B		N09-6549-04	STEPPED SCREW (FG-SP HOLDER)	
E	2B,3A		N09-6554-05	PAN HEAD SCREW (ANT/OP BOARD)	
F	2B		N14-0844-04	CIRCULAR NUT (VOL,CH)	
G	1C		N30-3008-60	PAN HEAD MACHINE SCREW (BELT CLIP)	
H	1A,2A,2B		N83-2005-48	PAN HEAD TAPTITE SCREW (PCB)	
83	1A		S79-0472-05	KEYBOARD ASSY (12KEY)	E
85	2A		T07-0755-15	SPEAKER	
86	2A		T91-0575-05	MIC ELEMENT	
88	2A		W09-0971-05	LITHIUM CELL	
90	3A		X41-3710-10	SWITCH UNIT (PTT FPC)	
91	2B		X41-3720-10	SWITCH UNIT (6KEY FPC)	
92	2A		X42-3340-10	CORD ASSY (50PIN FPC)	
93	2B		X60-3860-10	TERMINAL ASSY (SMA)	
CONTROL UNIT (X53-4260-XX) -10: E3 -11: E					
D1-10			B30-2215-05	LED	E
D3,4			B30-2215-05	LED	E3
D7,8			B30-2215-05	LED	E3
C1			CK73HB1A104K	CHIP C 0.10UF K	
C2-6			CK73GB1E105K	CHIP C 1.0UF K	
C7,8			CK73HB1A104K	CHIP C 0.10UF K	
C10			CK73HB1A104K	CHIP C 0.10UF K	
C11			CK73HB0J105K	CHIP C 1.0UF K	
C12-15			CK73HB1H471K	CHIP C 470PF K	
C16,17			CC73HCH1H101J	CHIP C 100PF J	
C23			CK73HB1H102K	CHIP C 1000PF K	
C24			CC73HCH1H470J	CHIP C 47PF J	
C25-27			CK73HB1H102K	CHIP C 1000PF K	
C28-34			CC73HCH1H101J	CHIP C 100PF J	
C35			CK73HB1H102K	CHIP C 1000PF K	
C36			CK73HB1E682K	CHIP C 6800PF K	
C37			CK73HB1H102K	CHIP C 1000PF K	
C38			CC73HCH1H101J	CHIP C 100PF J	

PARTS LIST

CONTROL UNIT (X53-4260-XX)

Ref. No.	Address	New parts	Parts No.	Description			Destination
C40			CC73HCH1H221J	CHIP C	220PF	J	
C41			CC73HCH1H101J	CHIP C	100PF	J	
C101-104			CK73HB1A104K	CHIP C	0.10UF	K	
C105			CK73HB0J105K	CHIP C	1.0UF	K	
C106			CK73HB1E103K	CHIP C	0.010UF	K	
C107			CK73HB1A104K	CHIP C	0.10UF	K	E3
C107,108			CK73HB1A104K	CHIP C	0.10UF	K	E
C109,110			CK73HB1H102K	CHIP C	1000PF	K	
C111-113			CK73HB1A104K	CHIP C	0.10UF	K	
C114			CK73HB0J105K	CHIP C	1.0UF	K	E
C115			CK73HB1H471K	CHIP C	470PF	K	E
C116,117			CK73HB1A104K	CHIP C	0.10UF	K	
C118,119			CK73HB0J105K	CHIP C	1.0UF	K	
C120,121			CK73HB1A104K	CHIP C	0.10UF	K	
C122-124			CK73HB1E103K	CHIP C	0.010UF	K	
C130			CK73HB1E103K	CHIP C	0.010UF	K	
C131			CK73HB1A104K	CHIP C	0.10UF	K	
C133			CS77CP0J100M	CHIP TNTL	10UF	6.3WV	
C134			CK73HB1E103K	CHIP C	0.010UF	K	
C135			CK73HB1H102K	CHIP C	1000PF	K	
C136			CK73HB1E103K	CHIP C	0.010UF	K	
C137			CK73GB1E105K	CHIP C	1.0UF	K	
C138-140			CK73HB1A104K	CHIP C	0.10UF	K	
C141			CC73HCH1H101J	CHIP C	100PF	J	
C142			CS77CP0J100M	CHIP TNTL	10UF	6.3WV	
C143			CK73HB1E103K	CHIP C	0.010UF	K	
C144			CK73GB1E105K	CHIP C	1.0UF	K	
C145-148			CK73HB1A104K	CHIP C	0.10UF	K	
C149			CK73HB1E103K	CHIP C	0.010UF	K	
C150			CK73GB1E105K	CHIP C	1.0UF	K	
C151-155			CK73HB1A104K	CHIP C	0.10UF	K	
C156,157			CK73HB1H102K	CHIP C	1000PF	K	
C158			CK73HB1E103K	CHIP C	0.010UF	K	
C159			CK73HB1A104K	CHIP C	0.10UF	K	
C160,161			CK73HB1E682K	CHIP C	6800PF	K	
C401,402			CK73HB1A104K	CHIP C	0.10UF	K	
C403-405			CS77AP1C2R2M	CHIP TNTL	2.2UF	16WV	
C406			CK73HB0J105K	CHIP C	1.0UF	K	
C407,408			CK73HB1H102K	CHIP C	1000PF	K	
C409			CK73HB0J105K	CHIP C	1.0UF	K	
C411,412			CK73HB0J105K	CHIP C	1.0UF	K	
C414			CK73HB0J105K	CHIP C	1.0UF	K	
C415			CS77AP1A100M	CHIP TNTL	10UF	10WV	
C416			CK73FB1A106K	CHIP C	10UF	K	
C417			CC73HCH1H221J	CHIP C	220PF	J	
C418			CK73HB1E103K	CHIP C	0.010UF	K	
C419			CK73FB1E475K	CHIP C	4.7UF	K	
C420			CK73HB1E103K	CHIP C	0.010UF	K	
C421			CK73HB1E682K	CHIP C	6800PF	K	
C422			CC73HCH1H100C	CHIP C	10PF	C	
C424,425			CK73HB1A104K	CHIP C	0.10UF	K	
C427			CK73HB1E103K	CHIP C	0.010UF	K	
C428			CC73HCH1H030C	CHIP C	3.0PF	C	
C429,430			CK73HB1A104K	CHIP C	0.10UF	K	
C431			CK73FB1A106K	CHIP C	10UF	K	
C433			CK73FB1A106K	CHIP C	10UF	K	
C435-438			CK73HB1A563K	CHIP C	0.056UF	K	
C439,440			CK73HB1A104K	CHIP C	0.10UF	K	
C441			CK73GB1E105K	CHIP C	1.0UF	K	
C442			CK73HB1H471K	CHIP C	470PF	K	

Ref. No.	Address	New parts	Parts No.	Description			Destination
C443			CK73HB1E103K	CHIP C	0.010UF	K	
C445			CK73HB1H102K	CHIP C	1000PF	K	
C446			CK73GB1E105K	CHIP C	1.0UF	K	
C447			CK73HB1H102K	CHIP C	1000PF	K	
C448-450			CK73HB0J105K	CHIP C	1.0UF	K	
C452,453			CK73HB1E103K	CHIP C	0.010UF	K	
C454			CK73GB1E105K	CHIP C	1.0UF	K	
C455-457			CK73HB1H471K	CHIP C	470PF	K	
C459			CK73HB1H471K	CHIP C	470PF	K	
C460			CK73HB1E682K	CHIP C	6800PF	K	
C461-463			CK73HB1H471K	CHIP C	470PF	K	
C464			CK73HB1E103K	CHIP C	0.010UF	K	
C465			CK73HB1H102K	CHIP C	1000PF	K	
C466			CK73HB1E682K	CHIP C	6800PF	K	
C467,468			CK73HB1A104K	CHIP C	0.10UF	K	
C469,470			CK73HB1H102K	CHIP C	1000PF	K	
C480			CK73HB1E103K	CHIP C	0.010UF	K	
C701			CK73HB1A104K	CHIP C	0.10UF	K	
C703			CK73GB0J475K	CHIP C	4.7UF	K	
C704,705			CK73HB1A104K	CHIP C	0.10UF	K	
C706			CC73HCH1H680J	CHIP C	68PF	J	
C707			CC73HCH1H270J	CHIP C	27PF	J	
C708			CK73HB1A104K	CHIP C	0.10UF	K	
C709			CK73HB0J105K	CHIP C	1.0UF	K	
C710			CK73HB1E103K	CHIP C	0.010UF	K	
C711			CK73HB1A104K	CHIP C	0.10UF	K	
C712			CK73HB1E103K	CHIP C	0.010UF	K	
C713			CK73HB1H332K	CHIP C	3300PF	K	
C714			CK73HB1H122K	CHIP C	1200PF	K	
C715			CK73HB1A104K	CHIP C	0.10UF	K	
C716			CK73HB1H681K	CHIP C	680PF	K	
C717			CK73HB1E103K	CHIP C	0.010UF	K	
C718			CK73HB1H152K	CHIP C	1500PF	K	
C719			CK73HB1A104K	CHIP C	0.10UF	K	
C720			CK73HB1E103K	CHIP C	0.010UF	K	
C721			CK73HB1A104K	CHIP C	0.10UF	K	
C722			CK73HB1E103K	CHIP C	0.010UF	K	
C723			CK73HB1A104K	CHIP C	0.10UF	K	
C724			CK73HB1E103K	CHIP C	0.010UF	K	
C725			CC73HCH1E181J	CHIP C	180PF	J	
C726,727			CK73HB1A104K	CHIP C	0.10UF	K	
C728			CK73HB1H331K	CHIP C	330PF	K	
C730			CK73HB1H331K	CHIP C	330PF	K	
C731,732			CK73HB1E103K	CHIP C	0.010UF	K	
C734			CK73HB1H102K	CHIP C	1000PF	K	
C735			CK73HB1H122K	CHIP C	1200PF	K	
C736,737			CK73HB1A104K	CHIP C	0.10UF	K	
C738			CK73HB1H102K	CHIP C	1000PF	K	
C739			CK73HB1E682K	CHIP C	6800PF	K	
C740			CK73HB1H102K	CHIP C	1000PF	K	
C742			CK73GB1E105K	CHIP C	1.0UF	K	
C743			CK73HB0J105K	CHIP C	1.0UF	K	
C744-746			CK73HB1E103K	CHIP C	0.010UF	K	
C747,748			CK73HB1A104K	CHIP C	0.10UF	K	
C749,750			CC73HCH1H470J	CHIP C	47PF	J	
C751			CK73GB1E105K	CHIP C	1.0UF	K	
C752,753			CC73HCH1H101J	CHIP C	100PF	J	
C755			CC73HCH1H470J	CHIP C	47PF	J	
C756			CK73HB1A104K	CHIP C	0.10UF	K	
C757,758			CK73GB0J475K	CHIP C	4.7UF	K	

PARTS LIST

CONTROL UNIT (X53-4260-XX)

Ref. No.	Address	New parts	Parts No.	Description	Desti-nation
C759,760			CK73HB1E103K	CHIP C 0.010UF K	
C761			CC73HCH1H100D	CHIP C 10PF D	
C762			CK73HB1A104K	CHIP C 0.10UF K	
C763			CK73HB1E103K	CHIP C 0.010UF K	
C764			CK73HB1H102K	CHIP C 1000PF K	
C765-767			CK73HB1A104K	CHIP C 0.10UF K	
C768			CK73HB1H102K	CHIP C 1000PF K	
C771			CK73HB1A224K	CHIP C 0.22UF K	
C772			CK73HB1E103K	CHIP C 0.010UF K	
C775			CC73HCH1H470J	CHIP C 47PF J	
C777			CK73HB1H102K	CHIP C 1000PF K	
C778			CK73HB0J105K	CHIP C 1.0UF K	
C779			CK73HB1E103K	CHIP C 0.010UF K	
C780			CK73HB1A224K	CHIP C 0.22UF K	
C781,782			CK73HB0J105K	CHIP C 1.0UF K	
C785			CK73HB1A224K	CHIP C 0.22UF K	
C786			CK73HB1E103K	CHIP C 0.010UF K	
C787			CK73HB0J105K	CHIP C 1.0UF K	
C788			CC73HCH1H150J	CHIP C 15PF J	
C789			CC73HCH1H680J	CHIP C 68PF J	
C790			CK73HB1A104K	CHIP C 0.10UF K	
C791			CK73HB1A393K	CHIP C 0.039UF K	
C792			CK73HB0J105K	CHIP C 1.0UF K	
C793,794			CK73HB1A104K	CHIP C 0.10UF K	
C795			CK73HB1E103K	CHIP C 0.010UF K	
C796			CK73HB1A104K	CHIP C 0.10UF K	
C797			CK73HB0J105K	CHIP C 1.0UF K	
C798			CS77AP1A100M	CHIP TNTL 10UF 10WV	
C799			CK73HB1A104K	CHIP C 0.10UF K	
C800			CK73HB1H152K	CHIP C 1500PF K	
C801			CK73HB1C223K	CHIP C 0.022UF K	
C802			CK73HB1E103K	CHIP C 0.010UF K	
C803			CK73HB1H102K	CHIP C 1000PF K	
C804			CC73HCH1H470J	CHIP C 47PF J	
C805,806			CK73HB1H471K	CHIP C 470PF K	
C808			CK73GB0J475K	CHIP C 4.7UF K	
C809			CK73FB1A106K	CHIP C 10UF K	
C812			CK73HB0J105K	CHIP C 1.0UF K	
CN1			E40-6755-05	FLAT CABLE CONNECTOR	
CN22			E23-1325-05	TERMINAL	
CN23			E40-6758-05	PIN ASSY	
CN24			E23-1325-05	TERMINAL	
CN403			E40-6813-05	PIN ASSY	
CN404			E40-6421-15	PIN ASSY	
CN405			E40-6754-05	FLAT CABLE CONNECTOR	
CN701			E40-6586-05	SOCKET FOR PIN ASSY	
CN710			E40-6757-05	PIN ASSY	
F701			F53-0360-05	FUSE (0.25A)	
CN401			J19-5386-05	HOLDER (LITHIUM CELL)	
L1,2			L92-0408-05	CHIP FERRITE	
L3			L92-0140-05	CHIP FERRITE	
L4-7			L92-0408-05	CHIP FERRITE	
L8			L92-0140-05	CHIP FERRITE	
L101,102			L92-0408-05	CHIP FERRITE	
L401			L33-1496-05	SMALL FIXED INDUCTOR	
L402			L92-0467-05	CHIP FERRITE	
L403			L92-0466-05	CHIP FERRITE	
L409-411			L92-0467-05	CHIP FERRITE	

Ref. No.	Address	New parts	Parts No.	Description	Desti-nation
L701			L92-0140-05	CHIP FERRITE	
L702			L92-0162-05	BEADS CORE	
L704-709			L92-0162-05	BEADS CORE	
L710-712			L92-0444-05	CHIP FERRITE	
L713			L92-0163-05	BEADS CORE	
L714-717			L92-0444-05	CHIP FERRITE	
L718			L92-0408-05	CHIP FERRITE	
L719			L33-1494-05	SMALL FIXED INDUCTOR	
X101			L77-1802-05	CRYSTAL RESONATOR (32768HZ)	
X102			L77-3015-05	TCXO (18.432MHZ)	
R1			RK73HB1J105J	CHIP R 1.0M J 1/16W	
R2			RK73HB1J104J	CHIP R 100K J 1/16W	
R3			RK73HB1J123J	CHIP R 12K J 1/16W	
R4-10			RK73HB1J103J	CHIP R 10K J 1/16W	
R11			RK73HB1J104J	CHIP R 100K J 1/16W	
R12			RK73HB1J103J	CHIP R 10K J 1/16W	
R14			RK73HB1J472J	CHIP R 4.7K J 1/16W	
R15			RK73HB1J000J	CHIP R 0.0 J 1/16W	
R16			RK73HB1J331J	CHIP R 330 J 1/16W	
R17			RK73HB1J000J	CHIP R 0.0 J 1/16W	
R18			RK73HB1J822J	CHIP R 8.2K J 1/16W	
R19			RK73HB1J471J	CHIP R 470 J 1/16W	
R20			RK73HB1J102J	CHIP R 1.0K J 1/16W	
R21			RK73HB1J122J	CHIP R 1.2K J 1/16W	
R22-24			RK73HB1J102J	CHIP R 1.0K J 1/16W	
R25			RK73HB1J122J	CHIP R 1.2K J 1/16W	
R26			RK73HB1J102J	CHIP R 1.0K J 1/16W	
R27			RK73HB1J104J	CHIP R 100K J 1/16W	
R28,29			RK73HB1J102J	CHIP R 1.0K J 1/16W	
R30			RK73HB1J101J	CHIP R 100 J 1/16W	
R31			RK73HB1J102J	CHIP R 1.0K J 1/16W	
R32-35			RK73HB1J101J	CHIP R 100 J 1/16W	
R40			RK73HB1J000J	CHIP R 0.0 J 1/16W	
R101,102			RK73HB1J474J	CHIP R 470K J 1/16W	
R103			RK73HB1J102J	CHIP R 1.0K J 1/16W	
R105			RK73HB1J104J	CHIP R 100K J 1/16W	
R106			RK73HB1J472J	CHIP R 4.7K J 1/16W	E
R107			RK73HB1J104J	CHIP R 100K J 1/16W	
R108			RK73HB1J474J	CHIP R 470K J 1/16W	E
R110,111			RK73HB1J104J	CHIP R 100K J 1/16W	
R112			RK73HB1J000J	CHIP R 0.0 J 1/16W	E
R113			RK73HB1J104J	CHIP R 100K J 1/16W	
R114			RK73HB1J331J	CHIP R 330 J 1/16W	E
R115			RK73HB1J104J	CHIP R 100K J 1/16W	
R116			RK73HB1J473J	CHIP R 47K J 1/16W	
R117			RK73HB1J000J	CHIP R 0.0 J 1/16W	E
R118			RK73HB1J473J	CHIP R 47K J 1/16W	
R119			RK73HB1J104J	CHIP R 100K J 1/16W	
R120			RK73HB1J474J	CHIP R 470K J 1/16W	
R121-123			RK73HB1J104J	CHIP R 100K J 1/16W	
R126			RK73HB1J101J	CHIP R 100 J 1/16W	
R127,128			RK73HB1J000J	CHIP R 0.0 J 1/16W	
R129-131			RK73HB1J101J	CHIP R 100 J 1/16W	
R132,133			RK73HB1J104J	CHIP R 100K J 1/16W	
R135-137			RK73HB1J104J	CHIP R 100K J 1/16W	
R138			RK73HB1J473J	CHIP R 47K J 1/16W	
R139			RK73HB1J104J	CHIP R 100K J 1/16W	
R140			RK73HB1J000J	CHIP R 0.0 J 1/16W	
R141-143			RK73HB1J104J	CHIP R 100K J 1/16W	

PARTS LIST

CONTROL UNIT (X53-4260-XX)

Ref. No.	Address	New parts	Parts No.	Description				Desti-nation
R144			RK73HB1J471J	CHIP R	470	J	1/16W	
R145-147			RK73HB1J104J	CHIP R	100K	J	1/16W	
R148			RK73HB1J151J	CHIP R	150	J	1/16W	
R149			RK73HB1J000J	CHIP R	0.0	J	1/16W	
R150			RK73HB1J102J	CHIP R	1.0K	J	1/16W	
R153,154			RK73HB1J104J	CHIP R	100K	J	1/16W	
R155			RK73HB1J473J	CHIP R	47K	J	1/16W	
R156,157			RK73HB1J472J	CHIP R	4.7K	J	1/16W	
R158,159			RK73HB1J220J	CHIP R	22	J	1/16W	
R160,161			RK73HB1J000J	CHIP R	0.0	J	1/16W	
R162			RK73HB1J474J	CHIP R	470K	J	1/16W	
R163			RK73HH1J104D	CHIP R	100K	D	1/16W	
R165			RK73HB1J102J	CHIP R	1.0K	J	1/16W	
R166			RK73HB1J104J	CHIP R	100K	J	1/16W	
R167			RK73HB1J102J	CHIP R	1.0K	J	1/16W	
R168			RK73HB1J000J	CHIP R	0.0	J	1/16W	
R170			RK73HH1J103D	CHIP R	10K	D	1/16W	
R171-173			RK73HB1J000J	CHIP R	0.0	J	1/16W	
R174-178			RK73HB1J104J	CHIP R	100K	J	1/16W	
R180,181			RK73HB1J104J	CHIP R	100K	J	1/16W	
R182			RK73HB1J474J	CHIP R	470K	J	1/16W	
R183			RK73HB1J104J	CHIP R	100K	J	1/16W	
R184			RK73HB1J473J	CHIP R	47K	J	1/16W	
R185			RK73HB1J105J	CHIP R	1.0M	J	1/16W	
R186			RK73HB1J473J	CHIP R	47K	J	1/16W	
R187			RK73HB1J102J	CHIP R	1.0K	J	1/16W	
R188			RK73HB1J473J	CHIP R	47K	J	1/16W	
R189			RK73HB1J104J	CHIP R	100K	J	1/16W	
R190			RK73HB1J102J	CHIP R	1.0K	J	1/16W	
R191			RK73HB1J474J	CHIP R	470K	J	1/16W	
R192			RK73HB1J102J	CHIP R	1.0K	J	1/16W	
R193,194			RK73HB1J104J	CHIP R	100K	J	1/16W	
R401			RK73HB1J152J	CHIP R	1.5K	J	1/16W	E
R402			RK73HB1J151J	CHIP R	150	J	1/16W	
R403			RK73HB1J152J	CHIP R	1.5K	J	1/16W	E
R404			RK73HB1J151J	CHIP R	150	J	1/16W	
R405			RK73HB1J152J	CHIP R	1.5K	J	1/16W	E
R406			RK73HB1J000J	CHIP R	0.0	J	1/16W	
R407,408			RK73HB1J103J	CHIP R	10K	J	1/16W	
R409			RK73HB1J470J	CHIP R	47	J	1/16W	
R410-416			RK73HB1J471J	CHIP R	470	J	1/16W	
R417			RK73HB1J000J	CHIP R	0.0	J	1/16W	
R418			RK73HB1J471J	CHIP R	470	J	1/16W	
R419,420			RK73HB1J000J	CHIP R	0.0	J	1/16W	
R424			RK73HH1J683D	CHIP R	68K	D	1/16W	
R425			RK73HH1J333D	CHIP R	33K	D	1/16W	
R426-429			RK73HB1J000J	CHIP R	0.0	J	1/16W	
R431			RK73HB1J474J	CHIP R	470K	J	1/16W	
R432,433			RK73HB1J000J	CHIP R	0.0	J	1/16W	
R434			RK73HB1J393J	CHIP R	39K	J	1/16W	
R435,436			RK73HB1J104J	CHIP R	100K	J	1/16W	
R437			RK73HB1J471J	CHIP R	470	J	1/16W	
R438,439			RK73HB1J104J	CHIP R	100K	J	1/16W	
R440			RK73HB1J000J	CHIP R	0.0	J	1/16W	
R441			RK73HB1J153J	CHIP R	15K	J	1/16W	
R442			RK73HB1J102J	CHIP R	1.0K	J	1/16W	
R443			RK73HB1J474J	CHIP R	470K	J	1/16W	
R444			RK73HB1J564J	CHIP R	560K	J	1/16W	
R445			RK73HB1J154J	CHIP R	150K	J	1/16W	
R446			RK73HB1J274J	CHIP R	270K	J	1/16W	

Ref. No.	Address	New parts	Parts No.	Description				Desti-nation
R447			RK73HB1J104J	CHIP R	100K	J	1/16W	
R448			RK73HB1J103J	CHIP R	10K	J	1/16W	
R449-452			RK73HB1J474J	CHIP R	470K	J	1/16W	
R453			RK73HB1J104J	CHIP R	100K	J	1/16W	
R454			RK73HB1J474J	CHIP R	470K	J	1/16W	
R455			RK73HB1J102J	CHIP R	1.0K	J	1/16W	
R456			RK73HB1J474J	CHIP R	470K	J	1/16W	
R457,458			RK73HB1J104J	CHIP R	100K	J	1/16W	
R459,460			RK73HB1J102J	CHIP R	1.0K	J	1/16W	
R461			RK73HB1J103J	CHIP R	10K	J	1/16W	
R462			RK73HB1J102J	CHIP R	1.0K	J	1/16W	
R463			RK73HB1J104J	CHIP R	100K	J	1/16W	
R464			RK73HB1J474J	CHIP R	470K	J	1/16W	
R465,466			RK73HB1J103J	CHIP R	10K	J	1/16W	
R467			RK73HB1J104J	CHIP R	100K	J	1/16W	
R468			RK73HB1J000J	CHIP R	0.0	J	1/16W	
R469			RK73HB1J474J	CHIP R	470K	J	1/16W	
R470			RK73HB1J183J	CHIP R	18K	J	1/16W	
R471			RK73HB1J000J	CHIP R	0.0	J	1/16W	
R472			RK73HB1J223J	CHIP R	22K	J	1/16W	
R473			RK73HB1J332J	CHIP R	3.3K	J	1/16W	
R474,475			RK73HB1J333J	CHIP R	33K	J	1/16W	
R477,478			RK73HB1J000J	CHIP R	0.0	J	1/16W	
R479			RK73HB1J102J	CHIP R	1.0K	J	1/16W	
R481			RK73HB1J474J	CHIP R	470K	J	1/16W	
R483			RK73HB1J473J	CHIP R	47K	J	1/16W	
R484			RK73HB1J223J	CHIP R	22K	J	1/16W	
R485			RK73HB1J103J	CHIP R	10K	J	1/16W	
R487-490			RK73HH1J223D	CHIP R	22K	D	1/16W	
R491			RK73HB1J104J	CHIP R	100K	J	1/16W	
R492			RK73HB1J474J	CHIP R	470K	J	1/16W	
R493			RK73HB1J000J	CHIP R	0.0	J	1/16W	
R494-497			RK73HH1J104D	CHIP R	100K	D	1/16W	
R500			RK73HB1J473J	CHIP R	47K	J	1/16W	
R501			RK73HB1J222J	CHIP R	2.2K	J	1/16W	
R502,503			RK73HB1J103J	CHIP R	10K	J	1/16W	
R504			RK73HB1J102J	CHIP R	1.0K	J	1/16W	
R506			RK73HB1J222J	CHIP R	2.2K	J	1/16W	
R507-511			RK73HB1J102J	CHIP R	1.0K	J	1/16W	
R512			RK73HB1J101J	CHIP R	100	J	1/16W	
R513-515			RK73HB1J102J	CHIP R	1.0K	J	1/16W	
R516			RK73HB1J101J	CHIP R	100	J	1/16W	
R517			RK73HB1J102J	CHIP R	1.0K	J	1/16W	
R518			RK73HB1J101J	CHIP R	100	J	1/16W	
R519-528			RK73HB1J102J	CHIP R	1.0K	J	1/16W	
R529-531			RK73HB1J101J	CHIP R	100	J	1/16W	
R532			RK73HB1J102J	CHIP R	1.0K	J	1/16W	
R533-535			RK73HB1J101J	CHIP R	100	J	1/16W	
R536-540			RK73HB1J102J	CHIP R	1.0K	J	1/16W	
R541			RK73HB1J101J	CHIP R	100	J	1/16W	
R543			RK73HB1J101J	CHIP R	100	J	1/16W	
R544			RK73HB1J102J	CHIP R	1.0K	J	1/16W	
R545			RK73HB1J101J	CHIP R	100	J	1/16W	
R546,547			RK73HB1J102J	CHIP R	1.0K	J	1/16W	
R548,549			RK73HB1J473J	CHIP R	47K	J	1/16W	
R550			RK73HB1J000J	CHIP R	0.0	J	1/16W	
R701-707			RK73HB1J000J	CHIP R	0.0	J	1/16W	
R709-715			RK73HB1J000J	CHIP R	0.0	J	1/16W	
R716			RK73GB2A000J	CHIP R	0.0	J	1/10W	
R717-722			RK73HB1J104J	CHIP R	100K	J	1/16W	

PARTS LIST

CONTROL UNIT (X53-4260-XX)

Ref. No.	Address	New parts	Parts No.	Description				Desti-nation
R723			RK73HB1J105J	CHIP R	1.0M	J	1/16W	
R724			RK73HB1J104J	CHIP R	100K	J	1/16W	
R725			RK73HB1J100J	CHIP R	10	J	1/16W	
R726			RK73HB1J104J	CHIP R	100K	J	1/16W	
R727-729			RK73HB1J105J	CHIP R	1.0M	J	1/16W	
R730			RK73HB1J471J	CHIP R	470	J	1/16W	
R731,732			RK73HB1J105J	CHIP R	1.0M	J	1/16W	
R733			RK73HB1J473J	CHIP R	47K	J	1/16W	
R735			RK73HB1J473J	CHIP R	47K	J	1/16W	
R736			RK73HB1J823J	CHIP R	82K	J	1/16W	
R737			RK73HB1J153J	CHIP R	15K	J	1/16W	
R738			RK73HB1J563J	CHIP R	56K	J	1/16W	
R739			RK73HB1J823J	CHIP R	82K	J	1/16W	
R740			RK73HB1J000J	CHIP R	0.0	J	1/16W	
R741			RK73HB1J474J	CHIP R	470K	J	1/16W	
R742,743			RK73HB1J103J	CHIP R	10K	J	1/16W	
R744			RK73HB1J223J	CHIP R	22K	J	1/16W	
R745			RK73HB1J682J	CHIP R	6.8K	J	1/16W	
R746			RK73HB1J563J	CHIP R	56K	J	1/16W	
R747			RK73HB1J333J	CHIP R	33K	J	1/16W	
R748			RK73HB1J103J	CHIP R	10K	J	1/16W	
R749			RK73HB1J472J	CHIP R	4.7K	J	1/16W	
R750			RK73HB1J103J	CHIP R	10K	J	1/16W	
R752			RK73HB1J101J	CHIP R	100	J	1/16W	
R753			RK73HB1J683J	CHIP R	68K	J	1/16W	
R754			RK73HB1J564J	CHIP R	560K	J	1/16W	
R755			RK73HB1J104J	CHIP R	100K	J	1/16W	
R756			RK73HB1J101J	CHIP R	100	J	1/16W	
R757			RK73HB1J223J	CHIP R	22K	J	1/16W	
R758			RK73HB1J103J	CHIP R	10K	J	1/16W	
R759			RK73HB1J101J	CHIP R	100	J	1/16W	
R761-764			RK73HB1J223J	CHIP R	22K	J	1/16W	
R765			RK73HB1J334J	CHIP R	330K	J	1/16W	
R766			RK73HB1J000J	CHIP R	0.0	J	1/16W	
R767			RK73HB1J103J	CHIP R	10K	J	1/16W	
R768			RK73HB1J224J	CHIP R	220K	J	1/16W	
R769,770			RK73HB1J334J	CHIP R	330K	J	1/16W	
R771			RK73HB1J153J	CHIP R	15K	J	1/16W	
R775			RK73HB1J183J	CHIP R	18K	J	1/16W	
R777			RK73HB1J473J	CHIP R	47K	J	1/16W	
R778			RK73HB1J333J	CHIP R	33K	J	1/16W	
R779			RK73HB1J473J	CHIP R	47K	J	1/16W	
R780			RK73HB1J104J	CHIP R	100K	J	1/16W	
R782			RK73HB1J104J	CHIP R	100K	J	1/16W	
R783			RK73HB1J183J	CHIP R	18K	J	1/16W	
R784			RK73HB1J104J	CHIP R	100K	J	1/16W	
R785			RK73HB1J682J	CHIP R	6.8K	J	1/16W	
R786			RK73HB1J000J	CHIP R	0.0	J	1/16W	
R787			RK73HB1J124J	CHIP R	120K	J	1/16W	
R788			RK73HB1J473J	CHIP R	47K	J	1/16W	
R789			RK73HB1J154J	CHIP R	150K	J	1/16W	
R790			RK73HB1J102J	CHIP R	1.0K	J	1/16W	
R791			RK73HB1J474J	CHIP R	470K	J	1/16W	
R793			RK73HB1J102J	CHIP R	1.0K	J	1/16W	
R794			RK73HB1J104J	CHIP R	100K	J	1/16W	
R795			RK73HB1J000J	CHIP R	0.0	J	1/16W	
R796			RK73HB1J333J	CHIP R	33K	J	1/16W	
R797			RK73HB1J102J	CHIP R	1.0K	J	1/16W	
R798			RK73HB1J104J	CHIP R	100K	J	1/16W	
R799			RK73HB1J334J	CHIP R	330K	J	1/16W	

Ref. No.	Address	New parts	Parts No.	Description				Desti-nation
R800			RK73HB1J474J	CHIP R	470K	J	1/16W	
R801			RK73HB1J473J	CHIP R	47K	J	1/16W	
R802			RK73HB1J474J	CHIP R	470K	J	1/16W	
R803			RK73HB1J103J	CHIP R	10K	J	1/16W	
R804			RK73HB1J000J	CHIP R	0.0	J	1/16W	
R805,806			RK73HB1J473J	CHIP R	47K	J	1/16W	
R807			RK73HB1J102J	CHIP R	1.0K	J	1/16W	
R808			RK73HB1J471J	CHIP R	470	J	1/16W	
R809			RK73HB1J334J	CHIP R	330K	J	1/16W	
R810			RK73HB1J332J	CHIP R	3.3K	J	1/16W	
R811			RK73HB1J823J	CHIP R	82K	J	1/16W	
R812			RK73HB1J562J	CHIP R	5.6K	J	1/16W	
R813			RK73HB1J273J	CHIP R	27K	J	1/16W	
R814			RK73HB1J564J	CHIP R	560K	J	1/16W	
R815			RK73HB1J104J	CHIP R	100K	J	1/16W	
R816			RK73HB1J683J	CHIP R	68K	J	1/16W	
R818			RK73HB1J104J	CHIP R	100K	J	1/16W	
R819,820			RK73HB1J103J	CHIP R	10K	J	1/16W	
R821			RK73HB1J104J	CHIP R	100K	J	1/16W	
R822,823			RK73HB1J103J	CHIP R	10K	J	1/16W	
R824			RK73HB1J393J	CHIP R	39K	J	1/16W	
R825			RK73HB1J104J	CHIP R	100K	J	1/16W	
R826			RK73HB1J334J	CHIP R	330K	J	1/16W	
R827			RK73HB1J184J	CHIP R	180K	J	1/16W	
R828,829			RK73HB1J000J	CHIP R	0.0	J	1/16W	
R830			RK73HB1J105J	CHIP R	1.0M	J	1/16W	
R831			RK73HB1J474J	CHIP R	470K	J	1/16W	
R832			RK73HB1J473J	CHIP R	47K	J	1/16W	
R833			RK73HB1J684J	CHIP R	680K	J	1/16W	
R834			RK73HB1J000J	CHIP R	0.0	J	1/16W	
R835			RK73HB1J153J	CHIP R	15K	J	1/16W	
R836			RK73HB1J473J	CHIP R	47K	J	1/16W	
R837			RK73HB1J683J	CHIP R	68K	J	1/16W	
R838			RK73HB1J564J	CHIP R	560K	J	1/16W	
R839			RK73HB1J333J	CHIP R	33K	J	1/16W	
R840			RK73HB1J123J	CHIP R	12K	J	1/16W	
R841			RK73HB1J564J	CHIP R	560K	J	1/16W	
R842			RK73HB1J104J	CHIP R	100K	J	1/16W	
R843			RK73HB1J102J	CHIP R	1.0K	J	1/16W	
R844			RK73HB1J472J	CHIP R	4.7K	J	1/16W	
R845			RK73HB1J104J	CHIP R	100K	J	1/16W	
R846			RK73HB1J471J	CHIP R	470	J	1/16W	
R847			RK73HB1J182J	CHIP R	1.8K	J	1/16W	
R848			RK73HB1J000J	CHIP R	0.0	J	1/16W	E3
R849,850			RK73HB1J000J	CHIP R	0.0	J	1/16W	E
R850			RK73HB1J000J	CHIP R	0.0	J	1/16W	E3
R851,852			RK73HB1J683J	CHIP R	68K	J	1/16W	
VR1	2B		R31-0666-05	VARIABLE RESISTOR (VOL)				
S1	2B		S60-0437-05	ROTARY SWITCH (CH)				
D11			MA2S111-F	DIODE				
D12-16			1SS416	DIODE				
D17			EMZ6.8N	ZENER DIODE				
D18,19			HZC6.8-E	ZENER DIODE				
D20,21			NNCD6.8G-A	ZENER DIODE				
D22,23			DA221	DIODE				

If a part reference number is listed in a shaded box, that part does not come with the PCB.

PARTS LIST

CONTROL UNIT (X53-4260-XX)
TX-RX UNIT (X57-7360-10)

Ref. No.	Address	New parts	Parts No.	Description	Destination
D101			MA2S111-F	DIODE	E
D102			1SS416	DIODE	
D401-405			1SS388F	DIODE	
D406			HRB0502A	DIODE	
D407			MA2S111-F	DIODE	
D408			1SS301F	DIODE	
D409,410			MA2S111-F	DIODE	
D411			1SS416	DIODE	
D412			1SS301F	DIODE	
D413			1SS388F	DIODE	
D414,415			1SS416	DIODE	
D416,417			1SS388F	DIODE	
D701			1SS301F	DIODE	
D702			MA2S111-F	DIODE	
D703-706			RB706F-40	DIODE	
D707			DA221	DIODE	
IC1			NJM2130F3-ZB	BI-POLAR IC	
IC101			**Note 1**	ROM IC	
IC102			**Note 1**	MICROPROCESSOR IC	
IC103			**Note 1**	SRAM IC	
IC104			TC7SH08FU-F	MOS-IC	
IC105			XC6109C29ANN	ANALOGUE IC	
IC106			RV5C386A	MOS-IC	
IC107			SM5023CNDH-G	MOS-IC	
IC108			**Note 1**	MOS-IC	
IC109			TC7SH08FU-F	MOS-IC	
IC401			TC74LCX245FK	MOS-IC	
IC402			TC7WZ245FK-F	MOS-IC	
IC403			LM2682MMX	MOS-IC	
IC404			XC6204B332D	MOS-IC	
IC406			XC6204B332M	MOS-IC	
IC407			LT1616ES6-PBF	ANALOGUE IC	
IC408			TC75S51FE (F)	MOS-IC	
IC409			TC7W66FK-F	MOS-IC	
IC411			NJM2880U105ZB	ANALOGUE IC	
IC412,413			TPA6201A1DRBR	ANALOGUE IC	
IC414			XC61CC5602NR	MOS-IC	
IC415			TC7SET08FU-F	MOS-IC	
IC416			S-812C31BPI-G	ANALOGUE IC	
IC417			TC7WH126FK	MOS-IC	
IC418			TC7WT125FUF	MOS-IC	
IC701			**Note 1**	MOS-IC	
IC702			TC75W51FK (F)	MOS-IC	
IC703			M62364FP-F	MOS-IC	
IC704			TC75S51FE (F)	MOS-IC	
IC705			TC75W51FK (F)	MOS-IC	
IC706			TC75S51FE (F)	MOS-IC	
IC707			TC7W53FK (F)	MOS-IC	
IC708			XC6204B502PR	MOS-IC	
IC709			TC7W53FK (F)	MOS-IC	
IC710,711			TC75W51FK (F)	MOS-IC	
IC712			TC7S66FUF	MOS-IC	
IC713			TC75W51FK (F)	MOS-IC	
IC714			TC7W53FK (F)	MOS-IC	
IC715			TC75S51FE (F)	MOS-IC	
IC716			TC75W51FK (F)	MOS-IC	
IC717		*	XC9235A15CM1	MOS-IC	
Q1			2SA1362-F (GR)	TRANSISTOR	
Q2			2SC4617 (S)	TRANSISTOR	

Ref. No.	Address	New parts	Parts No.	Description	Destination
Q3,4			SSM3K15TE (F)	FET	
Q5			2SJ347F	FET	
Q101			2SA1832 (GR)F	TRANSISTOR	E
Q102			2SC4617 (S)	TRANSISTOR	E
Q103			SSM3K15TE (F)	FET	E
Q401,402			SSM6N16FE-F	FET	
Q403			2SJ648-A	FET	
Q404			SSM3K15TE (F)	FET	
Q405			SSM6N16FE-F	FET	
Q406			2SB1132 (Q,R)	TRANSISTOR	
Q407			UMG3N	TRANSISTOR	
Q408			EMD12	TRANSISTOR	
Q409			2SA1955A-F	TRANSISTOR	
Q410			SSM3K15TE (F)	FET	
Q411			SSM6N16FE-F	FET	
Q412			SSM3K15TE (F)	FET	
Q413			2SA1955A-F	TRANSISTOR	
Q414,415			EMD12	TRANSISTOR	
Q701			2SA1832 (GR)F	TRANSISTOR	
Q702,703			SSM3K15TE (F)	FET	
Q704			2SC4617 (S)	TRANSISTOR	
Q705			2SC4738 (GR)F	TRANSISTOR	
Q706			2SA1832 (GR)F	TRANSISTOR	
Q707			2SJ243-A	FET	
TH1			ERTJ0EV104H	THERMISTOR	
TH701			ERTJ0EV104H	THERMISTOR	
-			X53-4260-12	SERVICE CONTROL UNIT (6KEY)	
-			X53-4260-13	SERVICE CONTROL UNIT (18KEY)	

TX-RX UNIT (X57-7360-10)

Ref. No.	Address	New parts	Parts No.	Description	Destination
D402			B30-2278-05	LED (RED/YELLOW)	
C1			CC73HCH1H101J	CHIP C 100PF J	
C3			CK73HB1C103K	CHIP C 0.010UF K	
C4			CC73HCH1H101J	CHIP C 100PF J	
C5			CC73HCH1H100C	CHIP C 10PF C	
C6			CK73HB1C103K	CHIP C 0.010UF K	
C7			CK73GB1E105K	CHIP C 1.0UF K	
C8			CK73HB1H102K	CHIP C 1000PF K	
C9			CC73HCH1H100C	CHIP C 10PF C	
C10,11			CC73HCH1H101J	CHIP C 100PF J	
C12			CK73HB1H471K	CHIP C 470PF K	
C13			CC73HCH1H101J	CHIP C 100PF J	
C15			CK73HB1H471K	CHIP C 470PF K	
C16,17			CC73HCH1H101J	CHIP C 100PF J	
C18			CK73HB1C103K	CHIP C 0.010UF K	
C19			CK73HB1H471K	CHIP C 470PF K	
C20			CC73HCH1H220G	CHIP C 22PF G	
C21			CK73HB1H471K	CHIP C 470PF K	
C22			CC73HCH1H390G	CHIP C 39PF G	
C24,25			CC73HCH1H101J	CHIP C 100PF J	
C26			CC73HCH1H030B	CHIP C 3.0PF B	
C27			CK73HB1A104K	CHIP C 0.10UF K	
C28			CC73HCH1H101J	CHIP C 100PF J	
C29			CK73HB1A104K	CHIP C 0.10UF K	
C30			C93-0787-05	CERAMIC 0.1UF 50WV	
C31			CC73HCH1H220G	CHIP C 22PF G	

Note 1: This part cannot be replaced. Therefore, this part is not supplied as a service part.

PARTS LIST

TX-RX UNIT (X57-7360-10)

Ref. No.	Address	New parts	Parts No.	Description			Desti-nation
C32			CC73HCH1H101J	CHIP C	100PF	J	
C34			CC73HCH1H470G	CHIP C	47PF	G	
C35			CC73HCH1H101J	CHIP C	100PF	J	
C36,37			CK73HB1H471K	CHIP C	470PF	K	
C38			CK73HB1H102K	CHIP C	1000PF	K	
C41			CK73HB1H472K	CHIP C	4700PF	K	
C42			CK73HB1H471K	CHIP C	470PF	K	
C43			CS77AA1VR15M	CHIP TNTL	0.15UF	35WV	
C44			CS77BA1D100M	CHIP TNTL	10UF	20WV	
C45-47			CK73HB1H471K	CHIP C	470PF	K	
C48			C92-0863-05	CHIP TNTL	0.047UF	35WV	
C50,51			CC73HCH1H101J	CHIP C	100PF	J	
C52			CK73HB1H471K	CHIP C	470PF	K	
C53			CK73FB0J106K	CHIP C	10UF	K	
C54			CK73HB1H471K	CHIP C	470PF	K	
C55			CK73GB0J475K	CHIP C	4.7UF	K	
C56			CK73HB0J105K	CHIP C	1.0UF	K	
C57			CC73HCH1H270J	CHIP C	27PF	J	
C58			CC73HCH1H470J	CHIP C	47PF	J	
C60			CK73HB1H471K	CHIP C	470PF	K	
C62			CC73HCH1H030B	CHIP C	3.0PF	B	
C63			CK73HB1H471K	CHIP C	470PF	K	
C64			CC73HCH1H030B	CHIP C	3.0PF	B	
C65			CC73HCH1HR75B	CHIP C	0.75PF	B	
C66			CC73HCH1H080B	CHIP C	8.0PF	B	
C67-69			CC73HCH1H100B	CHIP C	10PF	B	
C70			CK73HB1H102K	CHIP C	1000PF	K	
C71			CK73GB1H103K	CHIP C	0.010UF	K	
C72			CK73GB1H102K	CHIP C	1000PF	K	
C74,75			CC73HCH1H0R5B	CHIP C	0.5PF	B	
C76			CK73HB1H102K	CHIP C	1000PF	K	
C77			CC73HCH1H220J	CHIP C	22PF	J	
C78			CK73HB1H471K	CHIP C	470PF	K	
C79			CC73HCH1H101J	CHIP C	100PF	J	
C81			CC73HCH1H470J	CHIP C	47PF	J	
C82			CK73FB0J106K	CHIP C	10UF	K	
C83			CK73HB1H471K	CHIP C	470PF	K	
C84			CC73HCH1H050B	CHIP C	5.0PF	B	
C85			CK73HB0J105K	CHIP C	1.0UF	K	
C87			CK73HB1C103K	CHIP C	0.010UF	K	
C88			CC73HCH1H101J	CHIP C	100PF	J	
C90,91			CK73HB1A104K	CHIP C	0.10UF	K	
C92			CC73HCH1H020B	CHIP C	2.0PF	B	
C93			CC73HCH1H330J	CHIP C	33PF	J	
C100			CC73HCH1H150J	CHIP C	15PF	J	
C101,102			CK73HB1H102K	CHIP C	1000PF	K	
C104			CC73HCH1H100C	CHIP C	10PF	C	
C106			CK73HB1H102K	CHIP C	1000PF	K	
C109			CK73HB1H471K	CHIP C	470PF	K	
C111			CK73HB1H102K	CHIP C	1000PF	K	
C112			CC73HCH1H560J	CHIP C	56PF	J	
C114,115			CK73HB1H102K	CHIP C	1000PF	K	
C116			CK73HB1A104K	CHIP C	0.10UF	K	
C117			CK73HB1H102K	CHIP C	1000PF	K	
C119			CC73HCH1H180J	CHIP C	18PF	J	
C120			CK73HB1H471K	CHIP C	470PF	K	
C122			CK73HB1H102K	CHIP C	1000PF	K	
C123			CK73HB1A104K	CHIP C	0.10UF	K	
C124			CC73HCH1H560J	CHIP C	56PF	J	
C125			CK73HB1H102K	CHIP C	1000PF	K	

Ref. No.	Address	New parts	Parts No.	Description			Desti-nation
C127			CC73HCH1H100C	CHIP C	10PF	C	
C128			CS77AA1A6R8M	CHIP TNTL	6.8UF	10WV	
C129			CK73HB1A104K	CHIP C	0.10UF	K	
C130			CK73HB1H102K	CHIP C	1000PF	K	
C131			CK73GB1E105K	CHIP C	1.0UF	K	
C132			CK73HB1H102K	CHIP C	1000PF	K	
C133,134			CK73HB1H471K	CHIP C	470PF	K	
C135			CC73GCH1H220G	CHIP C	22PF	G	
C136			CK73GB1H102K	CHIP C	1000PF	K	
C139			CK73HB1H471K	CHIP C	470PF	K	
C140			CC73GCH1H070B	CHIP C	7.0PF	B	
C141			CK73HB1H471K	CHIP C	470PF	K	
C142			CC73GCH1H090B	CHIP C	9.0PF	B	
C143			CC73HCH1H101J	CHIP C	100PF	J	
C144			CC73GCH1H240G	CHIP C	24PF	G	
C145			CK73HB1C103K	CHIP C	0.010UF	K	
C146			CC73GCH1H090B	CHIP C	9.0PF	B	
C148			CK73HB1H102K	CHIP C	1000PF	K	
C149			CC73GCH1H120G	CHIP C	12PF	G	
C150			CK73HB1A104K	CHIP C	0.10UF	K	
C151			CK73GB1C104K	CHIP C	0.10UF	K	
C152			CK73GB1E105K	CHIP C	1.0UF	K	
C154			CC73GCH1H030B	CHIP C	3.0PF	B	
C155			CK73HB1H471K	CHIP C	470PF	K	
C156			CK73HB1C103K	CHIP C	0.010UF	K	
C158			CC73GCH1H330G	CHIP C	33PF	G	
C159			CK73HB1H471K	CHIP C	470PF	K	
C160			CK73HB1A104K	CHIP C	0.10UF	K	
C163			CC73GCH1H120G	CHIP C	12PF	G	
C165			CC73GCH1H070B	CHIP C	7.0PF	B	
C166			CC73GCH1H560J	CHIP C	56PF	J	
C167,168			CC73HCH1H101J	CHIP C	100PF	J	
C169			CK73HB1A104K	CHIP C	0.10UF	K	
C173			CK73HB1H471K	CHIP C	470PF	K	
C177			CC73HCH1H220J	CHIP C	22PF	J	
C178			CC73HCH1H120J	CHIP C	12PF	J	
C179			CC73HCH1H100B	CHIP C	10PF	B	
C180			CC73GCH1H120G	CHIP C	12PF	G	
C190			CC73GCH1H270G	CHIP C	27PF	G	
C191			CC73GCH1H181J	CHIP C	180PF	J	
C193			CC73GCH1H330G	CHIP C	33PF	G	
C201,202			CK73GB1H104K	CHIP C	0.10UF	K	
C203			CC73HCH1H070B	CHIP C	7.0PF	B	
C204			CK73HB1C103K	CHIP C	0.010UF	K	
C206			CK73HB1C103K	CHIP C	0.010UF	K	
C207			CC73HCH1H100B	CHIP C	10PF	B	
C208			CC73HCH1H680J	CHIP C	68PF	J	
C209			CC73HCH1H101J	CHIP C	100PF	J	
C210			CK73HB1H471K	CHIP C	470PF	K	
C211			CK73HB1C103K	CHIP C	0.010UF	K	
C212			CC73HCH1H680J	CHIP C	68PF	J	
C213			CK73HB1C103K	CHIP C	0.010UF	K	
C215			CC73HCH1H050B	CHIP C	5.0PF	B	
C216			CC73HCH1H220G	CHIP C	22PF	G	
C217			CC73HCH1H470J	CHIP C	47PF	J	
C219			CC73HCH1H060B	CHIP C	6.0PF	B	
C220			CK73HB1C103K	CHIP C	0.010UF	K	
C221			CK73HB1A104K	CHIP C	0.10UF	K	
C222,223			CK73HB1C103K	CHIP C	0.010UF	K	
C224,225			CK73HB1A104K	CHIP C	0.10UF	K	

PARTS LIST

TX-RX UNIT (X57-7360-10)

Ref. No.	Address	New parts	Parts No.	Description			Destination
C226			CK73HB1H471K	CHIP C	470PF	K	
C227,228			CK73HB1A104K	CHIP C	0.10UF	K	
C229			CC73HCH1H100B	CHIP C	10PF	B	
C230			CK73HB1A104K	CHIP C	0.10UF	K	
C231			CC73HCH1H100B	CHIP C	10PF	B	
C232			CK73HB1H102K	CHIP C	1000PF	K	
C233			CK73HB1C103K	CHIP C	0.010UF	K	
C234			CK73FB1E474K	CHIP C	0.47UF	K	
C235			CK73HB1H102K	CHIP C	1000PF	K	
C236,237			CK73FB1A106K	CHIP C	10UF	K	
C238			CK73HB1C103K	CHIP C	0.010UF	K	
C239			CK73HB1A104K	CHIP C	0.10UF	K	
C240			CC73HCH1H040B	CHIP C	4.0PF	B	
C241,242			CK73HB1H102K	CHIP C	1000PF	K	
C244			CC73HCH1H120G	CHIP C	12PF	G	
C245			CK73FB1A475K	CHIP C	4.7UF	K	
C246			CK73HB1A104K	CHIP C	0.10UF	K	
C247			CC73HCH1H050B	CHIP C	5.0PF	B	
C248			CC73HCH1H220G	CHIP C	22PF	G	
C249			CK73HB1A104K	CHIP C	0.10UF	K	
C250			CC73HCH1H030B	CHIP C	3.0PF	B	
C251			CC73HCH1H060B	CHIP C	6.0PF	B	
C252			CC73HCH1H470G	CHIP C	47PF	G	
C254			CC73HCH1H100B	CHIP C	10PF	B	
C259			CC73HCH1H820J	CHIP C	82PF	J	
C261			CC73HCH1H270J	CHIP C	27PF	J	
C262			CK73HB1C103K	CHIP C	0.010UF	K	
C264			CC73HCH1H270J	CHIP C	27PF	J	
C267			CK73HB1H102K	CHIP C	1000PF	K	
C268			CC73HCH1H390J	CHIP C	39PF	J	
C270			CC73HCH1H1R5B	CHIP C	1.5PF	B	
C273			CC73HCH1H330J	CHIP C	33PF	J	
C274			CK73HB1H102K	CHIP C	1000PF	K	
C275,276			CK73HB1A104K	CHIP C	0.10UF	K	
C278			CK73HB1H102K	CHIP C	1000PF	K	
C281			CK73HB1C103K	CHIP C	0.010UF	K	
C282			CK73GB1E105K	CHIP C	1.0UF	K	
C283-286			CK73HB1H102K	CHIP C	1000PF	K	
C290			CC73HCH1H150J	CHIP C	15PF	J	
C291			CK73HB1H102K	CHIP C	1000PF	K	
C295			CC73HCH1H100B	CHIP C	10PF	B	
C296			CC73HCH1H020B	CHIP C	2.0PF	B	
C297			CC73HCH1H010B	CHIP C	1.0PF	B	
C298			CC73HCH1H020B	CHIP C	2.0PF	B	
C299			CC73HCH1H180J	CHIP C	18PF	J	
C301			CC73HCH1H180J	CHIP C	18PF	J	
C304			CC73HCH1H120J	CHIP C	12PF	J	
C306			CC73HCH1H390J	CHIP C	39PF	J	
C307			CC73HCH1H180J	CHIP C	18PF	J	
C310			CC73HCH1H470G	CHIP C	47PF	G	
C311			CK73HB1C103K	CHIP C	0.010UF	K	
C312			CK73GB1H104K	CHIP C	0.10UF	K	
C314			CK73HB1A104K	CHIP C	0.10UF	K	
C316			CK73HB1H102K	CHIP C	1000PF	K	
C317			CC73HCH1H100B	CHIP C	10PF	B	
C320			CC73HCH1H010B	CHIP C	1.0PF	B	
C355,356			CK73HB1A104K	CHIP C	0.10UF	K	
C362			CC73HCH1H330J	CHIP C	33PF	J	
C386			CC73HCH1H070B	CHIP C	7.0PF	B	
C400			CC73GCH1H220J	CHIP C	22PF	J	

Ref. No.	Address	New parts	Parts No.	Description			Destination
C402,403			CK73HB1H471K	CHIP C	470PF	K	
C404-406			CK73GB1E105K	CHIP C	1.0UF	K	
C407			CK73GB1C224K	CHIP C	0.22UF	K	
C408			CK73GB1E105K	CHIP C	1.0UF	K	
C409			C92-0765-05	CHIP TNTL	4.7UF	16WV	
C410			CK73GB1C224K	CHIP C	0.22UF	K	
C411			CK73HB1A104K	CHIP C	0.10UF	K	
C414			CK73GB1C224K	CHIP C	0.22UF	K	
C415			CK73HB1H471K	CHIP C	470PF	K	
C416			CK73GB1E105K	CHIP C	1.0UF	K	
C417			CC73HCH1E181J	CHIP C	180PF	J	
C418			CK73GB1E105K	CHIP C	1.0UF	K	
C419			CC73HCH1H220J	CHIP C	22PF	J	
C420			CK73HB1H471K	CHIP C	470PF	K	
C421			CK73GB1C224K	CHIP C	0.22UF	K	
C422			CK73GB1E105K	CHIP C	1.0UF	K	
C423			CK73GB1C224K	CHIP C	0.22UF	K	
C424,425			CK73GB1E105K	CHIP C	1.0UF	K	
C426			CC73HCH1H470J	CHIP C	47PF	J	
C428-445			CC73HCH1H470J	CHIP C	47PF	J	
C447			CC73HCH1H470J	CHIP C	47PF	J	
C449-458			CC73HCH1H470J	CHIP C	47PF	J	
C460			CC73HCH1H470J	CHIP C	47PF	J	
C462,463			CK73HB1H471K	CHIP C	470PF	K	
C464-468			CK73HB1H102K	CHIP C	1000PF	K	
C470			CC73HCH1H470J	CHIP C	47PF	J	
C472-474			CC73HCH1H470J	CHIP C	47PF	J	
C475			CK73HB0J105K	CHIP C	1.0UF	K	
C476			CC73HCH1H470J	CHIP C	47PF	J	
C478,479			CC73HCH1H470J	CHIP C	47PF	J	
C480			CK73GB1E105K	CHIP C	1.0UF	K	
C499			CC73HCH1H470J	CHIP C	47PF	J	
CN102			E23-1326-05	TERMINAL			
CN400			E40-6422-15	SOCKET FOR PIN ASSY			
CN401			E40-6752-05	FLAT CABLE CONNECTOR			
CN736			E40-6358-05	SOCKET FOR PIN ASSY			
F400			F53-0324-05	FUSE (2.5A)			
CF200			L72-1017-05	CERAMIC FILTER			
CF201			L72-1020-05	CERAMIC FILTER			
L1			L41-4795-39	SMALL FIXED INDUCTOR (4.7UH)			
L2,3			L40-5667-92	SMALL FIXED INDUCTOR (5.6NH)			
L5			L40-8275-92	SMALL FIXED INDUCTOR (82NH)			
L6,7			L40-5667-92	SMALL FIXED INDUCTOR (5.6NH)			
L8			L40-3975-92	SMALL FIXED INDUCTOR (39NH)			
L10			L92-0163-05	BEADS CORE			
L11			L40-1891-86	SMALL FIXED INDUCTOR (1.8UH)			
L12			L40-3391-86	SMALL FIXED INDUCTOR (3.3UH)			
L15			L92-0446-05	BEADS CORE			
L16-20			L40-2285-92	SMALL FIXED INDUCTOR (220NH)			
L23			L40-5678-67	SMALL FIXED INDUCTOR (56NH)			
L24			L40-2778-67	SMALL FIXED INDUCTOR (27NH)			
L25			L40-1285-92	SMALL FIXED INDUCTOR (120NH)			
L26,27			L40-3391-86	SMALL FIXED INDUCTOR (3.3UH)			
L29			L40-1085-71	SMALL FIXED INDUCTOR (100NH)			
L30			L40-6875-92	SMALL FIXED INDUCTOR (68NH)			
L98,99			L92-0163-05	BEADS CORE			
L100			L40-1085-92	SMALL FIXED INDUCTOR (100NH)			
L102			L40-6875-92	SMALL FIXED INDUCTOR (68NH)			

PARTS LIST

TX-RX UNIT (X57-7360-10)

Ref. No.	Address	New parts	Parts No.	Description	Desti-nation
L103			L40-1085-92	SMALL FIXED INDUCTOR (100NH)	
L104			L92-0138-05	CHIP FERRITE	
L105			L40-4775-92	SMALL FIXED INDUCTOR (47NH)	
L106			L41-1085-43	SMALL FIXED INDUCTOR (100NH)	
L107			L92-0149-05	CHIP FERRITE	
L108			L40-1575-92	SMALL FIXED INDUCTOR (15NH)	
L109,110			L34-4568-05	AIR-CORE COIL	
L111			L34-4576-05	AIR-CORE COIL	
L112			L92-0149-05	CHIP FERRITE	
L113			L34-4566-05	AIR-CORE COIL	
L114			L34-4565-05	AIR-CORE COIL	
L115			L41-2295-39	SMALL FIXED INDUCTOR (2.2UH)	
L117			L34-4577-05	AIR-CORE COIL	
L118			L34-4564-05	AIR-CORE COIL	
L119			L34-4563-05	AIR-CORE COIL	
L201			L40-5681-86	SMALL FIXED INDUCTOR (0.56UH)	
L202			L40-1891-86	SMALL FIXED INDUCTOR (1.8UH)	
L203			L41-4778-45	SMALL FIXED INDUCTOR (47NH)	
L204			L92-0138-05	CHIP FERRITE	
L205			L41-2785-39	SMALL FIXED INDUCTOR (0.27UH)	
L206			L41-5685-39	SMALL FIXED INDUCTOR (0.56UH)	
L207			L40-1085-92	SMALL FIXED INDUCTOR (100NH)	
L208,209			L40-3375-92	SMALL FIXED INDUCTOR (33NH)	
L210			L41-6878-14	SMALL FIXED INDUCTOR (68NH)	
L214			L92-0138-05	CHIP FERRITE	
L223			L40-5675-92	SMALL FIXED INDUCTOR (56NH)	
L224			L41-5678-14	SMALL FIXED INDUCTOR (56NH)	
L226			L92-0138-05	CHIP FERRITE	
L230			L40-2702-86	SMALL FIXED INDUCTOR (27UH)	
L250			L40-1085-57	SMALL FIXED INDUCTOR (100NH)	
L400			L92-0149-05	CHIP FERRITE	
L401			L33-1462-05	SMALL FIXED INDUCTOR	
L402			L41-2285-14	SMALL FIXED INDUCTOR (220NH)	
X1			L77-3014-05	TCXO (19.2MHZ)	
XF200			L71-0640-05	MCF (58.05MHZ)	
R1			RK73HH1J474D	CHIP R 470K D 1/16W	
R2			RK73HB1J472J	CHIP R 4.7K J 1/16W	
R3			RK73HB1J100J	CHIP R 10 J 1/16W	
R5,6			RK73HB1J100J	CHIP R 10 J 1/16W	
R7			RK73HB1J472J	CHIP R 4.7K J 1/16W	
R8			RK73HB1J100J	CHIP R 10 J 1/16W	
R9			RK73HB1J102J	CHIP R 1.0K J 1/16W	
R10			RK73HB1J000J	CHIP R 0.0 J 1/16W	
R11,12			RK73HB1J223J	CHIP R 22K J 1/16W	
R15			RK73HB1J100J	CHIP R 10 J 1/16W	
R17			RK73HH1J184D	CHIP R 180K D 1/16W	
R18			RK73HH1J473D	CHIP R 47K D 1/16W	
R19			RK73HB1J102J	CHIP R 1.0K J 1/16W	
R21			RK73HB1J106J	CHIP R 10M J 1/16W	
R22,23			RK73HB1J100J	CHIP R 10 J 1/16W	
R24,25			RK73HB1J000J	CHIP R 0.0 J 1/16W	
R26			RK73HB1J331J	CHIP R 330 J 1/16W	
R27			RK73HB1J000J	CHIP R 0.0 J 1/16W	
R28			RK73HB1J223J	CHIP R 22K J 1/16W	
R29			RK73HB1J000J	CHIP R 0.0 J 1/16W	
R30			RK73HB1J563J	CHIP R 56K J 1/16W	
R31			RK73HB1J121J	CHIP R 120 J 1/16W	
R32			RK73HB1J000J	CHIP R 0.0 J 1/16W	
R33			RK73HB1J223J	CHIP R 22K J 1/16W	

Ref. No.	Address	New parts	Parts No.	Description	Desti-nation
R34			RK73HH1J391D	CHIP R 390 D 1/16W	
R35			RK73HB1J103J	CHIP R 10K J 1/16W	
R36			RK73HB1J472J	CHIP R 4.7K J 1/16W	
R37,38			RK73HB1J000J	CHIP R 0.0 J 1/16W	
R39			RK73HB1J152J	CHIP R 1.5K J 1/16W	
R40			RK73HB1J103J	CHIP R 10K J 1/16W	
R41			RK73HB1J474J	CHIP R 470K J 1/16W	
R42			RK73HB1J473J	CHIP R 47K J 1/16W	
R43			RK73HB1J102J	CHIP R 1.0K J 1/16W	
R44,45			RK73HB1J473J	CHIP R 47K J 1/16W	
R46			RK73HH1J331D	CHIP R 330 D 1/16W	
R47			RK73HB1J220J	CHIP R 22 J 1/16W	
R48			RK73HH1J271D	CHIP R 270 D 1/16W	
R49			RK73HB1J154J	CHIP R 150K J 1/16W	
R50			RK73HB1J101J	CHIP R 100 J 1/16W	
R51			RK73HB1J102J	CHIP R 1.0K J 1/16W	
R52			RK73HB1J473J	CHIP R 47K J 1/16W	
R53			RK73HB1J683J	CHIP R 68K J 1/16W	
R54			RK73HB1J102J	CHIP R 1.0K J 1/16W	
R55			RK73HB1J104J	CHIP R 100K J 1/16W	
R56			RK73HB1J000J	CHIP R 0.0 J 1/16W	
R57			RK73HB1J124J	CHIP R 120K J 1/16W	
R58			RK73HB1J823J	CHIP R 82K J 1/16W	
R59,60			RN73HH1J104D	CHIP R 100K D 1/16W	
R62			RK73HB1J104J	CHIP R 100K J 1/16W	
R63			RK73HB1J220J	CHIP R 22 J 1/16W	
R64			RK73HB1J473J	CHIP R 47K J 1/16W	
R67			RK73HB1J472J	CHIP R 4.7K J 1/16W	
R68			RK73HB1J474J	CHIP R 470K J 1/16W	
R69			RK73HB1J560J	CHIP R 56 J 1/16W	
R70,71			RK73HB1J000J	CHIP R 0.0 J 1/16W	
R72			RK73HB1J104J	CHIP R 100K J 1/16W	
R74			RK73HB1J153J	CHIP R 15K J 1/16W	
R75			RK73HB1J100J	CHIP R 10 J 1/16W	
R76,77			RK73HB1J000J	CHIP R 0.0 J 1/16W	
R100			RK73HB1J332J	CHIP R 3.3K J 1/16W	
R101			RK73HB1J103J	CHIP R 10K J 1/16W	
R102			RK73HB1J271J	CHIP R 270 J 1/16W	
R103			RK73HB1J222J	CHIP R 2.2K J 1/16W	
R104			RK73HB1J470J	CHIP R 47 J 1/16W	
R105			RK73HB1J000J	CHIP R 0.0 J 1/16W	
R106,107			RK73HB1J472J	CHIP R 4.7K J 1/16W	
R111			RK73HB1J000J	CHIP R 0.0 J 1/16W	
R118			RK73HB1J101J	CHIP R 100 J 1/16W	
R119			RK73HB1J103J	CHIP R 10K J 1/16W	
R120			RK73HB1J223J	CHIP R 22K J 1/16W	
R123			RK73HB1J331J	CHIP R 330 J 1/16W	
R124			RK73HB1J180J	CHIP R 18 J 1/16W	
R126			RK73HB1J273J	CHIP R 27K J 1/16W	
R127			RK73HB1J473J	CHIP R 47K J 1/16W	
R129			RK73HB1J470J	CHIP R 47 J 1/16W	
R130			RK73HB1J333J	CHIP R 33K J 1/16W	
R131			RK73HB1J561J	CHIP R 560 J 1/16W	
R133			RK73HB1J331J	CHIP R 330 J 1/16W	
R134			RK73HB1J561J	CHIP R 560 J 1/16W	
R135			RK73HB1J222J	CHIP R 2.2K J 1/16W	
R136			RK73EB2ER39K	CHIP R 0.39 K 1/4W	
R137			RK73HB1J100J	CHIP R 10 J 1/16W	
R138			RK73EB2ER39K	CHIP R 0.39 K 1/4W	
R139			RK73HB1J473J	CHIP R 47K J 1/16W	

PARTS LIST

TX-RX UNIT (X57-7360-10)

Ref. No.	Address	New parts	Parts No.	Description				Destination
R141			RK73EB2ER39K	CHIP R	0.39	K	1/4W	
R142			RK73HB1J223J	CHIP R	22K	J	1/16W	
R144,145			RK73HH1J154D	CHIP R	150K	D	1/16W	
R146			RK73GB2A000J	CHIP R	0.0	J	1/10W	
R147-150			RK73HH1J184D	CHIP R	180K	D	1/16W	
R151			RK73HB1J103J	CHIP R	10K	J	1/16W	
R152			RK73EB2E823J	CHIP R	82K	J	1/4W	
R153			RK73HB1J473J	CHIP R	47K	J	1/16W	
R154			RK73HB1J000J	CHIP R	0.0	J	1/16W	
R155			RK73HB1J474J	CHIP R	470K	J	1/16W	
R156			RK73HB1J182J	CHIP R	1.8K	J	1/16W	
R157,158			RK73HB1J104J	CHIP R	100K	J	1/16W	
R161			RK73HB1J000J	CHIP R	0.0	J	1/16W	
R162,163			RK73HB1J271J	CHIP R	270	J	1/16W	
R164			RK73HB1J103J	CHIP R	10K	J	1/16W	
R165			RK73HB1J474J	CHIP R	470K	J	1/16W	
R166			RK73HB1J102J	CHIP R	1.0K	J	1/16W	
R167			RK73HB1J183J	CHIP R	18K	J	1/16W	
R168			RK73HB1J124J	CHIP R	120K	J	1/16W	
R170			RK73HB1J224J	CHIP R	220K	J	1/16W	
R171			RK73GB2A000J	CHIP R	0.0	J	1/10W	
R176,177			RK73HB1J331J	CHIP R	330	J	1/16W	
R202,203			RK73HB1J103J	CHIP R	10K	J	1/16W	
R204			RK73HB1J561J	CHIP R	560	J	1/16W	
R205			RK73HB1J224J	CHIP R	220K	J	1/16W	
R206			RK73HB1J104J	CHIP R	100K	J	1/16W	
R207			RK73HB1J224J	CHIP R	220K	J	1/16W	
R208-210			RK73HB1J104J	CHIP R	100K	J	1/16W	
R211			RK73HB1J334J	CHIP R	330K	J	1/16W	
R212			RK73HB1J221J	CHIP R	220	J	1/16W	
R214			RK73HB1J564J	CHIP R	560K	J	1/16W	
R216			RK73HB1J221J	CHIP R	220	J	1/16W	
R218			RK73HB1J221J	CHIP R	220	J	1/16W	
R220			RK73HB1J470J	CHIP R	47	J	1/16W	
R221			RK73HB1J104J	CHIP R	100K	J	1/16W	
R222			RK73HB1J100J	CHIP R	10	J	1/16W	
R223			RK73HB1J274J	CHIP R	270K	J	1/16W	
R225			RK73HB1J681J	CHIP R	680	J	1/16W	
R226			RK73HB1J103J	CHIP R	10K	J	1/16W	
R227			RK73HB1J472J	CHIP R	4.7K	J	1/16W	
R228			RK73HB1J221J	CHIP R	220	J	1/16W	
R229			RK73HB1J103J	CHIP R	10K	J	1/16W	
R230			RK73HB1J102J	CHIP R	1.0K	J	1/16W	
R231			RK73HB1J223J	CHIP R	22K	J	1/16W	
R233			RK73HB1J183J	CHIP R	18K	J	1/16W	
R234,235			RK73HB1J823J	CHIP R	82K	J	1/16W	
R236			RK73HB1J222J	CHIP R	2.2K	J	1/16W	
R237			RK73HB1J472J	CHIP R	4.7K	J	1/16W	
R238			RK73HB1J222J	CHIP R	2.2K	J	1/16W	
R239,240			RK73HB1J823J	CHIP R	82K	J	1/16W	
R241			RK73GB2A000J	CHIP R	0.0	J	1/10W	
R242			RK73HB1J473J	CHIP R	47K	J	1/16W	
R243			RK73HB1J183J	CHIP R	18K	J	1/16W	
R245			RK73HB1J104J	CHIP R	100K	J	1/16W	
R246			RK73HB1J101J	CHIP R	100	J	1/16W	
R248			RK73HB1J100J	CHIP R	10	J	1/16W	
R251			RK73HB1J000J	CHIP R	0.0	J	1/16W	
R253			RK73HB1J102J	CHIP R	1.0K	J	1/16W	
R254			RK73HB1J103J	CHIP R	10K	J	1/16W	
R255			RK73HB1J272J	CHIP R	2.7K	J	1/16W	

Ref. No.	Address	New parts	Parts No.	Description				Destination
R256			RK73HB1J103J	CHIP R	10K	J	1/16W	
R257			RK73HB1J000J	CHIP R	0.0	J	1/16W	
R260			RK73HB1J105J	CHIP R	1.0M	J	1/16W	
R262			RK73HB1J105J	CHIP R	1.0M	J	1/16W	
R263			RK73HB1J000J	CHIP R	0.0	J	1/16W	
R265			RK73HB1J000J	CHIP R	0.0	J	1/16W	
R268			RK73HB1J680J	CHIP R	68	J	1/16W	
R269			RK73HB1J221J	CHIP R	220	J	1/16W	
R272			RK73HB1J154J	CHIP R	150K	J	1/16W	
R273			RK73HB1J823J	CHIP R	82K	J	1/16W	
R274			RK73GB2A000J	CHIP R	0.0	J	1/10W	
R276,277			RK73HB1J104J	CHIP R	100K	J	1/16W	
R279			RK73HB1J000J	CHIP R	0.0	J	1/16W	
R280			RK73GB2A000J	CHIP R	0.0	J	1/10W	
R281			RK73HB1J000J	CHIP R	0.0	J	1/16W	
R282			RK73HB1J103J	CHIP R	10K	J	1/16W	
R283			RK73HB1J104J	CHIP R	100K	J	1/16W	
R285			RK73HB1J103J	CHIP R	10K	J	1/16W	
R289			RK73HB1J000J	CHIP R	0.0	J	1/16W	
R293			RK73HB1J473J	CHIP R	47K	J	1/16W	
R295			RK73GB2A000J	CHIP R	0.0	J	1/10W	
R296			RK73HB1J102J	CHIP R	1.0K	J	1/16W	
R299			RK73HB1J470J	CHIP R	47	J	1/16W	
R300-305			RK73HB1J000J	CHIP R	0.0	J	1/16W	
R307			RK73HB1J000J	CHIP R	0.0	J	1/16W	
R310,311			RK73HB1J000J	CHIP R	0.0	J	1/16W	
R313,314			RK73HB1J000J	CHIP R	0.0	J	1/16W	
R319-322			RK73HB1J000J	CHIP R	0.0	J	1/16W	
R325			RK73GB2A000J	CHIP R	0.0	J	1/10W	
R326			RK73HB1J104J	CHIP R	100K	J	1/16W	
R400			RK73HB1J000J	CHIP R	0.0	J	1/16W	
R402			RK73HB1J330J	CHIP R	33	J	1/16W	
R404-406			RK73HB1J474J	CHIP R	470K	J	1/16W	
R407			RK73HB1J473J	CHIP R	47K	J	1/16W	
R408			RK73GB2A100J	CHIP R	10	J	1/10W	
R409			RK73GB2A000J	CHIP R	0.0	J	1/10W	
R410-412			RK73HB1J474J	CHIP R	470K	J	1/16W	
R413			RK73HB1J102J	CHIP R	1.0K	J	1/16W	
R415			RK73HB1J102J	CHIP R	1.0K	J	1/16W	
R417			RK73HB1J154J	CHIP R	150K	J	1/16W	
R418			RK73HB1J102J	CHIP R	1.0K	J	1/16W	
R419,420			RK73HB1J473J	CHIP R	47K	J	1/16W	
R421			RK73HB1J102J	CHIP R	1.0K	J	1/16W	
R422			RK73HB1J474J	CHIP R	470K	J	1/16W	
R423			RK73HB1J123J	CHIP R	12K	J	1/16W	
R424			RK73HH1J334D	CHIP R	330K	D	1/16W	
R425			RK73HH1J223D	CHIP R	22K	D	1/16W	
R426			RK73HB1J100J	CHIP R	10	J	1/16W	
R427			RK73HB1J391J	CHIP R	390	J	1/16W	
R428			RK73HB1J821J	CHIP R	820	J	1/16W	
R429,430			RK73GB2A000J	CHIP R	0.0	J	1/10W	
R435			RK73HB1J104J	CHIP R	100K	J	1/16W	
R436			RK73HB1J102J	CHIP R	1.0K	J	1/16W	
R438			RK73GB2A000J	CHIP R	0.0	J	1/10W	
R439			RK73HB1J273J	CHIP R	27K	J	1/16W	
R450			RK73HB1J000J	CHIP R	0.0	J	1/16W	
R452			RK73HB1J102J	CHIP R	1.0K	J	1/16W	
R490			RK73HB1J000J	CHIP R	0.0	J	1/16W	
R498,499			RK73HB1J000J	CHIP R	0.0	J	1/16W	
R500,501			RK73HB1J103J	CHIP R	10K	J	1/16W	

PARTS LIST

TX-RX UNIT (X57-7360-10)

Ref. No.	Address	New parts	Parts No.	Description	Desti-nation
S1			S70-0483-05	TACT SWITCH	
D1			HSC119	DIODE	
D2,3			HVC131	DIODE	
D4			DA221	DIODE	
D5,6			HVC131	DIODE	
D7			HSC119	DIODE	
D8			1SV325F	VARIABLE CAPACITANCE DIODE	
D9			1SV282-F	VARIABLE CAPACITANCE DIODE	
D12			1SV282-F	VARIABLE CAPACITANCE DIODE	
D13			HVC376B	VARIABLE CAPACITANCE DIODE	
D14-17			1SV282-F	VARIABLE CAPACITANCE DIODE	
D18			1SV278F	VARIABLE CAPACITANCE DIODE	
D100			HSC277	DIODE	
D103			HZU2ALL	ZENER DIODE	
D104,105			HVC131	DIODE	
D106			HZU5CLL	ZENER DIODE	
D201			HSC277	DIODE	
D204,205			1SV305F	VARIABLE CAPACITANCE DIODE	
D207,208			1SV305F	VARIABLE CAPACITANCE DIODE	
D209			HVC131	DIODE	
D211			HVC131	DIODE	
D213			HVC131	DIODE	
D400			1SR154-400	DIODE	
D401			HSC119	DIODE	
D403			1SS388F	DIODE	
IC1			LM73CIMKX-0	MOS-IC	
IC2			LMC7101BIM5	MOS-IC	
IC3			SKY72300-362	MOS-IC	
IC4			TC75W51FUF	MOS-IC	
IC5			TLV2381IDBV	MOS-IC	
IC100			TA75W01FUF	MOS-IC	
IC200,201			TLV2381IDBV	MOS-IC	
IC202			TK10931VTL-G	ANALOGUE IC	
IC203			MCP6021-E/OT	MOS-IC	
IC400			TK11250CUCB	MOS-IC	
IC401			TC75S51FE (F)	MOS-IC	
IC402			XC9101D09AKR	ANALOGUE IC	
IC403			TK71733S	BI-POLAR IC	
IC404			TC75W51FUF	MOS-IC	
Q1			EMD9	TRANSISTOR	
Q2			DTA114YE	DIGITAL TRANSISTOR	
Q3			2SC5383-T111	TRANSISTOR	
Q4			2SC5636	TRANSISTOR	
Q6			2SC5383-T111	TRANSISTOR	
Q7			SSM6L05FU-F	FET	
Q8			2SK508NV (K52)	FET	
Q9			2SJ347F	FET	
Q10			2SK508NV (K52)	FET	
Q11			2SC5636	TRANSISTOR	
Q12			2SK879-F (Y)	FET	
Q13			SSM3K15TE (F)	FET	
Q100			2SC5636	TRANSISTOR	
Q102			2SK3077F	FET	
Q103			RD01MUS1-T113	FET	
Q104			2SC5383-T111	TRANSISTOR	
Q105			DTC144EE	DIGITAL TRANSISTOR	
Q106			RD07MVS1BT122	FET	
Q107			2SK1824-A	FET	
Q109			SSM3K15TE (F)	FET	

Ref. No.	Address	New parts	Parts No.	Description	Desti-nation
Q110			EMD5	TRANSISTOR	
Q201			2SC5108 (Y)F	TRANSISTOR	
Q202			2SC4215-F (Y)	TRANSISTOR	
Q203			3SK318	FET	
Q204			3SK294-FP	FET	
Q401-403			SSM6L05FU-F	FET	
Q404			SSM5H01TU-F	FET	
Q405			2SA1955A-F	TRANSISTOR	
Q406			UMG9N	TRANSISTOR	
TH100			ERTJ0EV104H	THERMISTOR	

EXPLODED VIEW

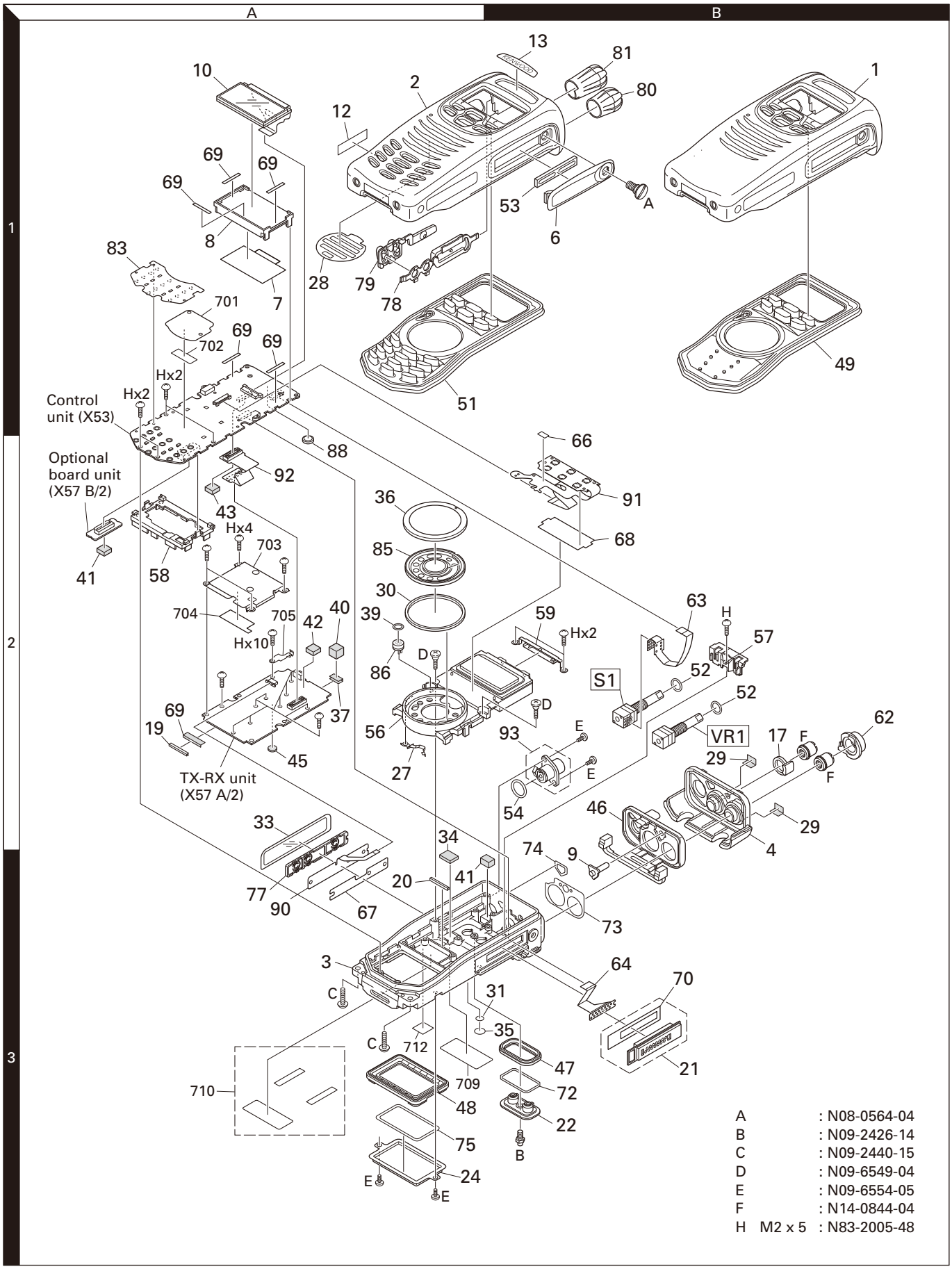

A		: N08-0564-04
B		: N09-2426-14
C		: N09-2440-15
D		: N09-6549-04
E		: N09-6554-05
F		: N14-0844-04
H	M2 x 5	: N83-2005-48

Parts with the exploded numbers larger than 700 are not supplied.
If a part reference number is listed in a box on the exploded view of the PCB, that part does not come with the PCB.
These parts must be ordered separately.

PACKING

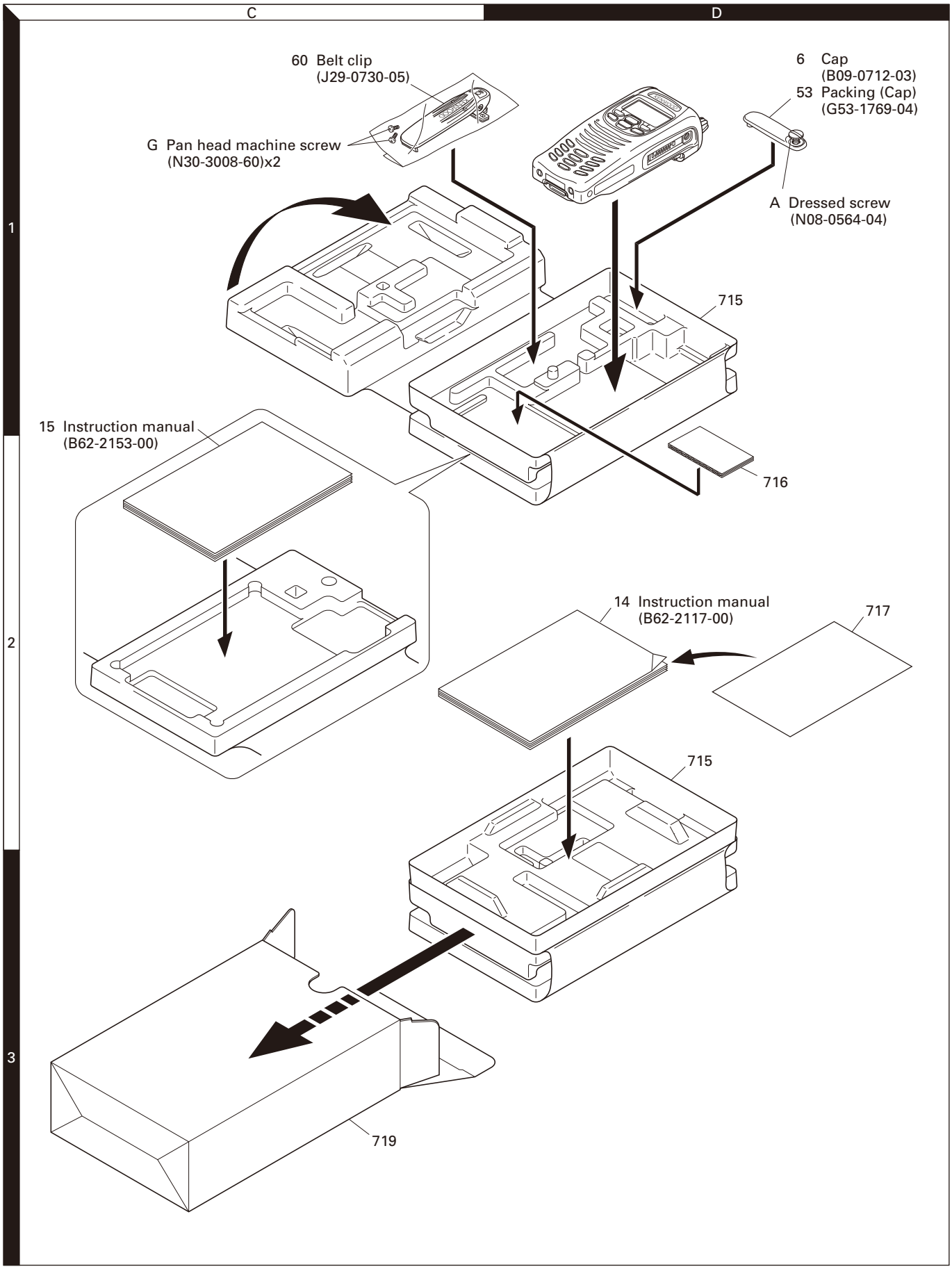

Parts with the exploded numbers larger than 700 are not supplied.

TROUBLE SHOOTING

Fault Diagnosis of the BGA (Ball Grid Array) IC

■ Overview

A flowchart for determining whether or not the transceiver can be powered on (the LCD does not function even if the power switch is turned on) due to broken BGA parts.

■ BGA parts

ASIC (IC108), DSP (IC102), FLASH (IC101), SRAM (IC103)

When the BGA IC is problematic, please bring the printed circuit board (X53-4260-12 for 6-key, X53-4260-13 for 18-key) in for service. Various ESN/default adjustment values are written on the printed circuit board for service.
Additionally various ESN stickers are included. (Please refer to pages 41 and 42.)
Button type lithium battery (W09-0971-05) does not belong to the printed circuit board for service. Please use the part which has been attached to the printed circuit board. After the printed circuit board has been readjusted, please attach any ESN stickers to the chassis. When "ESN Validation" is used with NXDN Trunking, you must modify the ESN register.

● Checking power supply voltage

Checking voltage

Points to be checked		Normal voltage
33M	IC404 (3 pin)	3.3V
15M	IC717 (4 pin)	1.5V
33A	IC406 (5 pin)	3.3V
31BU	IC416 (3 pin)	3.1V

Power supply of each device is connected through the coil.
[ASIC]
33M: L714, 15M: L715, 33A: L716
[DSP]
33M: L712, 15M: L711
[FLASH]
33M: L717
[SRAM]
31BU: L710

When an abnormal value is confirmed. →

Checking for an abnormal point

33M has an abnormal voltage.
[ASIC]
Remove L714 to check the voltage of the 33M.
If the voltage becomes normal, the ASIC is broken.
[DSP]
Remove L712 to check the voltage of the 33M.
If the voltage becomes normal, the DSP is broken.
[FLASH]
Remove L717 to check the voltage of the 33M.
If the voltage becomes normal, the FLASH is broken.

15M has an abnormal voltage.
[ASIC]
Remove L715 to check the voltage of the 15M.
If the voltage becomes normal, the ASIC is broken.
[DSP]
Remove L711 to check the voltage of the 15M.
If the voltage becomes normal, the DSP is broken.

33A has an abnormal voltage.
[ASIC]
Remove L716 to check the voltage of the 33A.
If the voltage becomes normal, the ASIC is broken.

31BU has an abnormal voltage.
[SRAM]
Remove L710 to check the voltage of the 31BU.
If the voltage becomes normal, the SRAM is broken.

If the voltage is not corrected, there is a problem other than the BGA parts.

↓ When a normal value is confirmed.

● Checking the clock

Checking the clock

Points to be checked		Normal voltage (3.3V)
18.432MHz	ASIC side R158	18.432MHz
	ASIC & DSP side R159	18.432MHz
32.768kHz	IC106 (1 pin)	32.768kHz

When an abnormal value is confirmed. →

↓ When a normal value is confirmed.

● Checking the Reset/Control signal

Checking the control signal input to the ASIC

Points to be checked		Normal voltage
RESET	IC105 (4 pin)	3.3V
/BINT	Q401 (6 pin)	3.3V
/PSW	Q402 (3 pin)	3.3V

When an abnormal value is confirmed. →

The BGA parts are not broken.

↓ When a normal value is confirmed.

Checking the control signal output from the ASIC

Points to be checked		Normal voltage
/FRST	C110	3.3V

When an abnormal value is confirmed. →

If the /FRST is always 0V, the ASIC is broken.

If the /FRST repeats 3.3V and 0V at intervals,
The ASIC, FLASH and SRAM may be broken.

↓ When a normal value is confirmed.

TROUBLE SHOOTING

● Checking the output signal from the ASIC

Points to be checked	Normal voltage	When an abnormal value is confirmed.
SBC R432	3.3V	Remove R432. If the ASIC side is 0V, the ASIC/FLASH/SRAM may be broken.
/DRST C109	3.3V	If the /DRST is 0V, the ASIC/FLASH/SRAM are broken.
/LCDRST R406	3.3V	Remove R406. If the ASIC side is 0V, the ASIC/FLASH/SRAM may be broken.
/CS4 IC402 (7 pin)	3.3V→0V→3.3V	If the /CS4 is 0V or 3.3V, the ASIC/FLASH/SRAM may be broken.
5A IC708 (5 pin)	5.0V	If 5A is 0V, parts other than the BGA are broken.

When a normal value is confirmed.

It is unlikely that the BGA parts are broken.

● The LCD displays control

● When an error display appears on the LCD.

The LCD displays "INIT ERROR1".	An error occurs when the ASIC internal RAM reads or writes. The ASIC may be broken.
The LCD displays "INIT ERROR2".	An error occurs when the DSP internal RAM reads or writes. The DSP may be broken.
The LCD displays "INIT ERROR3".	An error occurs when the SRAM internal RAM reads or writes. The SRAM may be broken.

■ Descriptions of signal names

1)	RST(RESET)	: ASIC reset signal	LOW → Reset
2)	/BINT	: Battery final voltage monitoring	LOW → Final voltage
3)	/PSW	: Power switch signal	LOW → ON
4)	/FRST	: FLASH reset signal	LOW → Reset
5)	SBC	: Switch B control	HIGH → ON
6)	/DRST	: DSP reset signal	LOW → Reset
7)	/LCDRST	: LCD reset signal	LOW → Reset
8)	/CS4	: LCD controller chip select signal	LOW → Active
9)	5A	: Analog peripheral control 5.0V power supply	

TROUBLE SHOOTING

Replacing Control Unit

■ Control unit Information

Model Name	Original Control unit Number	For Service Control unit Number
NX-200 (E: 18-key)	X53-4260-11	X53-4260-13
NX-200 (E3: 6-key)	X53-4260-10	X53-4260-12

■ Method of confirming "Original Control unit" and "Service Control unit"

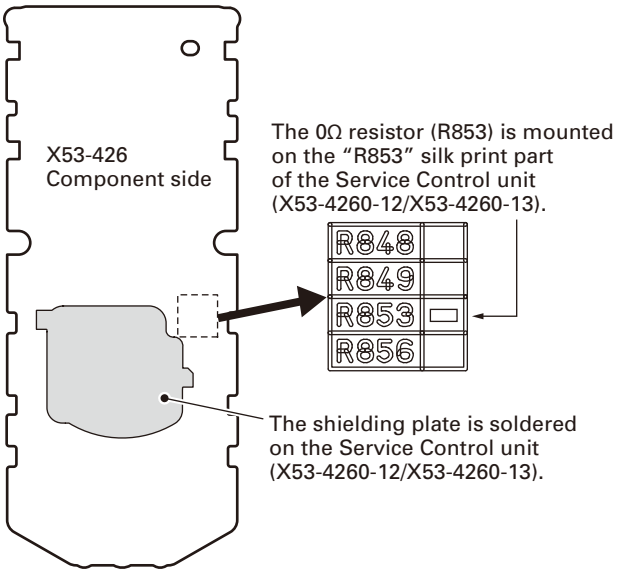

X53-426	R848	R849	R853	R856
0-10	0Ω	(None)	(None)	(None)
0-11	(None)	0Ω	(None)	(None)
0-12	0Ω	(None)	0Ω	(None)
0-13	(None)	0Ω	0Ω	(None)

Note:

- The 0Ω resistor (R848, R849, R853 and R856) is used to differentiate the destination with a visual check. These are not connected with any PCB pattern; they are specifically for production control. There is no need to change the mount of these resistors.
- There is no difference between the schematic diagram of the Service Control unit (X53-4260-12/X53-4260-13) and the schematic diagram of the original Control unit (X53-4260-10/X53-4260-11). (R848, R849 and R853 are connected with GND (ground) only.)

■ Supplied Accessories of "Service Control unit"

Item (Including Part Number)	Quantity
	Kx
Control Unit (X53-426)	1
Kenwood ESN Label	1
NXDN ESN Label	1
Product Number Label (for Kx type)	1
MPT ESN Label	1
Addendum (B59-2576-XX)	1

Note:

- "Kx" refers to a K-type series (K2 for example).
- The service control unit of the NX-200 (E,E3 types) uses the service control unit of the NX-200 (K,K2 types).

■ "Service Control unit" Data

The following data is written on the service control unit:

Data Type	Description
Firmware	NX-200/300 Firmware.
FPU Data (PC programming mode)	X53-426 (NX-300) Kx type data.
Various Adjustment Data (PC Test mode)	General adjustment values for the X53-426 (NX-300).
Kenwood ESN	Model Name: [X53-426] NX-xxxSx Type: Kx The same number as the Kenwood ESN label is written.
NXDN ESN/ MPT ESN/ Product number	The same number as the NXDN ESN/ MPT ESN/ Product Number label is written.

■ After Changing the PCB

1. After changing the printed circuit board, write the up-to-date Firmware following the instructions in the "RE-ALIGNMENT - 6.Firmware Programming Mode".
2. Using the KPG-111D, select your desired item (Model Name and Frequency) from the Model> Product Information menu, then use Program> Write Data to the Transceiver to write the FPU data (PC Programming mode). When writing to the transceiver, a Warning Message, corresponding to the item selected, appears. Click [OK] to continue writing the data.
3. Enter Program> Test Mode, then adjust the various adjustment data (PC Test Mode) as described in the "ADJUSTMENT".
4. Attach the new labels corresponding to the new printed circuit board. (Refer to the images on page 42 for label placement.)
5. If necessary, write the FPU data used by the customer with the KPG-111D.

TROUBLE SHOOTING

Note:

- When using the ESN Validation function of NXDN Trunking, the NXDN ESN number changes when the circuit board is changed (the number is written on the circuit board); the NXDN Trunking System cannot be accessed. Use the KPG-110SM on the NXDN Trunking System side to reprogram the NXDN ESN number.
- When a new printed circuit board is used, the Kenwood ESN changes, as does the Transceiver Information display of the KPG-111D, but this does not have any effect on the operation of the transceiver.
- If changing to the original Kenwood ESN and NXDN ESN, please contact our service center.

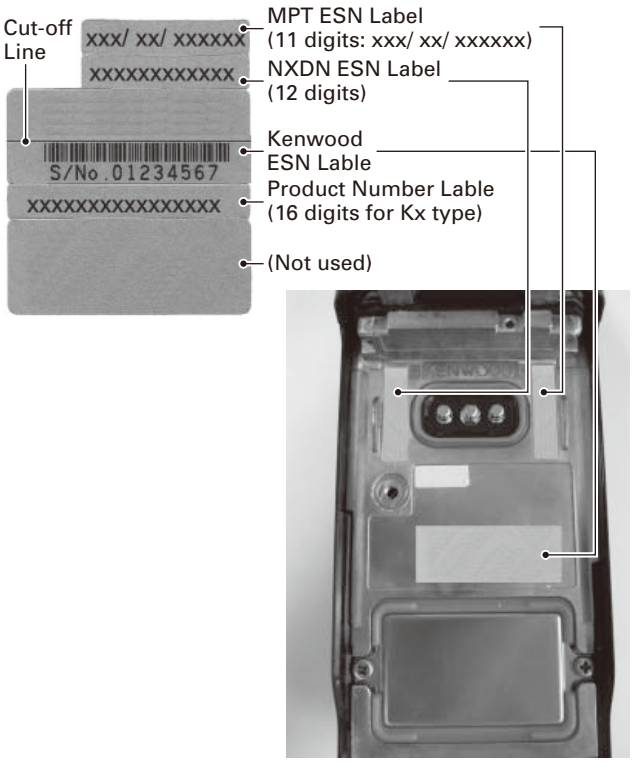

Note: A UPC code and UPC barcode is not printed on the Kenwood ESN Label. If necessary, cut the label at the cut-off line and attach only the serial number.

ADJUSTMENT

Controls

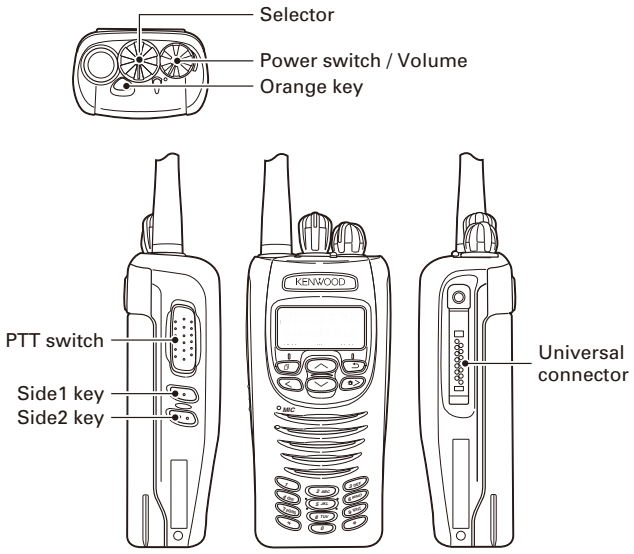

Panel Test Mode

■ Test mode operation features

This transceiver has a test mode. ***To enter test mode, press and hold the [⊃] key while turning the transceiver power ON. Before the transceiver enters test mode, the frequency version information appears on the LCD momentarily.*** Test mode can be inhibited by programming. To exit test mode, turn the transceiver power OFF. The following functions are available in test mode.

ADJUSTMENT

■ Key operation

Key	"FNC" not appears on the sub LCD display	
	Function	Display
[Selector]	-	-
[∧]	Push: Test channel up Hold: Test channel up continuously	Channel No.
[∨]	Push: Test channel down Hold: Test channel down continuously	Channel No.
[Side1]	Push: Squelch level up Hold: Squelch off	Squelch level Squelch off: icon appears
[Side2]	Wide 5k/Wide 4k/ Narrow/Very narrow	Wide 5k: "w" Wide 4k: "s" Narrow: "n" Very narrow: "v"
[⧉]	Shift to panel tuning mode	-
[⮌]	Function on	"FNC" appears on the sub LCD display
[<]	MSK 1200bps and 2400bps	2400bps: icon appears
[⌂>]	Push: Test signaling up Hold: Test signaling up continuously	Signaling No.
[Orange]	-	-
[PTT]	Transmit	-
[0] to [9] and [#], [✱]	Use as the DTMF keypad. If a key is pressed during transmission, the DTMF corresponding to the key that was presses is sent.	-

Key	"FNC" appears on the sub LCD display	
	Function	Display
[Selector]	-	-
[∧]	Function off	-
[∨]	Analog/NXDN	Analog: "A" NXDN: "N"
[Side1]	Function off	-
[Side2]	LCD all lights	LCD all point appears
[⧉]	High power/Low power	High: "H" Low: "L"
[⮌]	Function off	-
[<]	Compander on/off	On: icon appears
[⌂>]	Beat shift on/off	On: icon appears
[Orange]	Function off	-
[PTT]	Transmit	-
[0] to [9] and [#], [✱]	Function off	-

• LED indicator

Red LED Lights during transmission.
Green LED Lights when there is carrier.

• Sub LCD indicator

"FNC" Appears at function on.

• LCD display in panel test mode

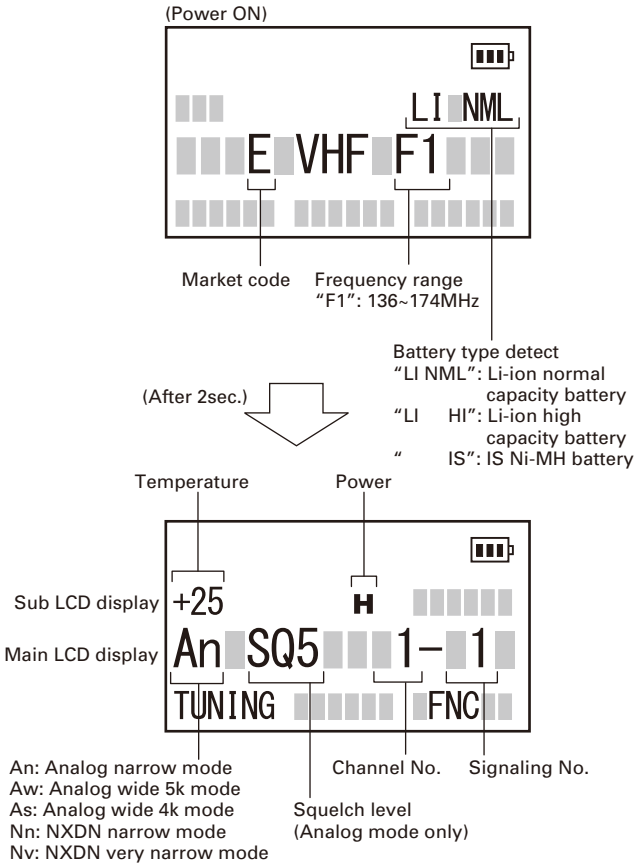

■ Frequency and Signaling

The transceiver has been adjusted for the frequencies shown in the following table. When required, readjust them following the adjustment procedure to obtain the frequencies you want in actual operation.

• Test frequency

CH	RX (MHz)	TX (MHz)
1	155.05000	155.10000
2	136.05000	136.10000
3	173.95000	173.90000
4	155.00000	155.00000
5	155.20000	155.20000
6	155.40000	155.40000
7~16	-	-

ADJUSTMENT

• Analog mode signaling

No.	RX	TX
1	None	None
2	None	100Hz Square Wave
3	LTR Data: AREA=0, GOTO=12 HOME=12 ID=47, FREE=25	LTR Data: AREA=0, GOTO=12 HOME=12 ID=47, FREE=25
4	QT: 67.0Hz	QT: 67.0Hz
5	QT: 151.4Hz	QT: 151.4Hz
6	QT: 210.7Hz	QT: 210.7Hz
7	QT: 254.1Hz	QT: 254.1Hz
8	DQT: D023N	DQT: D023N
9	DQT: D754I	DQT: D754I
10	DTMF: 159D	DTMF: 159D
11	None	DTMF Code 9
12	2-tone: A: 304.7Hz B: 3106.0Hz	2-tone: A: 304.7Hz B: 3106.0Hz
13	Single Tone: 979.9Hz	Single Tone: 979.9Hz
14	None	Single Tone: 1000Hz
15	None	MSK
16	MSK	MSK

• NXDN mode signaling

No.	RX	TX
1	RAN1	RAN1
2	None	PN9
3	RAN1	Maximum deviation pattern

RAN: Radio Access Number
PN9: Pseudo-Random Pattern (for production only)

Panel Tuning Mode

■ Preparations for tuning the transceiver

Before attempting to tune the transceiver, connect the unit to a suitable power supply.

Whenever the transmitter is turned, the unit must be connected to a suitable dummy load (i.e. power meter).

The speaker output connector must be terminated with a 8Ω dummy load and connected to an AC voltmeter and an audio distortion meter or a SINAD measurement meter at all times during tuning.

■ Transceiver tuning (To enter tuning mode)

To enter tuning mode, press the [⧉] key while the transceiver is in test mode. Use the [<] key to write tuning data through tuning modes, and the [∧]/[∨] key to adjust tuning requirements (1 to 4096 appears on the LCD).

Use the [⚙>] key to select the adjustment item through tuning modes. Use the [⮌] key to adjust 5 reference level adjustments, and use the [Side2] key to switch between Wide 5k/Wide 4k/Narrow/Very narrow.

• LCD display in panel tuning mode

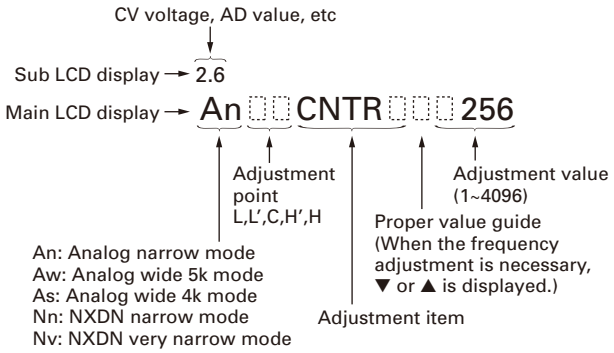

■ Key operation

Key	Function	
	Push	Hold (1 second)
[Selector]	-	
[∧]	Adjustment value up	Continuation up
[∨]	Adjustment value down	Continuation down
[Side1]	Auto adjustment start	-
[Side2]	Wide 5k/Wide 4k/ Narrow/Very narrow	-
[⧉]	Shift to panel test mode	-
[⮌]	To enter 5 reference level adjustments	-
[<]	Writes the adjustment value	-
[⚙>]	Go to next adjustment item	Back to last adjustment item
[Orange]	-	
[PTT]	Transmit	
[0] to [9] and [#], [✱]	-	

■ 5 reference level adjustments frequency

Tuning point	RX (MHz)	TX (MHz)
Low	136.05000	136.10000
Low'	145.55000	145.60000
Center	155.05000	155.10000
High'	164.55000	164.60000
High	173.95000	173.90000

ADJUSTMENT

■ Adjustment item supplement

Adjustment Item	Description
LCD contrast	The contrast of LCD display can be changed.
Counterclockwise Volume	"Counterclockwise Volume" is adjusted at the minimum volume position. "Clockwise Volume" is adjusted at the maximum volume position. These adjustments can correct the volume variation. Both "Counterclockwise Volume" and "Clockwise Volume" must be adjusted. (The curve data of volume is applied.)
Clockwise Volume	
Receive Assist	The lock voltage of VCO (Receive) is adjusted. This item must be adjusted before all adjustment items for receiver section are adjusted.
Transmit Assist	The lock voltage of VCO (Transmit) is adjusted. This item must be adjusted before all adjustment items for transmitter section are adjusted.
Frequency	Frequency stability is adjusted under receiving condition with SSG. The SSG needs 0.001ppm accuracy so please use a standard oscillator if necessary. This item can be adjusted only in PC Test Mode so that the adjustment value is not changed easily.
RTC	Real-Time Clock (RTC) is adjusted. This item uses the internal clock. (Any measurement equipment is not required.)
High Transmit Power	High Transmit Power is adjusted.
Low Transmit Power	Low Transmit Power is adjusted.
Balance	The transmit audio frequency response is adjusted. This item is adjusted so that the deviation of 2kHz becomes the same deviation of 20Hz. This item must be adjusted before all adjustment items for deviations are adjusted.
Maximum Deviation (NXDN Narrow/Very Narrow)	Maximum Deviation of NXDN (Narrow/Very Narrow) is adjusted.
Maximum Deviation (Analog Wide 5k/Wide 4k/ Narrow)	Maximum Deviation of Analog (Wide 5k/Wide 4k/Narrow) is adjusted. This item must be adjusted before all adjustment items for tone deviations are adjusted. Note: "Maximum Deviation (Analog Narrow)" must be adjusted before "CWID Deviation (NXDN Very Narrow)" is adjusted.
QT Deviation	QT tone deviation is adjusted.
DQT Deviation	DQT tone deviation is adjusted.
LTR Deviation	LTR tone deviation is adjusted.
DTMF Deviation	DTMF tone deviation is adjusted.
Single Tone Deviation	The deviation of Single Tone used in "2-tone" is adjusted.
MSK Deviation	MSK tone deviation is adjusted.
CWID Deviation	CWID tone deviation is adjusted. CWID is used to inform the others who is transmitting on a 6.25-kHz spacing channel. (In FCC rule, Analog mode or CWID is required for each channel-spacing.)
VOX 1	VOX sensitivity at "VOX 1" is adjusted.
VOX 10	VOX sensitivity at "VOX 10" is adjusted.
Sensitivity 1	Band-Pass Filter is adjusted. The performance of Receive Sensitivity is improved.
Sensitivity 2	The gain of RF amplifier is adjusted. The performance of the interfering wave is improved.
RSSI Reference	The minimum RSSI level for scan stop is adjusted.
Open Squelch	The squelch level at level "5" is adjusted.
Low RSSI	RSSI display level "▔▁▂▃" is adjusted. Both "Low RSSI" and "High RSSI" must be adjusted. (The curve data of RSSI level is applied.)
High RSSI	
Tight Squelch	The squelch level at level "9" is adjusted.
Battery Warning Level	Battery Warning Level (LED blinking level) is adjusted. Battery Warning Level minus 0.4V is the transmission inhibited level.

ADJUSTMENT

■ Adjustment item and Display

Order	Adjusutment item	Main LCD display	Sub LCD display	Aw (Analog Wide 5k)	As (Analog Wide 4k)	An (Analog Narrow)	Nn (NXDN Narrow)	Nv (NXDN Very Narrow)	Adjust item Number
				Adjustment range					
1	LCD contrast	CNTR	-	1 point ADJ					Common Section 2
				1~256					
2	Counterclockwise Volume	VOL1	VOL measurement value	1 point ADJ					Common Section 3
				1~256					
3	Clockwise Volume	VOL2	VOL measurement value	1 point ADJ					Common Section 4
				1~256					
4	Receive Assist	RAST	(CV voltage)	5 point ADJ					Common Section 5
				1~4096					
5	Transmit Assist	TAST	(CV voltage)	5 point ADJ					Common Section 5
				1~4096					
6	RTC (Real-time clock)	RTC	-	1 point ADJ					Common Section 6
				–62~–1/0/+1~+62					
7	High Transmit Power	HIPWR	-	-	-	5	-	-	Transmitter Section 1
				1~1024					
8	Low Transmit Power	LOPWR	-	-	-	5	-	-	Transmitter Section 2
				1~1024					
9	Balance	BAL	(Encode frequency)	-	-	5	-	-	Transmitter Section 3
				1~256					
10	Maximum Deviation (NXDN)	NDEV	-	-	-	-	5	5	Transmitter Section 4
				1~1024					
11	Maximum Deviation (Analog)	ADEV	-	5	5	5	-	-	Transmitter Section 5
				1~1024					
12	QT Deviation	QT	-	1	1	1	-	-	Transmitter Section 6
				1~1024					
13	DQT Deviation	DQT	-	1	1	1	-	-	Transmitter Section 7
				1~1024					
14	LTR Deviation	LTR	-	1	-	1	-	-	Transmitter Section 8
				1~1024					
15	DTMF Deviation	DTMF	-	1	1	1	-	-	Transmitter Section 9
				1~1024					
16	Single Tone Deviation	TONE	-	1	1	1	-	-	Transmitter Section 10
				1~1024					
17	MSK Deviation	MSK	-	1	1	1	-	-	Transmitter Section 11
				1~1024					
18	CWID Deviation	CWID	-	-	-	-	-	1	Transmitter Section 12
				1~1024					
19	VOX1	VOX1	VOX measurement value	1 point ADJ					Transmitter Section 13
				1~256					
20	VOX10	VOX10	VOX measurement value	1 point ADJ					Transmitter Section 14
				1~256					
21	Sensitivity 1	SENS1	(RSSI measurement value)	-	-	5	-	-	Receive Section 2
				1~256					

ADJUSTMENT

Order	Adjusutment item	Main LCD display	Sub LCD display	Aw (Analog Wide 5k)	As (Analog Wide 4k)	An (Analog Narrow)	Nn (NXDN Narrow)	Nv (NXDN Very Narrow)	Adjust item Number
				Adjustment range					
22	Sensitivity 2	SENS2	(RSSI measurement value)	-	-	5	-	-	Receive Section 3
				1~256					
23	RSSI Reference	RRSSI	(RSSI measurement value)	5	5	5	- *1	5	Receive Section 4
				1~256					
24	Open Squelch	SQL	(ASQDET measurement value)	5	5	5	- *1	5	Receive Section 5
				1~256					
25	Low RSSI	LRSSI	(RSSI measurement value)	5	5	5	- *1	5	Receive Section 6
				1~256					
26	High RSSI	HRSSI	(RSSI measurement value)	5	5	5	- *1	5	Receive Section 7
				1~256					
27	Tight Squelch	SQLT	(ASQDET measurement value)	5	5	5	-	-	Receive Section 8
				1~256					
28	Battery Warning Level	BATT	(BATT measurement value)	1 point ADJ					Transmitter Section 15
				1~256					

*1: Because NXDN Narrow is adjusted by adjusting Analog Narrow, it is not necessary to adjust NXDN Narrow.

■ Panel tuning mode flow chart

Note: In this Panel tuning mode flow chart, the Adjustment item name is modified.

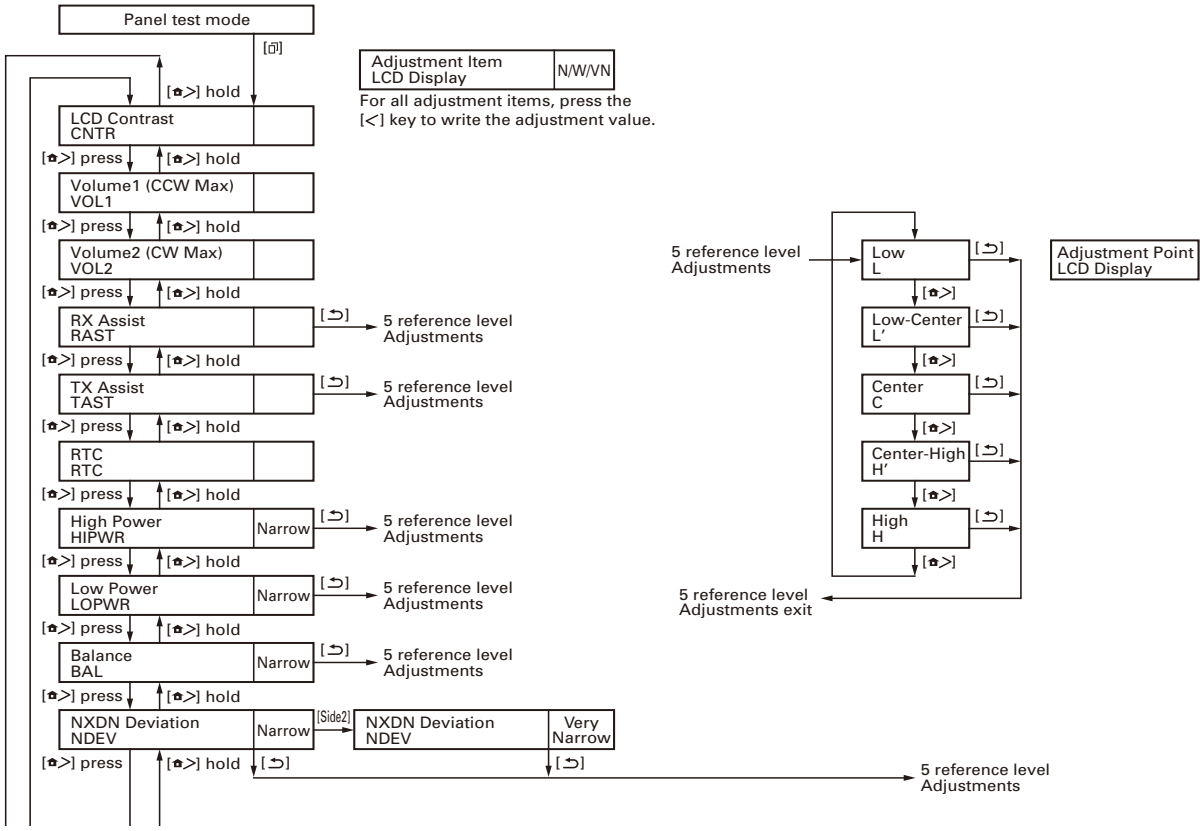

ADJUSTMENT

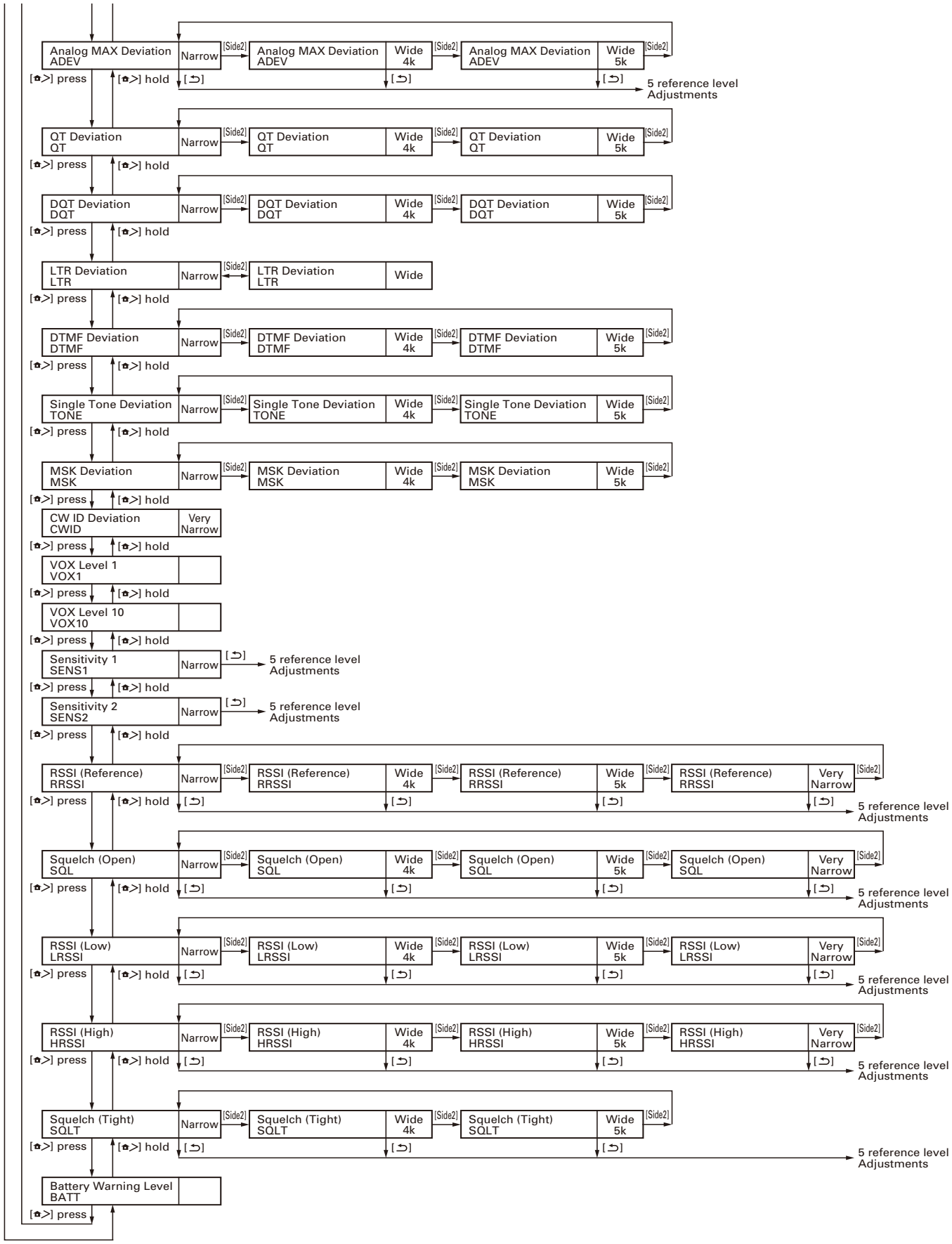
Analog MAX Deviation ADEV
Narrow
[Side2]
Analog MAX Deviation ADEV
Wide 4k
[Side2]
Analog MAX Deviation ADEV
Wide 5k
[Side2]
[⚙>] press
[⚙>] hold
[⮌]
5 reference level Adjustments
QT Deviation QT
DQT Deviation DQT
LTR Deviation LTR
Wide
DTMF Deviation DTMF
Single Tone Deviation TONE
MSK Deviation MSK
CW ID Deviation CWID
Very Narrow
VOX Level 1 VOX1
VOX Level 10 VOX10
Sensitivity 1 SENS1
Sensitivity 2 SENS2
RSSI (Reference) RRSSI
Very Narrow
Squelch (Open) SQL
RSSI (Low) LRSSI
RSSI (High) HRSSI
Squelch (Tight) SQLT
Battery Warning Level BATT

ADJUSTMENT

Test Equipment Required for Alignment

Test Equipment	Major Specifications	
1. Standard Signal Generator (SSG)	Frequency Range Modulation Output When performing the Frequency adjustment, the following accuracy is necessary. • 0.003ppm Use a standard oscillator for adjustments, if necessary.	136 to 174MHz Frequency modulation and external modulation –127dBm/0.1μV to greater than –20dBm/22.4mV
2. Power Meter	Input Impedance Operation Frequency Measurement Capability	50Ω 136 to 174MHz Vicinity of 10W
3. Deviation Meter	Frequency Range	136 to 174MHz
4. Digital Volt Meter (DVM)	Measuring Range Input Impedance	10mV to 10V DC High input impedance for minimum circuit loading
5. Oscilloscope		DC through 30MHz
6. High Sensitivity Frequency Counter	Frequency Range Frequency Stability	10Hz to 1000MHz 0.2ppm or less
7. Ammeter		5A
8. AF Volt Meter (AF VTVM)	Frequency Range Voltage Range	50Hz to 10kHz 1mV to 10V
9. Audio Generator (AG)	Frequency Range Output	50Hz to 5kHz or more 0 to 1V
10. Distortion Meter	Capability Input Level	3% or less at 1kHz 50mV to 10Vrms
11. 8Ω Dummy Load		Approx. 8Ω, 3W
12. Regulated Power Supply		5V to 10V, approx. 3A Useful if ammeter equipped

■ Antenna connector adapter

The antenna connector of this transceiver uses an SMA terminal.

Use an antenna connector adapter [SMA(f) – BNC(f) or SMA(f) – N(f)] for adjustment. (The adapter is not provided as an option, so buy a commercially-available one.)

■ Nut wrench

In order to turn the volume nut and the channel selector nut, use a recommendation tool.

KENWOOD part No.: W05-1123-00

■ Battery jig (W05-1370-00)

Connect the power cable properly between the battery jig installed in the transceiver and the power supply, and be sure output voltage and the power supply polarity prior to switching the power supply ON, otherwise over voltage and reverse connection may damage the transceiver, or the power supply or both.

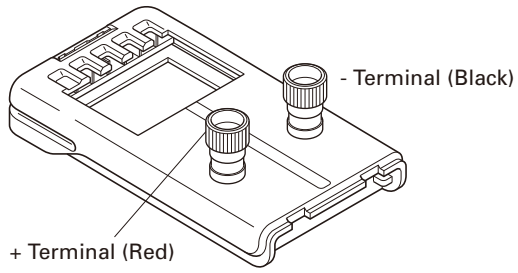

Note:

- When using the battery jig, you must measure the voltage at the terminals of the battery jig. Otherwise, a slight voltage drop may occur within the power cable, between the power supply and the battery jig, especially while the transceiver transmits.
- The battery jig is detected as "Li-ion High Capacity Battery".
  Li-ion High Capacity Battery: R1=Open
  Li-ion Normal Capacity Battery: R1=560kΩ

Schematic diagram

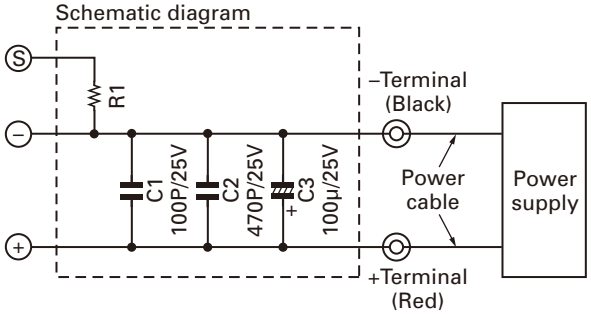

ADJUSTMENT

■ Universal connector

Use the interface cable (KPG-36/36A) for PC tuning or the lead wire with plug (E30-3287-28) and screw (N08-0535-08) for panel tuning. Connect the plug to the universal connector of the transceiver and tighten the screw.

The lead wire with plug (E30-3287-28) and screw (N08-0535-08) terminals are as follows. Numbers are universal connector terminal numbers.

Caution

1. When connecting the plug to the universal connector of the transceiver, a short circuit may occur. To prevent this, be sure to turn the transceiver POWER switch off.
2. Since the RX AF output is a BTL output, there is a DC component. Isolate this with a capacitor or transformer as shown in the figure.
3. Do not connect an instrument between red or black and GND.

• Universal connector

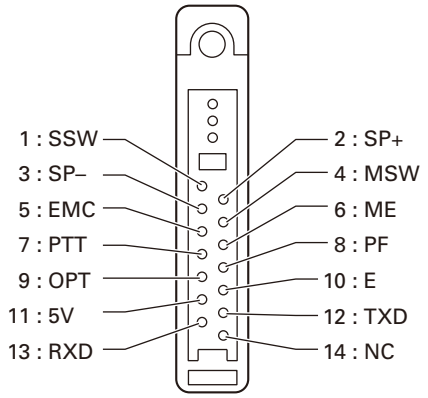

• Panel tuning

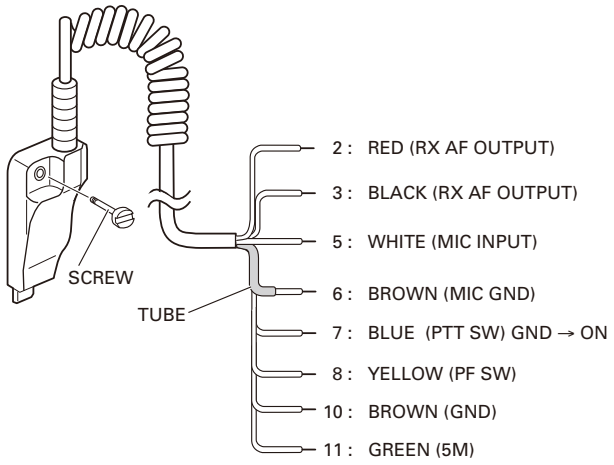

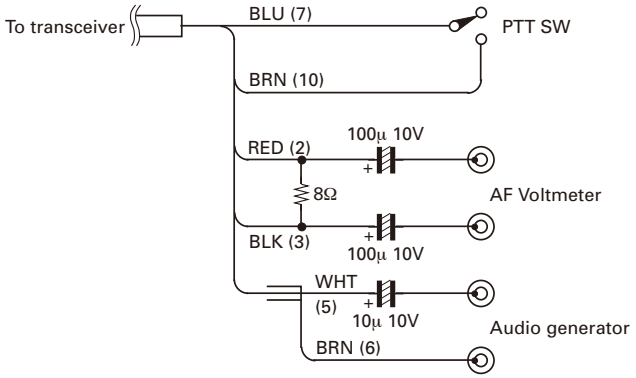

Note: Pin 1 (SSW) and Pin 4 (MSW) are connected to Pin 10 (GND) to active External SP and External MIC.

• PC tuning

Connect the wires to the PCB in the connector case of interface cable.

For output the wires out of the connector case, need to process the connector case.

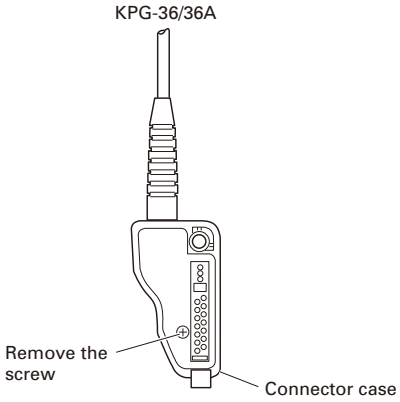

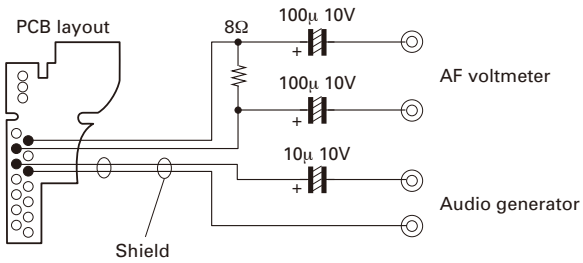

ADJUSTMENT

Radio Check Section

Item	Condition		Measurement			Adjustment			Specifications / Remarks
	Panel test mode	PC test mode	Test-equipment	Unit	Terminal	Unit	Parts	Method	
1. Frequency check	1) CH-Sig: 1-1 PTT: ON	1) Test Channel Channel: 1 Test Signaling Mode: Analog Signaling: 1 PTT: Press [Transmit] button.	f. counter	Panel	ANT			Check an internal temperature of radio within 25˚C ± 2˚C.	±0.5ppm –77.55Hz~+77.55Hz @155.1MHz
2. High power check (Batt: 7.5V)	1) CH-Sig: 1-1 PTT: ON	1) Test Channel Channel: 1 Test Signaling Mode: Analog Signaling: 1 PTT: Press [Transmit] button.	Power meter Ammeter					Check	4.5W~5.5W 2.0A or less
	2) CH-Sig: 2-1 PTT: ON	2) Test Channel Channel: 2 Test Signaling Mode: Analog Signaling: 1 PTT: Press [Transmit] button.							
	3) CH-Sig: 3-1 PTT: ON	3) Test Channel Channel: 3 Test Signaling Mode: Analog Signaling: 1 PTT: Press [Transmit] button.							
3. Low power check (Batt: 7.5V)	1) CH-Sig: 1-1 PTT: ON	1) Test Channel Channel: 1 Test Signaling Mode: Analog Signaling: 1 PTT: Press [Transmit] button.							0.7W~1.2W 1.0A or less
	2) CH-Sig: 2-1 PTT: ON	2) Test Channel Channel: 2 Test Signaling Mode: Analog Signaling: 1 PTT: Press [Transmit] button.							
	3) CH-Sig: 3-1 PTT: ON	3) Test Channel Channel: 3 Test Signaling Mode: Analog Signaling: 1 PTT: Press [Transmit] button.							
4. MIC sensitivity check	1) CH-Sig: 1-1 AG: 1kHz PTT: ON	1) Test Channel Channel: 1 Test Signaling Mode: Analog Signaling: 1 AG: 1kHz PTT: Press [Transmit] button.	Deviation meter Oscilloscope AG AF VTVM		ANT Universal connector			Adjust AG input to get a standard MOD.	12.5mV±5.8mV

ADJUSTMENT

Item	Condition		Measurement			Adjustment			Specifications / Remarks
	Panel test mode	PC test mode	Test-equipment	Unit	Terminal	Unit	Parts	Method	
5. Sensitivity check	1) CH-Sig: 1-1 SSG output Wide 5k: –116dBm (0.35μV) (MOD: 1kHz/±3kHz) Wide 4k: –116dBm (0.35μV) (MOD: 1kHz/±2.4kHz) Narrow: –115dBm (0.40μV) (MOD: 1kHz/±1.5kHz)	1) Test Channel Channel: 1 Test Signaling Mode: Analog Signaling: 1 SSG output Wide 5k: –116dBm (0.35μV) (MOD: 1kHz/±3kHz) Wide 4k: –116dBm (0.35μV) (MOD: 1kHz/±2.4kHz) Narrow: –115dBm (0.40μV) (MOD: 1kHz/±1.5kHz)	SSG AF VTVM Oscilloscope Distortion meter 8Ω Dummy load		ANT Universal connector			Check	12dB SINAD or more

Common Section

Item	Condition		Measurement			Adjustment			Specifications / Remarks
	Panel tuning mode	PC test mode	Test-equipment	Unit	Terminal	Unit	Parts	Method	
1. Setting	1) DC voltage: 7.5V 2) SSG standard modulation [Wide 5k] MOD: 1kHz, DEV: 3kHz [Wide 4k] MOD: 1kHz, DEV: 2.4kHz [Narrow] MOD: 1kHz, DEV: 1.5kHz								
2. LCD contrast	1) Adj item: [CNTR] Adjust: [✱✱✱] Press [<] key to store the adjustment value.	1) Adj item: [LCD Contrast] Press [Apply] button to store the adjustment value.				Panel	[Panel tuning mode] [∧], [∨] [PC test mode] [◀],[▶]	Adjust the LCD contrast by looking.	This item is needed when the LCD ASSY (B38-0923-05) is replaced.
3. Counter-clockwise Volume	1) Adj item: [VOL1] Adjust: [✱✱✱]	1) Adj item: [Counter-clockwise Volume]						[Panel tuning mode] Turn the volume knob counterclockwise fully. Press [<] key to store the adjustment value. [PC test mode] Turn the volume knob counterclockwise fully. Press [Apply] button to store the adjustment value.	This item is needed when the variable resistor (R31-0666-05) is replaced.

ADJUSTMENT

Item	Condition		Measurement			Adjustment			Specifications / Remarks
	Panel tuning mode	PC test mode	Test-equipment	Unit	Terminal	Unit	Parts	Method	
4. Clockwise Volume	1) Adj item: [VOL2] Adjust: [✳✳✳]	1) Adj item: [Clockwise Volume]				Panel		[Panel tuning mode] Turn the volume knob clockwise fully. Press [<] key to store the adjustment value. [PC test mode] Turn the volume knob clockwise fully. Press [Apply] button to store the adjustment value.	This item is needed when the variable resistor (R31-0666-05) is replaced.
5. Receive Assist	1) Adj item: [RAST] Adjust: [✳✳✳✳] 2) Adj item: [L RAST]→ [L' RAST]→ [C RAST]→ [H' RAST]→ [H RAST] Adjust: [✳✳✳✳] Press [<] key to store the adjustment value.	1) Adj item: [Receive Assist] 2) Adj item: [Low], [Low'], [Center], [High'], [High] Press [Apply All] button to store the adjustment value.					[Panel tuning mode] [⌃], [⌄] [PC test mode] [◀],[▶]	The sub LCD display and [V] indicator on the PC window shows VCO lock voltage. Change the adjustment value to get VCO lock voltage within the limit of the specified voltage. **Note:** Confirm the VCO lock voltage approximately 3 seconds after the adjustment value is changed.	2.5V±0.1V [PC test mode] Press [Apply All] button to store the adjustment value after all adjustment point was adjusted.
Transmit Assist	1) Adj item: [TAST] Adjust: [✳✳✳✳] 2) Adj item: [L TAST]→ [L' TAST]→ [C TAST]→ [H' TAST]→ [H TAST] Adjust: [✳✳✳✳] PTT : ON (RF power is not output.) Press [<] key to store the adjustment value.	1) Adj item: [Transmit Assist] 2) Adj item: [Low], [Low'], [Center], [High'], [High] PTT: Press [Transmit] button. Press [Apply All] button to store the adjustment value.							
6. RTC oscillation frequency adjust	1) Adj item: [RTC] Adjust: [✳✳✳]	1) Adj item: [RTC (Real-time clock)]					[Side1]	[Panel tuning mode] Press [Side1] key. After automatic adjustment adjusted value is displayed on the LCD. Press [<] key to store the adjustment value. [PC test mode] Press [Start] button of "Auto Tuning". Press [Apply] button to store the adjustment value after the automatic adjustment was finished.	

ADJUSTMENT

Item	Condition		Measurement			Adjustment			Specifications / Remarks
	Panel tuning mode	PC test mode	Test-equipment	Unit	Terminal	Unit	Parts	Method	
7. Frequency adjust	* The Frequency adjustment can be performed only in PC test mode.	1) Adj item: [Frequency] SSG output : –20dBm (22.4mV) (CW (without modulation)) **Caution:** Perform the frequency adjustment under the following conditions. • Temperature range of +23˚C to +27˚C (+73.4˚F to +80.6˚F). (The temperature is displayed on the Frequency adjustment screen of the KPG-111D and the LCD of the transceiver.) • Use an accuracy of 0.003ppm for the SSG. (Use a standard oscillator if necessary.)	SSG	Panel	ANT	Panel	[Side1]	[PC test mode] Press [Start] button of "Auto Tuning". Press [Apply] button to store the adjustment value after the automatic adjustment was finished.	[PC test mode] The value of "IF20" will become around "0" after the adjustment was finished. Remark: "Frequency" is adjusted under receiving condition with SSG.

Transmitter Section

Item	Condition		Measurement			Adjustment			Specifications / Remarks
	Panel tuning mode	PC test mode	Test-equipment	Unit	Terminal	Unit	Parts	Method	
1. High Transmit Power adjust (Batt: 7.5V)	1) Adj item: [HIPWR] Adjust: [✱✱✱✱] 2) Adj item: [L HIPWR]→ [L' HIPWR]→ [C HIPWR]→ [H' HIPWR]→ [H HIPWR] Adjust: [✱✱✱✱] PTT: ON Press [<] key to store the adjustment value.	1) Adj item: [High Transmit Power] 2) Adj item: [Low], [Low'], [Center], [High'], [High] PTT: Press [Transmit] button. Press [Apply All] button to store the adjustment value.	Power meter Ammeter	Panel	ANT	Panel	[Panel tuning mode] [∧], [∨] [PC test mode] [◀],[▶]	5.0W	±0.2W 2.0A or less [PC test mode] Press [Apply All] button to store the adjustment value after all adjustment point was adjusted.
2. Low Transmit Power adjust (Batt: 7.5V)	1) Adj item: [LOPWR] Adjust: [✱✱✱✱] 2) Adj item: [L LOPWR]→ [L' LOPWR]→ [C LOPWR]→ [H' LOPWR]→ [H LOPWR] Adjust: [✱✱✱✱] PTT: ON Press [<] key to store the adjustment value.	1) Adj item: [Low Transmit Power] 2) Adj item: [Low], [Low'], [Center], [High'], [High] PTT: Press [Transmit] button. Press [Apply All] button to store the adjustment value.						0.8W	±0.1W 1.0A or less [PC test mode] Press [Apply All] button to store the adjustment value after all adjustment point was adjusted.

ADJUSTMENT

Item	Condition		Measurement			Adjustment			Specifications / Remarks
	Panel tuning mode	PC test mode	Test-equipment	Unit	Terminal	Unit	Parts	Method	
3. Balance adjust *2	1) Adj item: [BAL] Adjust: [✳✳✳] Deviation meter LPF: 3kHz HPF: OFF 2) Adj item: [L BAL]→ [L' BAL]→ [C BAL]→ [H' BAL]→ [H BAL] Adjust: [✳✳✳] PTT: ON Press [<] key to store the adjustment value. Sub LCD: Tone frequency [Side1] key: Press while transmitting to change 20Hz and 2kHz.	1) Adj item: [Balance] Deviation meter LPF : 3kHz HPF : OFF 2) Adj item: [Low], [Low'], [Center], [High'], [High] PTT: Press [Transmit] button. Press [Apply All] button to store the adjustment value. [2kHz Sine Wave Check box]: Check while transmitting change to 2kHz.	Deviation meter Oscilloscope	Panel	ANT	Panel	[Panel tuning mode] [⌃], [⌄] [PC test mode] [◀],[▶]	The Deviation of 20Hz frequency is fixed. Change the 2kHz adjustment value to become the same deviation of 20Hz within the specified range.	2kHz Tone deviation is within ±1.0% of 20Hz tone deviation. [PC test mode] Press [Apply All] button to store the adjustment value after all adjustment point was adjusted.
*2: Refer to the "Necessary Deviation adjustment item for each signaling and mode" table on page 61. Balance adjustment is common with the adjustment of all signaling deviations.									
4. Maximum Deviation (NXDN) adjust *3 [Narrow]	1) Adj item: [Nn NDEV] Adjust: [✳✳✳✳] Deviation meter LPF: 3kHz HPF: OFF 2) Adj item: [NnL NDEV]→ [NnL' NDEV]→ [NnC NDEV]→ [NnH' NDEV]→ [NnH NDEV] Adjust: [✳✳✳✳] PTT: ON Press [<] key to store the adjustment value.	1) Adj item: [Maximum Deviation (NXDN Narrow)] Deviation meter LPF: 3kHz HPF: OFF 2) Adj item: [Low], [Low'], [Center], [High'], [High] PTT: Press [Transmit] button. Press [Apply All] button to store the adjustment value.	Deviation meter Oscilloscope	Panel	ANT	Panel	[Panel tuning mode] [⌃], [⌄] [PC test mode] [◀],[▶]	3056Hz	2995~3117Hz [PC test mode] Press [Apply All] button to store the adjustment value after all adjustment point was adjusted.
[Very Narrow]	1) Adj item: [Nv NDEV] Adjust: [✳✳✳✳] 2) Adj item: [NvL NDEV]→ [NvL' NDEV]→ [NvC NDEV]→ [NvH' NDEV]→ [NvH NDEV] Adjust: [✳✳✳✳] PTT: ON Press [<] key to store the adjustment value.	1) Adj item: [Maximum Deviation (NXDN Very Narrow)] 2) Adj item: [Low], [Low'], [Center], [High'], [High] PTT: Press [Transmit] button. Press [Apply All] button to store the adjustment value.						1337Hz	1311~1363Hz [PC test mode] Press [Apply All] button to store the adjustment value after all adjustment point was adjusted.

ADJUSTMENT

Item	Condition		Measurement			Adjustment			Specifications / Remarks
	Panel tuning mode	PC test mode	Test-equipment	Unit	Terminal	Unit	Parts	Method	
5. Maximum Deviation (Analog) adjust *3 [Narrow]	1) Adj item: [An ADEV] Adjust: [∗∗∗∗] Deviation meter LPF: 15kHz HPF: OFF 2) Adj item: [AnL ADEV]→ [AnL' ADEV]→ [AnC ADEV]→ [AnH' ADEV]→ [AnH ADEV] Adjust: [∗∗∗∗] Press [<] key to store the adjustment value.	1) Adj item: [Maximum Deviation (Analog Narrow)] Deviation meter LPF: 15kHz HPF: OFF 2) Adj item: [Low], [Low'], [Center], [High'], [High] Press [Apply All] button to store the adjustment value.	Deviation meter Oscilloscope	Panel	ANT	Panel	[Panel tuning mode] [∧], [∨] [PC test mode] [◀],[▶]	Write the same adjustment value of "NXDN Deviation [Narrow]" for each adjustment point. Transmit at each adjustment point and check that the Analog deviation is between 2050Hz and 2150Hz. Deviation meter LPF: 15kHz HPF: OFF [Panel tuning mode] PTT: ON [PC test mode] PTT: Press [Transmit] button	2050~2150Hz [PC test mode] Press [Apply All] button to store the adjustment value after all adjustment point was adjusted.
[Wide 4k]	1) Adj item: [As ADEV] Adjust: [∗∗∗∗] 2) Adj item: [AsL ADEV]→ [AsL' ADEV]→ [AsC ADEV]→ [AsH' ADEV]→ [AsH ADEV] Adjust: [∗∗∗∗] Press [<] key to store the adjustment value.	1) Adj item: [Maximum Deviation (Analog Wide 4k)] 2) Adj item: [Low], [Low'], [Center], [High'], [High] Press [Apply All] button to store the adjustment value.						Write the same adjustment value of "NXDN Deviation [Narrow]" for each adjustment point. Transmit at each adjustment point and check that the Analog deviation is between 3310Hz and 3410Hz. Deviation meter LPF: 15kHz HPF: OFF [Panel tuning mode] PTT: ON [PC test mode] PTT: Press [Transmit] button	3310~3410Hz [PC test mode] Press [Apply All] button to store the adjustment value after all adjustment point was adjusted.
[Wide 5k]	1) Adj item: [Aw ADEV] Adjust: [∗∗∗∗] 2) Adj item: [AwL ADEV]→ [AwL' ADEV]→ [AwC ADEV]→ [AwH' ADEV]→ [AwH ADEV] Adjust: [∗∗∗∗] Press [<] key to store the adjustment value.	1) Adj item: [Maximum Deviation (Analog Wide 5k)] 2) Adj item: [Low], [Low'], [Center], [High'], [High] Press [Apply All] button to store the adjustment value.						Write the same adjustment value of "NXDN Deviation [Narrow]" for each adjustment point. Transmit at each adjustment point and check that the Analog deviation is between 4150Hz and 4250Hz. Deviation meter LPF: 15kHz HPF: OFF [Panel tuning mode] PTT: ON [PC test mode] PTT: Press [Transmit] button	4150~4250Hz [PC test mode] Press [Apply All] button to store the adjustment value after all adjustment point was adjusted.

*3: Refer to the "Necessary Deviation adjustment item for each signaling and mode" table on page 61.
Regarding Maximum Deviation (Analog), it is common with the adjustment of all analog signalings.

ADJUSTMENT

Item	Condition		Measurement			Adjustment			Specifications / Remarks
	Panel tuning mode	PC test mode	Test-equipment	Unit	Terminal	Unit	Parts	Method	
6. QT Deviation adjust *4 [Narrow]	1) Adj item: [An QT] Adjust: [✳✳✳✳] Deviation meter LPF: 3kHz HPF: OFF PTT: ON Press [<] key to store the adjustment value.	1) Adj item: [QT Deviation (Analog Narrow)] Deviation meter LPF: 3kHz HPF: OFF PTT: Press [Transmit] button. Press [Apply] button to store the adjustment value.	Deviation meter Oscilloscope	Panel	ANT	Panel	[Panel tuning mode] [∧], [∨] [PC test mode] [◀],[▶]	Write the value as followings. 513 (Reference value)	0.35kHz±0.05kHz
[Wide 4k]	1) Adj item: [As QT] Adjust: [✳✳✳✳] PTT: ON Press [<] key to store the adjustment value.	1) Adj item: [QT Deviation (Analog Wide 4k)] PTT: Press [Transmit] button. Press [Apply] button to store the adjustment value.							0.60kHz±0.05kHz
[Wide 5k]	1) Adj item: [Aw QT] Adjust: [✳✳✳✳] PTT: ON Press [<] key to store the adjustment value.	1) Adj item: [QT Deviation (Analog Wide 5k)] PTT: Press [Transmit] button. Press [Apply] button to store the adjustment value.							0.75kHz±0.05kHz
7. DQT Deviation adjust *4 [Narrow]	1) Adj item: [An DQT] Adjust: [✳✳✳✳] Deviation meter LPF: 3kHz HPF: OFF PTT: ON Press [<] key to store the adjustment value.	1) Adj item: [DQT Deviation (Analog Narrow)] Deviation meter LPF: 3kHz HPF: OFF PTT: Press [Transmit] button. Press [Apply] button to store the adjustment value.						Write the value as followings. 415 (Reference value)	0.35kHz±0.05kHz
[Wide 4k]	1) Adj item: [As DQT] Adjust: [✳✳✳✳] PTT: ON Press [<] key to store the adjustment value.	1) Adj item: [DQT Deviation (Analog Wide 4k)] PTT: Press [Transmit] button. Press [Apply] button to store the adjustment value.							0.60kHz±0.05kHz
[Wide 5k]	1) Adj item: [Aw DQT] Adjust: [✳✳✳✳] PTT: ON Press [<] key to store the adjustment value.	1) Adj item: [DQT Deviation (Analog Wide 5k)] PTT: Press [Transmit] button. Press [Apply] button to store the adjustment value.							0.75kHz±0.05kHz

ADJUSTMENT

Item	Condition		Measurement			Adjustment			Specifications / Remarks
	Panel tuning mode	PC test mode	Test-equipment	Unit	Terminal	Unit	Parts	Method	
8. LTR Deviation adjust *4 [Narrow]	1) Adj item: [An LTR] Adjust: [∗∗∗∗] Deviation meter LPF: 3kHz HPF: OFF PTT: ON Press [<] key to store the adjustment value.	1) Adj item: [LTR Deviation (Analog Narrow)] Deviation meter LPF: 3kHz HPF: OFF PTT: Press [Transmit] button. Press [Apply] button to store the adjustment value.	Deviation meter Oscilloscope	Panel	ANT	Panel	[Panel tuning mode] [∧], [∨] [PC test mode] [◀],[▶]	Write the value as followings. 465 (Reference value)	0.75kHz±0.05kHz
[Wide]	1) Adj item: [Aw LTR] Adjust: [∗∗∗∗] PTT: ON Press [<] key to store the adjustment value.	1) Adj item: [LTR Deviation (Analog Wide)] PTT: Press [Transmit] button. Press [Apply] button to store the adjustment value.							1.00kHz±0.05kHz
9. DTMF Deviation adjust *4 [Narrow]	1) Adj item: [An DTMF] Adjust: [∗∗∗∗] Deviation meter LPF: 15kHz HPF: OFF PTT: ON Press [<] key to store the adjustment value.	1) Adj item: [DTMF Deviation (Analog Narrow)] Deviation meter LPF: 15kHz HPF: OFF PTT: Press [Transmit] button. Press [Apply] button to store the adjustment value.						Write the value as followings. 540 (Reference value)	1.25kHz±0.05kHz
[Wide 4k]	1) Adj item: [As DTMF] Adjust: [∗∗∗∗] PTT: ON Press [<] key to store the adjustment value.	1) Adj item: [DTMF Deviation (Analog Wide 4k)] PTT: Press [Transmit] button. Press [Apply] button to store the adjustment value.							2.00kHz±0.05kHz
[Wide 5k]	1) Adj item: [Aw DTMF] Adjust: [∗∗∗∗] PTT: ON Press [<] key to store the adjustment value.	1) Adj item: [DTMF Deviation (Analog Wide 5k)] PTT: Press [Transmit] button. Press [Apply] button to store the adjustment value.							2.50kHz±0.05kHz

ADJUSTMENT

Item	Condition		Measurement			Adjustment			Specifications / Remarks
	Panel tuning mode	PC test mode	Test-equipment	Unit	Terminal	Unit	Parts	Method	
10. Single Tone Deviation adjust *4 [Narrow]	1) Adj item: [An TONE] Adjust: [✳✳✳✳] Deviation meter LPF: 15kHz HPF: OFF PTT: ON Press [<] key to store the adjustment value.	1) Adj item: [Single Tone Deviation (Analog Narrow)] Deviation meter LPF: 15kHz HPF: OFF PTT: Press [Transmit] button. Press [Apply] button to store the adjustment value.	Deviation meter Oscilloscope	Panel	ANT	Panel	[Panel tuning mode] [∧], [∨] [PC test mode] [◀],[▶]	Write the value as followings. 513 (Reference value)	1.50kHz±0.05kHz
[Wide 4k]	1) Adj item: [As TONE] Adjust: [✳✳✳✳] PTT: ON Press [<] key to store the adjustment value.	1) Adj item: [Single Tone Deviation (Analog Wide 4k)] PTT: Press [Transmit] button. Press [Apply] button to store the adjustment value.							2.40kHz±0.05kHz
[Wide 5k]	1) Adj item: [Aw TONE] Adjust: [✳✳✳✳] PTT: ON Press [<] key to store the adjustment value.	1) Adj item: [Single Tone Deviation (Analog Wide 5k)] PTT: Press [Transmit] button. Press [Apply] button to store the adjustment value.							3.00kHz±0.05kHz
11. MSK Deviation adjust *4 [Narrow]	1) Adj item: [An MSK] Adjust: [✳✳✳✳] Deviation meter LPF: 15kHz HPF: OFF PTT: ON Press [<] key to store the adjustment value.	1) Adj item: [MSK Deviation (Analog Narrow)] Deviation meter LPF: 15kHz HPF: OFF PTT: Press [Transmit] button. Press [Apply] button to store the adjustment value.						Write the value as followings. 513 (Reference value)	1.50kHz±0.05kHz
[Wide 4k]	1) Adj item: [As MSK] Adjust: [✳✳✳✳] PTT: ON Press [<] key to store the adjustment value.	1) Adj item: [MSK Deviation (Analog Wide 4k)] PTT: Press [Transmit] button. Press [Apply] button to store the adjustment value.							2.40kHz±0.05kHz
[Wide 5k]	1) Adj item: [Aw MSK] Adjust: [✳✳✳✳] PTT: ON Press [<] key to store the adjustment value.	1) Adj item: [MSK Deviation (Analog Wide 5k)] PTT: Press [Transmit] button. Press [Apply] button to store the adjustment value.							3.00kHz±0.05kHz

ADJUSTMENT

Item	Condition		Measurement			Adjustment			Specifications / Remarks
	Panel tuning mode	PC test mode	Test-equipment	Unit	Terminal	Unit	Parts	Method	
12. CWID Deviation adjust *4 [Very Narrow]	1) Adj item: [Nv CWID] Adjust: [∗∗∗∗] Deviation meter LPF: 15kHz HPF: OFF PTT: ON Press [<] key to store the adjustment value.	1) Adj item: [CW ID Deviation (NXDN Very Narrow)] Deviation meter LPF: 15kHz HPF: OFF PTT: Press [Transmit] button. Press [Apply] button to store the adjustment value.	Deviation meter Oscilloscope	Panel	ANT	Panel	[Panel tuning mode] [∧], [∨] [PC test mode] [◀],[▶]	Write the value as followings. 376 (Reference value)	1.00kHz±0.10kHz
*4: Refer to the "Necessary Deviation adjustment item for each signaling and mode" table on page 61.									
13. VOX1 adjust	1) Adj item: [VOX1] Adjust: [∗∗∗] AG: 1kHz/45mV at MIC terminal	1) Adj item: [VOX1] AG: 1kHz/45mV at MIC terminal	AG	Panel	Universal connector			[Panel tuning mode] After apply signal from AG, press [<] key to store the adjustment value. [PC test mode] After apply signal from AG, press [Apply] button to store the adjustment value.	
14. VOX10 adjust	1) Adj item: [VOX10] Adjust: [∗∗∗] AG: 1kHz/3mV at MIC terminal	1) Adj item: [VOX10] AG: 1kHz/3mV at MIC terminal							
15. BATT detection writing	1) Adj item: [BATT] Adjust: [∗∗∗] PTT: ON	1) Adj item:[Battery Warning Level] PTT: Press [Transmit] button.	Power meter DVM	Panel	ANT BATT terminal			Press the PTT switch or [Transmit] button on the PC window. Apply 6.20V to battery terminal. Confirm that one pre-determined numeric in the range 1 to 256 appears. [Panel tuning mode] Press [<] key to store the adjustment value. [PC test mode] Press [Apply] button to store the adjustment value.	
16. BATT detection check	[Panel test mode] 1) CH-Sig: 1-1 BATT terminal voltage: 6.0V while transmitting	1) Test Channel Channel: 1 Test Signaling Mode: Analog Signaling: 1 BATT terminal voltage: 6.0V while transmitting						Check	The transceiver can transmit with causing the LED to blink.

ADJUSTMENT

■ Necessary Deviation adjustment item for each signaling and mode

The following shows the necessary adjustment items for each signaling deviation. Please read the following table like the following example. In the case of the signaling "QT (Wide 5k)", this signaling is composed of three elements [Balance, Maximum Deviation (Analog Wide 5k) and QT Deviation (Wide 5k)]. Please adjust Balance and Maximum Deviation (Analog Wide 5k) before adjusting QT Deviation (Wide 5k).

Mode	Signaling	Necessary adjustment and order			
		Wide 5k	Wide 4k	Narrow	Very Narrow
Analog	Audio	Step1. Balance adjust Step2. Maximum Deviation (Analog Wide 5k)	Step1. Balance adjust Step2. Maximum Deviation (Analog Wide 4k)	Step1. Balance adjust Step2. Maximum Deviation (Analog Narrow)	-
	QT	Step1. Balance adjust Step2. Maximum Deviation (Analog Wide 5k) Step3. QT Deviation (Wide 5k)	Step1. Balance adjust Step2. Maximum Deviation (Analog Wide 4k) Step3. QT Deviation (Wide 4k)	Step1. Balance adjust Step2. Maximum Deviation (Analog Narrow) Step3. QT Deviation (Narrow)	-
	DQT	Step1. Balance adjust Step2. Maximum Deviation (Analog Wide 5k) Step3. DQT Deviation (Wide 5k)	Step1. Balance adjust Step2. Maximum Deviation (Analog Wide 4k) Step3. DQT Deviation (Wide 4k)	Step1. Balance adjust Step2. Maximum Deviation (Analog Narrow) Step3. DQT Deviation (Narrow)	-
	LTR	Step1. Balance adjust Step2. Maximum Deviation (Analog Wide) Step3. LTR Deviation (Wide)	-	Step1. Balance adjust Step2. Maximum Deviation (Analog Narrow) Step3. LTR Deviation (Narrow)	-
	DTMF	Step1. Balance adjust Step2. Maximum Deviation (Analog Wide 5k) Step3. DTMF Deviation (Wide 5k)	Step1. Balance adjust Step2. Maximum Deviation (Analog Wide 4k) Step3. DTMF Deviation (Wide 4k)	Step1. Balance adjust Step2. Maximum Deviation (Analog Narrow) Step3. DTMF Deviation (Narrow)	-
	2TONE	Step1. Balance adjust Step2. Maximum Deviation (Analog Wide 5k) Step3. Single Tone Deviation (Analog Wide 5k)	Step1. Balance adjust Step2. Maximum Deviation (Analog Wide 4k) Step3. Single Tone Deviation (Analog Wide 4k)	Step1. Balance adjust Step2. Maximum Deviation (Analog Narrow) Step3. Single Tone Deviation (Analog Narrow)	-
	MSK (FleetSync)	Step1. Balance adjust Step2. Maximum Deviation (Analog Wide 5k) Step3. MSK Deviation (Analog Wide 5k)	Step1. Balance adjust Step2. Maximum Deviation (Analog Wide 4k) Step3. MSK Deviation (Analog Wide 4k)	Step1. Balance adjust Step2. Maximum Deviation (Analog Narrow) Step3. MSK Deviation (Analog Narrow)	-
NXDN	Audio	-	-	Step1. Balance adjust Step2. Maximum Deviation (NXDN Narrow)	Step1. Balance adjust Step2. Maximum Deviation (NXDN Very Narrow)
	CWID	-	-	-	Step1. Balance adjust Step2. Maximum Deviation (Analog Narrow) Step3. CWID Deviation (NXDN Very Narrow)

- Balance is common with all the above deviation adjustments. If Balance (Transmitter Section 3) has already adjusted, please skip Step1 and adjust from Step2.
- Maximum Deviation (Analog Wide 5k/Wide 4k/Narrow) is common with all the analog signaling deviations and CWID Deviation (NXDN Very Narrow). If Balance and Maximum Deviation (Analog Wide 5k/Wide 4k/Narrow) (Transmitter Section 5) have already adjusted, please skip Step2 and adjust from Step3.

ADJUSTMENT

Receiver Section

Item	Condition		Measurement			Adjustment			Specifications / Remarks
	Panel tuning mode	PC test mode	Test-equipment	Unit	Terminal	Unit	Parts	Method	
1. AF level setting	[Panel test mode] 1) CH-Sig: 1-1 SSG output: –47dBm (1mV) (MOD: 1kHz/±1.5kHz) Wide 5k/Wide 4k/ Narrow: Narrow Beat Shift: Uncheck Compander: Uncheck	1) Test Channel Channel: 1 Test Signaling Mode: Analog Signaling: 1 Wide 5k/Wide 4k/ Narrow: Narrow Beat Shift: Uncheck Compander: Uncheck SSG output: –47dBm (1mV) (MOD: 1kHz/±1.5kHz)	SSG DVM AF VTVM Dummy load	Panel	ANT Universal connector	Panel	Volume knob	Turn the Volume knob to obtain 0.63V AF output.	0.63V±0.1V
2. Sensitivity 1 adjust	1) Adj item: [SENS1] Adjust: [∗∗∗] 2) Adj item: [L SENS1]→ [L' SENS1]→ [C SENS1]→ [H' SENS1]→ [H SENS1] Adjust: [∗∗∗] Press [<] key to store the adjustment value.	1) Adj item: [Sensitivity 1] 2) Adj item: [Low], [Low'], [Center], [High'], [High] Press [Apply All] button to store the adjustment value.	SSG AF VTVM Oscilloscope	Panel	ANT Universal connector	Panel	[Panel tuning mode] [∧], [∨] [PC test mode] [◀],[▶]	Write the value as followings [L SENS1] / [Low] : 10 (Preset) [L' SENS1] / [Low'] : 50 (Preset) [C SENS1] / [Center] : 95 (Fixed) [H' SENS1] / [High'] : 135 (Fixed) [H SENS1] / [High] : 180 (Fixed)	
	3) Adj item: [L SENS1]→ [L' SENS1]	3) Adj item: [Low], [Low']						Increase the adjustment value from the preset value to get the maximum RSSI level.	
	Caution: Perform the step 2 adjustments of "3. Sensitivity 2 adjust" before performing the [L SENS1] / [L' SENS1] adjustment.								
	Adjust: [∗∗∗] SSG output: –90dBm (7.08μV) (MOD: 1kHz/±1.5kHz) Press [<] key to store the adjustment value.	Press [Apply All] button to store the adjustment value.							
3. Sensitivity 2 adjust	1) Adj item: [SENS2] Adjust: [∗∗∗] 2) Adj item: [L SENS2]→ [L' SENS2]→ [C SENS2]→ [H' SENS2]→ [H SENS2] Adjust: [∗∗∗] Press [<] key to store the adjustment value.	1) Adj item: [Sensitivity 2] 2) Adj item: [Low], [Low'], [Center], [High'], [High] Press [Apply All] button to store the adjustment value.						Write the value as followings [L SENS2] / [Low] : 256 (Preset) [L' SENS2] / [Low'] : 256 (Preset) [C SENS2] / [Center] : 256 (Preset) [H' SENS2] / [High'] : 256 (Preset) [H SENS2] / [High] : 256 (Preset)	

ADJUSTMENT

Item	Condition		Measurement			Adjustment			Specifications / Remarks
	Panel tuning mode	PC test mode	Test-equipment	Unit	Terminal	Unit	Parts	Method	
3. Sensitivity 2 adjust	3) Adj item: [L SENS2]→ [L' SENS2]→ [C SENS2]→ [H' SENS2]→ [H SENS2] Adjust: [✳✳✳] SSG output: –118dBm (0.28μV) (MOD: 1kHz/±1.5kHz) Press [<] key to store the adjustment value.	3) Adj item: [Low], [Low'], [Center], [High'], [High] Press [Apply All] button to store the adjustment value.	SSG AF VTVM Oscilloscope	Panel	ANT Universal connector	Panel	[Panel tuning mode] [∧], [∨] [PC test mode] [◀],[▶]	Decrease the adjustment value from preset value (256) to get 12dB SINAD.	
4. RSSI reference adjust *5 [Analog Narrow]	1) Adj item: [An RRSSI] Adjust: [✳✳✳] 2) Adj item: [AnL RRSSI]→ [AnL' RRSSI]→ [AnC RRSSI]→ [AnH' RRSSI]→ [AnH RRSSI] Adjust: [✳✳✳] SSG output: 12dB SINAD level –3dB (MOD: 1kHz/±1.5kHz)	1) Adj item: [RSSI Reference (Analog Narrow)] 2) Adj item: [Low], [Low'], [Center], [High'], [High] SSG output: 12dB SINAD level –3dB (MOD: 1kHz/±1.5kHz)	SSG Distortion meter Oscilloscope					[Panel tuning mode] After input signal from SSG, press [<] key to store the adjustment value. [PC test mode] After input signal from SSG, press [Apply] button to store the adjustment value.	
[Analog Wide 4k]	1) Adj item: [As RRSSI] Adjust: [✳✳✳] 2) Adj item: [AsL RRSSI]→ [AsL' RRSSI]→ [AsC RRSSI]→ [AsH' RRSSI]→ [AsH RRSSI] Adjust: [✳✳✳] SSG output: 12dB SINAD level –3dB (MOD: 1kHz/±2.4kHz)	1) Adj item: [RSSI Reference (Analog Wide 4k)] 2) Adj item: [Low], [Low'], [Center], [High'], [High] SSG output: 12dB SINAD level –3dB (MOD: 1kHz/±2.4kHz)							
[Analog Wide 5k]	1) Adj item: [Aw RRSSI] Adjust: [✳✳✳] 2) Adj item: [AwL RRSSI]→ [AwL' RRSSI]→ [AwC RRSSI]→ [AwH' RRSSI]→ [AwH RRSSI] Adjust: [✳✳✳] SSG output: 12dB SINAD level –3dB (MOD: 1kHz/±3kHz)	1) Adj item: [RSSI Reference (Analog Wide 5k)] 2) Adj item: [Low], [Low'], [Center], [High'], [High] SSG output: 12dB SINAD level –3dB (MOD: 1kHz/±3kHz)							

ADJUSTMENT

Item	Condition		Measurement			Adjustment			Specifications / Remarks
	Panel tuning mode	PC test mode	Test-equipment	Unit	Terminal	Unit	Parts	Method	
RSSI reference adjust *5 [NXDN Very Narrow]	1) Adj item: [Nv RRSSI] Adjust: [✱✱✱] 2) Adj item: [NvL RRSSI]→ [NvL' RRSSI]→ [NvC RRSSI]→ [NvH' RRSSI]→ [NvH RRSSI] Adjust: [✱✱✱] SSG output: 12dB SINAD level for Analog Narrow –3dB (MOD: 1kHz/±1.5kHz)	1) Adj item: [RSSI Reference (NXDN Very Narrow)] 2) Adj item: [Low], [Low'], [Center], [High'], [High] SSG output: 12dB SINAD level for Analog Narrow –3dB (MOD: 1kHz/±1.5kHz)	SSG Distortion meter Oscilloscope	Panel	ANT Universal connector			[Panel tuning mode] After input signal from SSG, press [<] key to store the adjustment value. [PC test mode] After input signal from SSG, press [Apply] button to store the adjustment value.	Adjust with the analog signal.
*5: Because RSSI reference (NXDN Narrow) is adjusted by adjusting RSSI reference (Analog Narrow), it is not necessary to adjust RSSI reference (NXDN Narrow).									
5. Open Squelch adjust *6 (Squelch level 5 adjust) [Analog Narrow]	1) Adj item: [An SQL] Adjust: [✱✱✱] 2) Adj item: [AnL SQL]→ [AnL' SQL]→ [AnC SQL]→ [AnH' SQL]→ [AnH SQL] Adjust: [✱✱✱] SSG output: 12dB SINAD level (MOD: 1kHz/±1.5kHz)	1) Adj item: [Open Squelch (Analog Narrow)] 2) Adj item: [Low], [Low'], [Center], [High'], [High] SSG output: 12dB SINAD level (MOD: 1kHz/±1.5kHz)	SSG Distortion meter Oscilloscope	Panel	ANT Universal connector			[Panel tuning mode] After input signal from SSG, press [<] key to store the adjustment value. [PC test mode] After input signal from SSG, press [Apply] button to store the adjustment value.	"Open Squelch" will not be adjusted correctly if MOD and Deviation are wrong.
[Analog Wide 4k]	1) Adj item: [As SQL] Adjust: [✱✱✱] 2) Adj item: [AsL SQL]→ [AsL' SQL]→ [AsC SQL]→ [AsH' SQL]→ [AsH SQL] Adjust: [✱✱✱] SSG output: 12dB SINAD level (MOD: 1kHz/±2.4kHz)	1) Adj item: [Open Squelch (Analog Wide 4k)] 2) Adj item: [Low], [Low'], [Center], [High'], [High] SSG output: 12dB SINAD level (MOD: 1kHz/±2.4kHz)							
[Analog Wide 5k]	1) Adj item: [Aw SQL] Adjust: [✱✱✱] 2) Adj item: [AwL SQL]→ [AwL' SQL]→ [AwC SQL]→ [AwH' SQL]→ [AwH SQL] Adjust: [✱✱✱] SSG output: 12dB SINAD level (MOD: 1kHz/±3kHz)	1) Adj item: [Open Squelch (Analog Wide 5k)] 2) Adj item: [Low], [Low'], [Center], [High'], [High] SSG output: 12dB SINAD level (MOD: 1kHz/±3kHz)							

ADJUSTMENT

Item	Condition		Measurement			Adjustment			Specifications / Remarks
	Panel tuning mode	PC test mode	Test-equipment	Unit	Terminal	Unit	Parts	Method	
Open Squelch adjust *6 (Squelch level 5 adjust) [NXDN Very Narrow]	1) Adj item: [Nv SQL] Adjust: [✳✳✳] 2) Adj item: [NvL SQL]→ [NvL' SQL]→ [NvC SQL]→ [NvH' SQL]→ [NvH SQL] Adjust: [✳✳✳] SSG output: 12dB SINAD level for Analog Narrow –4dB (MOD: 400Hz/±1.1kHz)	1) Adj item: [Open Squelch (NXDN Very Narrow)] 2) Adj item: [Low], [Low'], [Center], [High'], [High] SSG output: 12dB SINAD level for Analog Narrow –4dB (MOD: 400Hz/±1.1kHz)	SSG Distortion meter Oscilloscope	Panel	ANT Universal connector			[Panel tuning mode] After input signal from SSG, press [<] key to store the adjustment value. [PC test mode] After input signal from SSG, press [Apply] button to store the adjustment value.	Adjust with the analog signal. This item is adjusted under the condition that MOD is "400Hz" and Deviation is "±1.1kHz" due to the circuit configuration.
*6: Because Open Squelch (NXDN Narrow) is adjusted by adjusting Open Squelch (Analog Narrow), it is not necessary to adjust Open Squelch (NXDN Narrow).									
6. Low RSSI at –118dBm adjust *7 [Analog Narrow]	1) Adj item: [An LRSSI] Adjust: [✳✳✳] 2) Adj item: [AnL LRSSI]→ [AnL' LRSSI]→ [AnC LRSSI]→ [AnH' LRSSI]→ [AnH LRSSI] Adjust: [✳✳✳] SSG output: –118dBm (0.28μV) (MOD: 1kHz/±1.5kHz)	1) Adj item: [Low RSSI (Analog Narrow)] 2) Adj item: [Low], [Low'], [Center], [High'], [High] SSG output: –118dBm (0.28μV) (MOD: 1kHz/±1.5kHz)	SSG	Panel	ANT Universal connector			[Panel tuning mode] After input signal from SSG, press [<] key to store the adjustment value. [PC test mode] After input signal from SSG, press [Apply] button to store the adjustment value.	
[Analog Wide 4k]	1) Adj item: [As LRSSI] Adjust: [✳✳✳] 2) Adj item: [AsL LRSSI]→ [AsL' LRSSI]→ [AsC LRSSI]→ [AsH' LRSSI]→ [AsH LRSSI] Adjust: [✳✳✳] SSG output: –118dBm (0.28μV) (MOD: 1kHz/±2.4kHz)	1) Adj item: [Low RSSI (Analog Wide 4k)] 2) Adj item: [Low], [Low'], [Center], [High'], [High] SSG output: –118dBm (0.28μV) (MOD: 1kHz/±2.4kHz)							
[Analog Wide 5k]	1) Adj item: [Aw LRSSI] Adjust: [✳✳✳] 2) Adj item: [AwL LRSSI]→ [AwL' LRSSI]→ [AwC LRSSI]→ [AwH' LRSSI]→ [AwH LRSSI] Adjust: [✳✳✳] SSG output: –118dBm (0.28μV) (MOD: 1kHz/±3kHz)	1) Adj item: [Low RSSI (Analog Wide 5k)] 2) Adj item: [Low], [Low'], [Center], [High'], [High] SSG output: –118dBm (0.28μV) (MOD: 1kHz/±3kHz)							

ADJUSTMENT

Item	Condition		Measurement			Adjustment			Specifications / Remarks
	Panel tuning mode	PC test mode	Test-equipment	Unit	Terminal	Unit	Parts	Method	
Low RSSI at –118dBm adjust *7 [NXDN Very Narrow]	1) Adj item: [Nv LRSSI] Adjust: [✳✳✳] 2) Adj item: [NvL LRSSI]→ [NvL' LRSSI]→ [NvC LRSSI]→ [NvH' LRSSI]→ [NvH LRSSI] Adjust: [✳✳✳] SSG output: –118dBm (0.28μV) (MOD: 1kHz/±1.5kHz)	1) Adj item: [Low RSSI (NXDN Very Narrow)] 2) Adj item: [Low], [Low'], [Center], [High'], [High] SSG output: –118dBm (0.28μV) (MOD: 1kHz/±1.5kHz)	SSG	Panel	ANT Universal connector			[Panel tuning mode] After input signal from SSG, press [<] key to store the adjustment value. [PC test mode] After input signal from SSG, press [Apply] button to store the adjustment value.	Adjust with the analog signal.
*7: Because Low RSSI at –118dBm (NXDN Narrow) is adjusted by adjusting Low RSSI at –118dBm (Analog Narrow), it is not necessary to adjust Low RSSI at –118dBm (NXDN Narrow).									
7. High RSSI at –80dBm adjust *8 [Analog Narrow]	1) Adj item: [An HRSSI] Adjust: [✳✳✳] 2) Adj item: [AnL HRSSI]→ [AnL' HRSSI]→ [AnC HRSSI]→ [AnH' HRSSI]→ [AnH HRSSI] Adjust: [✳✳✳] SSG output: –80dBm (22.4μV) (MOD: 1kHz/±1.5kHz)	1) Adj item: [High RSSI (Analog Narrow)] 2) Adj item: [Low], [Low'], [Center], [High'], [High] SSG output: –80dBm (22.4μV) (MOD: 1kHz/±1.5kHz)	SSG	Panel	ANT Universal connector			[Panel tuning mode] After input signal from SSG, press [<] key to store the adjustment value. [PC test mode] After input signal from SSG, press [Apply] button to store the adjustment value.	
[Analog Wide 4k]	1) Adj item: [As HRSSI] Adjust: [✳✳✳] 2) Adj item: [AsL HRSSI]→ [AsL' HRSSI]→ [AsC HRSSI]→ [AsH' HRSSI]→ [AsH HRSSI] Adjust: [✳✳✳] SSG output: –80dBm (22.4μV) (MOD: 1kHz/±2.4kHz)	1) Adj item: [High RSSI (Analog Wide 4k)] 2) Adj item: [Low], [Low'], [Center], [High'], [High] SSG output: –80dBm (22.4μV) (MOD: 1kHz/±2.4kHz)							
[Analog Wide 5k]	1) Adj item: [Aw HRSSI] Adjust: [✳✳✳] 2) Adj item: [AwL HRSSI]→ [AwL' HRSSI]→ [AwC HRSSI]→ [AwH' HRSSI]→ [AwH HRSSI] Adjust: [✳✳✳] SSG output: –80dBm (22.4μV) (MOD: 1kHz/±3kHz)	1) Adj item: [High RSSI (Analog Wide 5k)] 2) Adj item: [Low], [Low'], [Center], [High'], [High] SSG output: –80dBm (22.4μV) (MOD: 1kHz/±3kHz)							

ADJUSTMENT

Item	Condition		Measurement			Adjustment			Specifications / Remarks
	Panel tuning mode	PC test mode	Test-equipment	Unit	Terminal	Unit	Parts	Method	
High RSSI at –80dBm adjust *8 [NXDN Very Narrow]	1) Adj item: [Nv HRSSI] Adjust: [✳✳✳] 2) Adj item: [NvL HRSSI]→ [NvL' HRSSI]→ [NvC HRSSI]→ [NvH' HRSSI]→ [NvH HRSSI] Adjust: [✳✳✳] SSG output: –80dBm (22.4μV) (MOD: 1kHz/±1.5kHz)	1) Adj item: [High RSSI (NXDN Very Narrow)] 2) Adj item: [Low], [Low'], [Center], [High'], [High] SSG output: –80dBm (22.4μV) (MOD: 1kHz/±1.5kHz)	SSG	Panel	ANT Universal connector			[Panel tuning mode] After input signal from SSG, press [<] key to store the adjustment value. [PC test mode] After input signal from SSG, press [Apply] button to store the adjustment value.	Adjust with the analog signal.
*8: Because High RSSI at –80dBm (NXDN Narrow) is adjusted by adjusting High RSSI at –80dBm (Analog Narrow), it is not necessary to adjust High RSSI at –80dBm (NXDN Narrow).									
8. Tight Squelch adjust (Squelch level 9 adjust) [Analog Narrow]	1) Adj item: [An SQLT] Adjust: [✳✳✳] 2) Adj item: [AnL SQLT]→ [AnL' SQLT]→ [AnC SQLT]→ [AnH' SQLT]→ [AnH SQLT] Adjust: [✳✳✳] SSG output: 12dB SINAD level +5dB (MOD: 1kHz/±1.5kHz)	1) Adj item: [Tight Squelch (Analog Narrow)] 2) Adj item: [Low], [Low'], [Center], [High'], [High] SSG output: 12dB SINAD level +5dB (MOD: 1kHz/±1.5kHz)	SSG	Panel	ANT Universal connector			[Panel tuning mode] After input signal from SSG, press [<] key to store the adjustment value. [PC test mode] After input signal from SSG, press [Apply] button to store the adjustment value.	
[Analog Wide 4k]	1) Adj item: [As SQLT] Adjust: [✳✳✳] 2) Adj item: [AsL SQLT]→ [AsL' SQLT]→ [AsC SQLT]→ [AsH' SQLT]→ [AsH SQLT] Adjust: [✳✳✳] SSG output: 12dB SINAD level +5dB (MOD: 1kHz/±2.4kHz)	1) Adj item: [Tight Squelch (Analog Wide 4k)] 2) Adj item: [Low], [Low'], [Center], [High'], [High] SSG output: 12dB SINAD level +5dB (MOD: 1kHz/±2.4kHz)							
[Analog Wide 5k]	1) Adj item: [Aw SQLT] Adjust: [✳✳✳] 2) Adj item: [AwL SQLT]→ [AwL' SQLT]→ [AwC SQLT]→ [AwH' SQLT]→ [AwH SQLT] Adjust: [✳✳✳] SSG output: 12dB SINAD level +5dB (MOD: 1kHz/±3kHz)	1) Adj item: [Tight Squelch (Analog Wide 5k)] 2) Adj item: [Low], [Low'], [Center], [High'], [High] SSG output: 12dB SINAD level +5dB (MOD: 1kHz/±3kHz)							

TERMINAL FUNCTION

Control unit (X53-4260-XX)

Pin No.	Name	I/O	Function
CN1			
1	/CS	O	Chip select output
2	/RES	O	LCD reset output
3	A0	O	Address bus 0 output
4	/WR	O	WR bus output
5	D0	I/O	Data bus 0
6	D1	I/O	Data bus 1
7	D2	I/O	Data bus 2
8	D3	I/O	Data bus 3
9	D4	I/O	Data bus 4
10	D5	I/O	Data bus 5
11	D6	I/O	Data bus 6
12	D7	I/O	Data bus 7
13	VDD	O	3.3V LCD power supply output
14	VSS	-	GND
15	VDD	O	3.3V LCD power supply output
16	V1	-	LCD drive power supply
17	V2	-	LCD drive power supply
18	V3	-	LCD drive power supply
19	V4	-	LCD drive power supply
20	V5	O	LCD drive power supply
CN23			
1	ME	-	Internal MIC GND
2	EMC	I	Internal MIC input
3	SP+	O	BTL output + for internal speaker
4	SP+	O	BTL output + for internal speaker
5	SP-	O	BTL output – for internal speaker
6	SP-	O	BTL output – for internal speaker
7	6_/KEYI1	I	Key matrix input (KEYI1 for 6-key)
8	6_/KEYO2	O	Key matrix output (KEYO2 for 6-key)
9	BL_SB	O	LCD backlight voltage output
10	6_/KEYO0	O	Key matrix output (KEYO0 for 6-key)
11	6_/KEYO1	O	Key matrix output (KEYO1 for 6-key)
12	BL_SB	O	LCD backlight voltage output
13	6_/KEYI0	I	Key matrix input (KEYI0 for 6-key)
14	AGND	-	GND
CN403			
1	33A	O	3.3V for volume level
2	VOL_GND	-	GND for volume level
3	VOL	I	Volume level input for audio control
4	EN3	I	Rotary switch input
5	AGND	-	GND
6	EN4	I	Rotary switch input
7	EN1	I	Rotary switch input
8	EN2	I	Rotary switch input
9	+B	O	Power output after passing through the fuse
10	SB1	I	Power input after power switch
CN404			
1	LED_G	O	Green LED control output
2	/EMG	I	Emergency (Orange) key input
3	LED_R	O	Red LED control output
4	IFC	I	TX-RX PCB version recognition input
5	/SAVE	O	50C Reg. control output
6	I2CCK	O	TCXO thermometer clock output
7	/5TC	O	50T Reg. switch control output
8	I2CSDA	I/O	TCXO thermometer data input/output
9	SBC	O	SB3 switch control output
10	/T_R	O	TX/RX control output
11	TV2	O	RX tuning voltage 2 output
12	ASSIST	O	VCO tuning voltage output
13	TV1	O	RX tuning voltage 1 output
14	VAGC	I	AGC voltage input
15	5RC	O	50R switch control output
16	TCXO_MOD	O	TCXO modulation output
17	PGND	-	GND
18	RSSI	I	RSSI voltage input
19	PGND	-	GND
20	CV	I	CV voltage input
21	AGND	-	GND
22	NC	-	No connection
23	NC	-	No connection
24	+B	I	Power input after passing through the fuse
25	+B	I	Power input after passing through the fuse
26	+B	I	Power input after passing through the fuse
27	+B	I	Power input after passing through the fuse
28	NC	-	No connection
29	NC	-	No connection
30	AGND	-	GND
31	/PTT	I	PTT input
32	Side_G	O	Key matrix output (SIDE1,2 key)
33	Side_1	I	Key matrix input (SIDE1 key)
34	W_/N	O	W/N control output
35	SDO1	O	PLL serial data output
36	Side_2	I	Key matrix input (SIDE2 key)
37	/PCS_RF	O	PLL enable output
38	/DSW	O	APC voltage discharge switch control output
39	APC	O	APC control voltage output
40	/APCSW	O	APC switch control output
41	VCO_MOD	O	VCO modulation output

TERMINAL FUNCTION

Pin No.	Name	I/O	Function
42	THP	I	Thermistor voltage input
43	PLD	I	PLL lock detect input
44	38M	O	38M output
45	SCK1	O	PLL clock output
46	GND	-	GND
47	S_DET	I	Battery select input
48	GND	-	GND
49	NC	-	No connection
50	IF_DET	I	IF input
CN405			
1	SSW	I	EXT/INT speaker switch input
2	SP+	O	BTL output + for external speaker
3	SP-	O	BTL output – for external speaker
4	MSW	I	EXT/INT MIC switch input
5	EMC	I	External MIC input
6	ME	-	External MIC GND
7	PTT	I	External PTT input
8	PF	I	Programmable function key input
9	OPT	I/O	Option interface I/O
10	E	-	GND
11	5V	O	5V output
12	TXD	O	Serial data output
13	RXD	I	Serial data input
14	NC	-	No connection
CN701 (for production)			
1~20			
CN710			
1	OPT1	I/O	Refer to "CN710 26-pin connector specification" described on pages 72 to 74.
2	OPT3	I/O	
3	26P_RD	I	
4	26P_TD	O	
5	NC	-	
6	OPT4	O	
7	OPT10	O	
8	OPT5	O	
9	DGND	-	
10	AGND	-	
11	AI	I	
12	AO	O	
13	AGND	-	
14	5V	O	
15	OPT9	I	
16	DTI	I	
17	OPT8	I/O	
18	OPT11	O	
19	OPT7	I/O	

Pin No.	Name	I/O	Function
20	OPT2	I/O	Refer to "CN710 26-pin connector specification" described on pages 72 to 74.
21	TXO	O	
22	RXEO	O	
23	RXEI	I	
24	TXI	I	
25	OPT6	O	
26	POW	O	

TX-RX unit (X57-7360-10 A/2)

Pin No.	Name	I/O	Function
CN900			
1	LED_G	I	Green LED control input
2	/EMG	O	Emergency (Orange) key output
3	LED_R	I	Red LED control input
4	IFC	O	TX-RX PCB version recognition output
5	/SAVE	I	50C Reg. control input
6	I2CCK	I	TCXO thermometer clock input
7	/5TC	I	50T Reg. switch control input
8	I2CSDA	I/O	TCXO thermometer data input/output
9	SBC	I	SB3 switch control input
10	/T_R	I	TX/RX control input
11	TV2	I	RX tuning voltage 2 input
12	ASSIST	I	VCO tuning voltage input
13	TV1	I	RX tuning voltage 1 input
14	VAGC	O	AGC voltage output
15	5RC	I	50R switch control input
16	TCXO_MOD	I	TCXO modulation input
17	GND	-	GND
18	RSSI	O	RSSI voltage output
19	GND	-	GND
20	CV	O	CV voltage output
21	GND	-	GND
22	NC	-	No connection
23	NC	-	No connection
24	+B	O	Power output after passing through the fuse
25	+B	O	Power output after passing through the fuse
26	+B	O	Power output after passing through the fuse
27	+B	O	Power output after passing through the fuse
28	NC	-	No connection
29	NC	-	No connection
30	GND	-	GND
31	/PTT	O	PTT output

TERMINAL FUNCTION

Pin No.	Name	I/O	Function
32	Side_G	I	Key matrix input (SIDE1,2 key)
33	Side_1	O	Key matrix output (SIDE1 key)
34	W_/N	I	No connection
35	SDO1	I	PLL serial data input
36	Side_2	O	Key matrix output (SIDE2 key)
37	/PCS_RF	I	PLL enable input
38	/DSW	I	APC voltage discharge switch control input
39	APC	I	APC control voltage input
40	/APCSW	I	APC switch control input
41	VCO_MOD	I	VCO modulation input
42	THP	O	Thermistor voltage output
43	PLD	O	PLL lock detect output
44	38M	I	38M input
45	SCK1	I	PLL clock input
46	GND	-	GND
47	S_DET	O	Battery select output
48	GND	-	GND
49	NC	-	No connection
50	IF_DET	O	IF output
CN401			
1	PTT	I	Internal PTT input
2	GND	-	GND
3	Side_G	O	Key matrix output (SIDE1,2 key)
4	Side_1	I	Key matrix input (SIDE1 key)
5	Side_2	I	Key matrix input (SIDE2 key)

Option board unit (X57-7360-10 B/2)

Pin No.	Name	I/O	Function
CN736			
1	OPT1	I/O	Refer to "CN736 Option board connector specification" described on page 75.
2	OPT3	I/O	
3	26P_RD	O	
4	26P_TD	I	
5	NC	-	
6	OPT4	I	
7	OPT10	I	
8	OPT5	I	
9	DGND	-	
10	AGND	-	
11	NC	-	
12	NC	-	
13	AGND	-	
14	5V	I	
15	OPT9	O	
16	DTI	O	
17	OPT8	I/O	
18	OPT11	I	
19	OPT7	I/O	
20	OPT2	I/O	
21	TXO	I	
22	RXEO	I	
23	RXEI	O	
24	TXI	O	
25	OPT6	I	
26	POW	I	

Solder Pad

Name	I/O	Signal Type	Function	Rating and Condition				
				Parameter	Min	Typ	Max	Unit
PTT2	O	Digital	PTT output	[Output] Output Impedance			10k	Ω
PTT1	I	Digital	PTT input	[Input] VIH	2.8		3.3	V
				[Input] VIL	0		0.5	V
MDSW	I	Digital	Man-down switch input	[Input] VIH	2.8		3.3	V
				[Input] VIL	0		0.5	V
GND	-	GND	GND	Allowable current value				mA
TXD	O	Digital	Serial data output	VOH (Io=-5mA)	4.0	-	5.3	V
				VOL (Io=5mA)	0	-	0.8	V
				Baud Rate			19200	bps
RXD	I	Digital	Serial data input	VIH	2.8	-	5.3	V
				VIL	0	-	0.8	V
				Baud Rate			19200	bps
RSSI	O	Analog	RSSI output	Output Impedance			10k	Ω

TERMINAL FUNCTION

Universal connector

Pin No.	Name	I/O	Signal Type	Function	Rating and Condition				
					Parameter	Min	Typ	Max	Unit
1	SSW	I	Digital	EXT/INT speaker switch input L: External speaker ON H: Internal speaker ON	VIH	2.8	-	5.3	V
					VIL	0	-	0.7	V
2	SP+	O	Analog	BTL output + for external speaker	[8Ω load] Max output power (1kHz, Batt=7.5V)		1.3	1.8	W
					[8Ω load] DC Bias		2.5		V
					[8Ω load] Allowable Frequency	300		3000	Hz
3	SP–	O	Analog	BTL output – for external speaker	[16Ω load] Max output power (1kHz, Batt=7.5V)		0.9	1.4	W
					[16Ω load] DC Bias		2.5		V
					[16Ω load] Allowable Frequency	300		3000	Hz
4	MSW	I	Digital	EXT/INT MIC switch input L: External MIC ON H: Internal MIC ON	VIH	2.8	-	5.3	V
					VIL	0	-	0.5	V
5	EMC	I	Analog	External MIC input	Audio Level (STD deviation)	7.7	12.5	17.3	mV
					DC Bias		3.3		V
					Allowable Frequency	300		3000	Hz
					Input Impedance	-	1.8	-	kΩ
6	ME	-	-	External MIC GND					
7	PTT	I	Digital	External PTT input L: PTT ON	VIH	2.8	-	5.3	V
					VIL	0	-	0.7	V
8	PF	I	Analog	Programmable function key input	V (PF2 key ON)	2.2	-	2.8	V
					V (PF1 key ON)	1.7	-	2.2	V
					V (PF1, PF2 key ON)	1.3	-	1.7	V
9	OPT	I	Digital	Man-down input Programmable active H/L	VIH	2.8	-	5.3	V
					VIL	0	-	0.7	V
10	E	-	-	GND					
11	5V	-	Power	5V power supply output (Output control is FPU programmable)	Output Voltage (Iout=100mA)	4.9	5.0	5.1	V
					Maximum Current	-	-	0.2	A
12	TXD	O	Digital	Serial data output	VOH (Io=–5mA)	4.0	-	5.3	V
					VOL (Io=5mA)	0	-	0.8	V
					Baud Rate			19200	bps
13	RXD	I	Digital	Serial data input	VIH	2.8	-	5.3	V
					VIL	0	-	0.8	V
					Baud Rate			115200	bps
14	NC	-	-	Not used (reserved for future option)					

TERMINAL FUNCTION

CN710 26-pin connector specification

Pin No.	Name	I/O	Signal Type	Rating and Condition				
				Parameter	Min	Typ	Max	Unit
1	OPT1	I/O	Digital	[Input] VIH	2.8		3.3	V
6	OPT4			[Input] VIL	0		0.5	V
8	OPT5			[Output] VOH	2.8		3.5	V
17	OPT8							
18	OPT11			[Output] VOL	0		0.5	V
2	OPT3	I/O	Digital	[Input] VIH	2.8		3.3	V
19	OPT7			[Input] VIL	0		0.5	V
20	OPT2			[Output] VOH	2.8		3.5	V
25	OPT6			[Output] VOL	0		0.5	V
3	26P_RD	I	Digital	[Input] VIH	2.8		3.3	V
				[Input] VIL	0		0.5	V
				Baud Rate			19200	bps
4	26P_TD	O	Digital	[Output] VOH	2.8		3.5	V
				[Output] VOL	0		0.5	V
				Baud Rate			19200	bps
15	OPT9	I	Analog	Input Amplitude (Square wave)	-	3.3	-	Vp-p
				Coupling Capacitor	-	0.01	-	μF
				Input Impedance	22k	-	-	Ω
				Allowable Frequency	300	-	3000	Hz
7	OPT10	O	Analog/Digital	Output Amplitude (1kHz, 60% deviation)	0.9	1.3	1.7	Vp-p
				Coupling Capacitor		0.1		μF
				Output Impedance			22k	Ω
				Allowable Frequency	300		3000	Hz
11	AI	I	Analog	Input Amplitude (1kHz, 60% deviation)	0.3	0.5	0.7	Vp-p
				Coupling Capacitor	-	0.1	-	μF
				Input Impedance	-	12k	-	Ω
				Allowable Frequency	300		3000	Hz
12	AO	O	Analog	Output Amplitude (1kHz, 60% deviation)	30	50	70	mVp-p
				Coupling Capacitor	-	0.1	-	μF
				Output Impedance	-	35k	-	Ω
				Allowable Frequency	300		3000	Hz
16	DTI	I	Analog	Input Amplitude (1kHz, 60% deviation)	0.8	1.1	1.4	Vp-p
				Coupling Capacitor	-	0.1	-	μF
				Input Impedance	22k	-	-	Ω
				Allowable Frequency	300	-	3000	Hz
21	TXO	O	Analog	Output Amplitude (1kHz, 60% deviation) while external MIC	160	260	360	mVp-p
				Output Amplitude (1kHz, 60% deviation) while internal MIC	-	130	-	mVp-p
				Coupling Capacitor	-	0.1	-	μF
				Output Impedance	-	-	2.2k	Ω
				Allowable Frequency	300		3000	Hz

TERMINAL FUNCTION

Pin No.	Name	I/O	Signal Type	Rating and Condition				
				Parameter	Min	Typ	Max	Unit
22	RXEO	O	Analog	Output Amplitude (1kHz, 60% deviation)	450	640	830	mVp-p
				Coupling Capacitor	-	0.1	-	μF
				Output Impedance	-	-	2.2k	Ω
				Allowable Frequency	300	-	3000	Hz
23	RXEI	I	Analog	Input Amplitude (1kHz, 60% deviation)	450	640	830	mVp-p
				Coupling Capacitor		0.1		μF
				Input Impedance	22k			Ω
				Allowable Frequency	300		3000	Hz
24	TXI	I	Analog	Input Amplitude (1kHz, 60% deviation) while external MIC	160	260	360	mVp-p
				Input Amplitude (1kHz, 60% deviation) while internal MIC	-	130	-	mVp-p
				Coupling Capacitor	-	0.1	-	μF
				Input Impedance	22k	-	-	Ω
				Allowable Frequency	300	-	3000	Hz
14	5V	O	Power	Output Voltage		5		V
				Output Current			78	mA
26	POW	O	Power	Output Voltage		7.5		V
				Output Current			100	mA
9	DGND	-	GND	Allowable current value (Total current of 3 pins)			100	mA
10	AGND							
13								
5	NC	-	-	-				

CN710 26-pin connector specification

Pin No.	Name	Device	I/O	Connection	Function
1	OPT1	ANI board	O	Aux Input	[COR] Conv/LTR L: Activity receiving H: Not activity receiving [TOR] Conv/LTR L: Activity receiving (Sub Tone or LTR ID is OK) H: Not activity receiving [LOK] Conv L: TX Complete H: Not TX Complete LTR L: TX Link Complete (until TX finishes) H: Not TX Link Complete
		VGS-1	I	BUSY	BUSY indication
2	OPT3	ANI board	I	KEY	TX requirement input
		VGS-1	I	PLAY	PLAY indication
3	26P_RD	ANI board	-	-	-
		VGS-1	I	SO	Serial data input

TERMINAL FUNCTION

Pin No.	Name	Device	I/O	Connection	Function
4	26P_TD	ANI board	-	-	-
		VGS-1	O	SI	Serial data output
5	NC	-	-	-	-
6	OPT4	ANI board	O	PTT	PTT signal output
		VGS-1	O	EN	Enable
7	OPT10	ANI board	-	-	-
		VGS-1	O	USEL	UART speed select output
8	OPT5	ANI board	O	Emergency	Emergency signal output
		VGS-1	O	RST	Reset output
9	DGND	ANI board	-	A–	GND
		VGS-1	-	DGND	DGND
10	AGND	ANI board	-	A–	GND
		VGS-1	-	AGND	AGND
11	AI	ANI board	-	-	-
		VGS-1	I	AO	VGS Audio input
12	AO	ANI board	-	-	-
		VGS-1	O	AI	VGS Audio output
13	AGND	ANI board	-	A–	GND
		VGS-1	-	AGND	AGND
14	5V	ANI board	-	-	Note: POW and 5V can not be used simultaneously.
		VGS-1	O	5C	5V power supply
15	OPT9	ANI board	I	Sidetone	Sidetone input
		VGS-1	-	-	-
16	DTI	ANI board	I	Data Out	Data signal input
		VGS-1	-	-	-
17	OPT8	ANI board	I	Tone Control	Speaker mute signal input
		VGS-1	-	-	-
18	OPT11	ANI board	O	Man-Down	Man-Down output
		VGS-1	-	-	-
19	OPT7	ANI board	I	MIC Mute	MIC mute signal input
		VGS-1	-	-	-
20	OPT2	ANI board	I	Aux Output	Emergency signal input
		VGS-1	-	-	-
21	TXO	ANI board	-	-	-
		VGS-1	-	-	-
22	RXEO	ANI board	-	-	-
		VGS-1	-	-	-
23	RXEI	ANI board	-	-	-
		VGS-1	-	-	-
24	TXI	ANI board	-	-	-
		VGS-1	-	-	-
25	OPT6	ANI board	-	-	-
		VGS-1	-	-	-
26	POW	ANI board	O	A+	Switched B output
		VGS-1	-	-	Note: POW and 5V can not be used simultaneously.

TERMINAL FUNCTION

CN736 Option board connector specification

Pin No.	Name	Device	I/O	Connection	Function
1	OPT1	ANI board	I	Aux Output	[COR] Conv/LTR L: Activity receiving H: Not activity receiving [TOR] Conv/LTR L: Activity receiving (Sub Tone or LTR ID is OK) H: Not activity receiving [LOK] Conv L: TX Complete H: Not TX Complete LTR L: TX Link Complete (until TX finishes) H: Not TX Link Complete
2	OPT3	ANI board	O	KEY	TX requirement output
3	26P_RD	ANI board	-	-	-
4	26P_TD	ANI board	-	-	-
5	NC	-	-	-	-
6	OPT4	ANI board	I	PTT	PTT signal input
7	OPT10	ANI board	-	-	-
8	OPT5	ANI board	I	Emergency	Emergency signal input
9	DGND	ANI board	-	A–	GND
10	AGND	ANI board	-	A–	GND
11	NC	-	-	-	-
12	NC	-	-	-	-
13	AGND	ANI board	-	A–	GND
14	5V	ANI board	-	-	Note: POW and 5V can not be used simultaneously.
15	OPT9	ANI board	O	Sidetone	Sidetone output
16	DTI	ANI board	O	Data Out	Data signal output
17	OPT8	ANI board	O	Tone Control	Speaker mute signal output
18	OPT11	ANI board	I	Man-Down	Man-Down input
19	OPT7	ANI board	O	MIC Mute	MIC mute signal output
20	OPT2	ANI board	O	Aux Output	Emergency signal output
21	TXO	ANI board	-	-	-
22	RXEO	ANI board	-	-	-
23	RXEI	ANI board	-	-	-
24	TXI	ANI board	-	-	-
25	OPT6	ANI board	-	-	-
26	POW	ANI board	I	A+	Switched B input

NX-200 PC BOARD

CONTROL UNIT (X53-4260-XX) -10: E3 -11: E
Component side view (J79-0131-29)

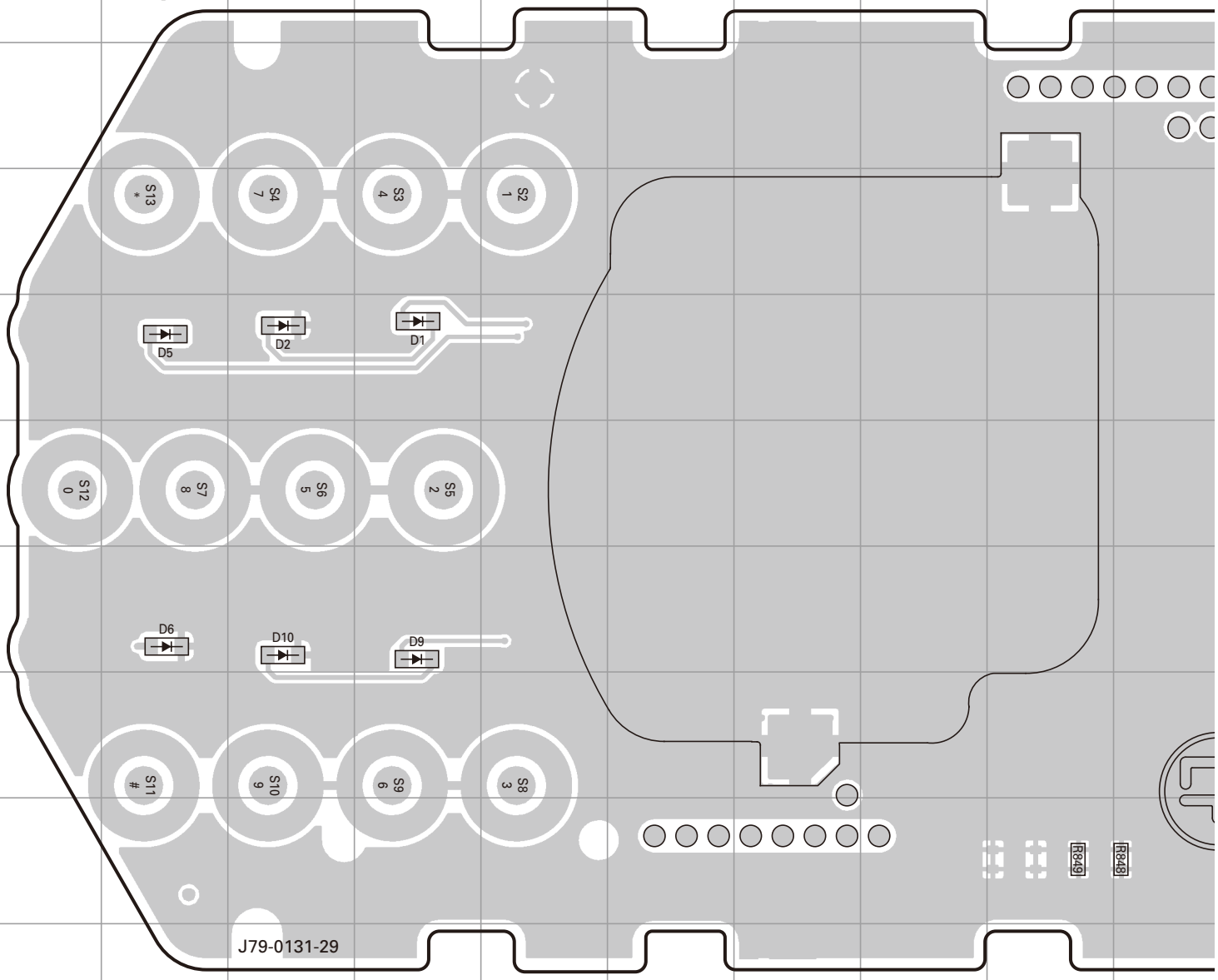

Ref. No.	Address	Ref. No.	Address	Ref. No.	Address
IC1	6K	D4	3Q	D14	7M
IC415	8K	D5	5B	D15	7L
Q1	7K	D6	7B	D16	7L
Q2	7L	D7	10O	D17	9L
Q3	6L	D8	10Q	D18	4L
Q4	4L	D9	7D	D19	4L
Q5	4L	D10	7C	D20	8M
D1	5D	D11	7L	D21	8M
D2	5C	D12	7M	D22	8L
D3	3O	D13	7M	D23	9L

CONTROL UNIT (X53-4260-XX) -10: E3 -11: E
Component side view (J79-0131-29)

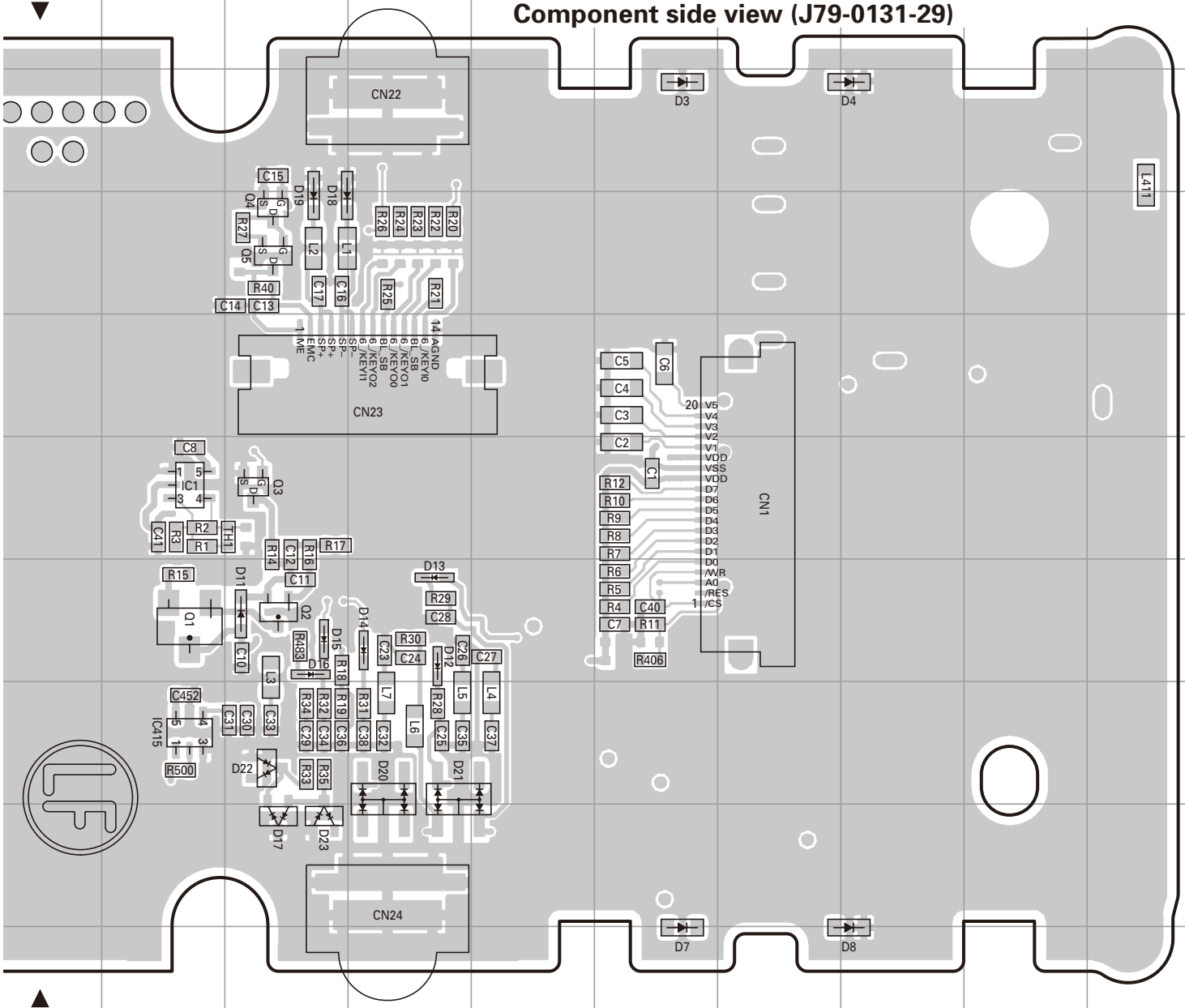

Component side
Layer 1
Layer 2
Layer 3
Layer 4
Layer 5
Layer 6
Foil side

NX-200 PC BOARD

CONTROL UNIT (X53-4260-XX) -10: E3 -11: E
Foil side view (J79-0131-29)

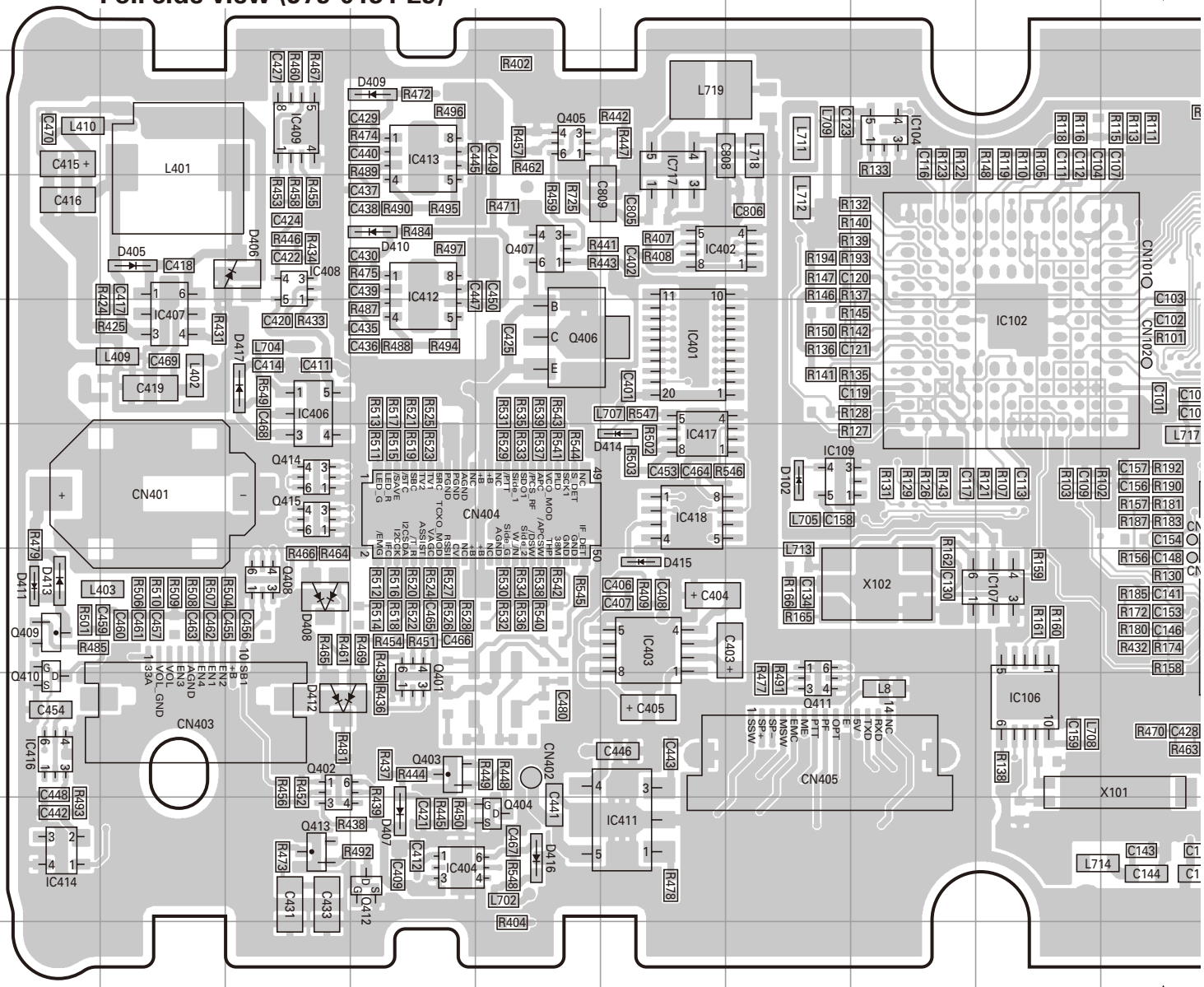

CONTROL UNIT (X53-4260-XX) -10: E3 -11: E
Foil side view (J79-0131-29)

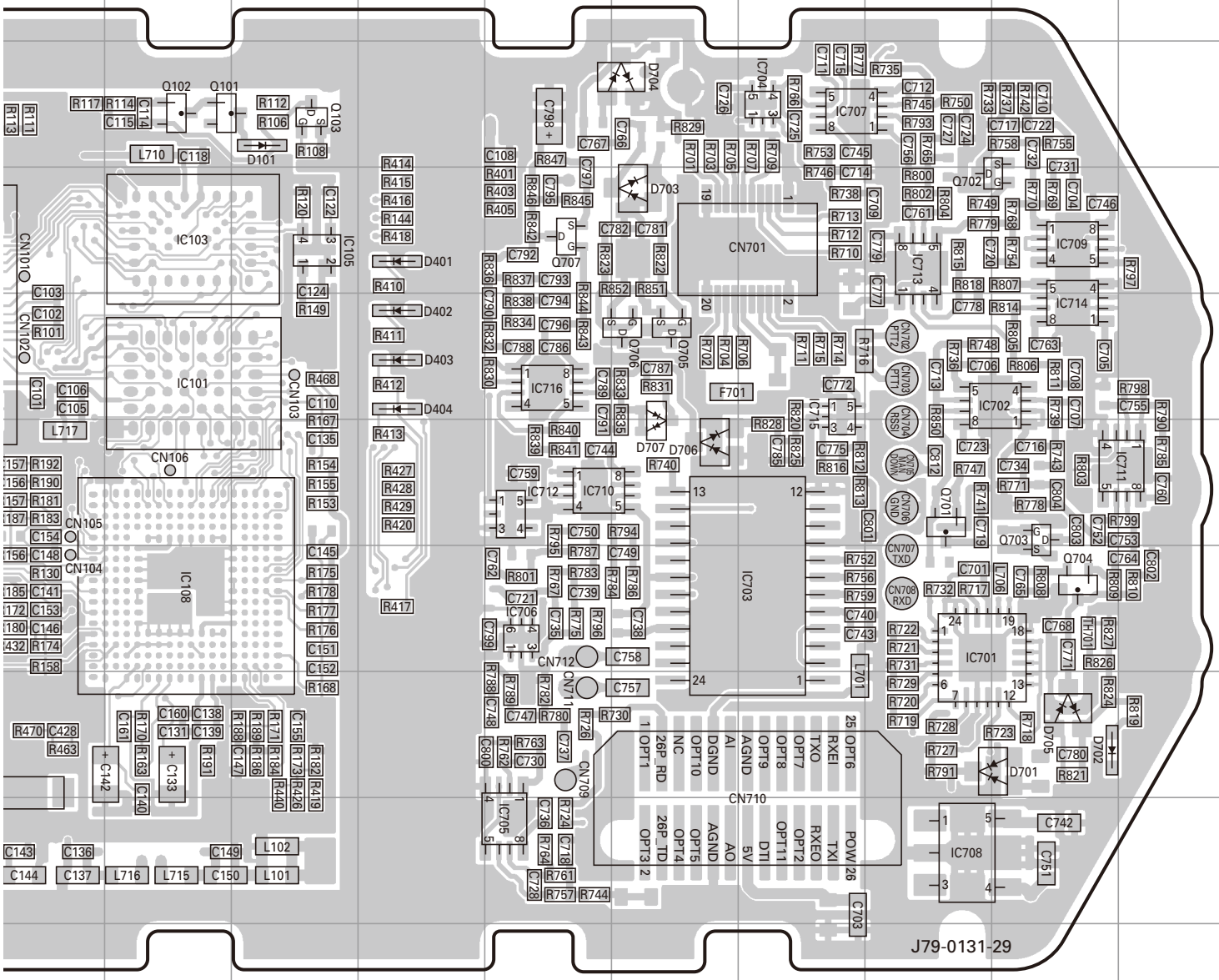

ss	Ref. No.	Address
	D417	5C
	D701	8R
	D702	8R
	D703	4O
	D704	3O
	D705	8R
	D706	6O
	D707	6O

Component side
Layer 1
Layer 2
Layer 3
Layer 4
Layer 5
Layer 6
Foil side

NX-200 PC BOARD

TX-RX UNIT (X57-7360-10) (A/2)
Component side view (J79-0127-39 A/2)

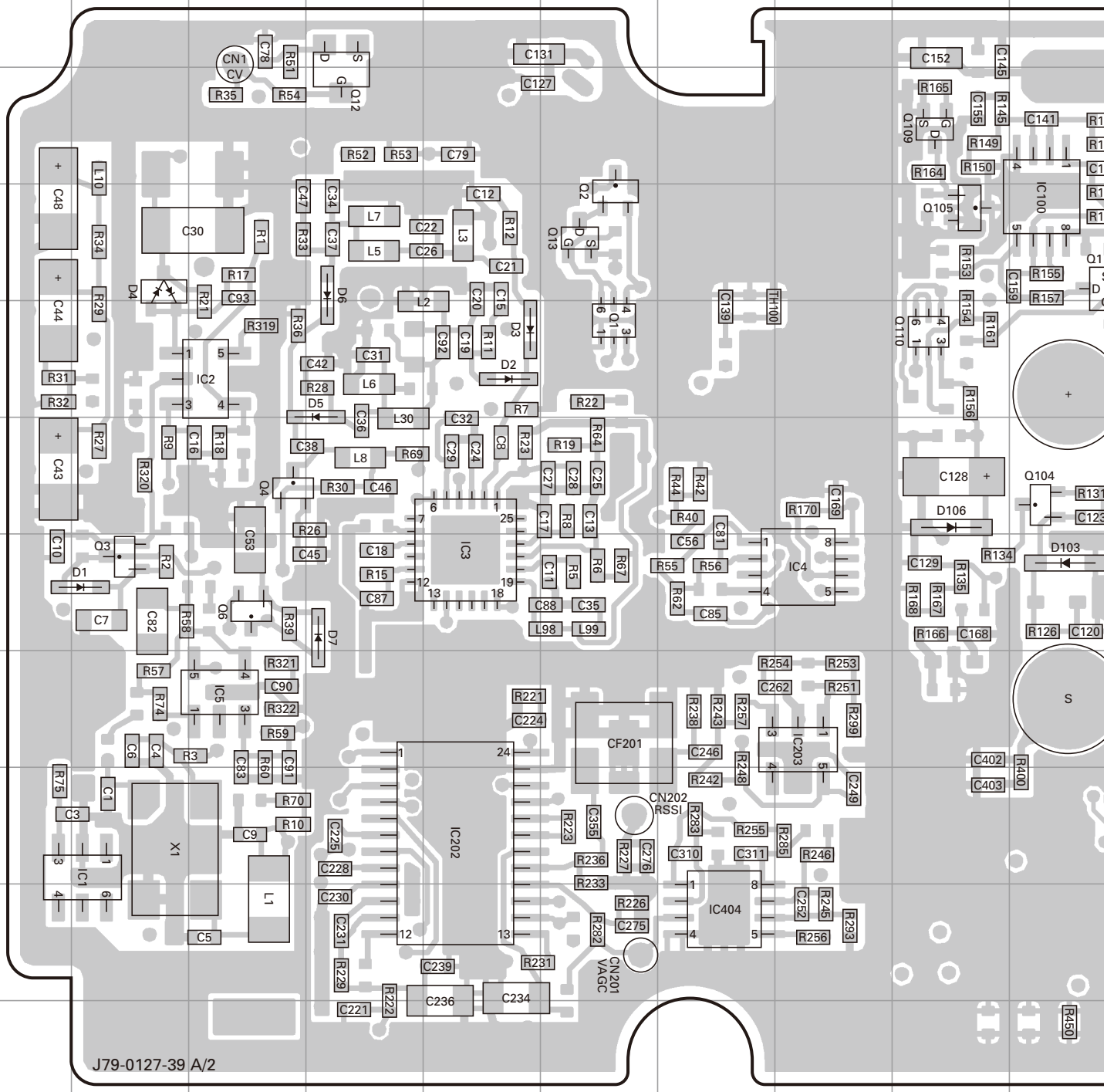

Ref. No.	Address	Ref. No.	Address	Ref. No.	Address	Ref. No.	Address	Ref. No.	Address	Ref. No.	Address
IC1	9B	IC203	8H	Q4	6C	Q110	5I	D3	5E	D401	5P
IC2	5C	IC400	5N	Q6	7C	Q401	7M	D4	4B	D402	8P
IC3	7E	IC401	4P	Q12	3D	Q403	7N	D5	5D	D403	4N
IC4	7H	IC402	9O	Q13	4F	Q404	9O	D6	4D		
IC5	8C	IC404	10G	Q104	6J	Q405	4N	D7	7D		
IC100	4J	Q1	5F	Q105	4I	Q406	9P	D103	7J		
IC200	7K	Q2	4F	Q107	4J	D1	7B	D106	6I		
IC202	9E	Q3	7B	Q109	3I	D2	5E	D400	5M		

TX-RX UNIT (X57-7360-10) (A/2)
Component side view (J79-0127-39 A/2)

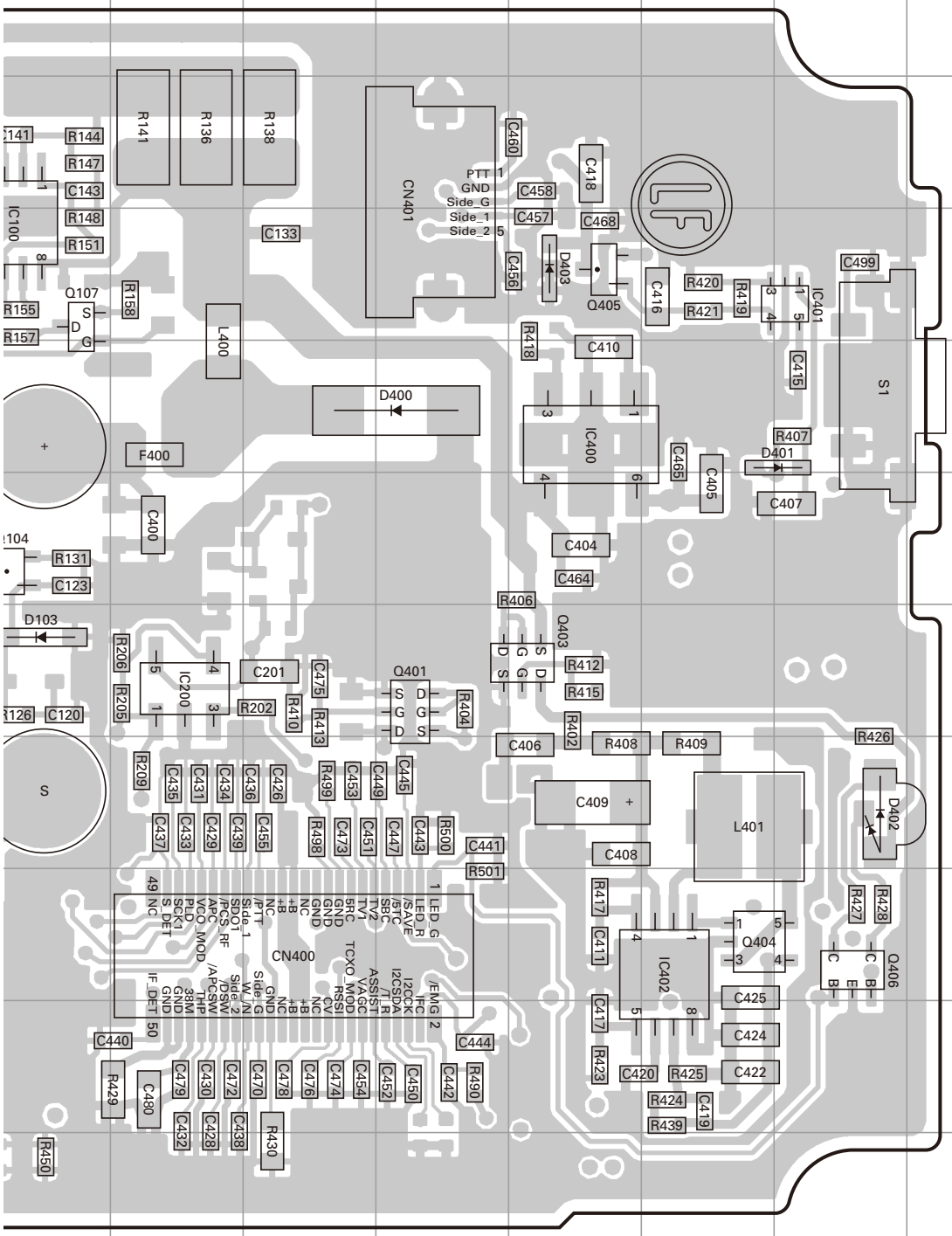

TX-RX UNIT (X57-7360-10) (B/2)

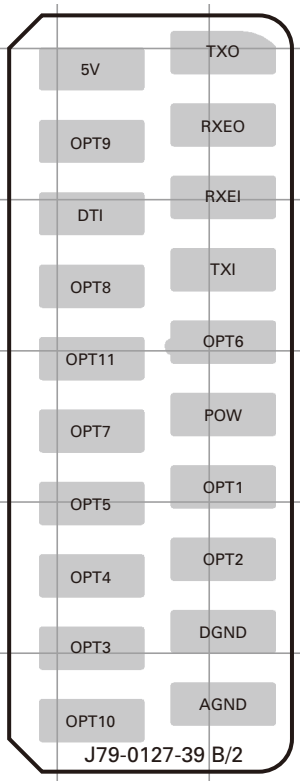

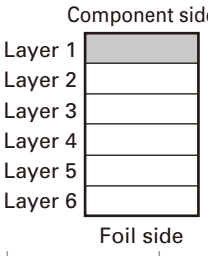

NX-200 PC BOARD

TX-RX UNIT (X57-7360-10) (A/2)
Foil side view (J79-0127-39 A/2)

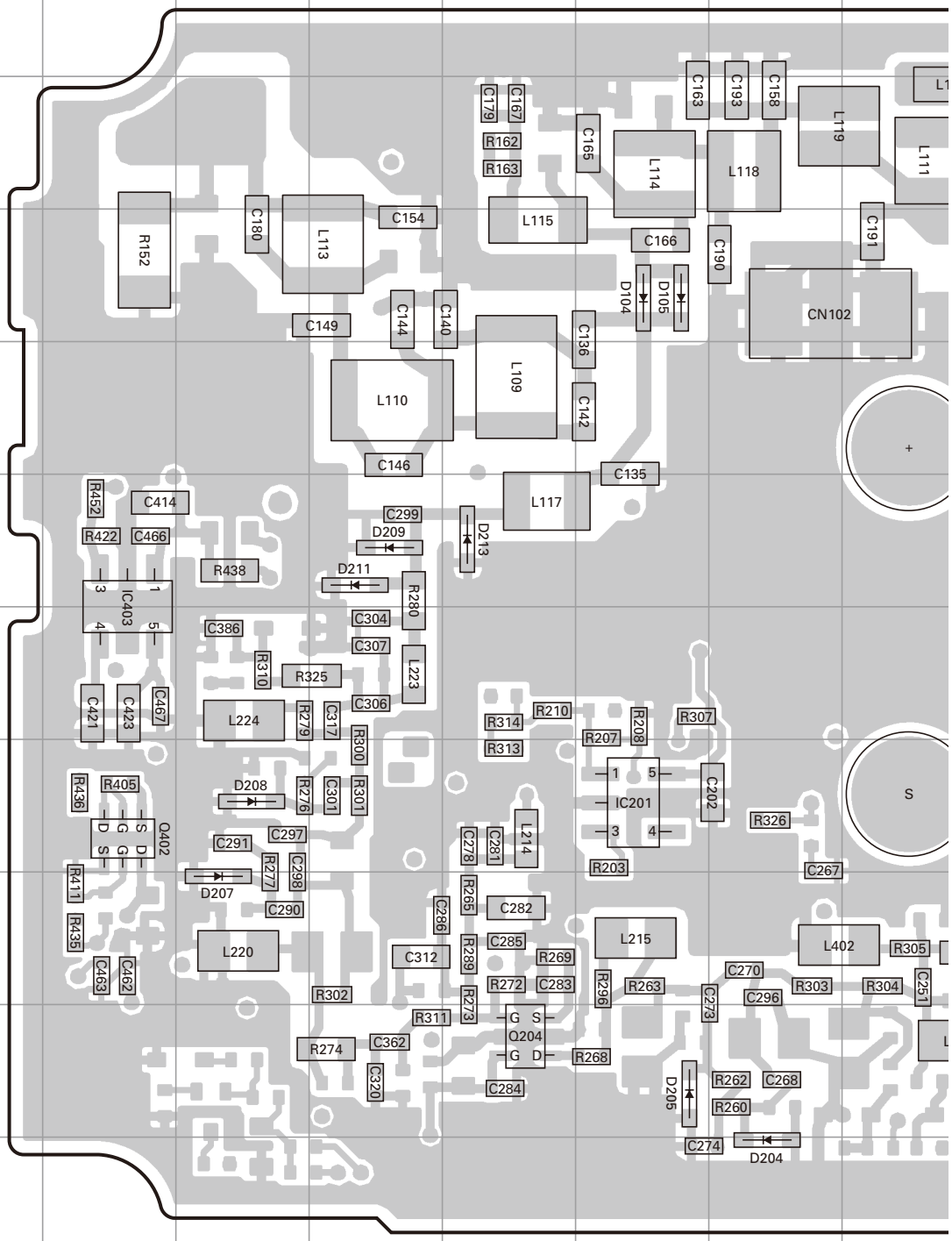

TX-RX UNIT (X57-7360-10) (B/2)

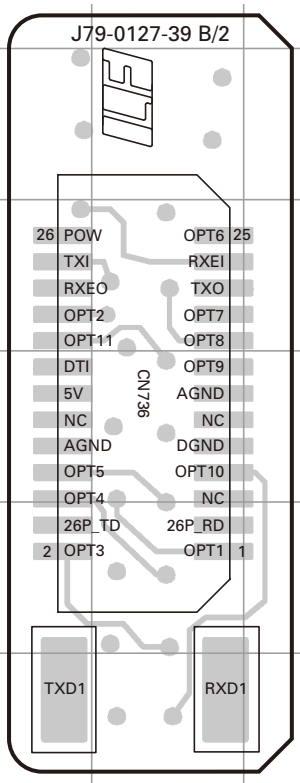

Component side

Layer 1
Layer 2
Layer 3
Layer 4
Layer 5
Layer 6

Foil side

PC BOARD NX-200

TX-RX UNIT (X57-7360-10) (A/2)
Foil side view (J79-0127-39 A/2)

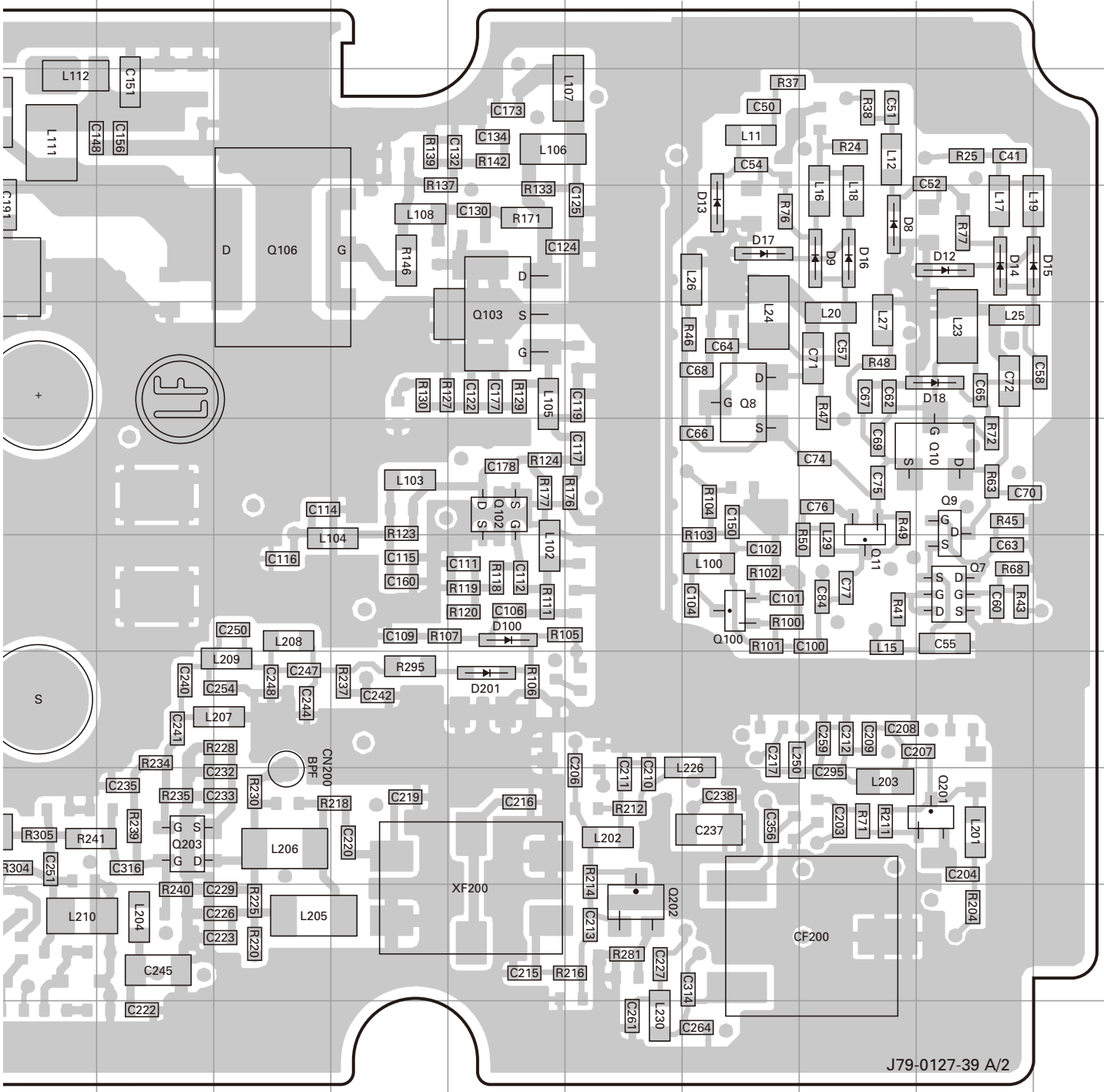

Ref. No.	Address	Ref. No.	Address	Ref. No.	Address	Ref. No.	Address	Ref. No.	Address	Ref. No.	Address
IC201	8H	Q100	7P	Q204	10G	D15	4S	D201	8N	D213	6G
IC403	7D	Q102	6N	Q402	8D	D16	4Q	D204	11I		
Q7	7R	Q103	5N	D8	4Q	D17	4P	D205	10H		
Q8	5P	Q106	4L	D9	4Q	D18	5R	D207	9E		
Q9	6R	Q201	9R	D12	4R	D100	7N	D208	8E		
Q10	6R	Q202	10O	D13	4P	D104	4H	D209	6F		
Q11	7Q	Q203	9K	D14	4R	D105	4H	D211	6F		

INTERCONNECTION DIAGRAM

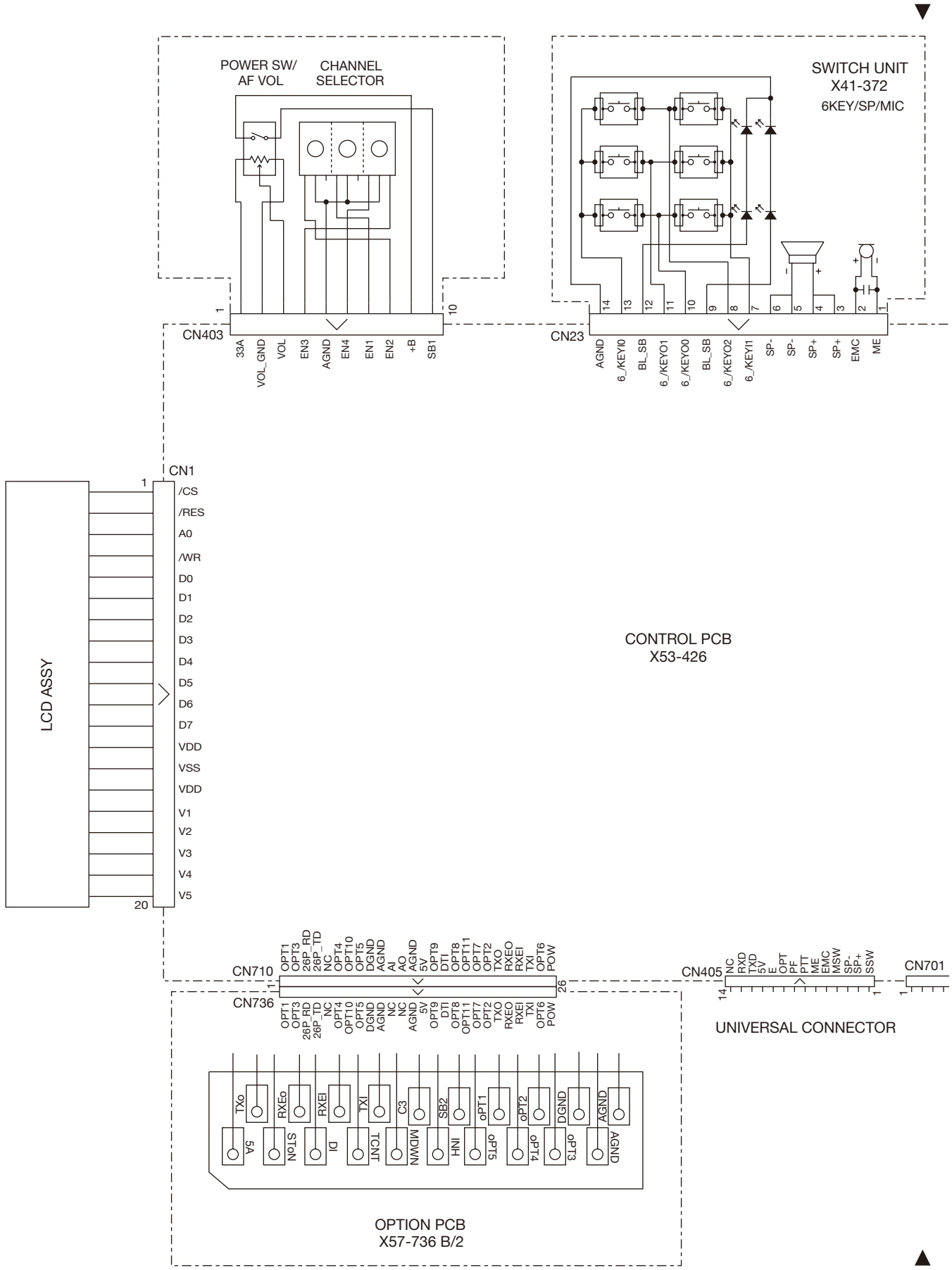

INTERCONNECTION DIAGRAM

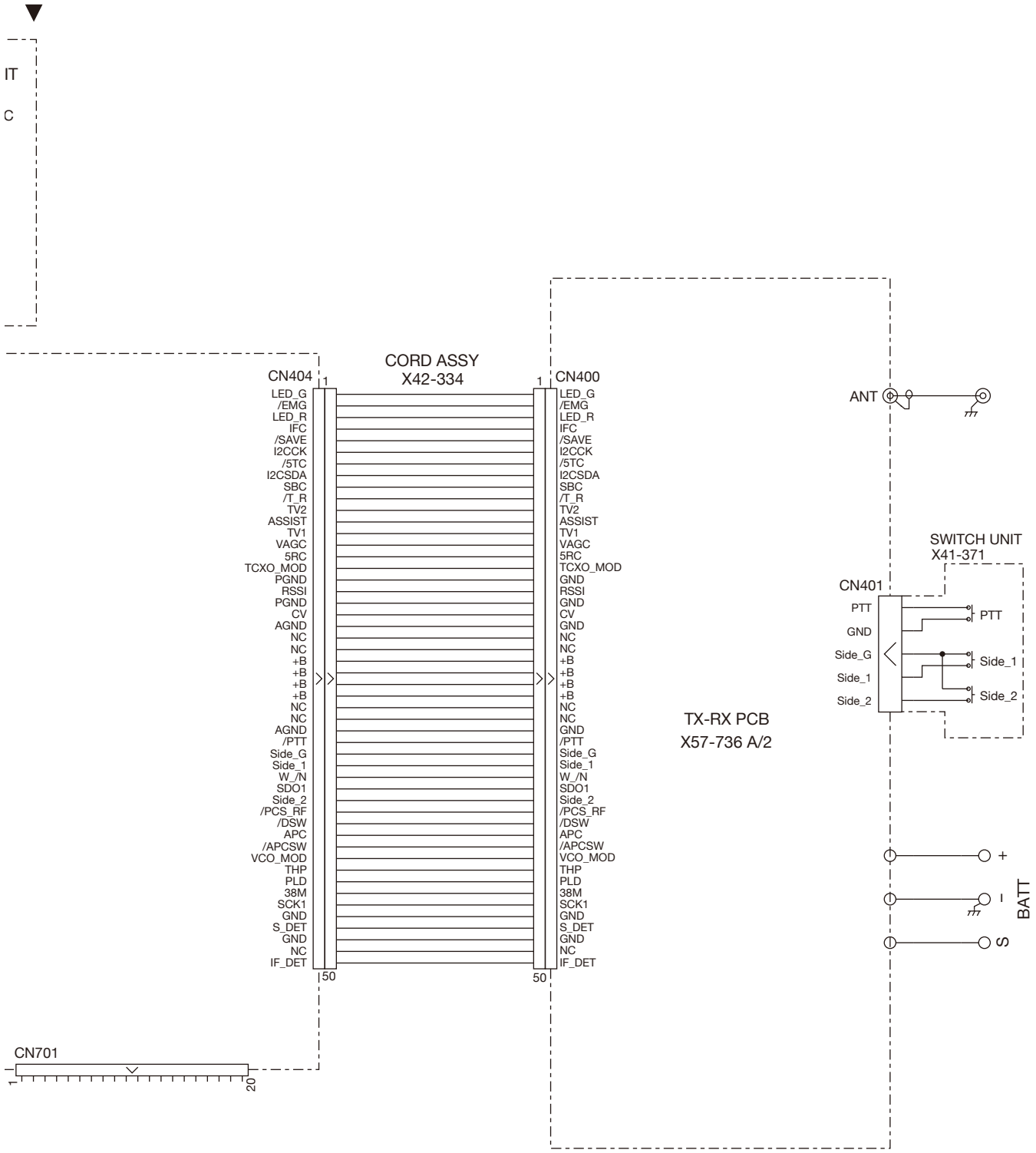

NX-200 SCHEMATIC DIAGRAM

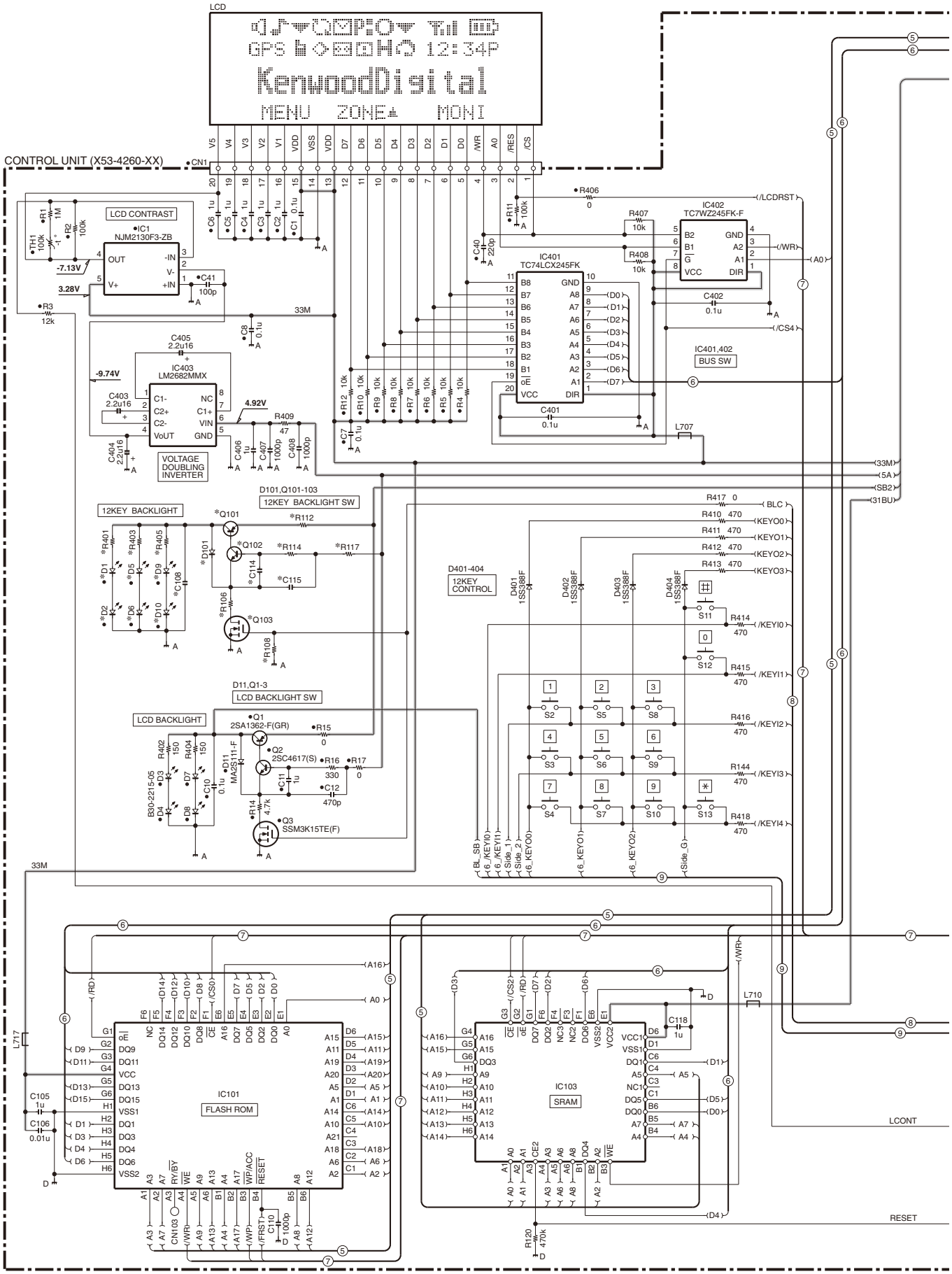

X53-4260-XX		D1	D2	D5	D6	D9	D10	D101	Q101	Q102	Q103	R106	R108	R112	R114	R117	R401	R403	R405	C108	C114	C115
-10	E3	NO	NO	NO	NO	NO	NO	NO	NO	NO	NO	NO	NO	NO	NO	NO	NO	NO	NO	NO	NO	NO
-11	E	B30-2215-05	B30-2215-05	B30-2215-05	B30-2215-05	B30-2215-05	B30-2215-05	MA2S111-F	2SA1832(GR)F	2SC4617(S)	SSM3K15TE(F)	4.7k	470k	0	330	0	1.5k	1.5k	1.5k	0.1u	1u	470p

SCHEMATIC DIAGRAM NX-200

CONTROL UNIT (X53-4260-XX)

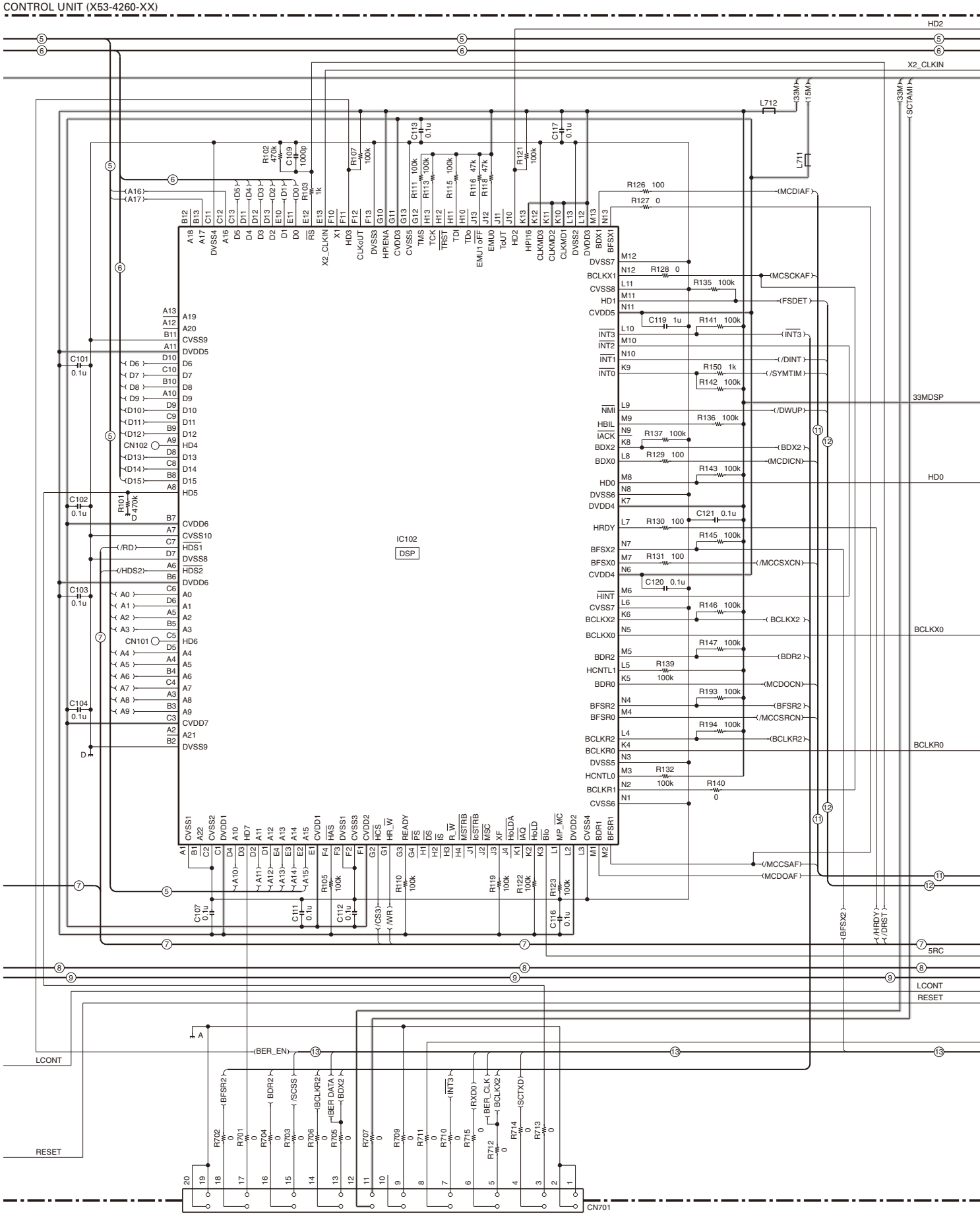

NX-200 SCHEMATIC DIAGRAM

CONTROL UNIT (X53-4260-XX)

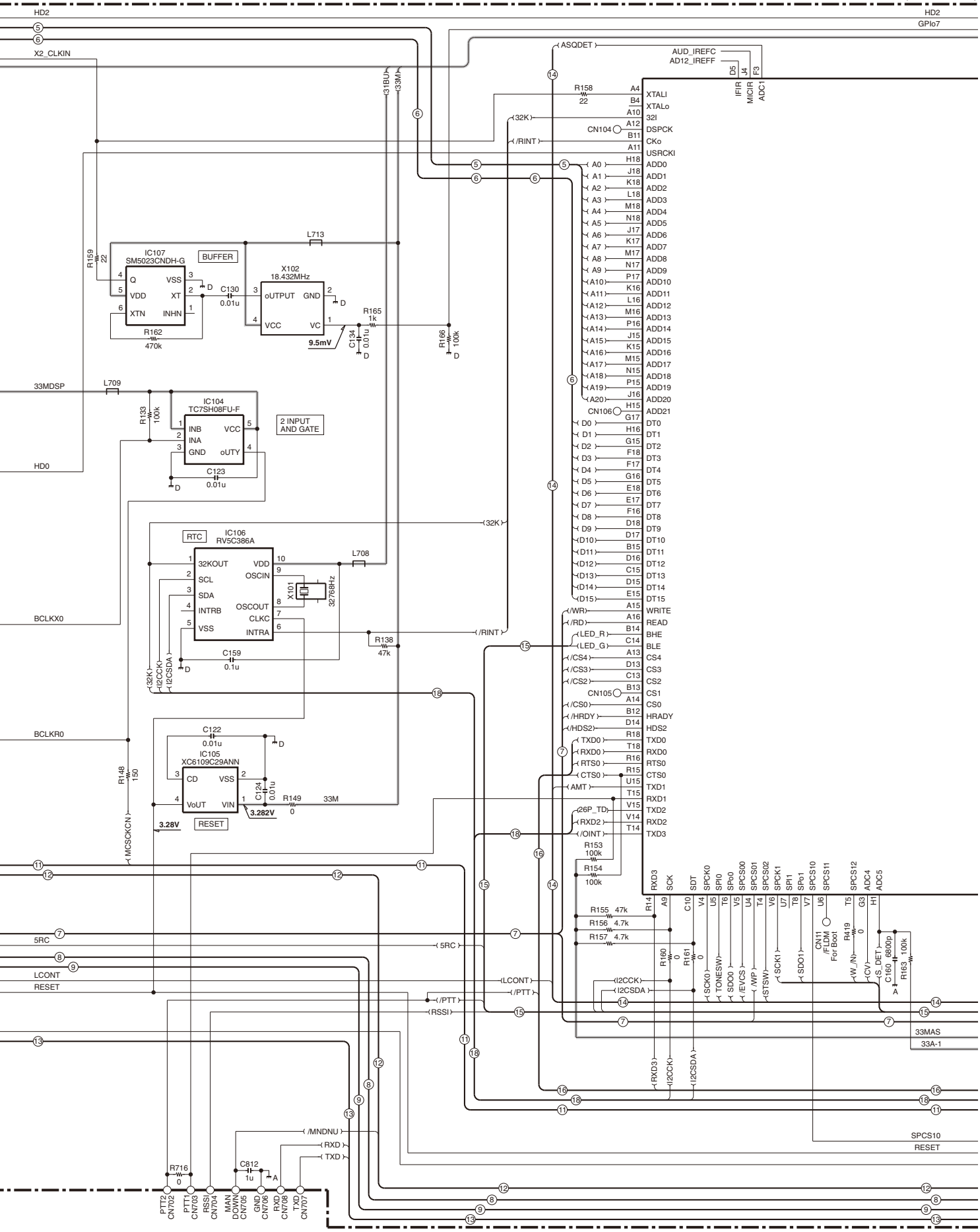

SCHEMATIC DIAGRAM NX-200

CONTROL UNIT (X53-4260-XX)

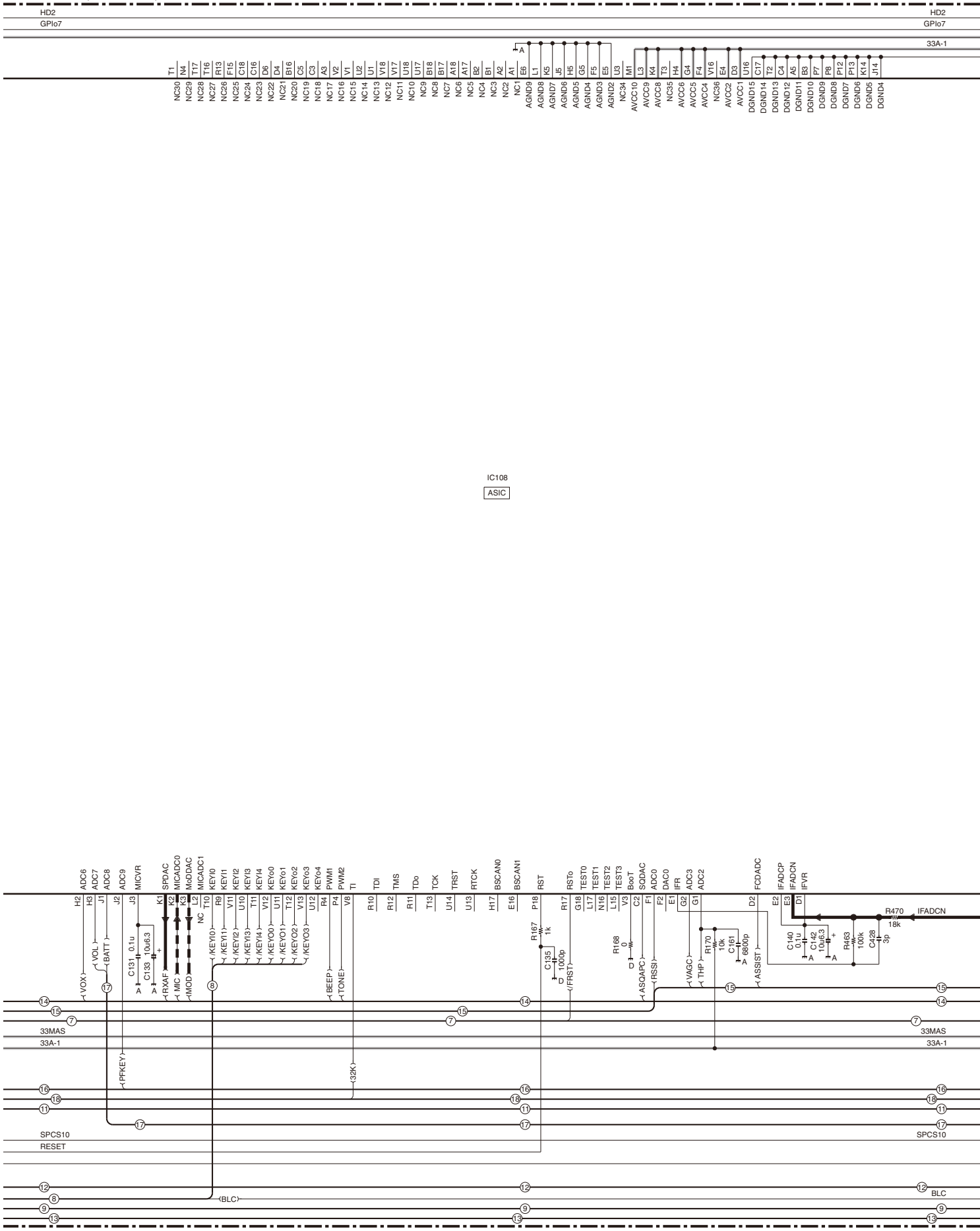

NX-200 SCHEMATIC DIAGRAM

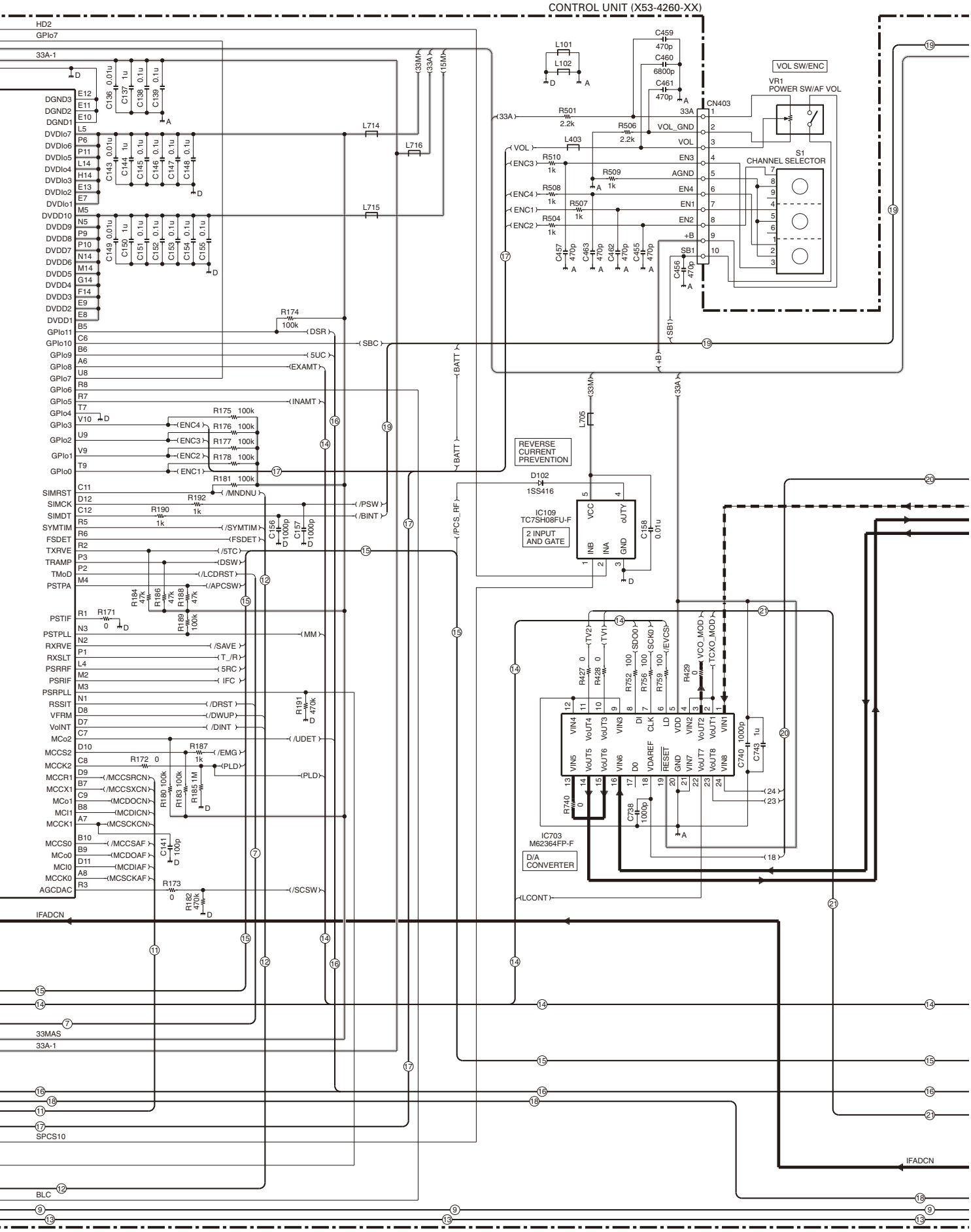

SCHEMATIC DIAGRAM NX-200

CONTROL UNIT (X53-4260-XX)

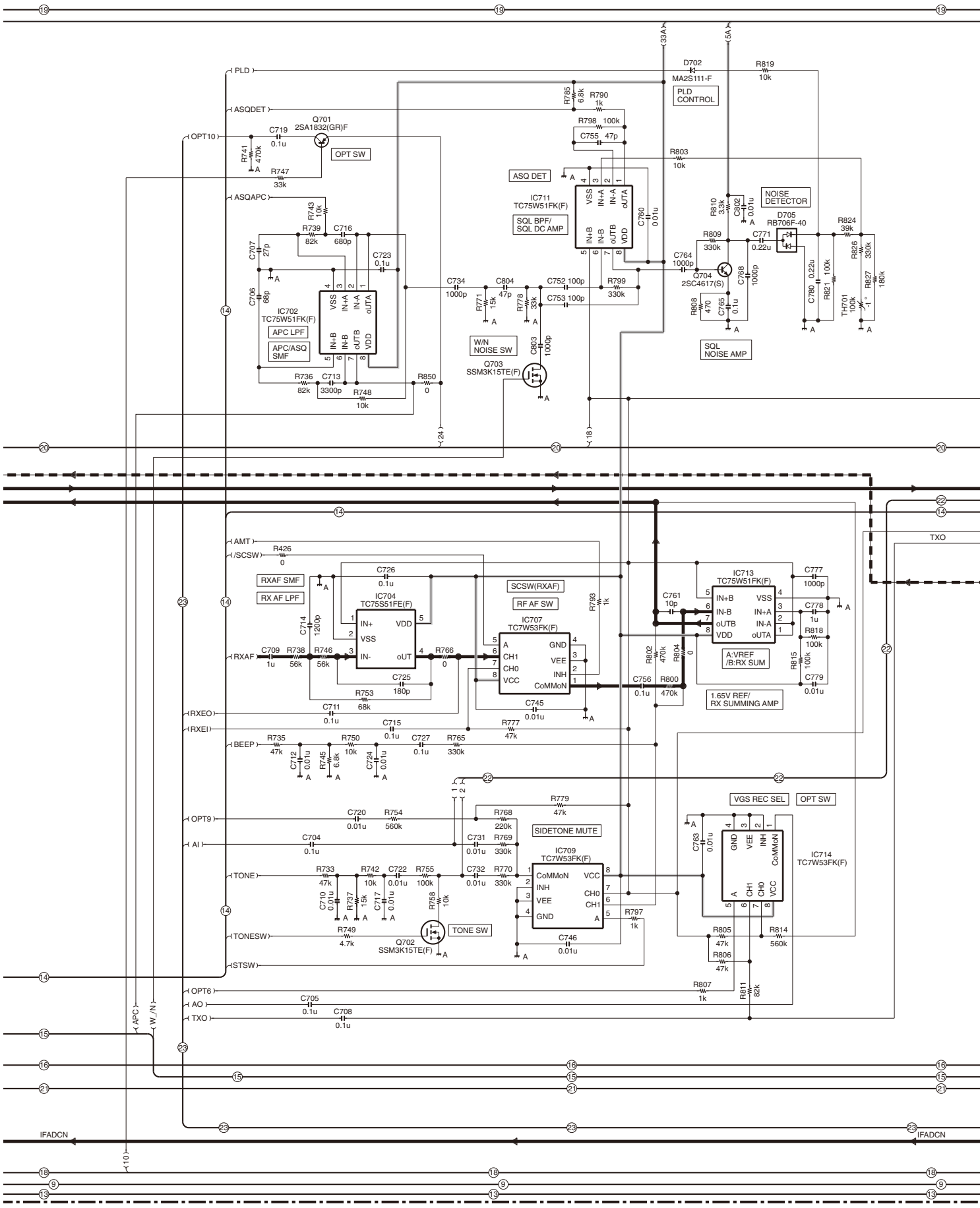

NX-200 SCHEMATIC DIAGRAM

CONTROL UNIT (X53-4260-XX)

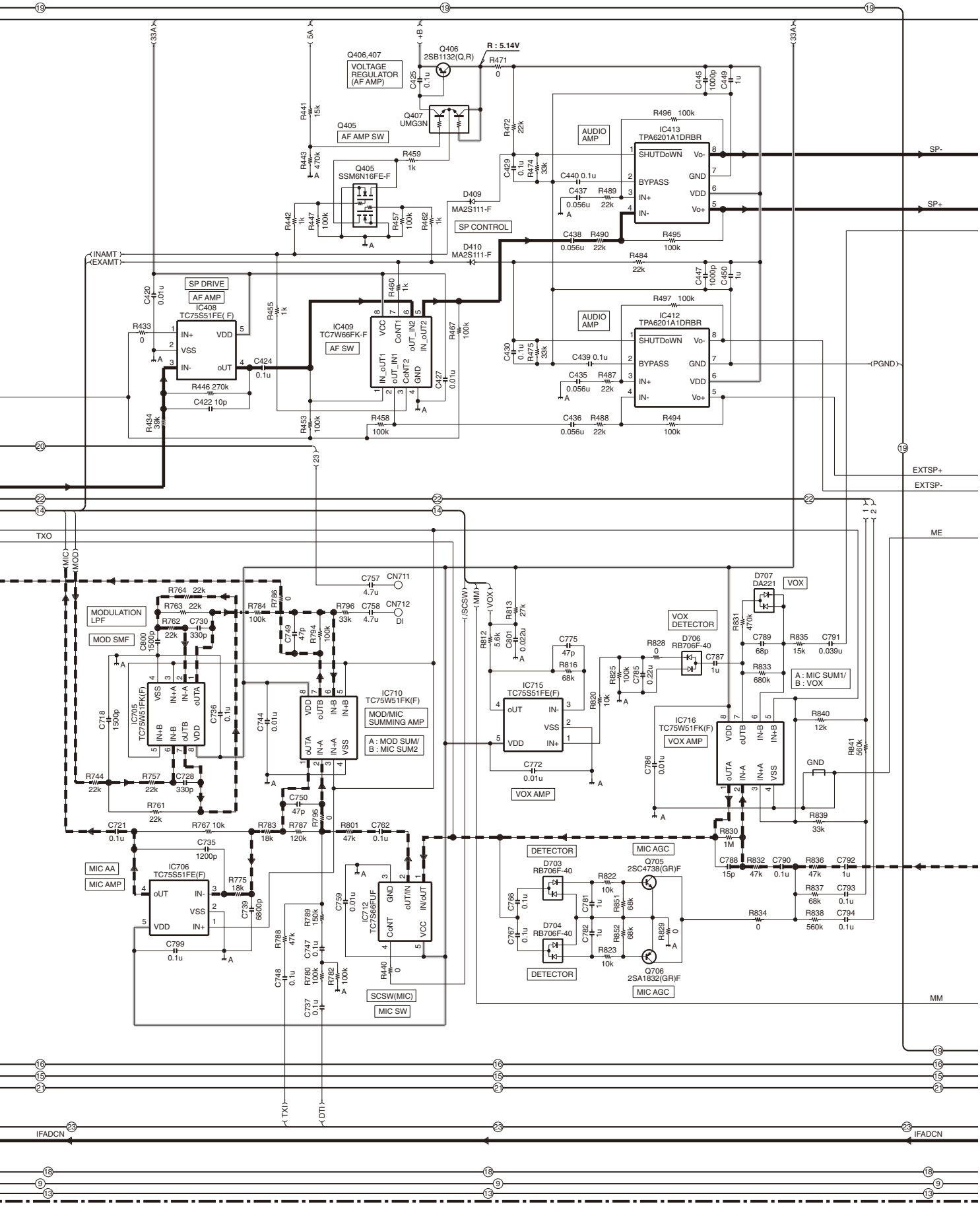

SCHEMATIC DIAGRAM NX-200

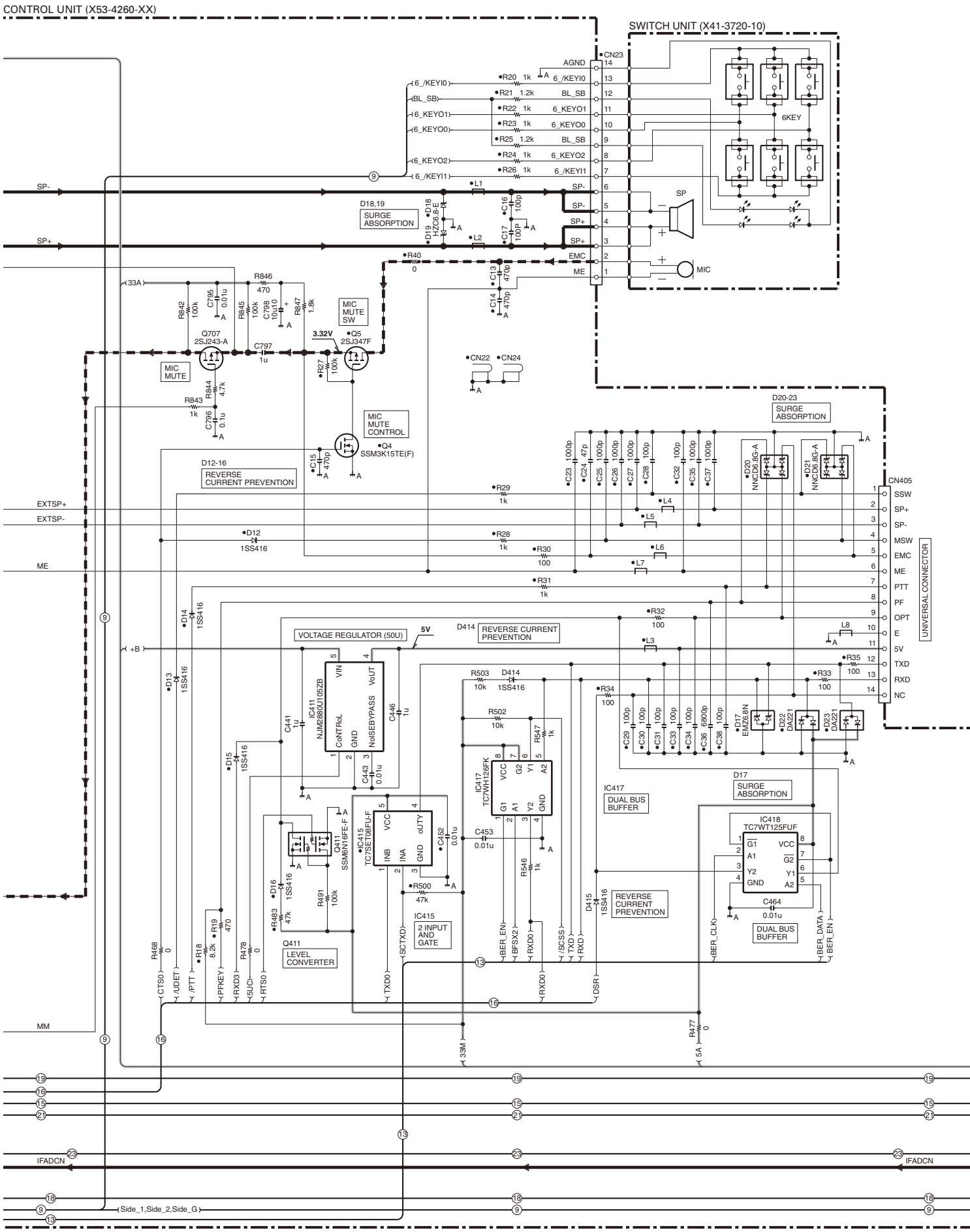

NX-200 SCHEMATIC DIAGRAM

CONTROL UNIT (X53-4260-XX)

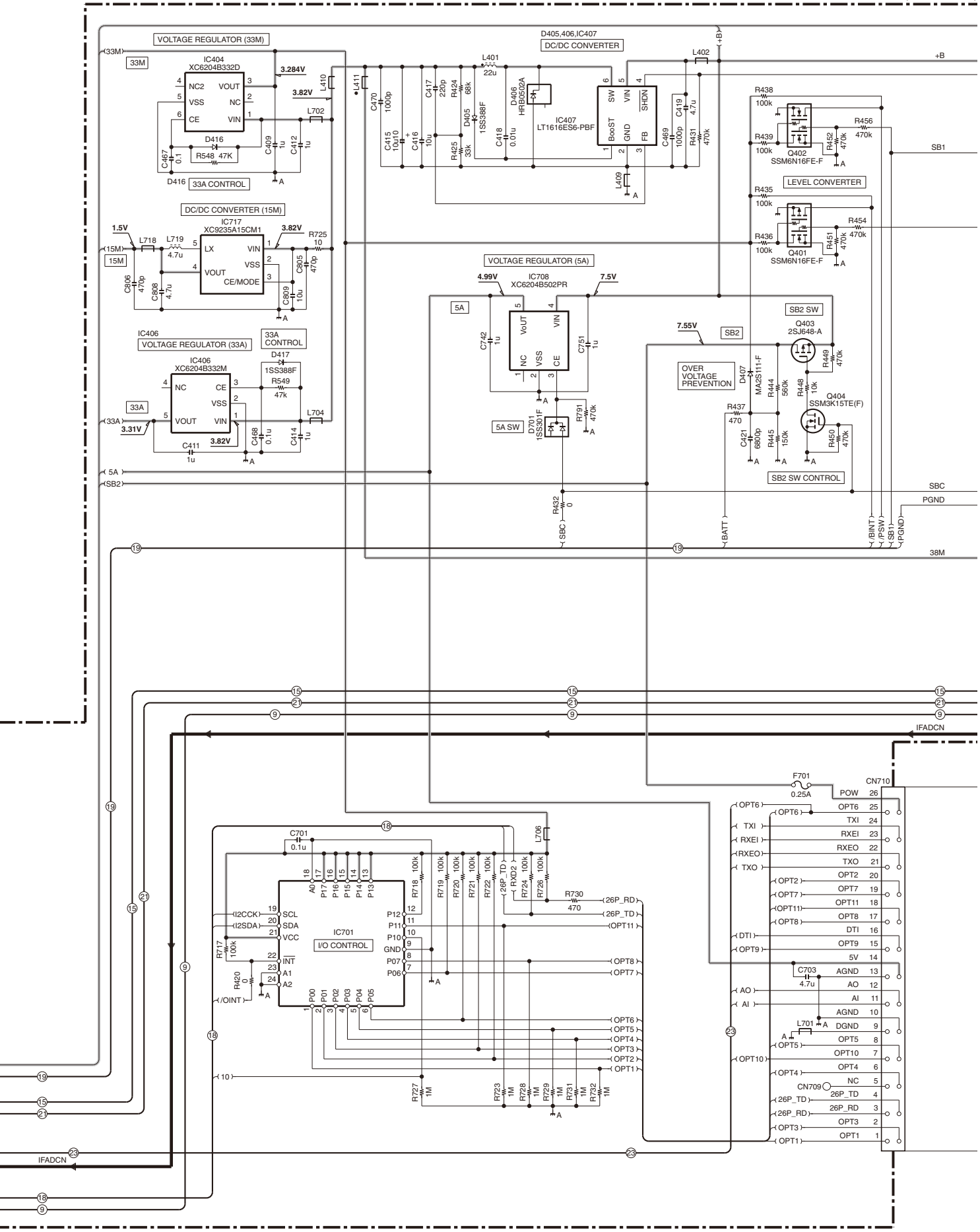

SCHEMATIC DIAGRAM NX-200

CONTROL UNIT (X53-4260-XX)

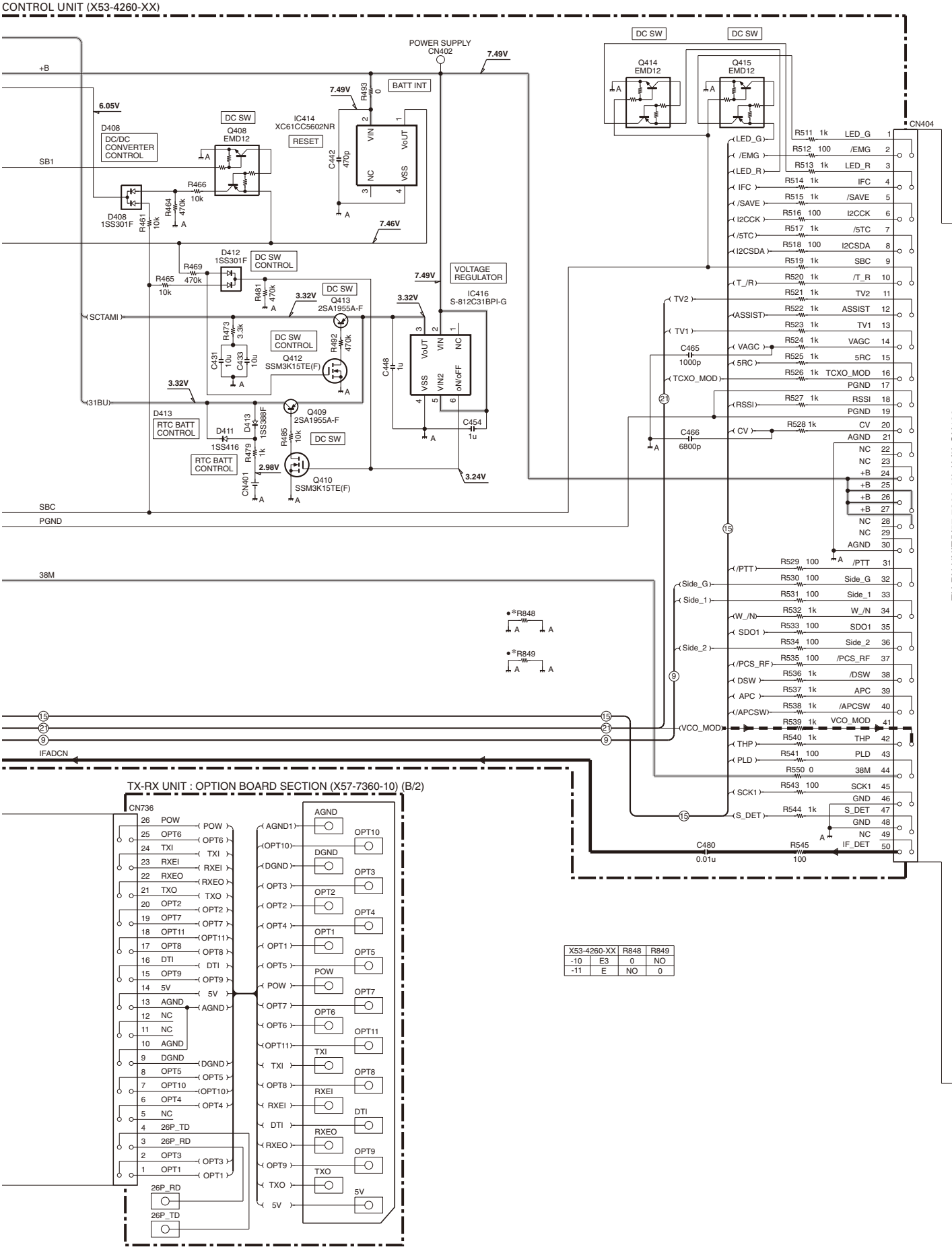

X53-4260-XX	R848	R849
-10	E3	0	NO
-11	E	NO	0

NX-200 SCHEMATIC DIAGRAM

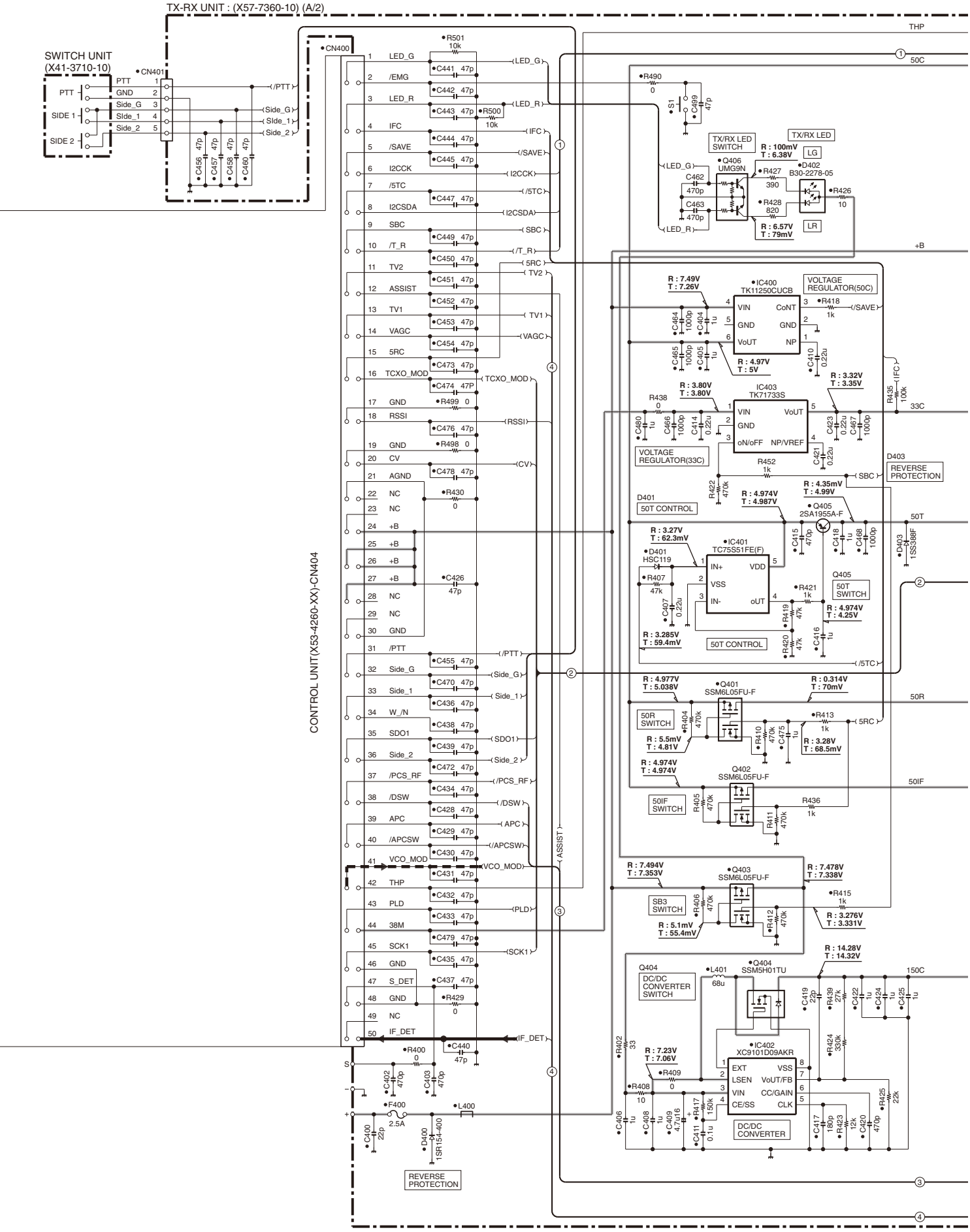

SCHEMATIC DIAGRAM NX-200

TX-RX UNIT (X57-7360-10) (A/2)

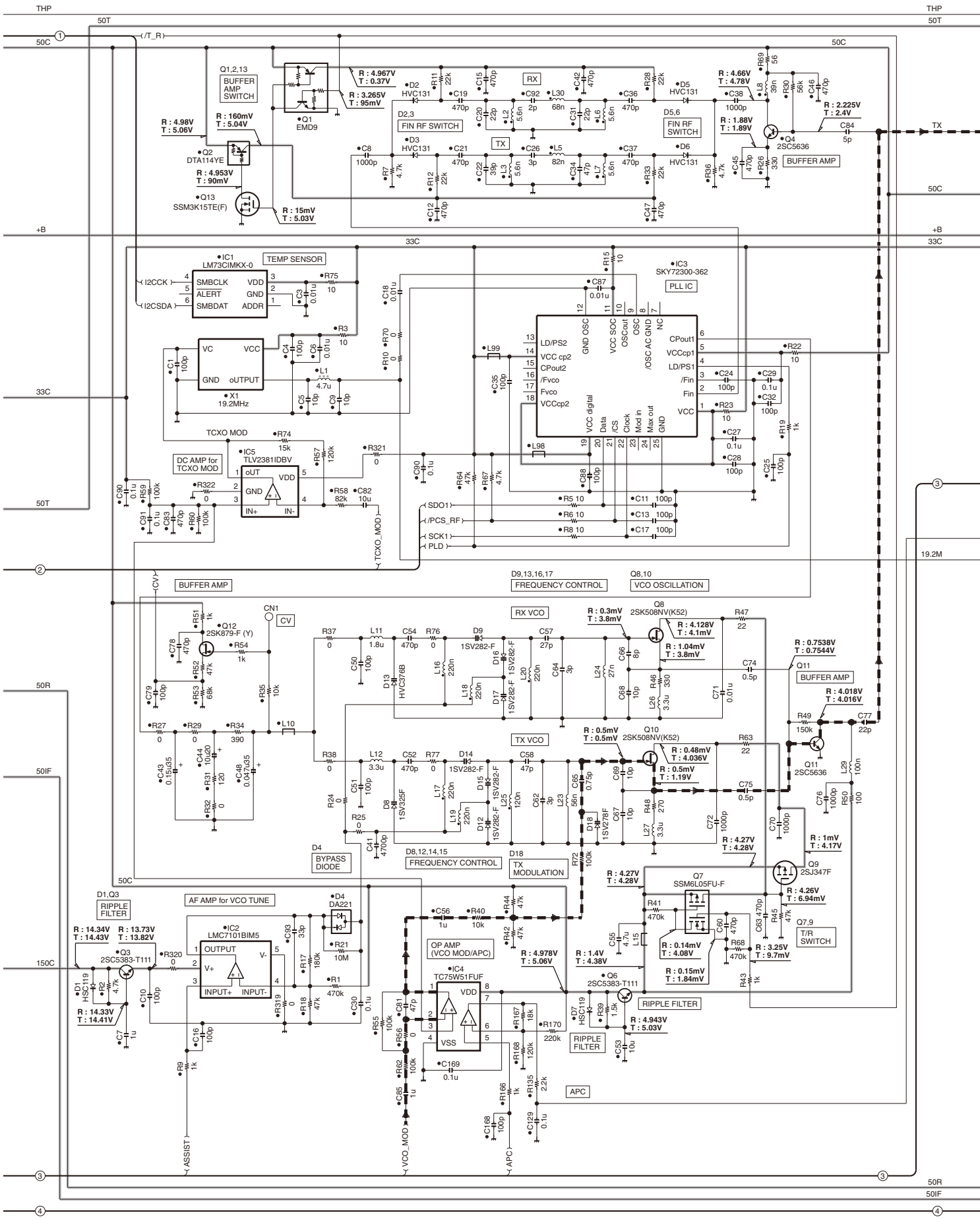

NX-200 SCHEMATIC DIAGRAM

TX-RX UNIT (X57-7360-10) (A/2)

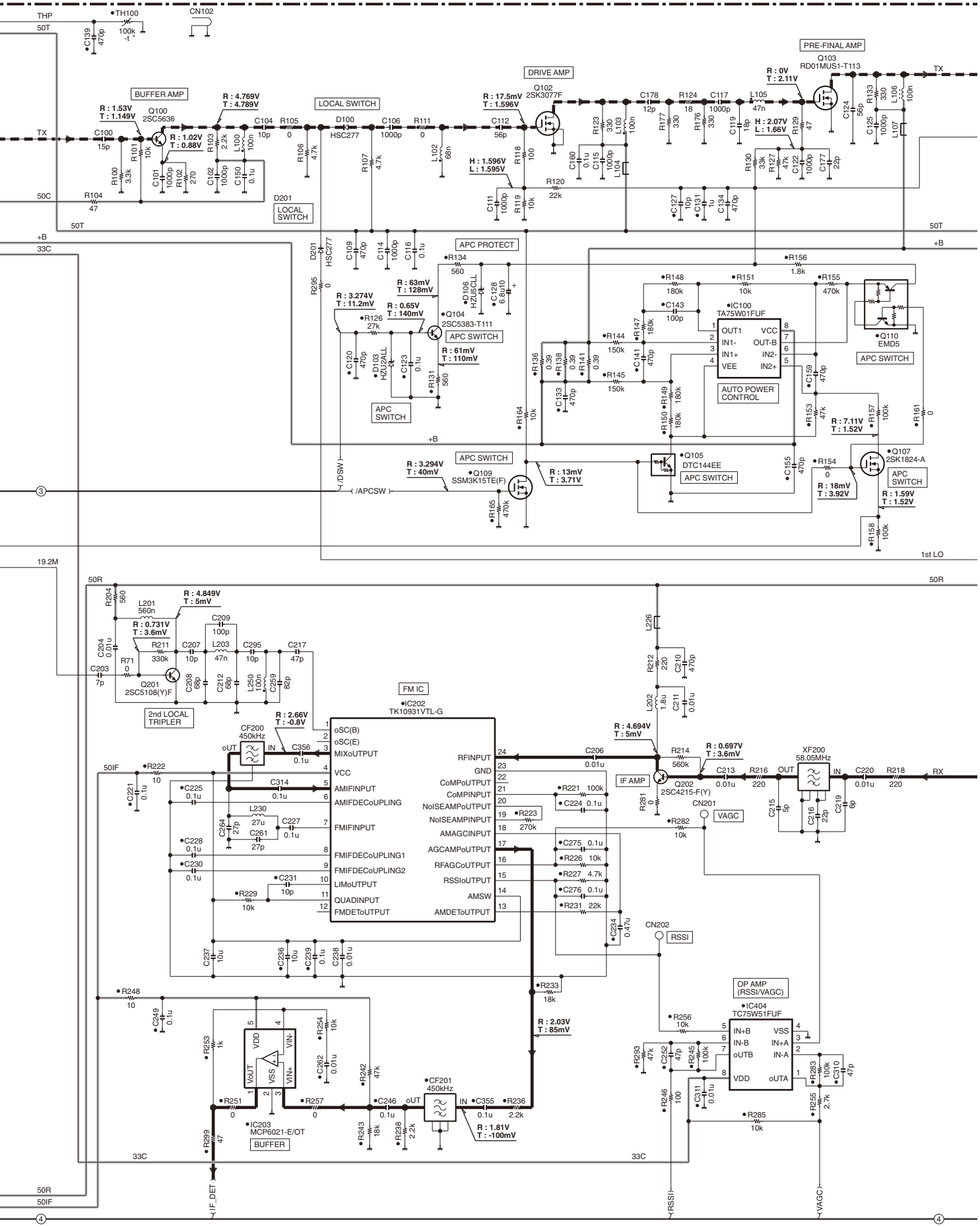

SCHEMATIC DIAGRAM NX-200

TX-RX UNIT (X57-7360-10) (A/2)

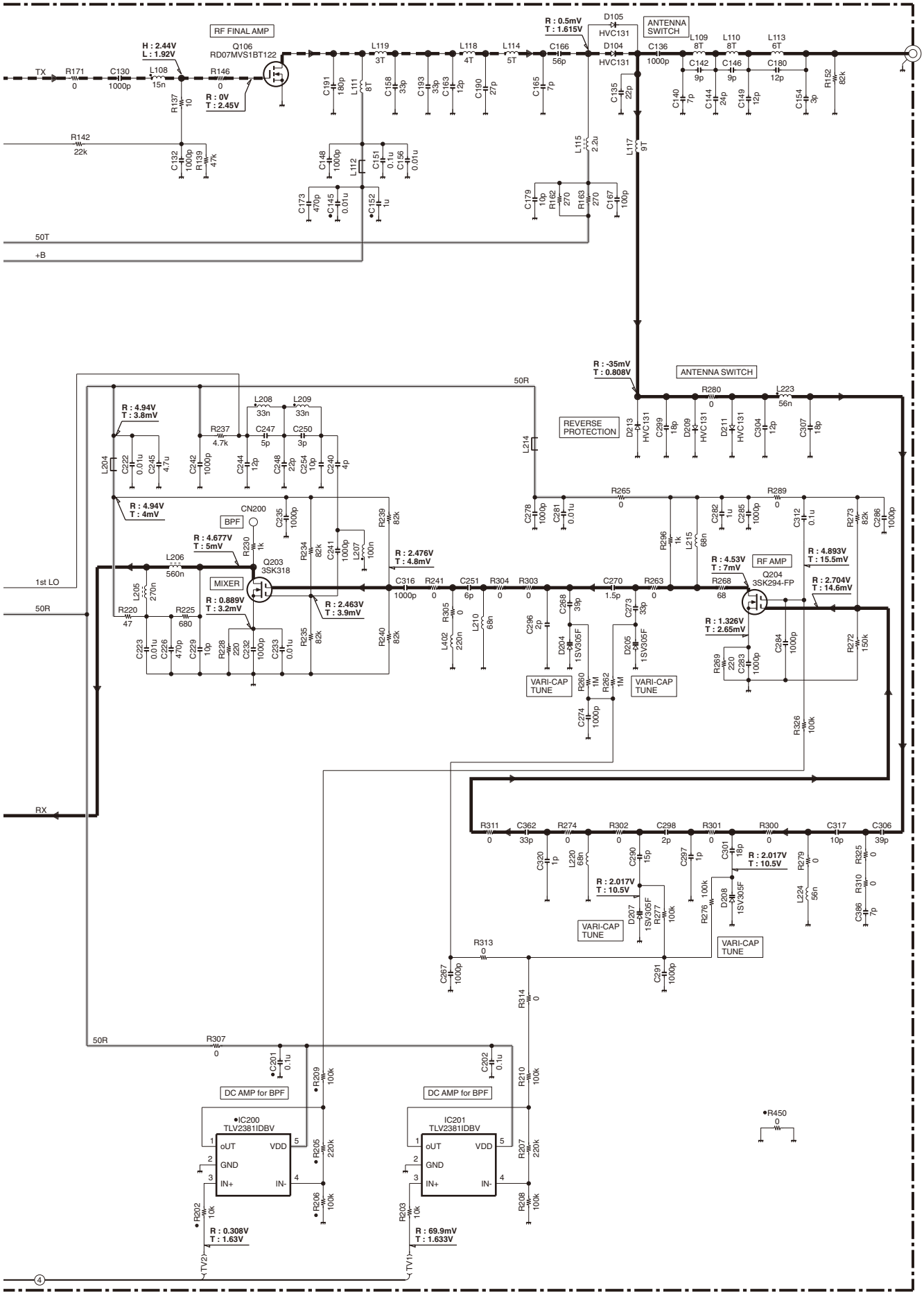

Note : The components marked with a dot (•) are parts of layer 1.

NX-200 BLOCK DIAGRAM

Control unit (X53-4260-XX)

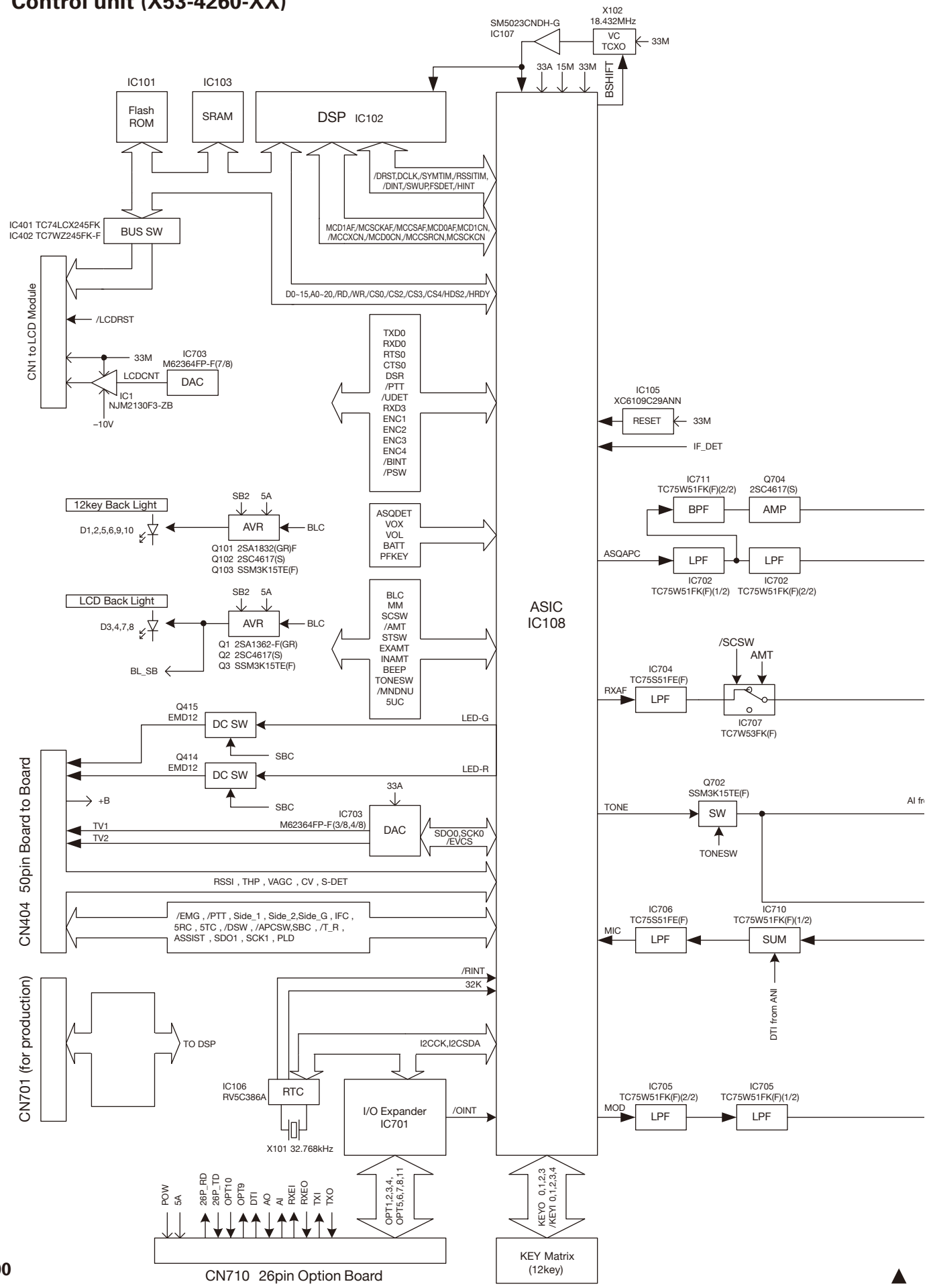

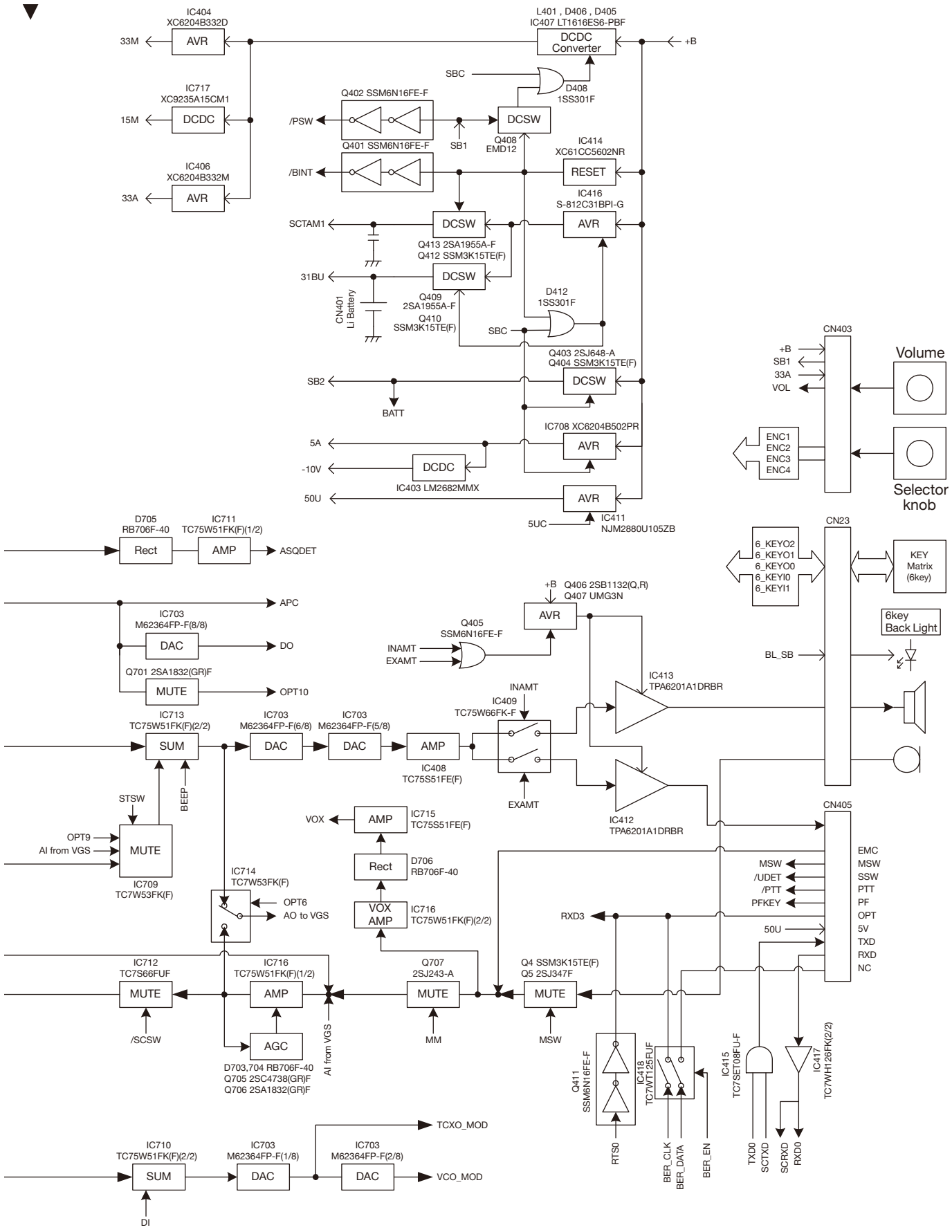
IC404
XC6204B332D
AVR
33M
L401 , D406 , D405
IC407 LT1616ES6-PBF
DCDC
Converter
+B
SBC
D408
1SS301F
IC717
XC9235A15CM1
DCDC
15M
Q402 SSM6N16FE-F
/PSW
DCSW
SB1
Q408
EMD12
Q401 SSM6N16FE-F
/BINT
IC414
XC61CC5602NR
RESET
IC406
XC6204B332M
AVR
33A
IC416
S-812C31BPI-G
AVR
SCTAM1
DCSW
Q413 2SA1955A-F
Q412 SSM3K15TE(F)
31BU
DCSW
CN401
Li Battery
Q409
2SA1955A-F
Q410
SSM3K15TE(F)
D412
1SS301F
SBC
Q403 2SJ648-A
Q404 SSM3K15TE(F)
SB2
DCSW
BATT
IC708 XC6204B502PR
5A
AVR
-10V
DCDC
IC403 LM2682MMX
50U
AVR
5UC
IC411
NJM2880U105ZB
CN403
+B
SB1
33A
VOL
Volume
ENC1
ENC2
ENC3
ENC4
Selector
knob
D705
RB706F-40
IC711
TC75W51FK(F)(1/2)
Rect
AMP
ASQDET
CN23
6_KEYO2
6_KEYO1
6_KEYO0
6_KEYI0
6_KEYI1
KEY
Matrix
(6key)
APC
IC703
M62364FP-F(8/8)
DAC
DO
+B
Q406 2SB1132(Q,R)
Q407 UMG3N
AVR
Q405
SSM6N16FE-F
INAMT
EXAMT
6key
Back Light
BL_SB
Q701 2SA1832(GR)F
MUTE
OPT10
IC413
TPA6201A1DRBR
INAMT
IC409
TC75W66FK-F
IC713
TC75W51FK(F)(2/2)
SUM
IC703
M62364FP-F(6/8)
DAC
IC703
M62364FP-F(5/8)
DAC
AMP
IC408
TC75S51FE(F)
EXAMT
IC412
TPA6201A1DRBR
STSW
BEEP
VOX
AMP
IC715
TC75S51FE(F)
CN405
OPT9
AI from VGS
MUTE
IC709
TC7W53FK(F)
Rect
D706
RB706F-40
EMC
MSW
SSW
PTT
PF
OPT
5V
TXD
RXD
NC
MSW
/UDET
/PTT
PFKEY
IC714
TC7W53FK(F)
OPT6
AO to VGS
VOX
AMP
IC716
TC75W51FK(F)(2/2)
RXD3
50U
IC712
TC7S66FUF
MUTE
IC716
TC75W51FK(F)(1/2)
AMP
Q707
2SJ243-A
MUTE
Q4 SSM3K15TE(F)
Q5 2SJ347F
MUTE
/SCSW
AGC
AI from VGS
MM
MSW
D703,704 RB706F-40
Q705 2SC4738(GR)F
Q706 2SA1832(GR)F
Q411
SSM6N16FE-F
IC418
TC7WT125FUF
IC415
TC7SET08FU-F
IC417
TC7WH126FK(2/2)
RTS0
BER_CLK
BER_DATA
BER_EN
TXD0
SCTXD
SCRXD
RXD0
TCXO_MOD
IC710
TC75W51FK(F)(2/2)
SUM
IC703
M62364FP-F(1/8)
DAC
IC703
M62364FP-F(2/8)
DAC
VCO_MOD
DI

BLOCK DIAGRAM

TX-RX unit (X57-7360-10)

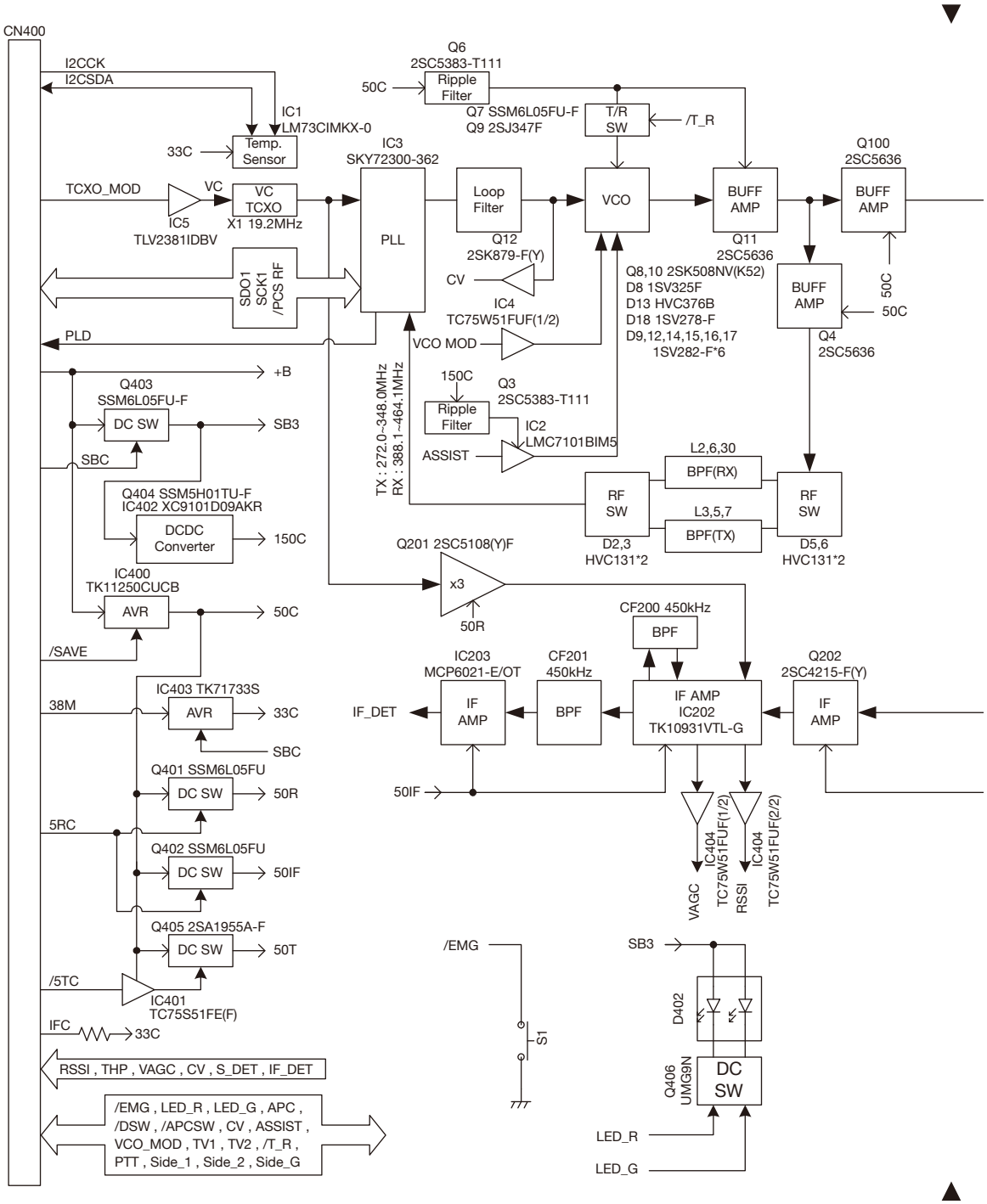

BLOCK DIAGRAM

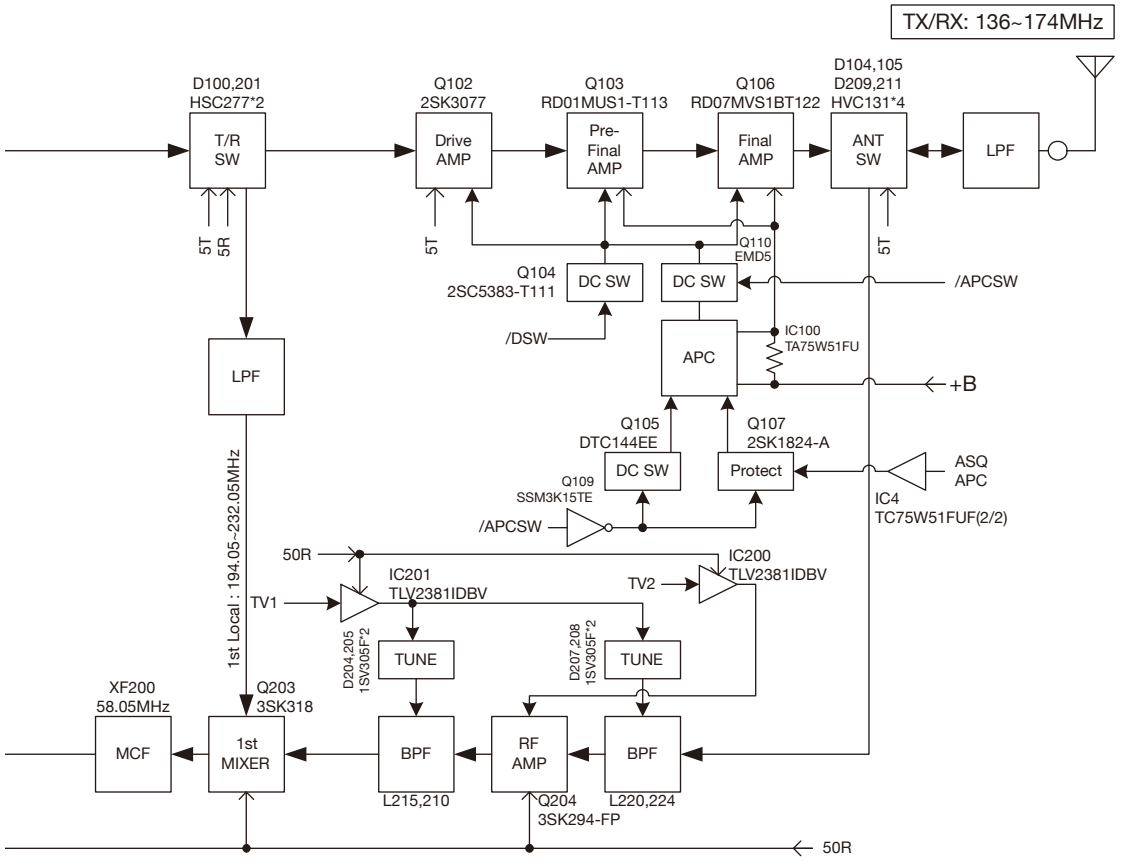

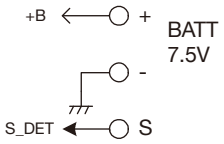

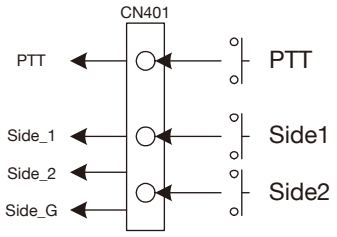

LEVEL DIAGRAM

Receiver Section

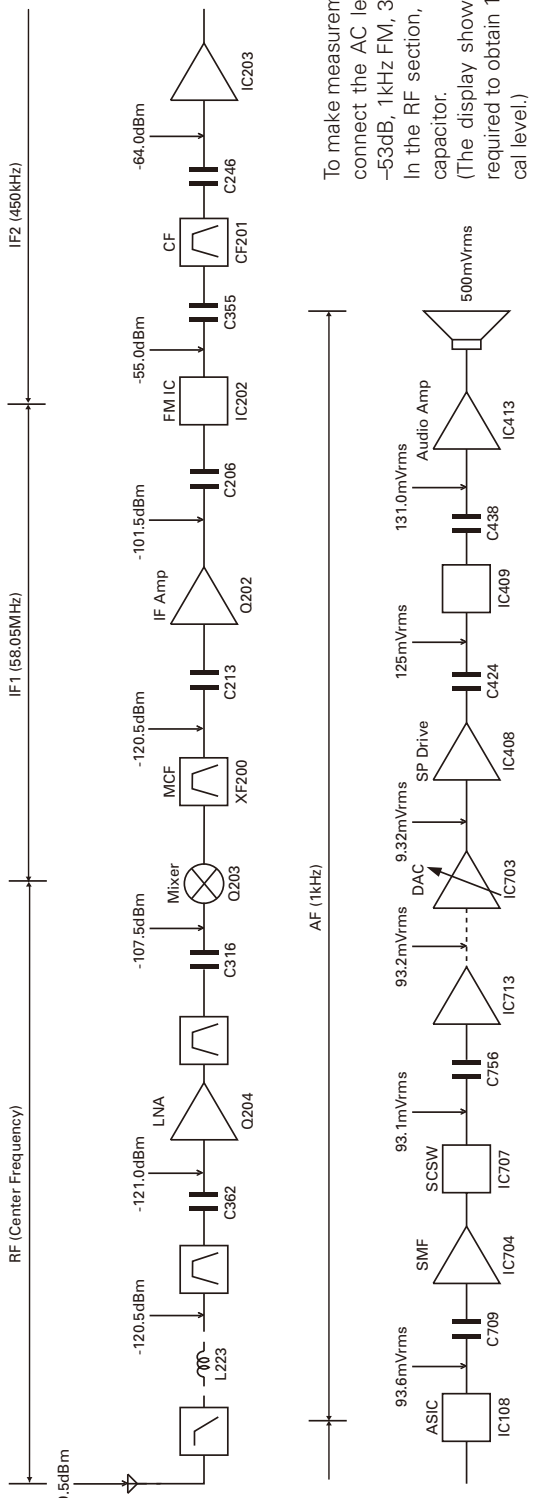

To make measurements in the AF section, connect the AC level meter. (ANT input: –53dB, 1kHz FM, 3kHz DEV (Wide)
In the RF section, use a 1000pF coupling capacitor.
(The display shows the SSG input value required to obtain 12dB SINAD without local level.)

Transmitter Section

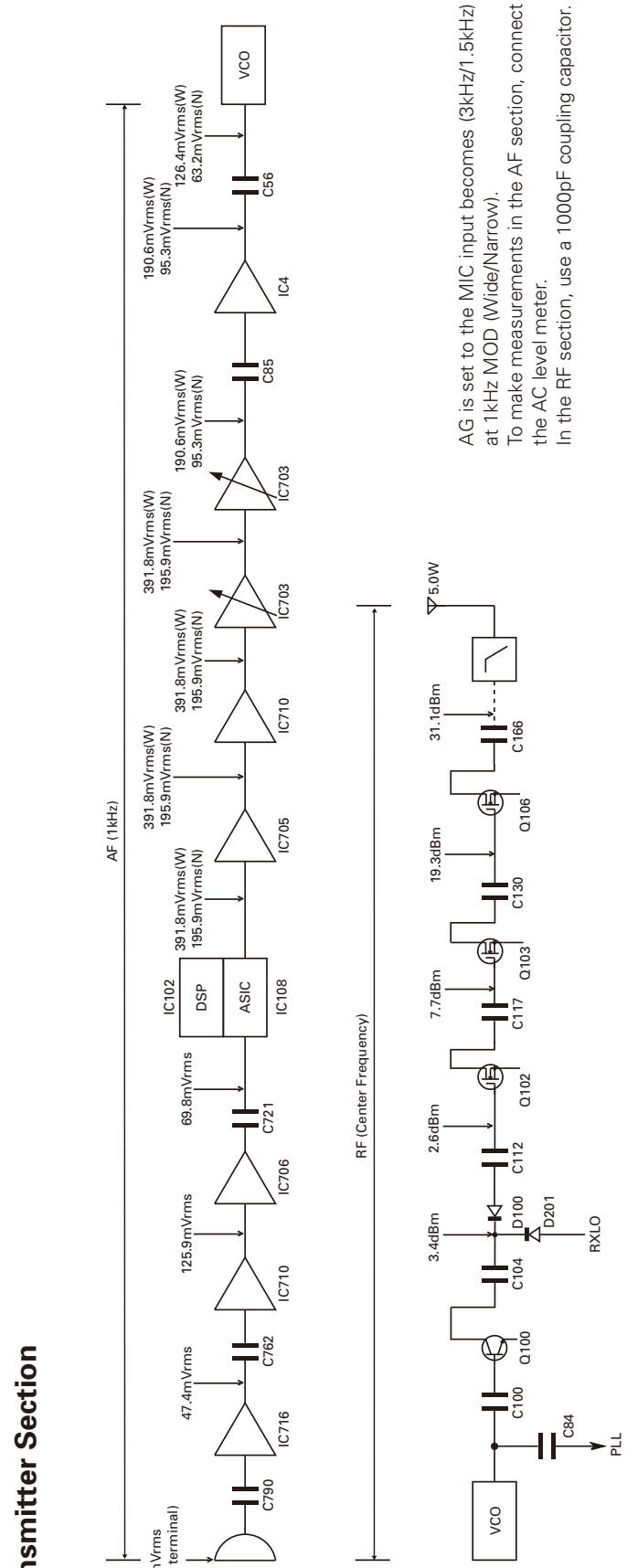

AG is set to the MIC input becomes (3kHz/1.5kHz) at 1kHz MOD (Wide/Narrow).
To make measurements in the AF section, connect the AC level meter.
In the RF section, use a 1000pF coupling capacitor.

OPTIONAL ACCESSORIES

KNB-47L (Li-ion Battery Pack)

■ External View

■ Specifications

Voltage.....7.4V
Battery capacity..... 1950mAh

■ Schematic Diagram

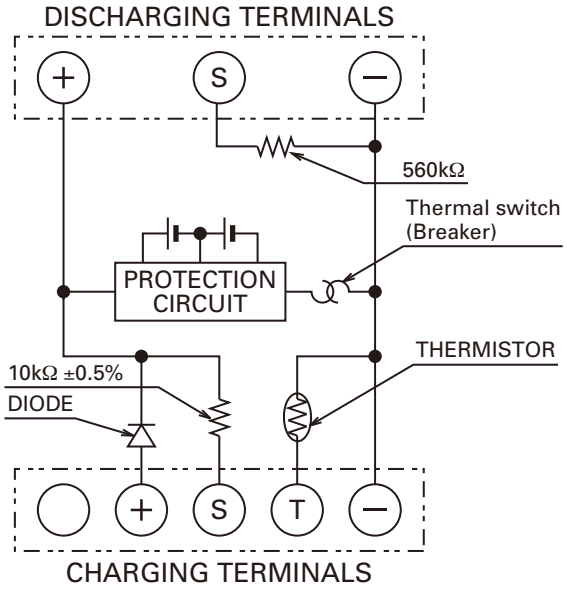

KNB-48L (Li-ion Battery Pack)

■ External View

■ Specifications

Voltage.....7.4V
Battery capacity..... 2550mAh

■ Schematic Diagram

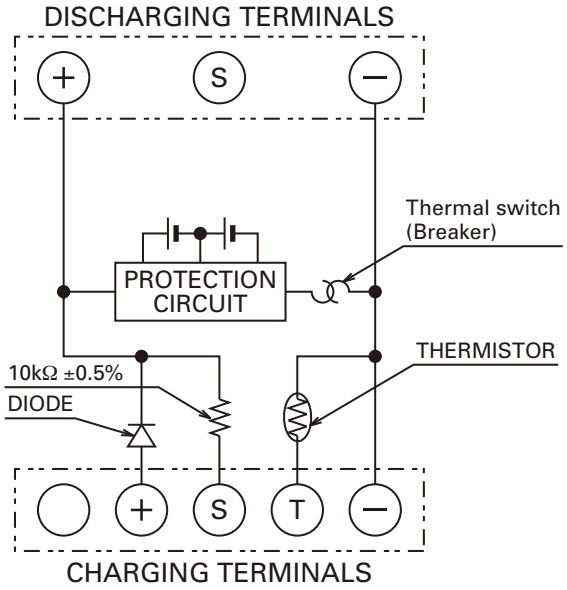

NX-200

SPECIFICATIONS

GENERAL

Models	E3: Basic Model E: w/12-key Model
Frequency Range	136~174 MHz
Number of Channels	512
Zones	128
Max. Channels per Zone	250
Channel Spacing	Analogue: 12.5/20/25 kHz Digital: 6.25/12.5 kHz
Operating Voltage	7.5V DC ± 20%
Battery Life (with KNB-48L)	5-5-90 duty cycle: More than 12.5 hours 10-10-80 duty cycle: More than 8.5 hours
Operating Temperature Range	–30°C to +60°C
Frequency Stability	±2.0ppm
Antenna Impedance	50Ω
Dimensions (W x H x D) (Projections not included)	
Radio only	58 x 127.5 x 41.3 mm
with KNB-47L	58 x 127.5 x 41.3 mm
with KNB-48L	58 x 127.5 x 48.5 mm
Weight (net)	
Radio only	250 g
with KNB-47L	375 g
with KNB-48L	405 g

RECEIVER

Sensitivity (Analogue)	
EIA 12dB SINAD	25kHz: 0.28μV 20kHz: 0.28μV 12.5kHz: 0.32μV
EN 20dB SINAD	25kHz: –3dBμV 20kHz: –3dBμV 12.5kHz: –1dBμV
Sensitivity (Digital)	
3% BER	12.5kHz: 0.32μV 6.25kHz: 0.25μV
1% BER	12.5kHz: –1dBμV 6.25kHz: –4dBμV
Adjacent Channel Selectivity (Analogue)	25kHz: 76dB 20kHz: 74dB 12.5kHz: 68dB
Intermodulation (Analogue)	65dB
Spurious Response Rejection (Analogue)	75dB
Audio Distortion	Less than 3%
Audio Output	500mW/8Ω

TRANSMITTER

RF Power Output High/Low	5W/1W
Modulation Limiting (Analogue)	±5.0kHz at 25kHz ±4.0kHz at 20kHz ±2.5kHz at 12.5kHz
Spurious Emission	–36dBm ≤ 1GHz, –30dBm > 1GHz
FM Noise (EIA) (Analogue)	25kHz: 45dB 20kHz: 45dB 12.5kHz: 40dB
Modulation Distortion	Less than 3%
Microphone Impedance	1.8kΩ
Modulation	16K0F3E, 14K0F3E, 14K0F2D, 12K0F2D, 8K50F3E, 7K50F2D, 8K30F1E, 8K30F1D, 8K30F7W, 4K00F1E, 4K00F1D, 4K00F7W, 4K00F2D

Analogue measurements made per EN standards or TIA/EIA 603 and specifications shown are typical.
KENWOOD reserves the right to change specifications without prior notice or obligation.

Kenwood Corporation

2967-3, Ishikawa-machi, Hachioji-shi, Tokyo, 192-8525 Japan

Kenwood U.S.A. Corporation
P.O. BOX 22745, 2201 East Dominguez Street, Long Beach, CA 90801-5745, U.S.A.

Kenwood Electronics Canada Inc.
6070 Kestrel Road, Mississauga, Ontario, Canada L5T 1S8

Kenwood Electronics Deutschland GmbH
Rembrücker Str. 15, 63150 Heusenstamm, Germany

Kenwood Electronics Belgium N.V.
Leuvensesteenweg 248 J, 1800 Vilvoorde, Belgium

Kenwood Electronics France S.A.
L'Etoile Paris Nord 2, 50 Allée des Impressionnistes, Bp 58416 Villepinte, 95944 Roissy Ch De Gaulle Cedex

Kenwood Electronics UK Limited
KENWOOD House, Dwight Road, Watford, Herts., WD18 9EB United Kingdom

Kenwood Electronics Europe B.V.
Amsterdamseweg 37, 1422 AC Uithoorn, The Netherlands

Kenwood Electronics Italia S.p.A.
Via G. Sirtori, 7/9 20129 Milano, Italy

Kenwood Ibérica, S.A.
Bolivia, 239-08020 Barcelona, Spain

Kenwood Electronics Australia Pty. Ltd.
(A.C.N. 001 499 074)
16 Giffnock Avenue, Centrecourt Estate, North Ryde, N.S.W. 2113 Australia

Kenwood Electronics (Hong Kong) Ltd.
Unit 3712-3724, Level 37, Tower one Metroplaza, 223 Hing Fong Road, Kwai Fong, N.T., Hong Kong

Kenwood Electronics Singapore Pte Ltd
1 Ang Mo Kio Street 63, Singapore 569110

25%

NX-200 PC BOARD

PC BOARD NX-200

CONTROL UNIT (X53-4260-XX) -10: E3 -11: E
Component side view (J79-0131-29)

CONTROL UNIT (X53-4260-XX) -10: E3 -11: E
Component side view (J79-0131-29)

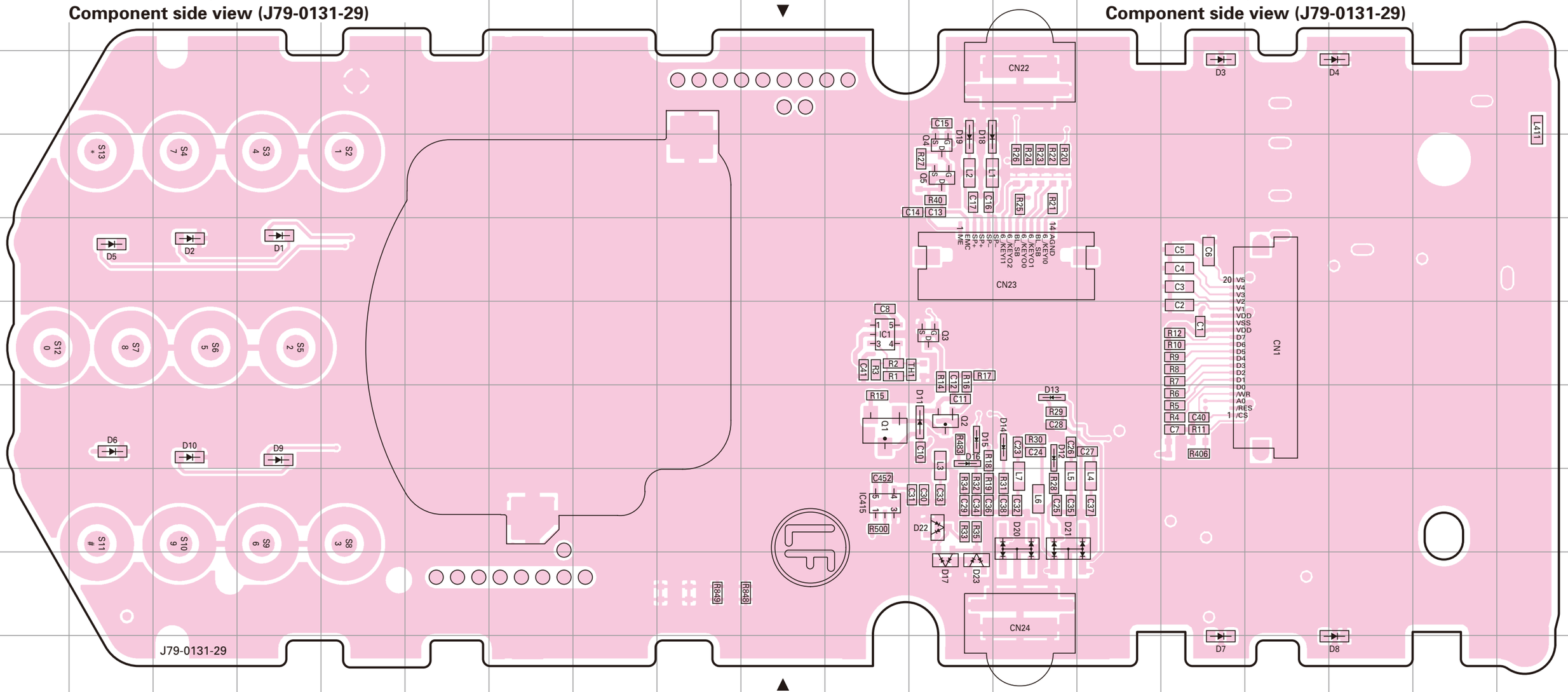

Ref. No.	Address	Ref. No.	Address	Ref. No.	Address
IC1	6K	D4	3Q	D14	7M
IC415	8K	D5	5B	D15	7L
Q1	7K	D6	7B	D16	7L
Q2	7L	D7	10O	D17	9L
Q3	6L	D8	10Q	D18	4L
Q4	4L	D9	7D	D19	4L
Q5	4L	D10	7C	D20	8M
D1	5D	D11	7L	D21	8M
D2	5C	D12	7M	D22	8L
D3	3O	D13	7M	D23	9L

Component side
Layer 1
Layer 2
Layer 3
Layer 4
Layer 5
Layer 6
Foil side

NX-200 PC BOARD

PC BOARD NX-200

CONTROL UNIT (X53-4260-XX) -10: E3 -11: E
Foil side view (J79-0131-29)

CONTROL UNIT (X53-4260-XX) -10: E3 -11: E
Foil side view (J79-0131-29)

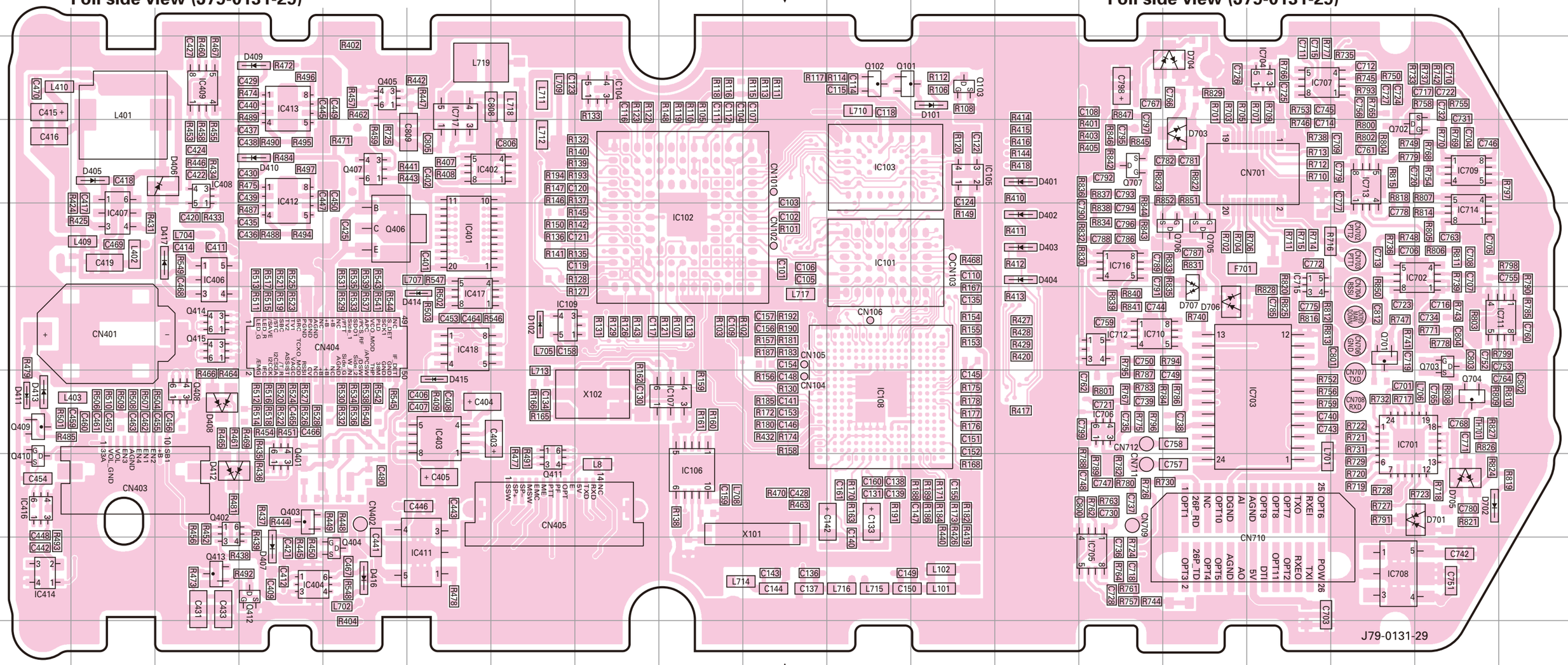

Ref. No.	Address	Ref. No.	Address	Ref. No.	Address	Ref. No.	Address	Ref. No.	Address	Ref. No.	Address	Ref. No.	Address	Ref. No.	Address
IC101	5K	IC404	9D	IC701	7Q	IC713	4Q	Q405	3E	Q702	4R	D405	4B	D417	5C
IC102	5I	IC406	5C	IC702	5R	IC714	5R	Q406	5E	Q703	6R	D406	4C	D701	8R
IC103	4K	IC407	5B	IC703	7P	IC715	5P	Q407	4E	Q704	7R	D407	9D	D702	8R
IC104	3H	IC408	4C	IC704	3P	IC716	5N	Q408	7C	Q705	5O	D408	7C	D703	4O
IC105	4L	IC409	3C	IC705	9N	IC717	3F	Q409	7A	Q706	5O	D409	3D	D704	3O
IC106	8I	IC411	9F	IC706	7N	Q101	3K	Q410	8A	Q707	4N	D410	4D	D705	8R
IC107	7I	IC412	4D	IC707	3P	Q102	3K	Q411	8G	D101	3L	D411	7A	D706	6O
IC108	7K	IC413	3D	IC708	9Q	Q103	3L	Q412	9D	D102	6G	D412	8C	D707	6O
IC109	6G	IC414	9A	IC709	4R	Q401	8D	Q413	9C	D401	4M	D413	7A		
IC401	5F	IC416	8A	IC710	6N	Q402	8C	Q414	6C	D402	5M	D414	6F		
IC402	4F	IC417	6F	IC711	6S	Q403	8D	Q415	6C	D403	5M	D415	7F		
IC403	7F	IC418	6F	IC712	6N	Q404	9E	Q701	6Q	D404	5M	D416	9E		

Component side
Layer 1
Layer 2
Layer 3
Layer 4
Layer 5
Layer 6
Foil side

NX-200 PC BOARD

PC BOARD NX-200

TX-RX UNIT (X57-7360-10) (A/2)
Component side view (J79-0127-39 A/2)

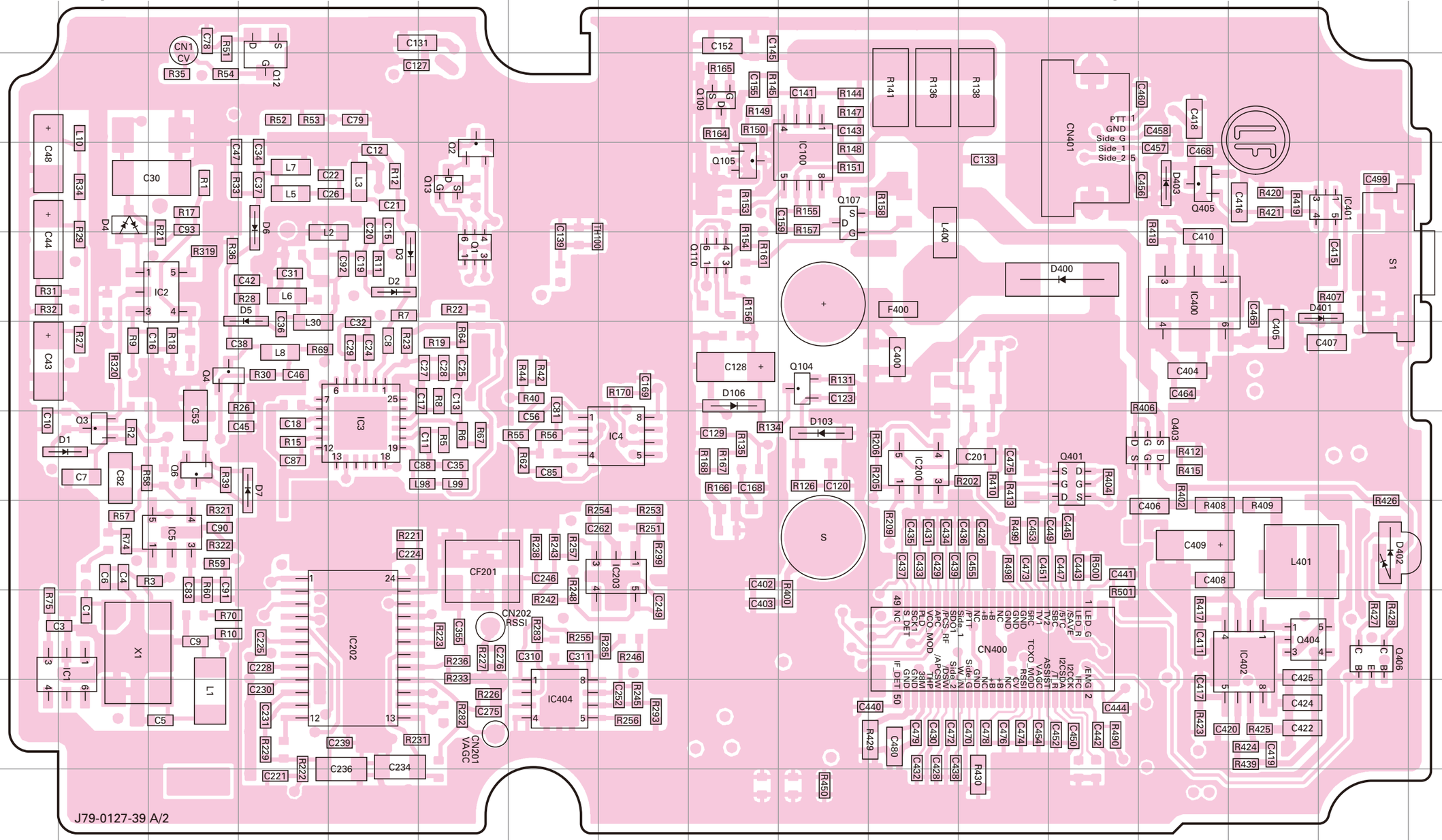

TX-RX UNIT (X57-7360-10) (B/2)

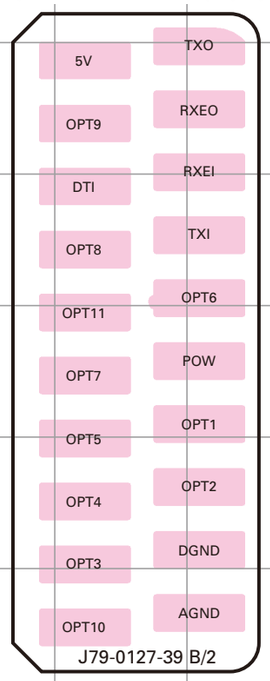

Component side
Layer 1
Layer 2
Layer 3
Layer 4
Layer 5
Layer 6
Foil side

Ref. No.	Address	Ref. No.	Address	Ref. No.	Address	Ref. No.	Address	Ref. No.	Address	Ref. No.	Address
IC1	9B	IC203	8H	Q4	6C	Q110	5I	D3	5E	D401	5P
IC2	5C	IC400	5N	Q6	7C	Q401	7M	D4	4B	D402	8P
IC3	7E	IC401	4P	Q12	3D	Q403	7N	D5	5D	D403	4N
IC4	7H	IC402	9O	Q13	4F	Q404	9O	D6	4D		
IC5	8C	IC404	10G	Q104	6J	Q405	4N	D7	7D		
IC100	4J	Q1	5F	Q105	4I	Q406	9P	D103	7J		
IC200	7K	Q2	4F	Q107	4J	D1	7B	D106	6I		
IC202	9E	Q3	7B	Q109	3I	D2	5E	D400	5M		

NX-200 PC BOARD

PC BOARD NX-200

TX-RX UNIT (X57-7360-10) (A/2)
Foil side view (J79-0127-39 A/2)

TX-RX UNIT (X57-7360-10) (A/2)
Foil side view (J79-0127-39 A/2)

TX-RX UNIT (X57-7360-10) (B/2)

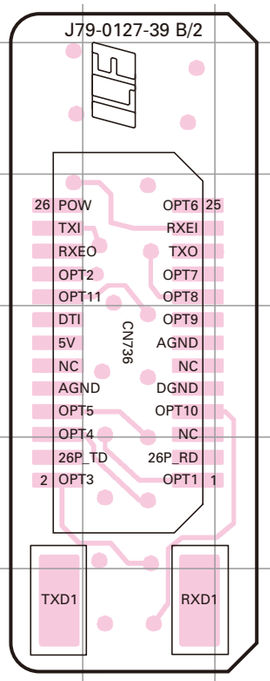

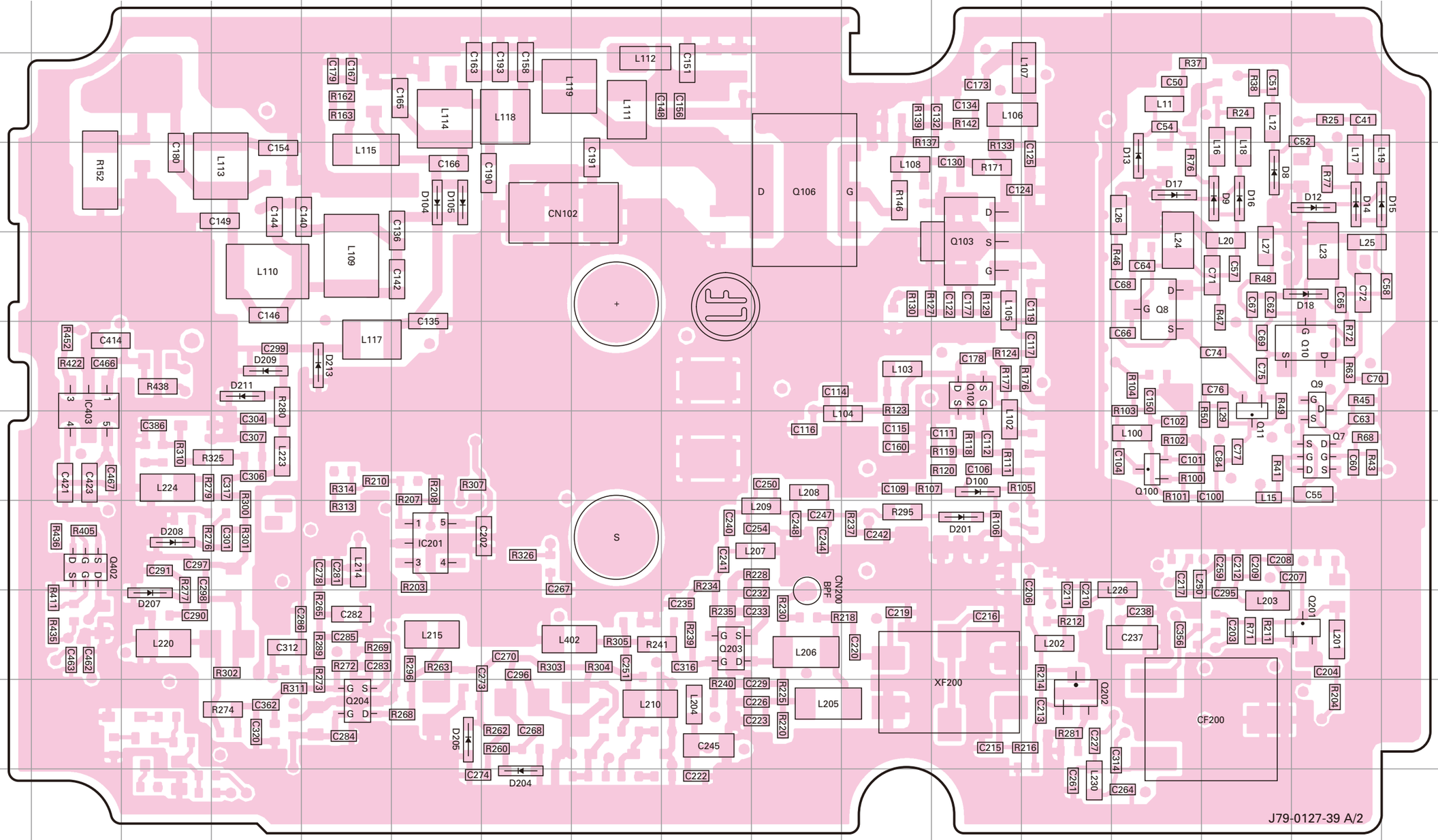

Component side
Layer 1
Layer 2
Layer 3
Layer 4
Layer 5
Layer 6
Foil side

Ref. No.	Address	Ref. No.	Address	Ref. No.	Address	Ref. No.	Address	Ref. No.	Address	Ref. No.	Address
IC201	8H	Q100	7P	Q204	10G	D15	4S	D201	8N	D213	6G
IC403	7D	Q102	6N	Q402	8D	D16	4Q	D204	11I		
Q7	7R	Q103	5N	D8	4Q	D17	4P	D205	10H		
Q8	5P	Q106	4L	D9	4Q	D18	5R	D207	9E		
Q9	6R	Q201	9R	D12	4R	D100	7N	D208	8E		
Q10	6R	Q202	10O	D13	4P	D104	4H	D209	6F		
Q11	7Q	Q203	9K	D14	4R	D105	4H	D211	6F		

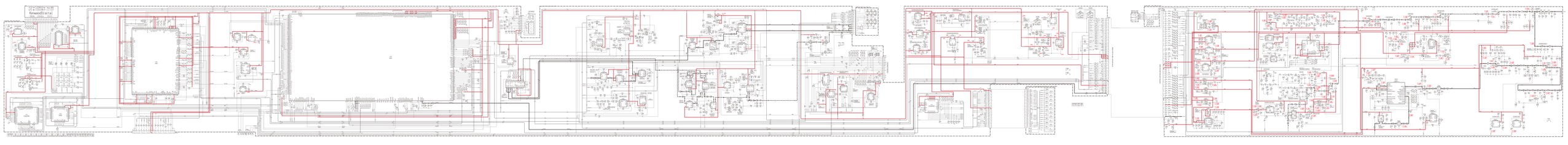

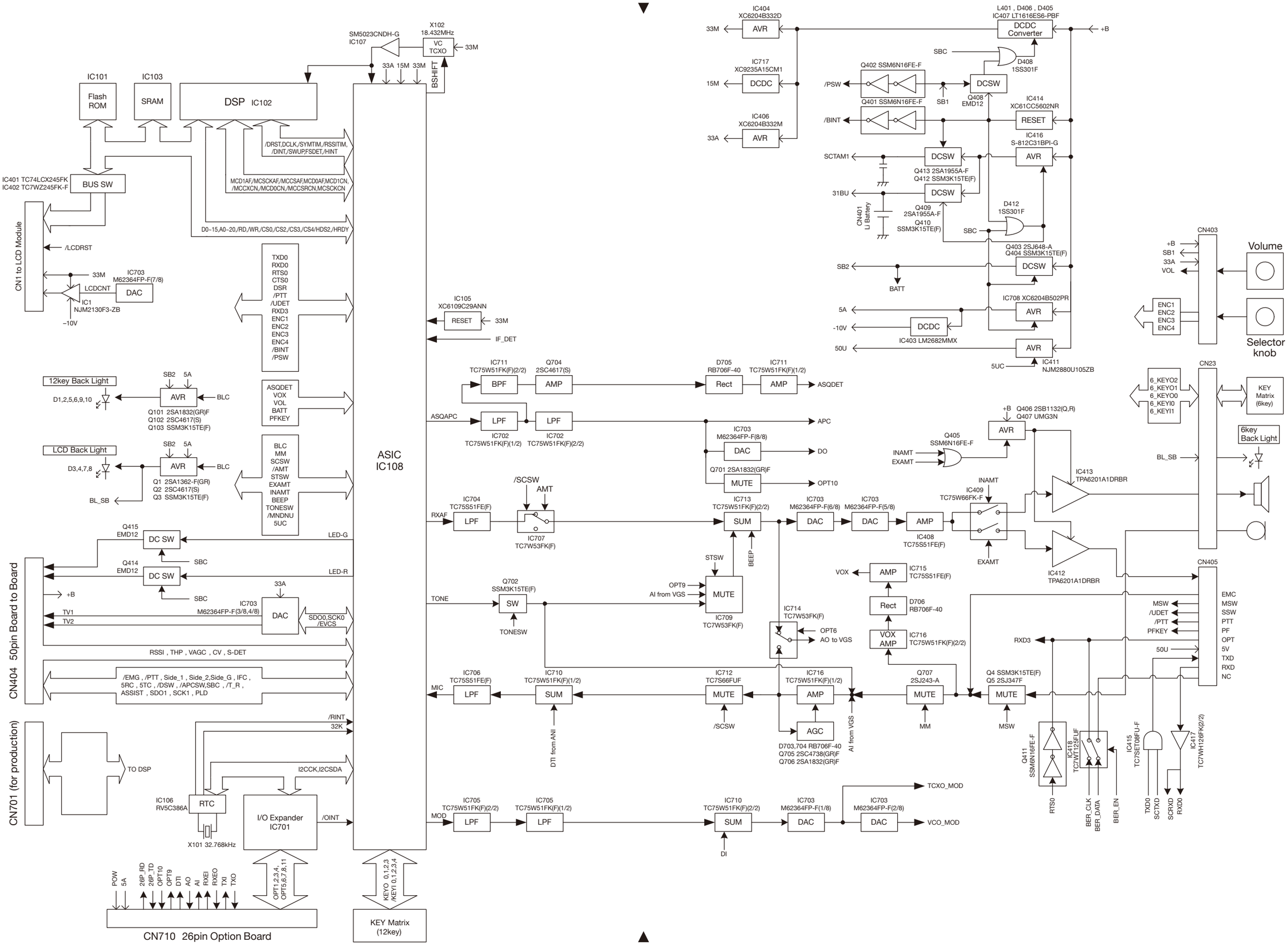
IC101
Flash ROM
IC103
SRAM
DSP IC102
SM5023CNDH-G
IC107
X102
18.432MHz
VC TCXO
33M
33A 15M 33M
BSHIFT
/DRST,DCLK,/SYMTIM,/RSSITIM,
/DINT,/SWUP,FSDET,/HINT
MCD1AF,/MCSCKAF,/MCCSAF,MCD0AF,MCD1CN,
/MCCXCN,/MCD0CN,/MCCSRCN,MCSCKCN
D0~15,A0~20,/RD,/WR,/CS0,/CS2,/CS3,/CS4/HDS2,/HRDY
IC401 TC74LCX245FK
IC402 TC7WZ245FK-F
BUS SW
CN1 to LCD Module
/LCDRST
33M
IC703
M62364FP-F(7/8)
LCDCNT
DAC
IC1
NJM2130F3-ZB
-10V
TXD0
RXD0
RTS0
CTS0
DSR
/PTT
/UDET
RXD3
ENC1
ENC2
ENC3
ENC4
/BINT
/PSW
12key Back Light
D1,2,5,6,9,10
SB2 5A
AVR
BLC
Q101 2SA1832(GR)F
Q102 2SC4617(S)
Q103 SSM3K15TE(F)
ASQDET
VOX
VOL
BATT
PFKEY
LCD Back Light
D3,4,7,8
Q1 2SA1362-F(GR)
Q2 2SC4617(S)
Q3 SSM3K15TE(F)
BL_SB
BLC
MM
SCSW
/AMT
STSW
EXAMT
INAMT
BEEP
TONESW
/MNDNU
5UC
ASIC
IC108
Q415
EMD12
DC SW
LED-G
Q414
EMD12
DC SW
LED-R
SBC
+B
TV1
TV2
33A
IC703
M62364FP-F(3/8,4/8)
DAC
SDO0,SCK0
/EVCS
RSSI , THP , VAGC , CV , S-DET
CN404 50pin Board to Board
/EMG , /PTT , Side_1 , Side_2,Side_G , IFC ,
5RC , 5TC , /DSW , /APCSW,SBC , /T_R ,
ASSIST , SDO1 , SCK1 , PLD
CN701 (for production)
TO DSP
/RINT
32K
I2CCK,I2CSDA
IC106
RV5C386A
RTC
X101 32.768kHz
I/O Expander
IC701
/OINT
POW
5A
26P_RD
26P_TD
OPT10
OPT9
DTI
AO
AI
RXEI
RXEO
TXI
TXO
OPT1,2,3,4,
OPT5,6,7,8,11
CN710 26pin Option Board
KEY0 0,1,2,3
/KEY1 0,1,2,3,4
KEY Matrix
(12key)
IC105
XC6109C29ANN
RESET
33M
IF_DET
IC711
TC75W51FK(F)(2/2)
BPF
Q704
2SC4617(S)
AMP
D705
RB706F-40
Rect
IC711
TC75W51FK(F)(1/2)
AMP
ASQDET
ASQAPC
LPF
IC702
TC75W51FK(F)(1/2)
LPF
IC702
TC75W51FK(F)(2/2)
APC
IC703
M62364FP-F(8/8)
DAC
DO
Q701 2SA1832(GR)F
MUTE
OPT10
/SCSW
AMT
RXAF
IC704
TC75S51FE(F)
LPF
IC707
TC7W53FK(F)
IC713
TC75W51FK(F)(2/2)
SUM
IC703
M62364FP-F(6/8)
DAC
IC703
M62364FP-F(5/8)
DAC
AMP
IC408
TC75S51FE(F)
IC409
TC75W66FK-F
INAMT
EXAMT
STSW
BEEP
OPT9
AI from VGS
MUTE
IC709
TC7W53FK(F)
Q702
SSM3K15TE(F)
TONE
SW
TONESW
IC714
TC7W53FK(F)
OPT6
AO to VGS
VOX
AMP
IC715
TC75S51FE(F)
Rect
D706
RB706F-40
VOX AMP
IC716
TC75W51FK(F)(2/2)
MIC
IC706
TC75S51FE(F)
LPF
IC710
TC75W51FK(F)(1/2)
SUM
IC712
TC7S66FUF
MUTE
IC716
TC75W51FK(F)(1/2)
AMP
Q707
2SJ243-A
MUTE
Q4 SSM3K15TE(F)
Q5 2SJ347F
MUTE
/SCSW
DTI from ANI
AGC
D703,704 RB706F-40
Q705 2SC4738(GR)F
Q706 2SA1832(GR)F
AI from VGS
MM
MSW
RXD3
50U
Q411
SSM6N16FE-F
IC418
TC7WT125FUF
IC415
TC7SET08FU-F
IC417
TC7WH126FK(2/2)
RTS0
BER_CLK
BER_DATA
BER_EN
TXD0
SCTXD
SCRXD
RXD0
MOD
IC705
TC75W51FK(F)(2/2)
LPF
IC705
TC75W51FK(F)(1/2)
LPF
IC710
TC75W51FK(F)(2/2)
SUM
DI
IC703
M62364FP-F(1/8)
DAC
IC703
M62364FP-F(2/8)
DAC
TCXO_MOD
VCO_MOD
IC404
XC6204B332D
33M
AVR
IC717
XC9235A15CM1
15M
DCDC
IC406
XC6204B332M
33A
AVR
L401 , D406 , D405
IC407 LT1616ES6-PBF
DCDC Converter
+B
SBC
D408
1SS301F
Q402 SSM6N16FE-F
/PSW
DCSW
SB1
Q408
EMD12
Q401 SSM6N16FE-F
/BINT
IC414
XC61CC5602NR
RESET
IC416
S-812C31BPI-G
AVR
SCTAM1
DCSW
Q413 2SA1955A-F
Q412 SSM3K15TE(F)
31BU
DCSW
CN401
Li Battery
Q409
2SA1955A-F
Q410
SSM3K15TE(F)
D412
1SS301F
SBC
Q403 2SJ648-A
Q404 SSM3K15TE(F)
SB2
DCSW
BATT
IC708 XC6204B502PR
5A
AVR
-10V
DCDC
IC403 LM2682MMX
50U
AVR
5UC
IC411
NJM2880U105ZB
CN403
+B
SB1
33A
VOL
Volume
ENC1
ENC2
ENC3
ENC4
Selector knob
CN23
6_KEYO2
6_KEYO1
6_KEYO0
6_KEYI0
6_KEYI1
KEY Matrix (6key)
6key Back Light
BL_SB
+B
Q406 2SB1132(Q,R)
Q407 UMG3N
AVR
Q405
SSM6N16FE-F
INAMT
EXAMT
IC413
TPA6201A1DRBR
IC412
TPA6201A1DRBR
CN405
EMC
MSW
SSW
PTT
PF
OPT
5V
TXD
RXD
NC
MSW
/UDET
/PTT
PFKEY

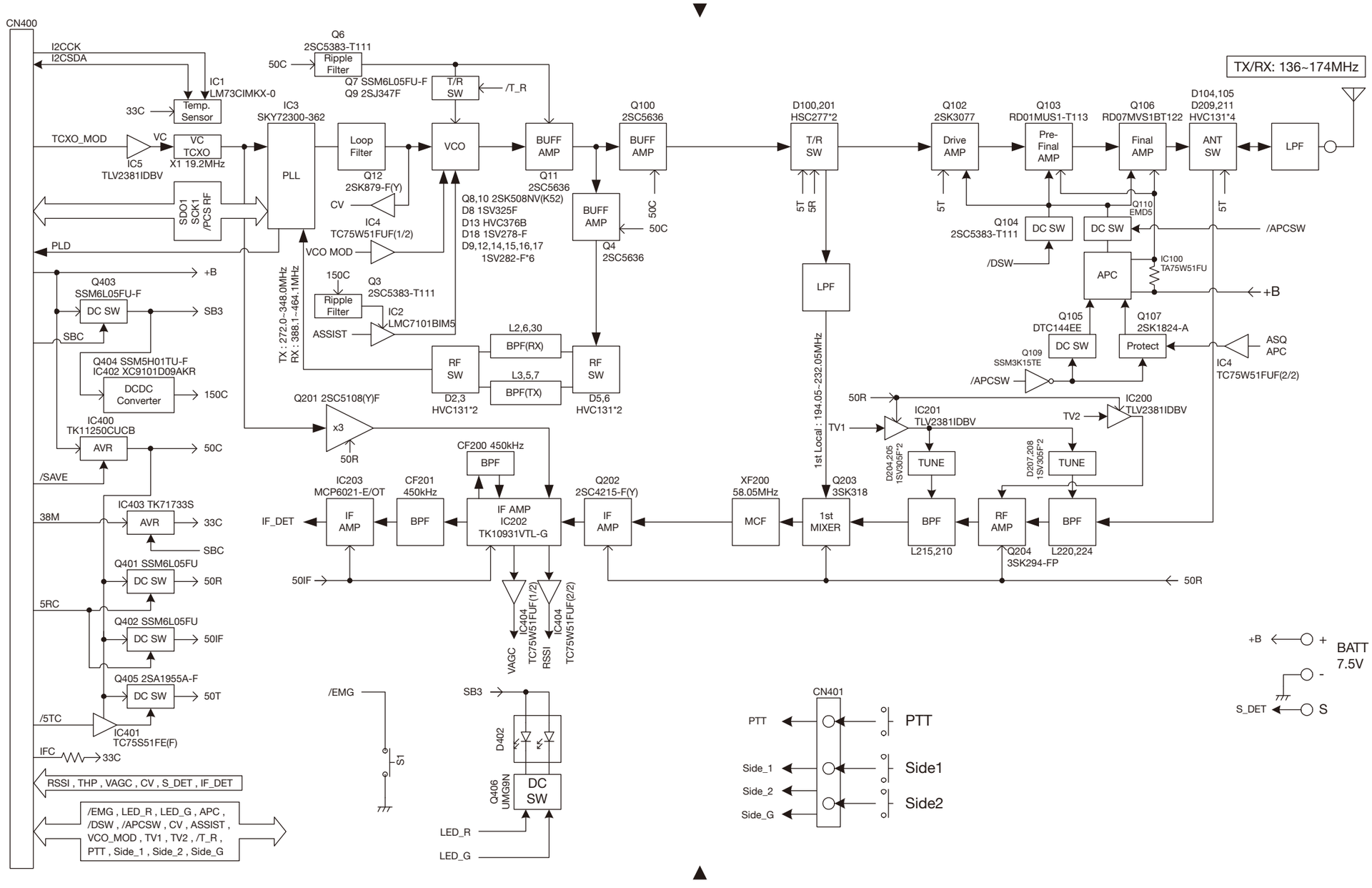
TX/RX: 136~174MHz
CN400
I2CCK
I2CSDA
IC1
LM73CIMKX-0
Temp. Sensor
33C
TCXO_MOD
VC
VC TCXO
X1 19.2MHz
IC5
TLV2381IDBV
SDO1
SCK1
/PCS RF
PLD
+B
Q403
SSM6L05FU-F
DC SW
SB3
SBC
Q404 SSM5H01TU-F
IC402 XC9101D09AKR
DCDC Converter
150C
IC400
TK11250CUCB
AVR
50C
/SAVE
38M
IC403 TK71733S
AVR
33C
SBC
Q401 SSM6L05FU
DC SW
50R
5RC
Q402 SSM6L05FU
DC SW
50IF
Q405 2SA1955A-F
DC SW
50T
/5TC
IC401
TC75S51FE(F)
IFC
33C
RSSI , THP , VAGC , CV , S_DET , IF_DET
/EMG , LED_R , LED_G , APC ,
/DSW , /APCSW , CV , ASSIST ,
VCO_MOD , TV1 , TV2 , /T_R ,
PTT , Side_1 , Side_2 , Side_G
Q6
2SC5383-T111
Ripple Filter
50C
Q7 SSM6L05FU-F
Q9 2SJ347F
T/R SW
/T_R
IC3
SKY72300-362
PLL
Loop Filter
Q12
2SK879-F(Y)
CV
IC4
TC75W51FUF(1/2)
VCO MOD
VCO
Q8,10 2SK508NV(K52)
D8 1SV325F
D13 HVC376B
D18 1SV278-F
D9,12,14,15,16,17
1SV282-F*6
BUFF AMP
Q11
2SC5636
BUFF AMP
50C
Q100
2SC5636
BUFF AMP
50C
Q4
2SC5636
150C
Q3
2SC5383-T111
Ripple Filter
IC2
LMC7101BIM5
ASSIST
TX : 272.0~348.0MHz
RX : 388.1~464.1MHz
L2,6,30
BPF(RX)
L3,5,7
BPF(TX)
RF SW
D2,3
HVC131*2
RF SW
D5,6
HVC131*2
Q201 2SC5108(Y)F
x3
50R
CF200 450kHz
BPF
IC203
MCP6021-E/OT
IF AMP
CF201
450kHz
BPF
IF AMP
IC202
TK10931VTL-G
Q202
2SC4215-F(Y)
IF AMP
IF_DET
50IF
VAGC
IC404
TC75W51FUF(1/2)
RSSI
IC404
TC75W51FUF(2/2)
XF200
58.05MHz
MCF
Q203
3SK318
1st MIXER
1st Local : 194.05~232.05MHz
D100,201
HSC277*2
T/R SW
5T
5R
LPF
Q102
2SK3077
Drive AMP
5T
Q103
RD01MUS1-T113
Pre-Final AMP
Q106
RD07MVS1BT122
Final AMP
D104,105
D209,211
HVC131*4
ANT SW
LPF
5T
Q104
2SC5383-T111
DC SW
/DSW
DC SW
Q110
EMD5
/APCSW
APC
IC100
TA75W51FU
+B
Q105
DTC144EE
DC SW
Q107
2SK1824-A
Protect
ASQ
APC
IC4
TC75W51FUF(2/2)
Q109
SSM3K15TE
/APCSW
50R
IC201
TLV2381IDBV
TV1
IC200
TLV2381IDBV
TV2
D204,205
1SV305F*2
TUNE
D207,208
1SV305F*2
TUNE
BPF
L215,210
RF AMP
Q204
3SK294-FP
BPF
L220,224
50R
/EMG
S1
SB3
D402
Q406
UMG9N
DC SW
LED_R
LED_G
CN401
PTT
Side_1
Side_2
Side_G
PTT
Side1
Side2
+B
+
BATT
7.5V
-
S_DET
S

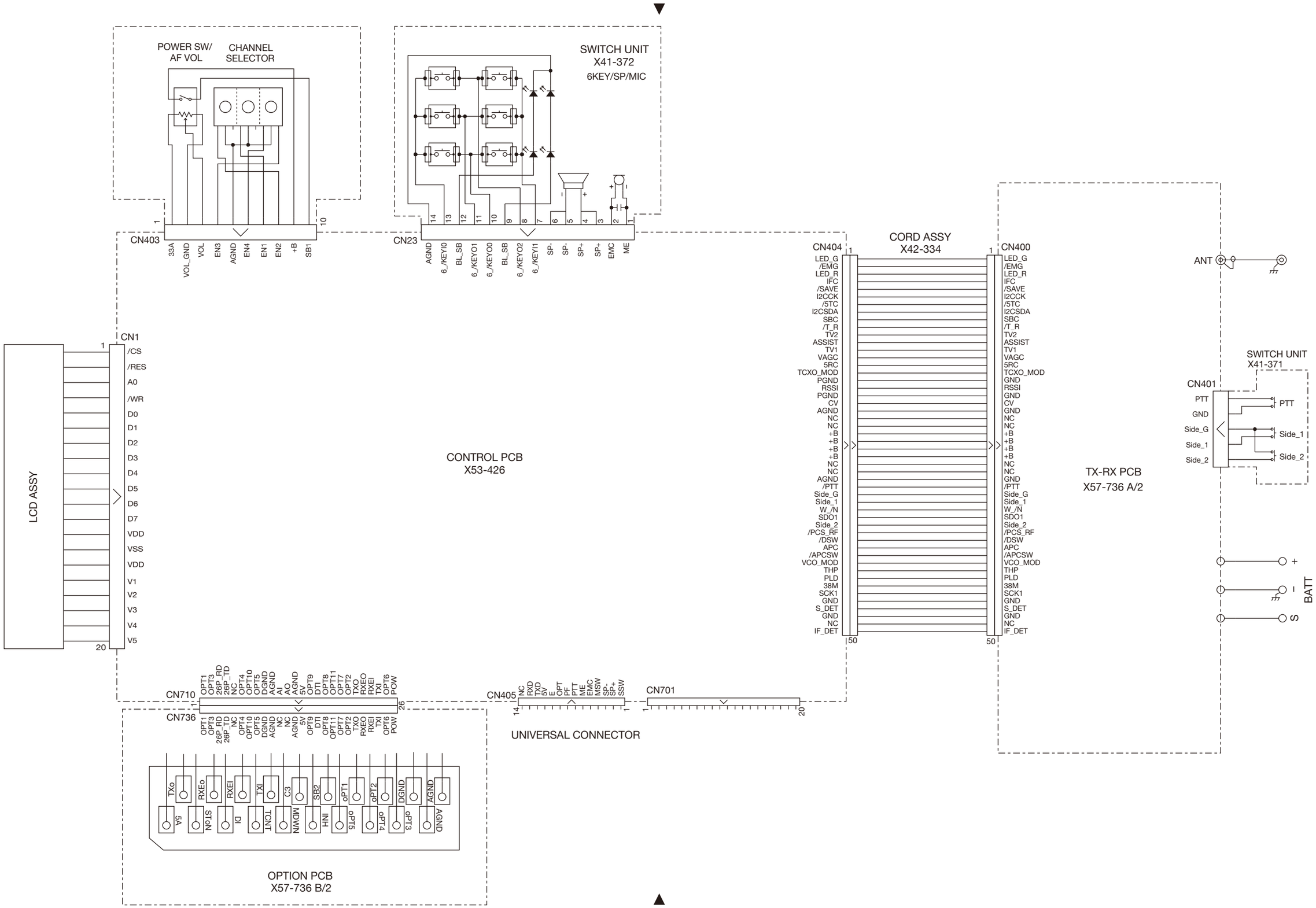
POWER SW/
AF VOL
CHANNEL
SELECTOR
SWITCH UNIT
X41-372
6KEY/SP/MIC
CN403
33A
VOL_GND
VOL
EN3
AGND
EN4
EN1
EN2
+B
SB1
CN23
AGND
6_/KEY10
BL_SB
6_/KEY01
6_/KEY00
BL_SB
6_/KEY02
6_/KEY11
SP-
SP-
SP+
SP+
EMC
ME
CN404
CORD ASSY
X42-334
CN400
LED_G
/EMG
LED_R
IFC
/SAVE
I2CCK
/5TC
I2CSDA
SBC
/T_R
TV2
ASSIST
TV1
VAGC
5RC
TCXO_MOD
PGND
RSSI
PGND
CV
AGND
NC
NC
+B
+B
+B
+B
NC
NC
AGND
/PTT
Side_G
Side_1
W_/N
SDO1
Side_2
/PCS_RF
/DSW
APC
/APCSW
VCO_MOD
THP
PLD
38M
SCK1
GND
S_DET
GND
NC
IF_DET
ANT
SWITCH UNIT
X41-371
CN401
PTT
GND
Side_G
Side_1
Side_2
PTT
Side_1
Side_2
TX-RX PCB
X57-736 A/2
BATT
CN1
/CS
/RES
A0
/WR
D0
D1
D2
D3
D4
D5
D6
D7
VDD
VSS
VDD
V1
V2
V3
V4
V5
LCD ASSY
CONTROL PCB
X53-426
CN710
CN736
OPT1
OPT3
26P_RD
26P_TD
NC
OPT4
OPT10
OPT5
DGND
AGND
A0
AGND
5V
OPT9
DTI
OPT8
OPT11
OPT7
OPT2
TXO
RXEO
RXEI
TXI
OPT6
POW
CN405
NC
RXD
TXD
5V
E
OPT
PF
PTT
ME
EMC
MSW
SP-
SP+
SSW
CN701
UNIVERSAL CONNECTOR
oXL
RXEo
RXEI
TXI
C3
SB2
oPT1
oPT2
DGND
AGND
5A
ST-ON
DI
TONT
MDWN
INH
oPT5
oPT4
oPT3
AGND
OPTION PCB
X57-736 B/2