VHF DIGITAL TRANSCEIVER

NX-720H(G)/720H

SERVICE MANUAL

REVISED

KENWOOD

JVCKENWOOD Corporation

© 2012-12 PRINTED IN JAPAN
B53-7032-10 (Y)

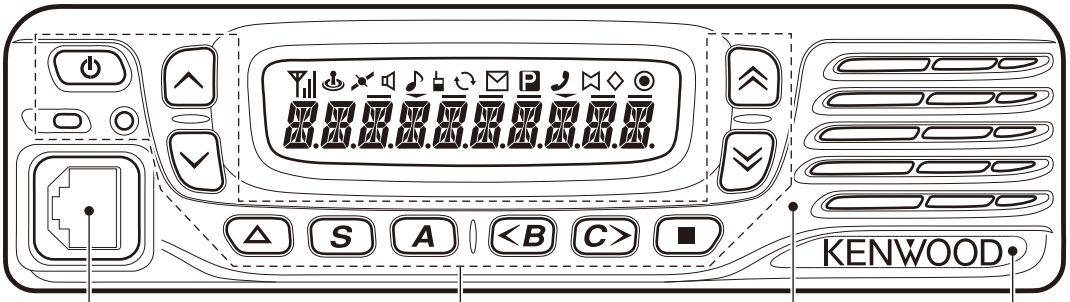

Modular jack (E58-0535-05)

Key top (K29-9479-01)

Panel assy (A62-1200-03)

Badge (B43-1675-04)

CONTENTS

GENERAL 2
SYSTEM SET-UP 4
REALIGNMENT 4
INSTALLATION 7
DISASSEMBLY FOR REPAIR 9
CIRCUIT DESCRIPTION 11
COMPONENTS DESCRIPTION 17
PARTS LIST 19
EXPLODED VIEW 29
PACKING 30
TROUBLE SHOOTING 31
ADJUSTMENT 35
TERMINAL FUNCTION 56
PC BOARD
DISPLAY UNIT (X54-3830-10) 60
TX-RX UNIT (X57-8230-1X) 62
INTERCONNECTION DIAGRAM 66
SCHEMATIC DIAGRAM 67
BLOCK DIAGRAM 78
LEVEL DIAGRAM 81
OPTIONAL ACCESSORIES
KRA-40 82
SPECIFICATIONS ..... BACK COVER

This product complies with the **RoHS** directive for the European market.

This product uses Lead Free solder.

Document Copyrights

Copyright 2012 by JVC KENWOOD Corporation. All rights reserved.

No part of this manual may be reproduced, translated, distributed, or transmitted in any form or by any means, electronic, mechanical, photocopying, recording, or otherwise, for any purpose without the prior written permission of JVC KENWOOD Corporation.

Disclaimer

While every precaution has been taken in the preparation of this manual, JVC KENWOOD Corporation assumes no responsibility for errors or omissions. Neither is any liability assumed for damages resulting from the use of the information contained herein. JVC KENWOOD Corporation reserves the right to make changes to any products herein at any time for improvement purposes.

Firmware Copyrights

The title to and ownership of copyrights for firmware embedded in KENWOOD product memories are reserved for JVC KENWOOD Corporation. Any modifying, reverse engineering, copy, reproducing or disclosing on an Internet website of the firmware is strictly prohibited without prior written consent of JVC KENWOOD Corporation. Furthermore, any reselling, assigning or transferring of the firmware is also strictly prohibited without embedding the firmware in KENWOOD product memories.

Transceivers containing AMBE+2™ Vocoder:

The AMBE+2™ voice coding technology is embedded in the firmware under the license of Digital Voice Systems, Inc.

GENERAL

INTRODUCTION

SCOPE OF THIS MANUAL

This manual is intended for use by experienced technicians familiar with similar types of commercial grade communications equipment. It contains all required service information for the equipment and is current as of the publication date. Changes which may occur after publication are covered by either Service Bulletins or Manual Revisions. These are issued as required.

ORDERING REPLACEMENT PARTS

When ordering replacement parts or equipment information, the full part identification number should be included. This applies to all parts : components, kits, or chassis. If the part number is not known, include the chassis or kit number of which it is a part, and a sufficient description of the required component for proper identification.

PERSONAL SAFETY

The following precautions are recommended for personal safety:

- DO NOT transmit if someone is within two feet (0.6 meter) of the antenna.
- DO NOT transmit until all RF connectors are secure and any open connectors are properly terminated.
- SHUT OFF this equipment when near electrical blasting caps or while in an explosive atmosphere.
- All equipment should be properly grounded before powerup for safe operation.
- This equipment should be serviced by only qualified technicians.

PRE-INSTALLATION CONSIDERATIONS

1. UNPACKING

Unpack the radio from its shipping container and check for accessory items. If any item is missing, please contact KENWOOD immediately.

2. PRE-INSTALLATION CHECKOUT

2-1. Introduction

Each radio is adjusted and tested before shipment. However, it is recommended that receiver and transmitter operation be checked for proper operation before installation.

2-2. Testing

The radio should be tested complete with all cabling and accessories as they will be connected in the final installation. Transmitter frequency, deviation, and power output should be checked, as should receiver sensitivity, squelch operation, and audio output. Signalling equipment operation should be verified.

3. PLANNING THE INSTALLATION

3-1. General

Inspect the vehicle and determine how and where the radio antenna and accessories will be mounted.

Plan cable runs for protection against pinching or crushing wiring, and radio installation to prevent overheating.

3-2. Antenna

The favored location for an antenna is in the center of a large, flat conductive area, usually at the roof center. The trunk lid is preferred, bond the trunk lid and vehicle chassis using ground straps to ensure the lid is at chassis ground.

GENERAL

3-3. Radio

The universal mount bracket allows the radio to be mounted in a variety of ways. Be sure the mounting surface is adequate to support the radio's weight. Allow sufficient space around the radio for air cooling. Position the radio close enough to the vehicle operator to permit easy access to the controls when driving.

3-4. DC Power and wiring

1. This radio may be installed in negative ground electrical systems only. Reverse polarity will cause the cable fuse to blow. Check the vehicle ground polarity before installation to prevent wasted time and effort.
2. Connect the positive power lead directly to the vehicle battery positive terminal. Connecting the Positive lead to any other positive voltage source in the vehicle is not recommended.
3. Connect the ground lead directly to the battery negative terminal.
4. The cable provided with the radio is sufficient to handle the maximum radio current demand. If the cable must be extended, be sure the additional wire is sufficient for the current to be carried and length of the added lead.

4. INSTALLATION PLANNING – CONTROL STATIONS

4-1. Antenna system

The antenna system selection depends on many factors and is beyond the scope of this manual. Your KENWOOD dealer can help you select an antenna system that will best serve your particular needs.

4-2. Radio location

Select a convenient location for your control station radio which is as close as practical to the antenna cable entry point. Secondly, use your system's power supply (which supplies the voltage and current required for your system). Make sure sufficient air can flow around the radio and power supply to allow adequate cooling.

SERVICE

This radio is designed for easy servicing. Refer to the schematic diagrams, printed circuit board views, and alignment procedures contained in this manual.

NOTE

If you do not intend to use the speaker 3.5-mm jack, the D-sub 15-pin connector and SMA connector, fit the supplied speaker-jack cap, ACC cap and SMA cap to stop dust and sand from getting in.

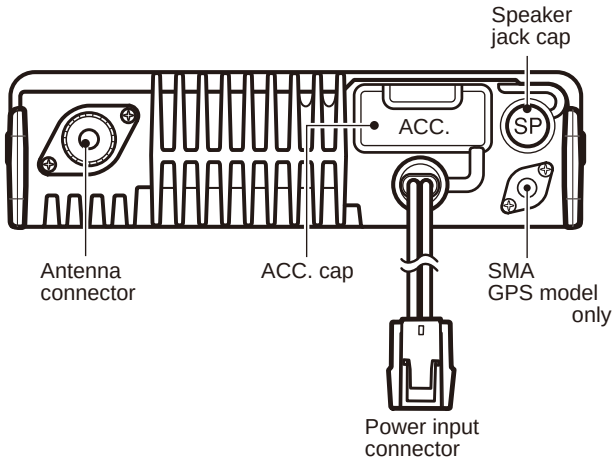

SYSTEM SET-UP

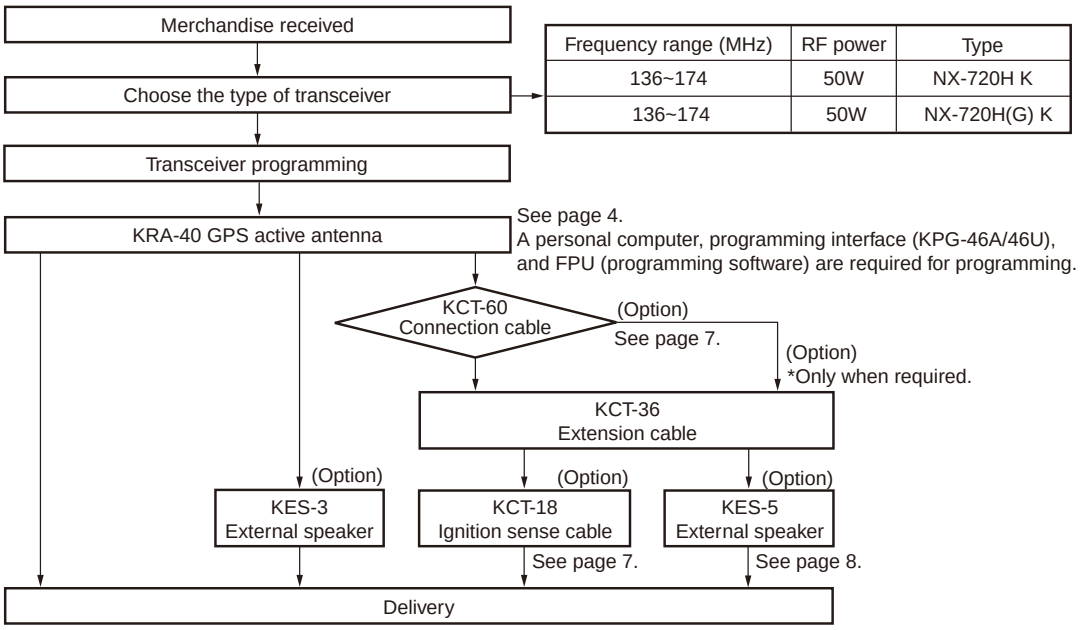

Frequency range (MHz)	RF power	Type
136~174	50W	NX-720H K
136~174	50W	NX-720H(G) K

REALIGNMENT

1. Modes

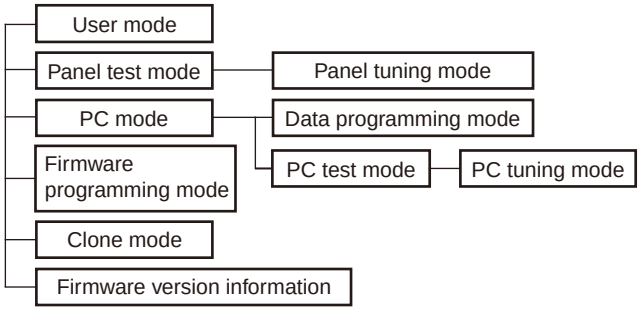

Mode	Function
User mode	For normal use.
Panel test mode	Use by the dealer to check the fundamental characteristics.
Panel tuning mode	Used by the dealer to tune the transceiver.
PC mode	Used for communication between the transceiver and PC.
Data programming mode	Used to read and write frequency data and other features to and from the transceiver.
PC test mode	Used to check the transceiver using the PC. This feature is included in the FPU.
PC tuning mode	Used to tune the transceiver using the PC.
Firmware programming mode	Used when changing the main program of the flash memory.
Clone mode	Used to transfer programming data from one transceiver to another.
Firmware version information	Used to confirm the internal firmware version.

2. How to Enter Each Mode

Mode	Operation
User mode	Power ON
Panel test mode	[*A*]+Power ON
Panel tuning mode	Panel test mode+[*S*]
PC mode	Received commands from PC
Firmware programming mode	[△]+Power ON
Clone mode	[<*B*]+Power ON (One second)
Firmware version information	[*S*]+Power ON

3. Panel Test Mode

Setting method refer to ADJUSTMENT.

4. Panel Tuning Mode

Setting method refer to ADJUSTMENT.

5. PC Mode

5-1. Preface

The transceiver is programmed using a personal computer, a programming interface (KPG-46A/46U) and FPU (programming software).

The programming software can be used with a PC. Figure 1 shows the setup of a PC for programming.

REALIGNMENT

5-2. Connection procedure

1. Connect the transceiver to the computer using the interface cable.

Note:

- You must install the KPG-46U driver in the computer to use the USB programming interface cable (KPG-46U).

2. When the Power is switched on, user mode can be entered immediately. When the PC sends a command, the transceiver enters PC mode, and “PROGRAM” is displayed on the LCD.
   When data is transmitting from the transceiver, the red LED blinks.
   When data is receiving by the transceiver, the green LED blinks.

Note:

The data stored in the computer must match the “Model Name” when it is written into the flash memory.

5-3. KPG-46A description (PC programming interface cable: Option)

The KPG-46A is required to interface the transceiver to the computer. It has a circuit in its D-sub connector (KPG-46A: 9-pin) case that converts the RS-232C logic level to the TTL level.

The KPG-46A connects the 8-pin microphone connector of the transceiver to the RS-232C serial port of the computer.

5-4. KPG-46U description (USB programming interface cable: Option)

The KPG-46U is a cable which connects to a USB port on a computer.

When using the KPG-46U, install the supplied CD-ROM (with driver software) in the computer. The KPG-46U driver runs under Windows XP, Vista or 7.

The latest version of the USB driver is available for download from the following URL:

http://www.kenwood.com/usb-com/

(This URL may change without notice.)

5-5. Programming Software : KPG-141D (ver.3.00 or later) description

The FPU is the programming software for the transceiver supplied on a CD-ROM. This software runs under Windows XP, Vista or 7 on a PC.

The data can be input to or read from the transceiver and edited on the screen. The programmed or edited data can be printed out. It is also possible to tune the transceiver.

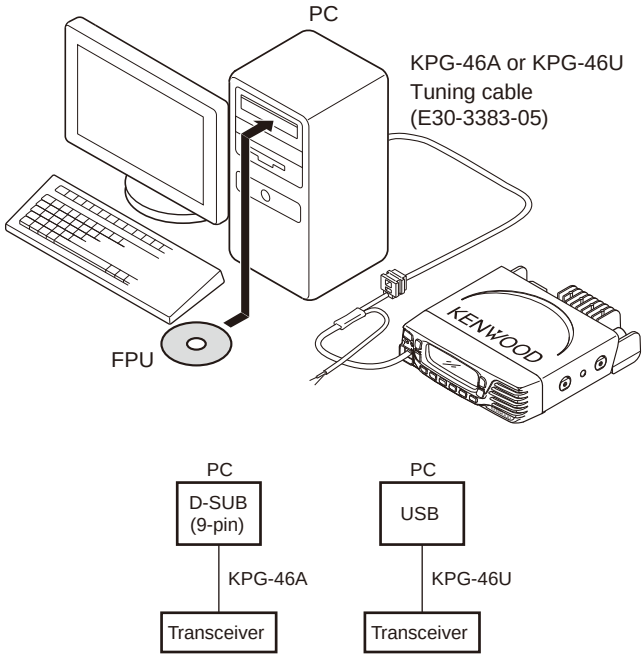

Fig. 1

6. Firmware Programming Mode

6-1. Preface

Flash memory is mounted on the transceiver. This allows the transceiver to be upgraded when new features are released in the future. (For details on how to obtain the firmware, contact Customer Service.)

6-2. Connection procedure

Connect the transceiver to the personal computer using the interface cable (KPG-46A/46U). (Connection is the same as in the PC Mode.)

6-3. Programming

1. Start up the firmware programming software (Fpro.exe (ver. 6.1 or later)). The Fpro.exe exists in the KPG-141D installed folder.
2. Set the communications speed (normally, 115200 bps) and communications port in the configuration item.
3. Set the firmware to be updated by File name item.
4. Press and hold the [△] key while turning the transceiver power ON. Then, the orange LED on the transceiver lights and “FIRM PRG” is displayed.
5. Check the connection between the transceiver and the personal computer, and make sure that the transceiver is in the Program mode.
6. Press “write” button in the window. When the transceiver starts to receive data, the "LOADING" display lights.
7. If writing ends successfully, the checksum is calculated and a result is displayed.
8. If you want to continue programming other transceivers, repeat steps 4 to 7.

6-4. Function

If you press the [△] key while “FIRM PRG” is displayed, the checksum is calculated, and a result is displayed.If you press the [△] key again while the checksum is displayed, “FIRM PRG” is redisplayed.

Note:

- This mode cannot be entered if the Firmware Programming mode is set to Disable in the Programming software.
- Normally, write in the high-speed mode.

7. Clone Mode

Programming data can be transferred from one transceiver to another by connecting them via their modular microphone jacks. The operation is as follows (the transmit transceiver is the source and the receive transceiver is a target). Clone mode should be enabled.

The following data cannot be cloned.

- Tuning data
- Embedded massage with password
- Model name data
- ESN (Electronic Serial Number) data

Note :

The following data can be cloned.

- Fleet (own)/ID (own) for FleetSync
- Unit ID (own) for NXDN
- ID (own) for MDC-1200

1. Turn the source transceiver power ON with the [<B] key held down (1 second), “CLONE MODE” is displayed on the LCD.
2. Power on the target transceiver.
3. Connect the cloning cable (No. E30-3382-05) to the modular microphone jacks on the source and target.
4. Press the [S] key on the source transceiver.
   The data of the source is sent to the target. While the source is sending data, red LED blinked. While the target is receiving the data, “PROGRAM” is displayed and green LED blinked. When cloning of data is completed, the source displays “END”, and the source red LED turned off, and the target automatically operates in the User mode. The target can then be operated by the same program as the source.
5. The other target can be continuously cloned. Carry out the operation in step 2 to 4.

7-1. How to enter the data password

If the read authorization password is set in the optional feature menu, you must enter the password (Source transceiver) to activate a clone mode.

You can use 0~9 to configure the password. The maximum length of the password is 6 digits.

1. [<B]+Power ON.
2. “CLONE LOCK” is displayed on the LCD.
3. If the [⌃] and [⌄] keys is pressed while “CLONE LOCK” is displayed, numbers (0 to 9) are displayed flashing. When you press the [S] key, the currently selected number is determined. If you press the [S] key after entering the password in this procedure, “CLONE MODE” is displayed if the entered password is correct. If the password is incorrect, “CLONE LOCK” is redisplayed.

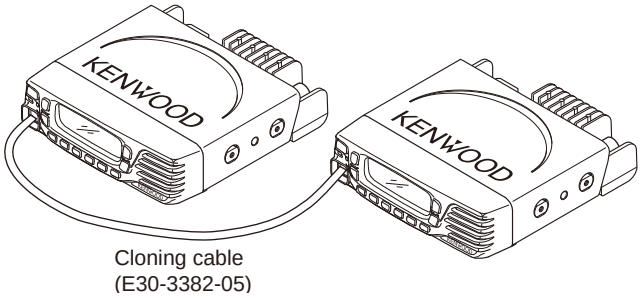

Fig. 2

7-2. Flow chart (Source transceiver)

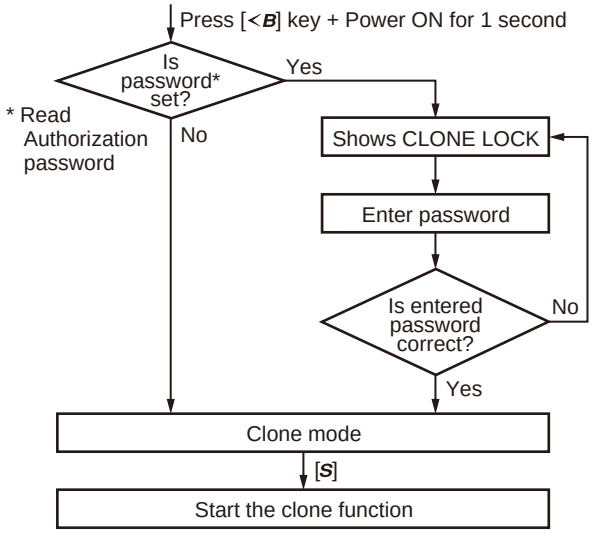

8. Firmware Version Information

Press and hold the [S] key while turning the transceiver power ON and then keep pressing and holding the [S] key, the firmware version information appears on the LCD.

INSTALLATION

1. Connection Cable (KCT-60: Option)

The KCT-60 connection cable kit is used to connect the transceiver to a Horn alert cable, KCT-18 (Ignition sense cable), KES-5 (External speaker), or through the KCT-36 extension cable.

1-1. Installing the KCT-60 (Connection cable) in the transceiver

1. Remove the ACC. cap on the rear of the transceiver.
2. Connect the D-sub connector of the KCT-60 to the D-sub 15-pin terminal of the transceiver.
3. Connect the 15-pin connector of the KCT-60 to a Horn alert cable, KCT-18, KES-5, or through a KCT-36 extension cable.

Note: You must setup using the KPG-141D.

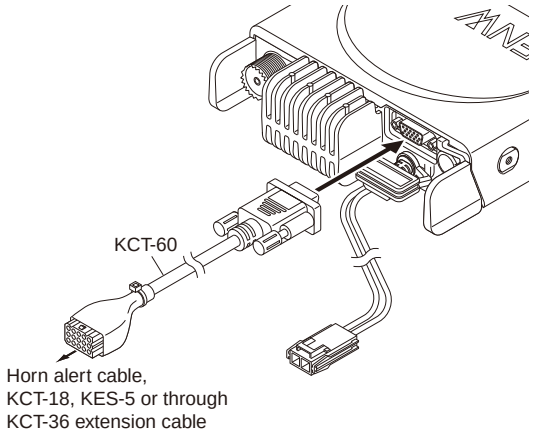

1-2. Terminal function

D-sub 15-pin Pin No.	Name	Molex 15-pin Pin No.
1	SB	1
2	IGN	2
3	PA or EXT-SP	12
4	DO	4
5	DI	5
6	FNC1	9
7	FNC2	11
8	FNC3	7
9	FNC4	6
10	FNC5	8
11	FNC6	10
12	5C	-
13	HR1	13
14	HR2	14
15	GND	3

2. Horn Alert Function

The Horn alert function (max. 2A drive) is enabled by installing the KCT-60 in the transceiver.

2-1. Installation Procedure

1. Remove the ACC. cap on the rear of the transceiver.
2. Connect the D-sub connector of the KCT-60 to the D-sub 15-pin terminal of the transceiver.
3. Insert the two crimp terminals of the Horn alert cable to pins 13 and 14 of the square plug.
4. Connect the square plug to the 15-pin connector of the KCT-60.
5. Connect the remaining two Horn alert cables to your car Horn alert signal control.
   The internal FET switch can be controlled by turning the HA function on/off and by using a signaling decode output. The maximum current of HA is 2A. This switch is the FET switch of P-channel type. Therefore, a DC power supply is necessary to use the HR1. The voltage range is from 5V to 16V.

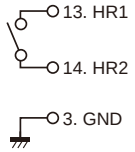

Note: You must set up using the KPG-141D.

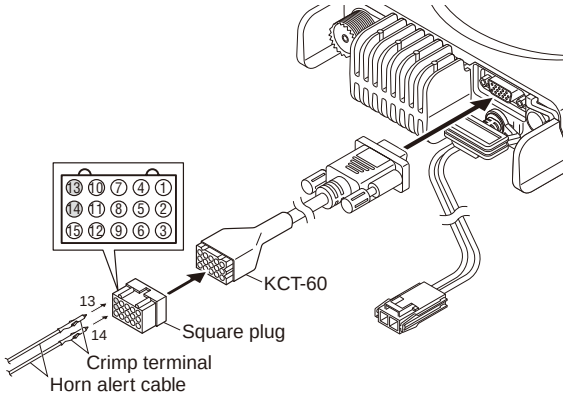

3. Ignition Sense Cable (KCT-18: Option)

The KCT-18 is an optional cable for enabling the ignition function. The ignition function lets you turn the transceiver power on and off with the car ignition key.

3-1. Installing the KCT-18 (Ignition sense cable) in the transceiver

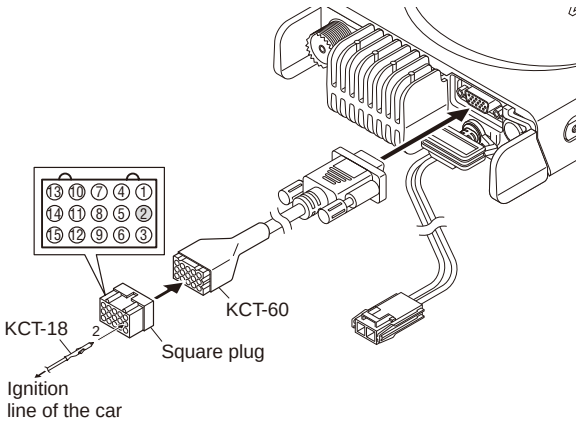

4. External Speaker (Option)

4-1. KES-5

External speaker KES-5 can be installed for KCT-60.

■ Connection procedure

1. Remove the ACC. cap on the rear of the transceiver.
2. Connect the D-sub connector of the KCT-60 to the D-sub 15-pin terminal of the transceiver.
3. Insert the two crimp terminals of the KES-5 to pins 3 and 12 of the square plug.
4. Connect the square plug to the 15-pin connector of the KCT-60.

Note:

You must set up using the KPG-141D.
Before the external speaker can be used, you must assign one of the keys as “External Speaker”, using the KPG-141D.

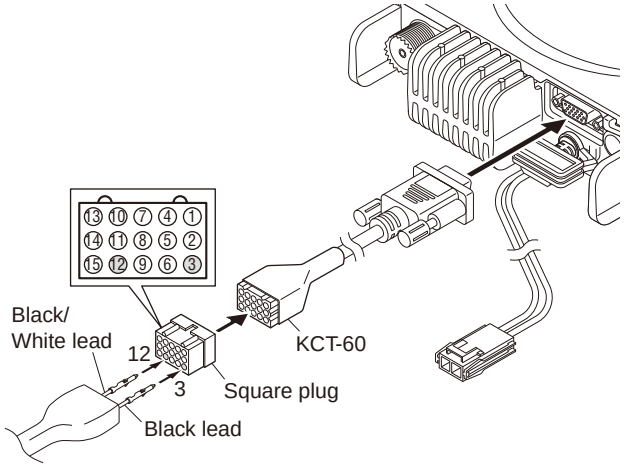

5. Changing Serial Port Level

5-1. Change FNC1 (TXD) and FNC2 (RXD) of D-SUB 15-pin connector from TTL level to RS-232C level

FNC1 (TXD /6pin) and FNC2 (RXD /7pin) of D-SUB 15-pin connector are configured at the TTL level as the default value. But you can change these serial port level to RS-232C level through the RS-232C level converter IC (IC516) by configuring the port.

Remove the R664, R635 and R662 chip jumpers and solder the chip jumpers to R666, R633 and R665.

5-2. Change FNC1 (TXD), FNC2 (RXD), FNC3 (RTS) and FNC4 (CTS) of D-SUB 15-pin connector from TTL level to RS-232C level

FNC1 (TXD /6pin), FNC2 (RXD /7pin), FNC3 (RTS /8pin) and FNC4 (CTS /9pin) of D-SUB 15-pin connector are configured at the TTL level as the default value. But you can change these serial port level to RS-232C level through the RS-232C level converter IC (IC516) by configuring the port.

Remove the R664, R635, R662, R659, R658 and R632 chip jumpers and solder the chip jumpers to R666, R633, R665, R663, R660 and R630.

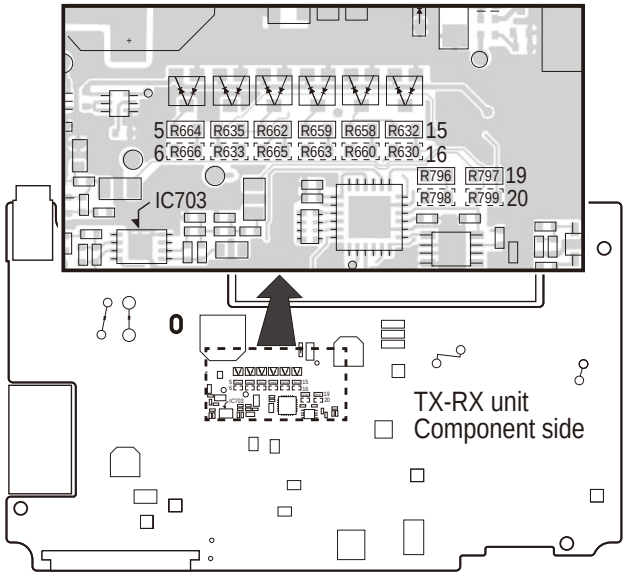

■ In the case of 5-1.

[TTL level]
R664,R635 and R662: 0Ω chip jumper.
R666, R633 and R665: open.
[RS-232C level]
R666, R633 and R665: 0Ω chip jumper.
R664, R635 and R662: open.

■ In the case of 5-2.

[TTL level]
R664, R635, R662, R659, R658 and R632: 0Ω chip jumper.
R666, R633, R665, R663, R660 and R630: open.
[RS-232C level]
R666, R633, R665, R663, R660 and R630: 0Ω chip jumper.
R664, R635, R662, R659, R658 and R632: open.

6. Changing of Signal Type

6-1.Change signal output of D-SUB connector from DEO to AFO

The output (4pin) of D-SUB 15-pin connector is configured at the DEO as the default value.

Remove the R796 chip jumper and solder the clip jumper to R798.

6-2.Change signal input of D-SUB connector from DI to MI2

The input (5pin) of D-SUB 15-pin connector is configured at the DI as the default value.

Remove the R797 chip jumper and solder the chip jumper to R799.

DISASSEMBLY FOR REPAIR

1. Disassembly Procedure

1. Remove the cabinet, top packing and shielding plate of the transceiver.

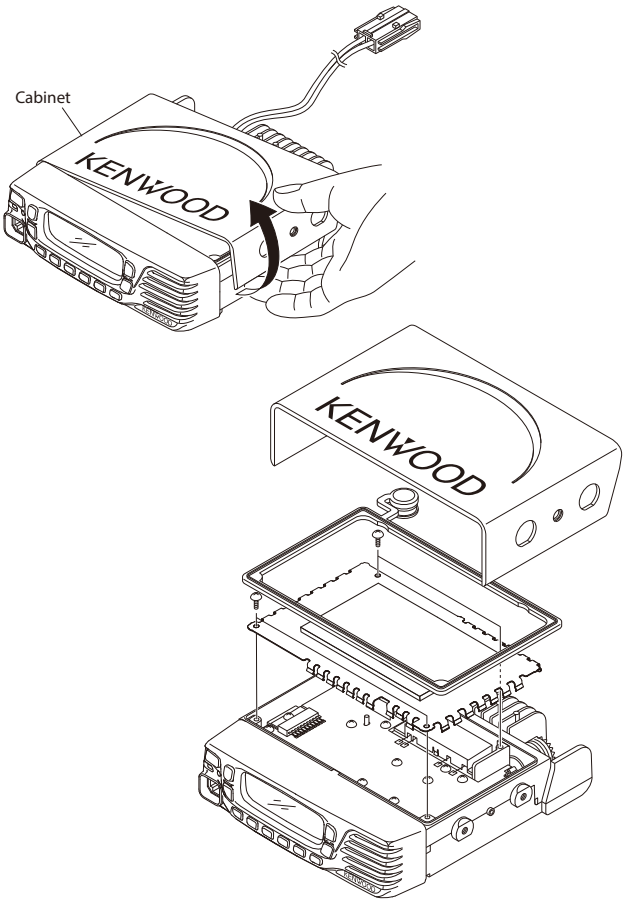

2. To remove the panel assembly, first turn the transceiver upside down.
   Then, insert a flat-head screwdriver into the holes of the chassis and tilt it in the direction as shown by the arrow.

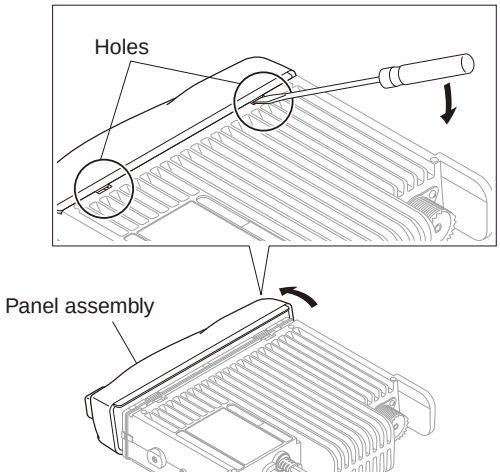

3. Disconnect the flat cable from connector of the panel assembly.

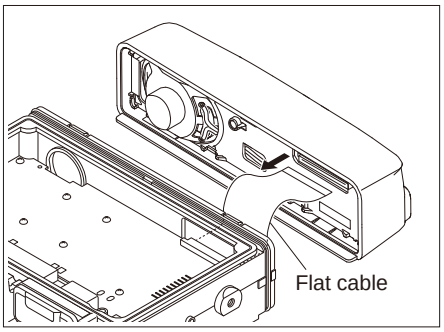

4. Hook the finger to hole and while pulling the speaker holder to this side, expand the panel side of ① to ③, and remove the speaker holder from the front panel.

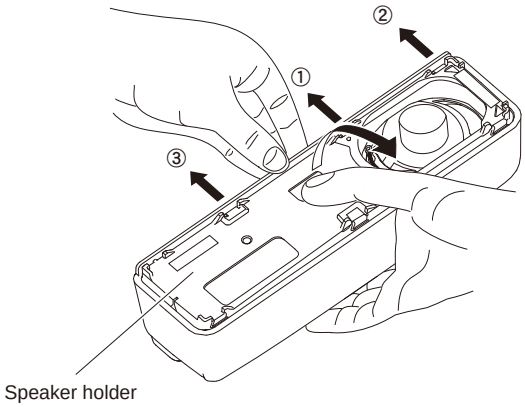

5. When removing the TX-RX PCB, first remove the top packing.
   Then, remove the solder of the antenna hot pin and positive terminal of the DC cord.
   Remove the 16 screws from the TX-RX PCB, power module, and audio amp.

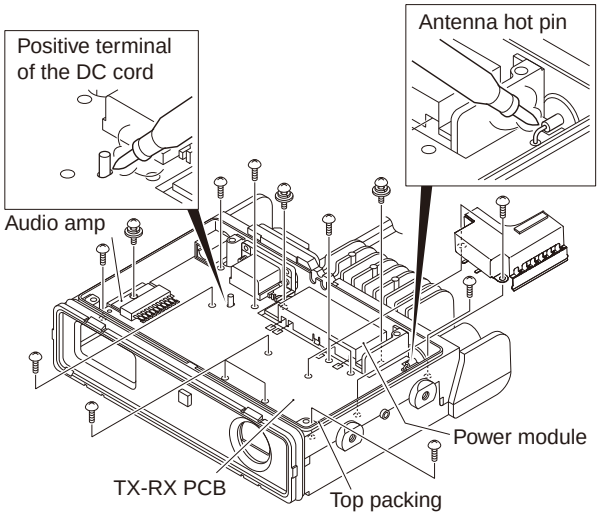

DISASSEMBLY FOR REPAIR

Note:

When you supply power to the TX-RX PCB after removing the TX-RX PCB from the chassis, solder the positive and ground terminals of the DC cord (Recommendation: E30-3448-25) to the + and GND terminals of the TX-RX PCB.

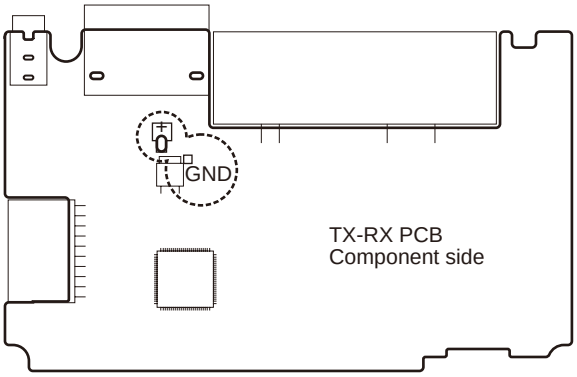

6. Pull it out behind the chassis by rotating the bush ③ of the DC cord 90 degrees in the direction of the arrow after the screw ① in the negative terminal is removed, and the positive terminal ② is removed from the chassis.

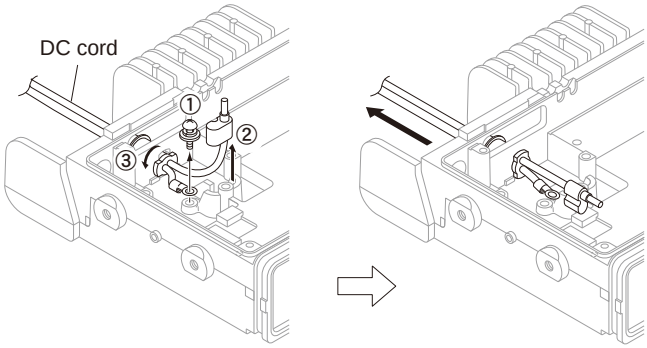

2. Precautions for Reassembly

1. The tab from ① to ③ is applied the front panel first. And, ④ to ⑥ tabs inside the front panel is pushed.

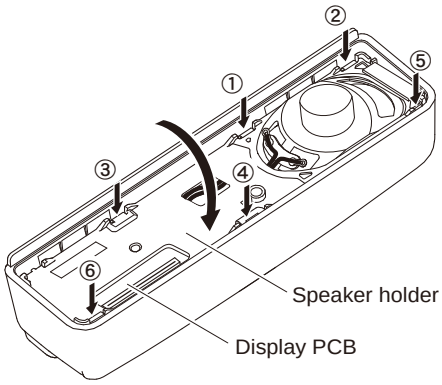

2. When mounting the panel assembly, pass the flat cable through the hole of the chassis as shown below then connect the flat cable to connector of the panel assembly.

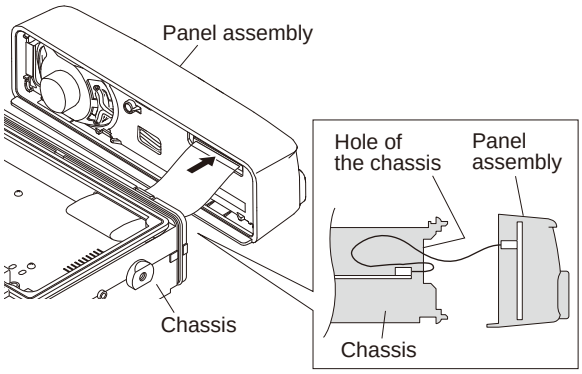

3. Fit the panel assembly into the two tabs of the chassis top side first.
   Then, fit the panel assembly into the two tabs of the chassis bottom side by turning the panel assembly.

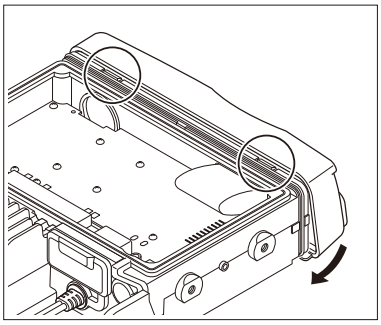

3. Correspondence when replacing the LED (D22 and D23)

When replacing the LED (D22 and D23), it makes it to length.

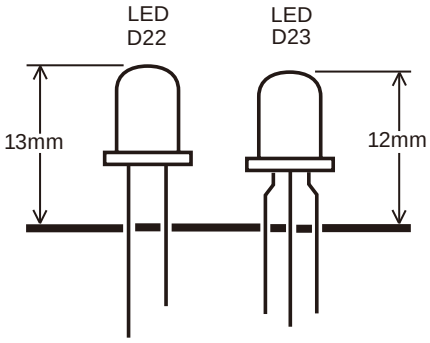

CIRCUIT DESCRIPTION

1. Overview

The NX-720 is a VHF Mobile transceiver designed to operate in the frequency range of 136 to 174MHz. The unit consists of a receiver, transmitter, phase-locked loop (PLL) frequency synthesizer, baseband parts, power supply, and control circuits.

2. Frequency Configuration

The receiver is a double-conversion super-heterodyne using a first intermediate frequency (IF) of 49.95MHz and a second IF of 450kHz. Incoming signals from the antenna are mixed with the local signal from the PLL circuit to produce the first IF of 49.95MHz. This is then mixed with the 50.4MHz second local oscillator output to produce the 450kHz second IF. The transmit signal frequency is generated by the PLL VCO, and modulated by the signal from the DSP. It is then amplified and fed to the antenna.

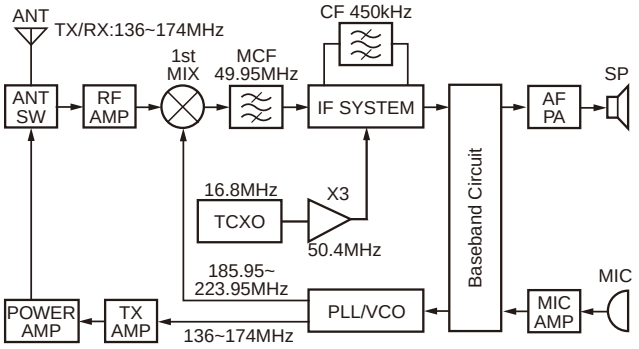

Fig.1 Frequency configuration

3. Receiver System

3-1. RF circuit

An incoming RF signal from the antenna terminal is passed through the antenna switch (D110, 111 and 107) and then the bandpass filter (L215, 216). The bandpass filter is adjusted by a variable capacitor. The input voltage to the variable capacitor is regulated by the voltage output from the D/A converter (IC712). The signal is amplified by an RF amplifier (Q202), and passed through the bandpass filter (L207, 209, 210 and 220). The resulting signal is applied to the first mixer (Q201) where it is mixed with the first local oscillator signal output from the frequency synthesizer to produce the first IF (49.95MHz).

3-2. IF circuit

The first IF signal is passed through a four-pole monolithic crystal filter (XF1) to reject the adjacent channel signal. The filtered first IF signal is amplified by the first IF amplifier (Q305) and then applied to the IF system IC (IC303). The IF system IC provides a second mixer, AGC amplifier , and RSSI (Received Signal Strength Indicator).

The second mixer mixes the first IF signal with the 50.4MHz of the second local oscillator output and produces the second IF signal of 450kHz.

The second IF signal is passed through the ceramic filter (CF1) to reject the adjacent channel signal. The filtered second IF signal is amplified by the AGC amplifier.

The signal from the AGC amplifier is input to an AD converter in ASIC (IC507) through the ceramic filter (CF2).

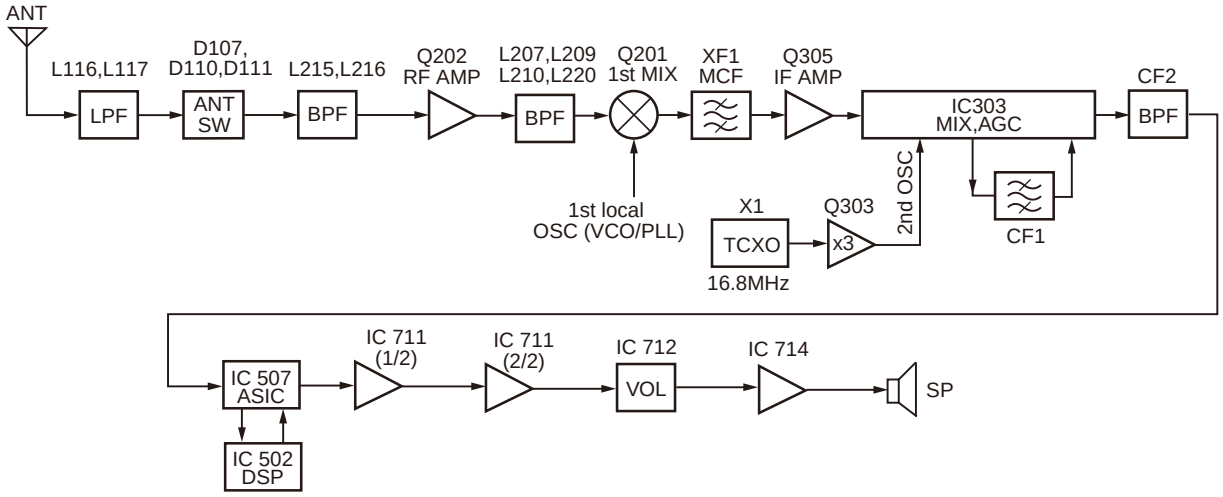

Fig.2 Receiver System

3-3. Audio amplifier circuit

Audio processing (high-pass filter, low-pass filter, de-emphasized and so on) in FM mode and decoding in NXDN mode are processed by the DSP (IC502). Audio signals from the ASIC (IC507), IC502 goes through the amplifier (IC711). The signal then goes through the D/A converter (IC712) and an amplifier (IC714).

3-4. Squelch Circuit

This circuit amplifies the demodulated noise signal from the ASIC (IC507) after filtering through a LPF and HPF circuit. The amplified signal is then converted to a DC signal by the detection circuit. The converted signal is fed back to IC507.

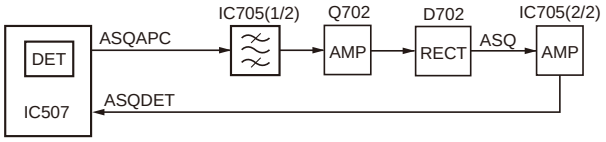

Fig. 3 Squelch Circuit

4. Transmitter System

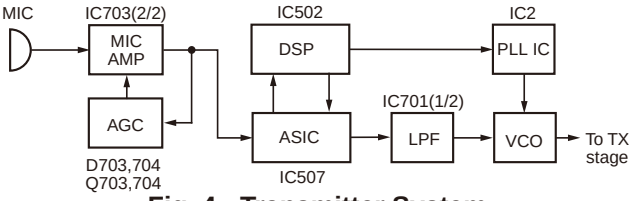

Fig. 4 Transmitter System

4-1. Audio Band Circuit

The signal from the microphone is amplified by IC703 (1/2) and limited by the AGC circuit composed of D703, D704, Q703 and Q704. IC703 (2/2) works as an anti-aliasing LPF filter.

4-2. Baseband Circuit

The audio signal output from the Audio band circuit is converted to digital data with a sampling frequency of 48 kHz. This digital data is sent to the DSP (IC502), and voice signals of 300Hz or lower and frequencies of 3kHz or higher are cut off so that an audio range 300Hz to 3kHz is extracted. The audio signal is then pre-emphasized in FM mode and synthesized with the signals, such as QT and DQT, as required, and is then output from the ASIC (IC507). In Digital mode, the audio signal is converted to the 4-Level FSK baseband signal and is output from IC507. The DTMF and MSK baseband signals are also generated by the DSP and output from IC507.

LPF (IC701) works as smoothing filter. The output level according to the transmit carrier is fine-adjusted according to each modulation method.

4-3. Drive and Final amplifier

The signal from the T/R switch (D17 is on) is amplified by the drive amplifier (Q102) to 16~17dBm. The output of the drive amplifier is amplified by the final amplifier module (IC102) to 50W (5.0W when the power is low). The output of the final amplifier module is then passed through the harmonic filter (LPF) and antenna switch (D110, D111 are on) and directional coupler and is applied to the antenna terminal.

4-4. APC circuit

The Automatic transmission power control (APC) circuit stabilizes the transmitter output power at a predetermined level by detecting the power module output with the directional COUPLER and diode detector (D104 and D105). The diode detector (D104 and D105) applies the detected voltage to the DC amplifier IC103 (2/2).

The APC circuit is configured to protect over-current of the power module due to fluctuations of the load at the antenna end and to stabilize transmission output at voltage and temperature variations.

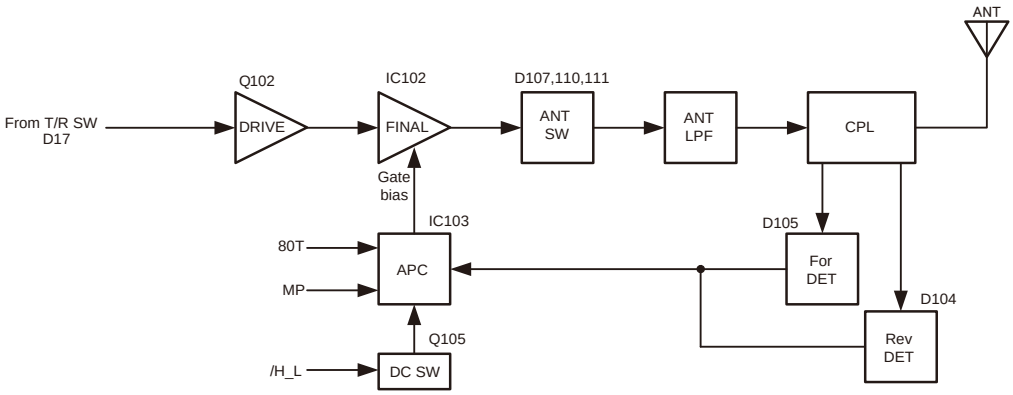

Fig. 5 APC Circuit

5. PLL Frequency Synthesizer

5-1. TCXO (X1)

The TCXO (X1) generates a reference frequency of 16.8MHz for the PLL frequency synthesizer. This reference frequency is applied to pin 9 of the PLL IC (IC2) and is connected to the IF circuit as a 2nd local signal through the Tripler.

The frequency adjustment is achieved by switching the ratio of the dividing frequency. The resolution of the adjusting frequency is approximately 4Hz.

5-2. VCO

There is an RX VCO and a TX VCO.

The TX VCO (Q7) generates a transmit carrier and the RX VCO (Q6) generates the 1st local signal. For the VCO oscillation frequency, the transmit carrier is 136 to 174 MHz and the 1st local signal is 185.95 to 223.95MHz.

The VCO oscillation frequency is determined by one system of operation switching terminal "T/R" and two systems of voltage control terminals "CV" and "ASSIST".

The operation switching terminal, "T/R", is controlled by the control line (/T_R) output from the ASIC (IC507). When the /T_R logic is low, the VCO outputs the transmit carrier and when it is high, it outputs the 1st local receive signal.

The voltage control terminals, "CV" and "ASSIST", are controlled by the PLL IC (IC2) and ASIC (IC507) and the output frequency changes continuously according to the applied voltage. For the modulation input terminal, "VCO_MOD", the output frequency changes according to the applied voltage. This is used to modulate the VCO output. "VCO_MOD" works only when "/T_R" is low.

5-3. PLL IC (IC2)

The PLL IC compares the differences in phases of the VCO oscillation frequency and the TCXO reference frequency, returns the difference to the VCO CV terminal and realizes the "Phase Locked Loop" for the return control. This allows the VCO oscillation frequency to accurately match (lock) the desired frequency.

When the frequency is controlled by the PLL , the frequency convergence time increases as the frequency difference increases when the set frequency is changed. To supplement this, the ASIC (IC507) is used before control by the PLL IC to bring the VCO oscillation frequency close to the desired frequency. As a result, the VCO CV voltage does not change and is always stable at approximately 2.5V.

The desired frequency is set for the PLL IC by the ASIC (IC507) through the 3-line "SDO1", "P_SCK1", "/PCS_RF" serial bus. Whether the PLL IC is locked or not is monitored by the ASIC through the “PLD” signal line. If the VCO is not the desired frequency (unlocked), the "PLD" logic is low.

The modulation signal of the Low-speed-Data is applied to pin 23 of the PLL IC (IC2).

The modulation signal that is digital data of a sampling frequency of 96 kHz is set for the PLL IC by the DSP (IC502) through the “PLL_MOD” line.

5-4. Local Switch (D16, D17)

The connection destination of the signal output from the buffer amplifier (Q11) is changed with the diode switch (D17) that is controlled by the transmission power supply, HSW, and the diode switch (D16) that is controlled by the reception power supply, 50R. If the HSW logic is high, it is connected to a transmit-side drive (Q102). If the HSW logic is low, it is connected to a receive-side mixer (Q202).

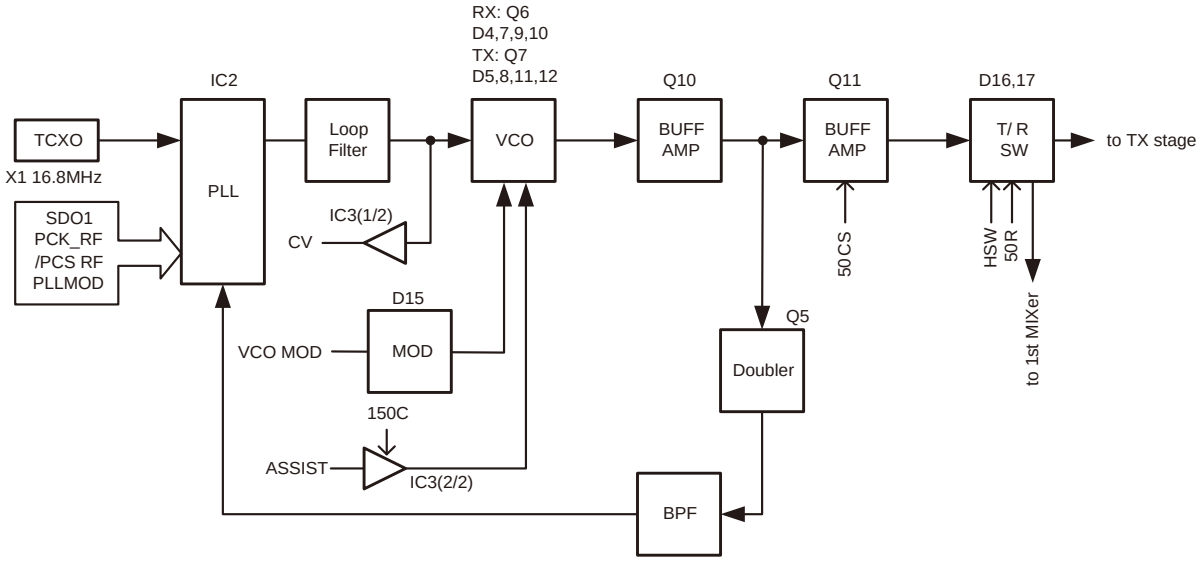

Fig. 6 PLL circuit

6. Control Circuit

The control circuit consists of the ASIC (IC507) and its peripheral circuits. IC507 mainly performs the following:

1) Switching between transmission and reception via the PTT signal input.
2) Reading system, zone, frequency, and program data from the memory circuit.
3) Sending frequency program data to the PLL.
4) Controlling the squelch on/off using the DC voltage from the squelch circuit.
5) Controlling the audio mute circuit using the decode data input.

6-1. ASIC

The ASIC (IC507) is a 32bit RISC processor, equipped with a peripheral function and ADC/DAC.

This ASIC operates at 18.432MHz clock and 3.3V /1.5V DC. It controls the flash memory, SRAM, DSP, the receive circuit, the transmitter circuit, the control circuit, and the display circuit and transfers data to or from an external device.

6-2. Memory Circuit

The memory circuit consists of the ASIC (IC507), the SRAM (IC503) and the flash memory (IC501). The flash memory has a capacity of 32Mbit which contains the transceiver control program for the ASIC and stores the data. It also stores the data for the transceiver channels and operating parameters that are written by the FPU. This program can be easily written from external devices. The SRAM has a capacity of 1Mbit which contains the work area and data area.

■ Flash memory

Note: The flash memory stores the data that is written by the FPU (KPG-141D), tuning data (Deviation, Squelch, etc.) and firmware program (User mode, Test mode, Tuning mode, etc.).

■ SRAM (static memory)

Note: The SRAM has a temporary data area and work area.

6-3. Display Unit

The display unit is composed of the LCD driver IC (IC1), the LCD & Key backlight, etc.

The LCD is controlled using the 4 serial lines (LCDDI,LCDCE,LCDCL,LCDDO) from the ASIC (IC507).

6-4. Key Detection Circuit

The keys are detected using an LCD driver IC (IC1). If a pressed key is detected by IC1, the information is passed to IC507 through the serial line.

6-5. DSP

The DSP circuit consists of a DSP (IC502) and processes the baseband signal. The DSP operates on an external clock of 18.432MHz (the same as the IC507), the I/O section operates at 3.3V and the core section operates at 1.5V. The DSP carries out the following processes:

- 4 level FSK processing
- Analog FM pre-emphasis/de-emphasis
- Vocoder processing between the audio codec and modulation/demodulation
- CAI processing, such as error correction encoding
- QT/DQT encoding/decoding
- DTMF encoding/decoding
- MSK encoding/decoding
- 2-tone encoding/decoding
- Compressor/expander processing
- Voice scrambler processing
- Transmit/receive audio filtering processing
- Microphone amplifier AGC processing
- Audio mute processing
- Modulation level processing

7. Power Supply Circuit

+B is connected to the Final amplifier and the DC/DC converter IC (IC405). IC405 regulates the +B voltage to 5.0V (50M). 50M operates whenever +B is supplied. IC401 (33M) and IC408 (15M) are enabled while the 50M is operating.

33M and 15M provide the power to the ASIC (IC507), DSP (IC502), and Flash memory. At this time the ASIC starts working. The voltage detector IC (IC402) watches the +B voltage. If the +B voltage is higher than 8.6V, IC402 (/BINT) outputs High. If the /BINT signal is high, Q403 (SB SW) is turned on by the SBC signal from the ASIC. (High : SBC=ON, Low : SBC=OFF). When the SB is turned on, IC1 (80C), IC404 (50C), Q402 (80ANT), Q404 (80T), Q415, 416 (150C), Q417 (50R) and Q408 (50CS) start working. IC409, Q409 and Q410 are controlled by the SBC signal. If the SBC signal becomes High, IC409 (33C) operates, and Q409 (33A_2) and Q410 (50MC SW) turn on.

The ASIC sets the TXC signal to High during transmission to the supply power (80T) for the transmission circuit. The ASIC sets the signals (RXC) to High during reception to the supply power (50R) for the reception circuit.

When the ASIC detects the PSW (Power switch) signal, IGN (Ignition sense) signal or /BINT signal, it sets the SBC signal to Low, and turns the transceiver power (SB) off. When D401 and Q401 detect an over-voltage condition, they turn Q403 (SB SW) off, but the ASIC continues to function.

CIRCUIT DESCRIPTION

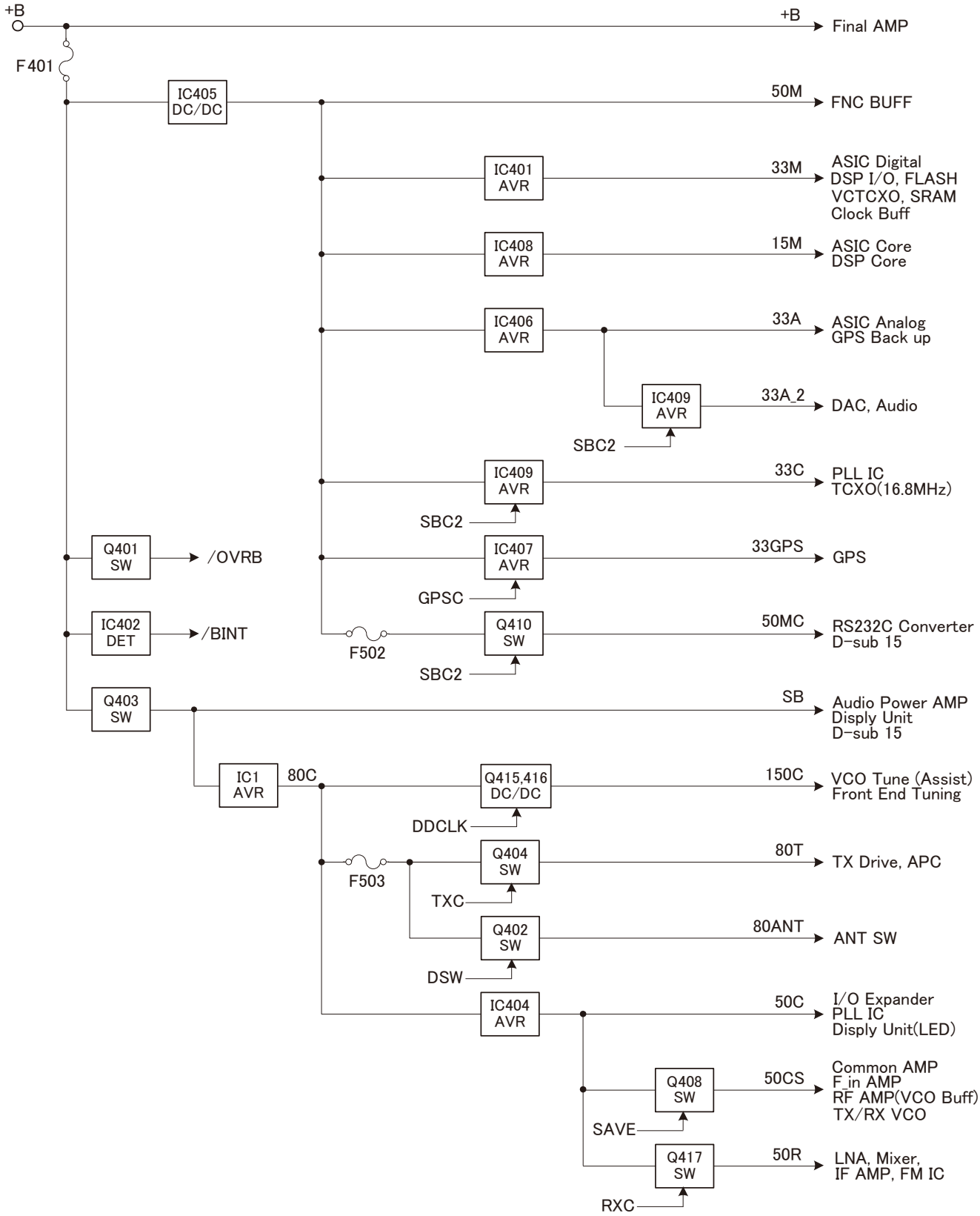

Fig. 7 Power supply circuit

8. Signaling Circuit

8-1. Encode (QT/DQT/DTMF/2-tone/MSK)

Each signaling data signal of the QT, DQT, DTMF, 2-tone and MSK is generated by the DSP circuit, superposed on a modulation signal and output from the ASIC (IC507). Each deviation of the TX QT, DQT, DTMF, 2-tone and MSK tones are adjusted by changing the output level of the DSP (IC502) and the resulting signal is routed to the VCO and PLL.

8-2. Decode (QT/DQT/DTMF/2-tone/MSK)

The audio signal is removed from the FM detection signal sent to the DSP circuit and the resulting signal is decoded by the DSP.

9. Compander Circuit

The term “compander” means compressor and expander. The compander reduces noise by utilizing a compressor and an expander. The DSP (IC502) performs this operation. The Compander can be turned on or off using the FPU.

10. GPS Circuit (GPS model only)

The GPS information function can be used by setting it through the FPU. The GPS signal of 1575.42MHz received with the GPS active antenna (with a built-in LNA) is processed by the GPS module (A801) and input to the ASIC (IC507) through the UART port. The ASIC (IC507) processes the GPS data (NMEA) and sends the resulting information to the LCD.

COMPONENTS DESCRIPTION

Display unit (X54-3830-10)

Ref. No.	Part Name	Description
IC1	IC	LCD driver
Q3	Transistor	TX/Busy LED switch
Q6	Transistor	TX/Busy LED switch
Q8	Transistor	LCD Backlight switch
Q9	Transistor	Backlight switch
Q10	Transistor	Status LED switch
Q11	Transistor	Backlight switch
D2	Diode	Line protection
D5-9	LED	Key backlight
D11-21	LED	LCD backlight
D22	LED	Status LED
D23	LED	TX/Busy LED
D24	LED	LCD backlight
D25	Varistor	Line protection
D26	Diode	Key control
D27	Zener diode	Over DC supply protection

TX-RX unit (X57-8230-1X)

Ref. No.	Part Name	Description
IC1	IC	AVR (80C)
IC2	IC	PLL system
IC3	IC	DC AMP (CV/Assist)
IC102	IC	TX power module
IC103	IC	OP AMP (APC)
IC201	IC	DC AMP (BPF)
IC301	IC	AND gate
IC303	IC	FM system
IC304	IC	DC AMP (RSSI)
IC401	IC	AVR (33M)
IC402	IC	Voltage detector (BINT)
IC404	IC	AVR (50C)
IC405	IC	DC/DC converter (50M)
IC406	IC	AVR (33A)
IC407	IC	AVR (33GPS)
IC408	IC	AVR (15M)
IC409	IC	AVR (33C)
IC501	IC	Flash memory
IC502	IC	DSP
IC503	IC	SRAM
IC504	IC	Reset
IC506	IC	Buffer AMP (Clock)
IC507	IC	ASIC
IC508	IC	AND gate
IC509	IC	Dual BUS buffer (HOOK/RXD/ MKEYI)
IC511	IC	BUS buffer
IC512	IC	Level shift
IC513	IC	Dual BUS buffer (FNC3/FNC1)
IC514	IC	Dual BUS buffer (FNC2/FNC4)
IC515	IC	I/O expander
IC516	IC	RS-232C driver
IC701	IC	VCO MOD/VREF
IC702	IC	LPF (APC/DMO)
IC703	IC	MIC SUM AMP/LPF (DI)
IC705	IC	BPF/Buffer AMP (SQ)
IC711	IC	RX SUM AMP/LPF (RX AF)
IC712	IC	D/A converter
IC713	IC	MIC/RX selector
IC714	IC	AF power AMP
IC716	IC	Dual BUS buffer (TXD1/MKEO)
IC801	IC	Dual BUS buffer (TXD2/RXD2)

COMPONENTS DESCRIPTION

Ref. No.	Part Name	Description
Q1	Transistor	DC switch (Assist)
Q2	FET	DC switch (Assist)
Q4	Transistor	Ripple filter
Q5	Transistor	Buffer AMP (PLL fin)
Q6	FET	RX VCO
Q7	FET	TX VCO
Q8,9	FET	T/R VCO switch
Q10,11	Transistor	Buffer AMP
Q102	Transistor	TX drive AMP
Q105	FET	DC switch (H/L power)
Q106	Transistor	DC switch (50C)
Q201	FET	RX 1st mixer
Q202	Transistor	LNA
Q303	Transistor	Tripler
Q305	Transistor	1st IF AMP
Q401	Transistor	DC switch (Over DC supply protection)
Q402	Transistor	DC switch (80ANT)
Q403	FET	DC switch (SB)
Q404	Transistor	DC switch (80T)
Q405	Transistor	DC switch (80ANT)
Q407	Transistor	DC switch (50MC)
Q408	Transistor	DC switch (50CS)
Q409	FET	DC switch (33A_2)
Q410	Transistor	DC switch (50MC)
Q411	Transistor	DC switch (80T)
Q412	Transistor	DC switch (80ANT)
Q414	Transistor	DC switch (150C)
Q415,416	Transistor	DC/DC converter
Q417	Transistor	DC switch (50R)
Q418	FET	DC switch (SB)
Q501	FET	DC switch (System)
Q502	Transistor	DC switch (Horn alert)
Q503	FET	DC switch (Horn alert)
Q504	Transistor	DC switch (IGN)
Q701	FET	SQL noise BW switch
Q702	Transistor	Noise AMP
Q703,704	Transistor	MIC AGC
Q705	FET	Mute (MI1)
Q706	FET	Mute (MI2)
Q708	Transistor	Pop noise prevention switch
Q709	FET	AF mute switch
D2	Zener diode	Over voltage protection

Ref. No.	Part Name	Description
D4	Variable capacitance diode	RX VCO frequency control
D5	Variable capacitance diode	TX VCO frequency control
D6	Variable capacitance diode	PLL f-in BPF tune
D7	Variable capacitance diode	RX VCO assist tune
D8	Variable capacitance diode	TX VCO assist tune
D9,10	Variable capacitance diode	RX VCO assist tune
D11	Variable capacitance diode	TX VCO assist tune
D13	Variable capacitance diode	PLL f-in BPF tune
D14	Diode	Speed up
D15	Variable capacitance diode	FM modulation
D16,17	Diode	T/R switch
D101	Zener diode	Over voltage protection
D102	Diode	Transient voltage limiter
D103	Diode	Reverse current prevention
D104,105	Diode	TX power detection
D106	Diode	Voltage limiter
D107	Diode	Antenna switch
D108,109	Diode	Over DC supply protection
D110,110	Diode	Antenna switch
D112-114	Diode	Over DC supply protection
D202-207	Variable capacitance diode	RX BPF tune
D401	Zener diode	Over DC supply protection
D403,404	Diode	Reverse current prevention
D405	Diode	Discharge
D406	Diode	DC/DC converter
D407	Diode	DC/DC converter (50M)
D408,409	Diode	DC/DC converter
D410	Surge absorption	Surge protection
D411	Diode	Reverse current prevention
D502	Diode	Reverse current prevention
D504	Diode	Reverse current prevention
D505-510	Diode	Line protection
D511-513	Diode	Reverse current prevention
D601	Diode	Line protection
D701	Diode	Reverse current prevention
D702	Diode	Noise detector
D703,704	Diode	AF detector
D705,706	Diode	Line protection
D801,802	Diode	Over DC supply protection

PARTS LIST

✻ New Parts. ⚠indicates safety critical components.
Parts without **Parts No.** are not supplied.
Les articles non mentionnes dans le **Parts No.** ne sont pas fournis.
Teile ohne **Parts No.** werden nicht geliefert.

L : Scandinavia **K** : USA **P** : Canada
Y : PX (Far East, Hawaii) **T** : England **E** : Europe
C : China **X** : Australia **M** : Other Areas

NX-720H(G) / 720H
DISPLAY UNIT (X54-3830-10)

NX-720H(G)/720H

Ref. No.	Address	New parts	Parts No.	Description	Destination
1	1B		A02-4073-21	PLASTIC CABINET	
2	2B	✻	A10-4161-01	CHASSIS	
3	3A	✻	A62-1200-03	PANEL ASSY	
5	2B		B09-0732-03	CAP(D-SUB)	
6	2B		B09-0754-05	CAP(SMA)	HG
7	3A		B43-1675-04	BADGE	
8	1C	✻	B62-2421-00	INSTRUCTION MANUAL(E/S/F)	
9	3B	✻	E29-1244-04	RELAY HARDWARE	
10	2B		E04-0167-15	RF COAXIAL RECEPTACLE(M)	
11	2B		E04-0492-05	RF COAXIAL RECEPTACLE(SMA)	HG
12	1C		E30-7523-55	DC CORD ASSY ACCESSORY	
13	1C		E30-7684-15	DC CORD	
14	2A		E37-1461-05	FLAT CABLE(30P)	
15	2B	✻	F10-3183-03	SHIELDING CASE(POWER MODULE)	
16	1B	✻	F10-3184-03	SHIELDING COVER(TOP)	
17	1B	✻	F10-3203-02	SHIELDING CASE(LPF)	
18	1C		F52-0024-05	FUSE(15A/BLADE) ACCESSORY	
19	1A		G11-4353-04	SHEET(SHIELDING/BOTTOM)	
20	2B		G11-4578-04	SHEET(FOR W/O SMA)	H
21	1B		G11-4611-04	SHEET(D-SUB)	
22	1B		G13-2102-04	CONDUCTIVE CUSHION	
23	3B		G13-2363-04	CUSHION(PANELHOLDER)	
24	1B		G13-2389-04	CUSHION(SHIELDING/TOP)	
25	2B		G13-2395-04	CUSHION(X57)	
26	2B		G53-1643-04	PACKING(DC CORD)	
27	2B		G53-1662-04	PACKING(M/ANT)	
28	2B		G53-1768-04	PACKING(SMA)	HG
31	1B		G53-1819-21	PACKING(CHASSIS)	
32	3A		G53-1820-03	PACKING(PANEL)	
33	3A		G53-1858-03	PACKING(SP)	
40	2D	✻	H12-4345-12	PACKING FIXTURE	
41	2D	✻	H12-4346-12	PACKING FIXTURE	
42	2D	✻	H52-2563-02	ITEM CARTON CASE	
43	3C		J19-1584-15	HOLDER(MIC) ACCESSORY	
46	3A		J19-5542-02	HOLDER(PANEL)	
47	1D		J29-0726-03	BRACKET ACCESSORY	
48	3A		K29-9479-01	KEY TOP	
A	2B		N30-2605-48	PAN HEAD MACHINE SCREW(SMA)	HG
B	2A,2B		N67-3008-48	PAN HEAD SEMS SCREW	
C	2A,2B		N87-2608-48	BRAZIER HEAD TAPTITE SCREW	
50	2C		N99-2039-05	SCREW SET ACCESSORY	
51	3A		T07-0785-15	SPEAKER	
52	2C		T91-0639-55	MICROPHONE(KMC-35)ACCESSORY	
			X57-8230-12	TX-RX UNIT(FOR SERVICE)	HG
			X57-8230-13	TX-RX UNIT(FOR SERVICE)	H

DISPLAY UNIT (X54-3830-10)

Ref. No.	Address	New parts	Parts No.	Description	Destination
101	2A		B11-1885-03	ILLUMINATION GUIDE	
102	2A		B38-0936-05	LCD	
D5 -9			B30-2337-05	LED(YELLOW)	
D11 -21			B30-2337-05	LED(YELLOW)	
D22	3A		B30-2321-05	LED(BLUE)	
D23	3A		B30-2151-05	LED(RED/GREEN)	
D24			B30-2337-05	LED(YELLOW)	
C1			CC73HCH1H101J	CHIP C 100PF J	
C2 ,3			CC73HCH1H221J	CHIP C 220PF J	
C4			CC73HCH1H101J	CHIP C 100PF J	
C5			CC73HCH1H221J	CHIP C 220PF J	
C6			CK73HB1H471K	CHIP C 470PF K	
C7			CK73HB1H102K	CHIP C 1000PF K	
C10			CK73HB1H102K	CHIP C 1000PF K	
C11			CC73HCH1H221J	CHIP C 220PF J	
C12			CC73HCH1H101J	CHIP C 100PF J	
C13			CK73HB1E103K	CHIP C 0.010UF K	
C14 ,15			CK73HB1H102K	CHIP C 1000PF K	
C21			CK73HB1E103K	CHIP C 0.010UF K	
C23			CK73HB1H102K	CHIP C 1000PF K	
C24 ,25			CK73HB1E103K	CHIP C 0.010UF K	
C27			CK73HB1A105K	CHIP C 1.0UF K	
C31			CK73HB1H102K	CHIP C 1000PF K	
C32 ,33			CK73HB1C473K	CHIP C 0.047UF K	
C34			CC73HCH1H470J	CHIP C 47PF J	
C35 ,36			CC73HCH1H221J	CHIP C 220PF J	
103	3A		E29-1231-15	INTER CONNECTOR	
CN1			E40-6924-05	FLAT CABLE CONNECTOR(30P)	
J1	3A		E58-0535-05	MODULAR JACK(MIC)	
104	2A		J21-8629-03	MOUNTING HARDWARE(LCD)	
L1			L92-0138-05	CHIP FERRITE	
L2 ,3			L92-0140-05	CHIP FERRITE	
CP1			RK74HB1J101J	CHIP-COM 100 J 1/16W	
R1			RK73HB1J101J	CHIP R 100 J 1/16W	
R2 -4			RK73HB1J103J	CHIP R 10K J 1/16W	
R5			RK73HB1J102J	CHIP R 1.0K J 1/16W	
R7			RK73HB1J000J	CHIP R 0 J 1/16W	
R9			RK73HB1J000J	CHIP R 0 J 1/16W	
R12			RK73HB1J101J	CHIP R 100 J 1/16W	
R14			RK73HB1J122J	CHIP R 1.2K J 1/16W	
R15			RK73HB1J000J	CHIP R 0 J 1/16W	
R17			RK73HB1J000J	CHIP R 0 J 1/16W	
R18			RK73GB2A331J	CHIP R 330 J 1/10W	
R19			RK73GB2A221J	CHIP R 220 J 1/10W	
R20			RK73HB1J000J	CHIP R 0 J 1/16W	
R22			RK73HB1J000J	CHIP R 0 J 1/16W	
R23			RK73HB1J473J	CHIP R 47K J 1/16W	
R24 ,25			RK73HB1J332J	CHIP R 3.3K J 1/16W	
R26			RK73HB1J472J	CHIP R 4.7K J 1/16W	
R28			RK73FB2B121J	CHIP R 120 J 1/8W	
R29			RK73FB2B221J	CHIP R 220 J 1/8W	
R34 -37			RK73GB2A271J	CHIP R 270 J 1/10W	

NX-720H(G)/720H

PARTS LIST

DISPLAY UNIT (X54-3830-10)
TX-RX UNIT (X57-8230-1X)

Ref. No.	Address	New parts	Parts No.	Description				Desti-nation
R38 -40			RK73HB1J472J	CHIP R	4.7K	J	1/16W	
R41			RK73HB1J101J	CHIP R	100	J	1/16W	
R42			RK73HB1J272J	CHIP R	2.7K	J	1/16W	
R43			RK73HB1J103J	CHIP R	10K	J	1/16W	
R44			RK73HB1J222J	CHIP R	2.2K	J	1/16W	
R45			RK73HB1J472J	CHIP R	4.7K	J	1/16W	
D1			DZ2J062(M)	ZENER DIODE				
D2			DA3S101F	DIODE				
D25			MINISMDC020F	VARISTOR				
D26			HN2S03FE	DIODE				
D27			DZ2J062(M)	ZENER DIODE				
IC1			LC75857W-E	MOS-IC				
Q3			KTC4075E(Y,GR)	TRANSISTOR				
Q6			KTC4075E(Y,GR)	TRANSISTOR				
Q8			KTC4075E(Y,GR)	TRANSISTOR				
Q9			QST7	TRANSISTOR				
Q10			LTC014EEBFS8	TRANSISTOR				
Q11			KTC4075E(Y,GR)	TRANSISTOR				
TX-RX UNIT (X57-8230-1X) -10: HG -11: H								
C1			CK73HB1E103K	CHIP C	0.010UF	K		
C2			CC73HCH1H101J	CHIP C	100PF	J		
C3 ,4			CK73HB1H103K	CHIP C	0.010UF	K		
C5 ,6			CC73HCH1H100B	CHIP C	10PF	B		
C7			CK73HB1H103K	CHIP C	0.010UF	K		
C9			CC73HCH1H100B	CHIP C	10PF	B		
C10 ,11			CK73HB1H103K	CHIP C	0.010UF	K		
C16 -21			CC73HCH1H101J	CHIP C	100PF	J		
C22			CK73HB1A104K	CHIP C	0.10UF	K		
C23			CC73HCH1H101J	CHIP C	100PF	J		
C24			CK73HB1A104K	CHIP C	0.10UF	K		
C25 ,26			CC73HCH1H101J	CHIP C	100PF	J		
C28			CC73HCH1H101J	CHIP C	100PF	J		
C29			CS77MA1VR15M	CHIP TNTL	0.15UF	35WV		
C30			CK73GB1E105K	CHIP C	1.0UF	K		
C31			CC73HCH1H101J	CHIP C	100PF	J		
C32			CS77BA1D100M	CHIP TNTL	10UF	20WV		
C33			CK73HB1H103K	CHIP C	0.010UF	K		
C34			C93-1906-05	CHIP FILM	0.047UF	J		
C35			CC73HCH1H060B	CHIP C	6.0PF	B		
C36			CC73HCH1H101J	CHIP C	100PF	J		
C37			CC73HCH1H080B	CHIP C	8.0PF	B		
C39			CC73HCH1H330J	CHIP C	33PF	J		
C40			CC73HCH1H080B	CHIP C	8.0PF	B		
C41 -44			CC73HCH1H101J	CHIP C	100PF	J		
C45			CC73HCH1H331J	CHIP C	330PF	J		
C46			CC73HCH1H100B	CHIP C	10PF	B		
C49			CC73HCH1H221J	CHIP C	220PF	J		
C50			CC73HCH1H070B	CHIP C	7.0PF	B		
C51			CK73HB1A105K	CHIP C	1.0UF	K		
C52			CK73HB1H471K	CHIP C	470PF	K		
C53			CC73HCH1H221J	CHIP C	220PF	J		
C54			CC73HCH1H181J	CHIP C	180PF	J		
C55			CC73HCH1H390G	CHIP C	39PF	G		
C56			CC73HCH1H080B	CHIP C	8.0PF	B		

Ref. No.	Address	New parts	Parts No.	Description				Desti-nation
C57			CC73HCH1H040B	CHIP C	4.0PF	B		
C58			CK73HB1H471K	CHIP C	470PF	K		
C59 ,60			CC73HCH1H040B	CHIP C	4.0PF	B		
C61			CK73HB1H471K	CHIP C	470PF	K		
C63			CC73HCH1HR75B	CHIP C	0.75PF	B		
C64			CK73FB1A106K	CHIP C	10UF	K		
C66			CC73HCH1H100B	CHIP C	10PF	B		
C67			CC73HCH1H060B	CHIP C	6.0PF	B		
C68			CC73HCH1H100B	CHIP C	10PF	B		
C69			CC73HCH1H080B	CHIP C	8.0PF	B		
C70			CK73GB1E105K	CHIP C	1.0UF	K		
C71			CC73HCH1H471J	CHIP C	470PF	J		
C73 ,74			CK73HB1H103K	CHIP C	0.010UF	K		
C76 ,77			CC73HCH1H0R5B	CHIP C	0.5PF	B		
C78 ,79			CK73HB1H102K	CHIP C	1000PF	K		
C80			CK73HB1H471K	CHIP C	470PF	K		
C81			CC73HCH1H220J	CHIP C	22PF	J		
C82			CK73HB1H102K	CHIP C	1000PF	K		
C83			CC73HCH1H050B	CHIP C	5.0PF	B		
C84			CC73HCH1H150J	CHIP C	15PF	J		
C85			CK73HB1H102K	CHIP C	1000PF	K		
C86			CK73HB1H471K	CHIP C	470PF	K		
C87			CK73HB1H102K	CHIP C	1000PF	K		
C88			CK73HB1A104K	CHIP C	0.10UF	K		
C89			CC73HCH1H150G	CHIP C	15PF	G		
C91			C93-0787-05	CHIP C	0.1UF	J		
C101			CK73HB1H102K	CHIP C	1000PF	K		
C102			CK73HB1H471K	CHIP C	470PF	K		
C103			CK73HB1H103K	CHIP C	0.010UF	K		
C104			CK73HB1H102K	CHIP C	1000PF	K		
C108			CK73FB1E475K	CHIP C	4.7UF	K		
C111			CK73HB1H471K	CHIP C	470PF	K		
C113			CK73HB1H471K	CHIP C	470PF	K		
C116-118			CK73HB1H471K	CHIP C	470PF	K		
C119			CC73HCH1H270J	CHIP C	27PF	J		
C120			CC73HCH1H220J	CHIP C	22PF	J		
C121			CC73HCH1H060B	CHIP C	6.0PF	B		
C123			CC73HCH1H220J	CHIP C	22PF	J		
C124			CC73HCH1H330J	CHIP C	33PF	J		
C125			CK73HB1H471K	CHIP C	470PF	K		
C127			CC73HCH1H220J	CHIP C	22PF	J		
C128			CC73HCH1H470J	CHIP C	47PF	J		
C129			CC73HCH1H330J	CHIP C	33PF	J		
C131			CC73HCH1H101J	CHIP C	100PF	J		
C133			CC73HCH1H221J	CHIP C	220PF	J		
C134,135			CK73HB1H471K	CHIP C	470PF	K		
C136			CK73FB1H471K	CHIP C	470PF	K		
C137			CC73HCH1H101J	CHIP C	100PF	J		
C140			CS77LA1C4R7M	CHIP TNTL	4.7UF	16WV		
C142			CC73HCH1H220J	CHIP C	22PF	J		
C144			CC73HCH1H470J	CHIP C	47PF	J		
C145			CK73HB1A104K	CHIP C	0.10UF	K		
C146			C93-0561-05	CHIP C	12PF	J		
C148			CC73HCH1H101J	CHIP C	100PF	J		
C149			CK73HB1H471K	CHIP C	470PF	K		
C151			C93-0563-05	CHIP C	18PF	J		
C152			C92-0875-05	ELECTRO	47UF	25WV		
C154			CK73HB1E223K	CHIP C	0.022UF	K		
C155			CK73HB1H471K	CHIP C	470PF	K		
C156			CC73HCH1H101J	CHIP C	100PF	J		

PARTS LIST

TX-RX UNIT (X57-8230-1X)

Ref. No.	Address	New parts	Parts No.	Description			Destination
C157			CK73HB1H102K	CHIP C	1000PF	K	
C158			CK73HB1H471K	CHIP C	470PF	K	
C161			CC73GCH1H040C	CHIP C	4.0PF	C	
C163			CC73GCH1H220J	CHIP C	22PF	J	
C165			CK73HB1H471K	CHIP C	470PF	K	
C167			CC73GCH1H150J	CHIP C	15PF	J	
C168			CK73HB1H471K	CHIP C	470PF	K	
C171			CC73HCH1H101J	CHIP C	100PF	J	
C172,173			CK73HB1H471K	CHIP C	470PF	K	
C175			CC73FCH1H390J	CHIP C	39PF	J	
C176			C93-0564-05	CHIP C	22PF	J	
C177,178			C93-1871-05	CHIP C	100PF	J	
C179			C93-0559-05	CHIP C	9.0PF	D	
C182			C93-1866-05	CHIP C	27PF	G	
C184			C93-0564-05	CHIP C	22PF	J	
C187,188			CK73HB1H102K	CHIP C	1000PF	K	
C191			CC73GCH1H151J	CHIP C	150PF	J	
C192			CC73GCH1H100C	CHIP C	10PF C		
C193			CC73GCH1H101J	CHIP C	100PF	J	
C194			CC73HCH1H050B	CHIP C	5.0PF	B	
C201			CK73HB1H103K	CHIP C	0.010UF	K	
C202			CK73HB1E103K	CHIP C	0.010UF	K	
C203			CK73HB1H471K	CHIP C	470PF	K	
C204			CK73FB1E475K	CHIP C	4.7UF	K	
C205			CK73HB1H471K	CHIP C	470PF	K	
C207			CK73HB1H102K	CHIP C	1000PF	K	
C208,209			CC73HCH1H120G	CHIP C	12PF	G	
C210			CK73HB1H103K	CHIP C	0.010UF	K	
C211			CC73HCH1H060B	CHIP C	6.0PF	B	
C212			CC73HCH1H220G	CHIP C	22PF	G	
C213			CC73HCH1H030B	CHIP C	3.0PF	B	
C214			CC73HCH1H150G	CHIP C	15PF	G	
C215,216			CK73HB1H102K	CHIP C	1000PF	K	
C217			CC73HCH1H040B	CHIP C	4.0PF	B	
C218			CC73HCH1H020B	CHIP C	2.0PF	B	
C223			CK73HB1H102K	CHIP C	1000PF	K	
C224			CC73HCH1H220G	CHIP C	22PF	G	
C225			CK73HB1H102K	CHIP C	1000PF	K	
C227			CK73HB1H102K	CHIP C	1000PF	K	
C229			CK73HB1H102K	CHIP C	1000PF	K	
C231			CC73GCH1H060B	CHIP C	6.0PF	B	
C232			CC73HCH1H220J	CHIP C	22PF	J	
C233			CC73GCH1H060B	CHIP C	6.0PF	B	
C234			CC73HCH1H390J	CHIP C	39PF	J	
C235			CC73HCH1H270G	CHIP C	27PF	G	
C239			CK73GB1H104K	CHIP C	0.10UF	K	
C240			CK73GB1E105K	CHIP C	1.0UF	K	
C246,247			CK73HB1H102K	CHIP C	1000PF	K	
C250			CK73HB1A104K	CHIP C	0.10UF	K	
C251			CC73HCH1H050B	CHIP C	5.0PF	B	
C253			CK73HB1H102K	CHIP C	1000PF	K	
C254			CC73HCH1H120G	CHIP C	12PF	G	
C255			CC73HCH1H470J	CHIP C	47PF	J	
C256			CC73HCH1H180G	CHIP C	18PF	G	
C257			CK73HB1H102K	CHIP C	1000PF	K	
C258			CC73HCH1H150G	CHIP C	15PF	G	
C259			CK73HB1H102K	CHIP C	1000PF	K	
C260			CC73HCH1H180G	CHIP C	18PF	G	
C261			CC73HCH1H560J	CHIP C	56PF	J	
C262			CK73HB1H102K	CHIP C	1000PF	K	

Ref. No.	Address	New parts	Parts No.	Description			Destination
C293			CK73HB1H471K	CHIP C	470PF	K	
C306			CK73HB1E103K	CHIP C	0.010UF	K	
C307			CK73HB1A104K	CHIP C	0.10UF	K	
C309			CC73HCH1H100B	CHIP C	10PF	B	
C312			CK73HB1H103K	CHIP C	0.010UF	K	
C313			CK73HB1A104K	CHIP C	0.10UF	K	
C315			CK73HB1E103K	CHIP C	0.010UF	K	
C316			CC73HCH1H100B	CHIP C	10PF	B	
C317			CC73HCH1H101J	CHIP C	100PF	J	
C322			CC73HCH1H101J	CHIP C	100PF	J	
C323			CC73HCH1H151J	CHIP C	150PF	J	
C324			CC73HCH1H330G	CHIP C	33PF	G	
C325			CC73HCH1H680G	CHIP C	68PF	G	
C326			CC73HCH1H100B	CHIP C	10PF	B	
C327			CK73HB1A104K	CHIP C	0.10UF	K	
C330			CK73HB1A104K	CHIP C	0.10UF	K	
C332-335			CK73HB1A104K	CHIP C	0.10UF	K	
C336			CK73FB1A106K	CHIP C	10UF	K	
C337			CK73HB1A104K	CHIP C	0.10UF	K	
C338			CK73FB1A106K	CHIP C	10UF	K	
C339			CK73HB1A104K	CHIP C	0.10UF	K	
C340			CK73HB1H103K	CHIP C	0.010UF	K	
C341			CK73HB1A104K	CHIP C	0.10UF	K	
C342			CK73HB1A105K	CHIP C	1.0UF	K	
C343-345			CK73HB1A104K	CHIP C	0.10UF	K	
C346			CK73HB1A105K	CHIP C	1.0UF	K	
C347			CK73HB1H103K	CHIP C	0.010UF	K	
C348			CC73HCH1H470J	CHIP C	47PF	J	
C350			CK73HB1H103K	CHIP C	0.010UF	K	
C351			CC73HCH1H101J	CHIP C	100PF	J	
C357			CC73HCH1H0R5B	CHIP C	0.5PF	B	
C358			CC73HCH1H100B	CHIP C	10PF	B	
C359-361			CK73HB1E103K	CHIP C	0.010UF	K	
C366			CK73HB1E103K	CHIP C	0.010UF	K	
C367			CK73HB1H103K	CHIP C	0.010UF	K	
C368			CK73HB1H471K	CHIP C	470PF	K	
C369			CK73HB1H103K	CHIP C	0.010UF	K	
C370			CC73HCH1H220G	CHIP C	22PF	G	
C371			CK73HB1H103K	CHIP C	0.010UF	K	
C401			C92-0968-05	ELECTRO	470UF	25WV	
C403			CK73HB1H471K	CHIP C	470PF	K	
C405			CK73HB1H103K	CHIP C	0.010UF	K	
C408,409			CK73HB1H103K	CHIP C	0.010UF	K	
C410			CK73GB1C225K	CHIP C	2.2UF	K	
C411			CK73GB1H104K	CHIP C	0.10UF	K	
C413			CC73HCH1H101J	CHIP C	100PF	J	
C416			CK73HB1H103K	CHIP C	0.010UF	K	
C417			CC73HCH1H101J	CHIP C	100PF	J	
C420			CK73GB1E105K	CHIP C	1.0UF	K	
C422			CK73HB1H102K	CHIP C	1000PF	K	
C423,424			CC73HCH1H101J	CHIP C	100PF	J	
C425			CK73HB1H103K	CHIP C	0.010UF	K	
C427			CK73GB1H473K	CHIP C	0.047UF	K	
C428			CK73HB1A104K	CHIP C	0.10UF	K	
C429			CK73HB1H471K	CHIP C	470PF	K	
C430			CK73FB1E475K	CHIP C	4.7UF	K	
C431			CC73HCH1H101J	CHIP C	100PF	J	
C432			CK73GB1H104K	CHIP C	0.10UF	K	
C433,434			CK73FB1E475K	CHIP C	4.7UF	K	
C435			CK73GB1C225K	CHIP C	2.2UF	K	

PARTS LIST

TX-RX UNIT (X57-8230-1X)

Ref. No.	Address	New parts	Parts No.	Description			Desti-nation
C436			CK73HB1H103K	CHIP C	0.010UF	K	
C437			CK73FB1E475K	CHIP C	4.7UF	K	
C438,439			CK73GB1H104K	CHIP C	0.10UF	K	
C440			C92-0875-05	ELECTRO	47UF	25WV	
C441			CK73GB1C225K	CHIP C	2.2UF	K	
C442			CK73HB1H103K	CHIP C	0.010UF	K	
C443			CK73GB1E105K	CHIP C	1.0UF	K	
C445,446			CK73HB1H103K	CHIP C	0.010UF	K	
C447			CK73GB1E105K	CHIP C	1.0UF	K	
C448			CK73HB1H103K	CHIP C	0.010UF	K	
C449			CK73GB1E105K	CHIP C	1.0UF	K	
C450,451			CK73FB1A106K	CHIP C	10UF	K	
C452			CS77LA1C4R7M	CHIP TNTL	4.7UF	16WV	
C453			CK73HB1H103K	CHIP C	0.010UF	K	
C454,455			CK73GB1C225K	CHIP C	2.2UF	K	
C456			CK73HB1H103K	CHIP C	0.010UF	K	
C457,458			CC73HCH1H101J	CHIP C	100PF	J	
C460			CC73HCH1H101J	CHIP C	100PF	J	
C461			CK73HB1A105K	CHIP C	1.0UF	K	
C462			CK73GB1E105K	CHIP C	1.0UF	K	
C463			CC73HCH1H101J	CHIP C	100PF	J	
C464			CK73HB1A105K	CHIP C	1.0UF	K	
C465,466			CK73GB1E105K	CHIP C	1.0UF	K	
C468			CK73HB1H103K	CHIP C	0.010UF	K	
C469			CK73HB1A105K	CHIP C	1.0UF	K	
C471			CC73HCH1H101J	CHIP C	100PF	J	
C472			CK73HB1H102K	CHIP C	1000PF	K	
C475			CK73GB1E105K	CHIP C	1.0UF	K	
C476			CK73HB1A104K	CHIP C	0.10UF	K	
C477			CK73GB1H104K	CHIP C	0.10UF	K	
C501-504			CK73HB1A104K	CHIP C	0.10UF	K	
C505-507			CK73GB0J106K	CHIP C	10UF	K	
C508,509			CK73HB1A105K	CHIP C	1.0UF	K	
C510			CK73HB1A104K	CHIP C	0.10UF	K	
C512			CK73HB1A104K	CHIP C	0.10UF	K	
C514-516			CK73HB1A104K	CHIP C	0.10UF	K	
C518-520			CK73HB1A104K	CHIP C	0.10UF	K	
C521			CC73HCH1H101J	CHIP C	100PF	J	
C522,523			CK73HB1A104K	CHIP C	0.10UF	K	
C524			CK73HB1A105K	CHIP C	1.0UF	K	
C525-531			CK73HB1A104K	CHIP C	0.10UF	K	
C532			CK73HB1H103K	CHIP C	0.010UF	K	
C533			CK73GB0J106K	CHIP C	10UF	K	
C534			CK73HB1A104K	CHIP C	0.10UF	K	
C535			CK73HB1H272K	CHIP C	2700PF	K	
C536			CK73HB1A104K	CHIP C	0.10UF	K	
C537			CK73HB1H102K	CHIP C	1000PF	K	
C541			CK73HB1A104K	CHIP C	0.10UF	K	
C542			CK73HB1H103K	CHIP C	0.010UF	K	
C543,544			CK73HB1A104K	CHIP C	0.10UF	K	
C545			CK73FB1A106K	CHIP C	10UF	K	
C546			CK73HB1H103K	CHIP C	0.010UF	K	
C547			CC73HCH1H101J	CHIP C	100PF	J	
C548			CK73HB1H103K	CHIP C	0.010UF	K	
C549			CK73HB1A104K	CHIP C	0.10UF	K	
C551			CK73HB1A104K	CHIP C	0.10UF	K	
C552			CK73HB1H103K	CHIP C	0.010UF	K	
C553			CK73HB1A105K	CHIP C	1.0UF	K	
C555,556			CK73HB1H103K	CHIP C	0.010UF	K	
C558			CK73HB1A104K	CHIP C	0.10UF	K	

Ref. No.	Address	New parts	Parts No.	Description			Desti-nation
C559			CK73FB1A106K	CHIP C	10UF	K	
C560			CC73HCH1H030B	CHIP C	3.0PF	B	
C563			CC73HCH1H101J	CHIP C	100PF	J	
C565-568			CK73HB1A104K	CHIP C	0.10UF	K	
C569			CK73HB1H103K	CHIP C	0.010UF	K	
C570			CK73HB1A105K	CHIP C	1.0UF	K	
C572-576			CK73HB1A104K	CHIP C	0.10UF	K	
C577			CK73HB1H103K	CHIP C	0.010UF	K	
C578			CK73HB1A105K	CHIP C	1.0UF	K	
C579-581			CK73HB1H103K	CHIP C	0.010UF	K	
C602			CK73HB1H103K	CHIP C	0.010UF	K	
C603			CC73HCH1H101J	CHIP C	100PF	J	
C604			CK73HB1H102K	CHIP C	1000PF	K	
C605			CC73HCH1H101J	CHIP C	100PF	J	
C607			CC73HCH1H101J	CHIP C	100PF	J	
C609-611			CC73HCH1H470J	CHIP C	47PF	J	
C612			CC73HCH1H101J	CHIP C	100PF	J	
C613			CK73HB1H103K	CHIP C	0.010UF	K	
C614-618			CC73HCH1H101J	CHIP C	100PF	J	
C620			CC73HCH1H101J	CHIP C	100PF	J	
C621			CK73HB1H102K	CHIP C	1000PF	K	
C622-624			CK73HB1H103K	CHIP C	0.010UF	K	
C625			CK73HB1A104K	CHIP C	0.10UF	K	
C626			CK73GB1H103K	CHIP C	0.010UF	K	
C627-630			CK73GB1E105K	CHIP C	1.0UF	K	
C632			CK73HB1H102K	CHIP C	1000PF	K	
C633-642			CC73HCH1H101J	CHIP C	100PF	J	
C643			CK73HB1E223K	CHIP C	0.022UF	K	
C644			CC73HCH1H101J	CHIP C	100PF	J	
C645			CK73GB1H103K	CHIP C	0.010UF	K	
C646			CC73HCH1H101J	CHIP C	100PF	J	
C647			CK73HB1H103K	CHIP C	0.010UF	K	
C648			CK73GB1H104K	CHIP C	0.10UF	K	
C650-652			CK73HB1A104K	CHIP C	0.10UF	K	
C660			CC73HCH1H101J	CHIP C	100PF	J	
C661			CC73HCH1H470J	CHIP C	47PF	J	
C680			CK73HB1A104K	CHIP C	0.10UF	K	
C701			CK73HB1H682K	CHIP C	6800PF	K	
C702			CK73HB1H102K	CHIP C	1000PF	K	
C704			CK73HB1A105K	CHIP C	1.0UF	K	
C705			CC73HCH1H470J	CHIP C	47PF	J	
C706			CK73HB1A104K	CHIP C	0.10UF	K	
C707			CK73HB1H681K	CHIP C	680PF	K	
C708			CK73HB1H102K	CHIP C	1000PF	K	
C709			CC73HCH1H270J	CHIP C	27PF	J	
C711			CC73HCH1H331J	CHIP C	330PF	J	
C712			CC73HCH1H181J	CHIP C	180PF	J	
C714			CC73HCH1H680J	CHIP C	68PF	J	
C716			CC73HCH1H101J	CHIP C	100PF	J	
C718			CK73HB1A104K	CHIP C	0.10UF	K	
C719			CC73HCH1H101J	CHIP C	100PF	J	
C720			CK73HB1A104K	CHIP C	0.10UF	K	
C722			CK73HB1A104K	CHIP C	0.10UF	K	
C723			CC73HCH1H470J	CHIP C	47PF	J	
C725			CC73HCH1H121J	CHIP C	120PF	J	
C728			CK73HB1H821K	CHIP C	820PF	K	
C729			CK73HB1H681K	CHIP C	680PF	K	
C732			CK73HB1H102K	CHIP C	1000PF	K	
C733			CK73FB1E475K	CHIP C	4.7UF	K	
C734			CK73HB1H472K	CHIP C	4700PF	K	

PARTS LIST

TX-RX UNIT (X57-8230-1X)

Ref. No.	Address	New parts	Parts No.	Description			Desti-nation
C735			CK73GB0J106K	CHIP C	10UF	K	
C738			CK73HB1A104K	CHIP C	0.10UF	K	
C739			CK73HB1A105K	CHIP C	1.0UF	K	
C740			CK73HB1H102K	CHIP C	1000PF	K	
C741			CK73HB1A224K	CHIP C	0.22UF	K	
C743			CC73HCH1H470J	CHIP C	47PF	J	
C744			CK73HB1A224K	CHIP C	0.22UF	K	
C746			CK73HB1A104K	CHIP C	0.10UF	K	
C747			CC73HCH1H221J	CHIP C	220PF	J	
C749			CK73HB1H102K	CHIP C	1000PF	K	
C752,753			CK73HB1A104K	CHIP C	0.10UF	K	
C758			CC73HCH1H101J	CHIP C	100PF	J	
C762			CK73HB1H103K	CHIP C	0.010UF	K	
C765			CC73HCH1H220J	CHIP C	22PF	J	
C766,767			CK73GB0J475K	CHIP C	4.7UF	K	
C769			CK73HB1E103K	CHIP C	0.010UF	K	
C770			CK73HB1A104K	CHIP C	0.10UF	K	
C771			CK73HB1H122K	CHIP C	1200PF	K	
C773			CK73HB1E103K	CHIP C	0.010UF	K	
C774			CK73HB1A104K	CHIP C	0.10UF	K	
C775			CC73HCH1H101J	CHIP C	100PF	J	
C776			CK73HB1A393K	CHIP C	0.039UF	K	
C777			CK73HB1A104K	CHIP C	0.10UF	K	
C778			CK73HB1A105K	CHIP C	1.0UF	K	
C779,780			CC73HCH1H101J	CHIP C	100PF	J	
C782			CK73HB1A104K	CHIP C	0.10UF	K	
C784			CK73FB1A106K	CHIP C	10UF	K	
C786			CK73HB1A104K	CHIP C	0.10UF	K	
C788			CK73FB1E475K	CHIP C	4.7UF	K	
C790,791			CK73FB1A106K	CHIP C	10UF	K	
C796			CK73GB1E105K	CHIP C	1.0UF	K	
C797,798			CK73GB1C224K	CHIP C	0.22UF	K	
C801			C92-0875-05	ELECTRO	47UF	25WV	
C802			CK73HB1H102K	CHIP C	1000PF	K	
C803,804			C92-0906-05	ELECTRO	330UF	16WV	
C805			CK73HB1H102K	CHIP C	1000PF	K	
C806			CK73GB1E105K	CHIP C	1.0UF	K	
C807			CK73HB1C473K	CHIP C	0.047UF	K	
C808			CK73HB1A683K	CHIP C	0.068UF	K	
C809			CK73HB1H102K	CHIP C	1000PF	K	HG
C810			CK73FB1E475K	CHIP C	4.7UF	K	
C811			CK73HB1H102K	CHIP C	1000PF	K	
C812			CK73FB1A106K	CHIP C	10UF	K	
C813			CK73GB0J106K	CHIP C	10UF	K	H
C813,814			CK73GB0J106K	CHIP C	10UF	K	HG
C815			CK73HB1A104K	CHIP C	0.10UF	K	HG
C816			CK73HB1H102K	CHIP C	1000PF	K	HG
C820			CK73HB1A104K	CHIP C	0.10UF	K	HG
C821,822			CC73HCH1H180J	CHIP C	18PF	J	HG
C823			CK73HB1H102K	CHIP C	1000PF	K	HG
C824,825			CC73HCH1H180J	CHIP C	18PF	J	HG
C826			CK73HB1A104K	CHIP C	0.10UF	K	HG
C829			CK73GB0J106K	CHIP C	10UF	K	
C830,831			CK73HB1A104K	CHIP C	0.10UF	K	
C832,833			CK73HB1H102K	CHIP C	1000PF	K	
CN10-15			E23-1278-05	TERMINAL			
CN203-206			E23-1278-05	TERMINAL			
CN514			E40-6847-05	FLAT CABLE CONNECTOR			
CN801			E04-0410-05	PIN SOCKET(3P) HG			HG
J501	2B		E58-0536-05	D-SUB SOCKET(15P)			

Ref. No.	Address	New parts	Parts No.	Description	Desti-nation
J701	2B		E11-0425-05	3.5D PHONE JACK(EXT-SP)	
F401			F53-0328-15	FUSE(5A)	
F501			F53-0324-15	FUSE(2.5A)	
F502			F53-0315-15	FUSE(250MA)	
F503			F53-0316-15	FUSE(375MA)	
F701			F53-0324-15	FUSE(2.5A)	
CF1			L72-1017-05	CERAMIC FILTER(450KHZ)	
CF2			L72-1040-05	CERAMIC FILTER(450KHZ)	
L1			L92-0163-05	BEADS CORE	
L2			L41-4795-39	SMALL FIXED INDUCTOR(4.7UH)	
L3			L92-0163-05	BEADS CORE	
L4			L40-1075-71	SMALL FIXED INDUCTOR(10NH)	
L5			L92-0163-05	BEADS CORE	
L6 ,7			L40-1001-86	SMALL FIXED INDUCTOR(10UH)	
L10			L40-5663-71	SMALL FIXED INDUCTOR(5.6NH)	
L11			L40-2285-92	SMALL FIXED INDUCTOR(220NH)	
L12			L40-3391-86	SMALL FIXED INDUCTOR(3.3UH)	
L13			L40-2285-92	SMALL FIXED INDUCTOR(220NH)	
L14			L40-3391-86	SMALL FIXED INDUCTOR(3.3UH)	
L15 ,16			L40-1885-92	SMALL FIXED INDUCTOR(180NH)	
L17			L40-6865-71	SMALL FIXED INDUCTOR(6.8NH)	
L18			L34-4611-15	AIR-CORE COIL(10T)	
L19			L92-0163-05	BEADS CORE	
L20			L34-4609-15	AIR-CORE COIL(8T)	
L21			L40-4775-92	SMALL FIXED INDUCTOR(47NH)	
L22			L92-0446-05	BEADS CORE	
L23 ,24			L40-3391-86	SMALL FIXED INDUCTOR(3.3UH)	
L25			L40-1285-71	SMALL FIXED INDUCTOR(120NH)	
L26			L92-0163-05	BEADS CORE	
L27			L40-1085-92	SMALL FIXED INDUCTOR(100NH)	
L102			L40-6875-92	SMALL FIXED INDUCTOR(68NH)	
L103			L92-0140-05	CHIP FERRITE	
L104			L40-3375-92	SMALL FIXED INDUCTOR(33NH)	
L105			L92-0163-05	BEADS CORE	
L106			L40-3975-92	SMALL FIXED INDUCTOR(39NH)	
L107			L92-0140-05	CHIP FERRITE	
L108-110			L92-0179-05	CHIP FERRITE	
L111			L92-0163-05	BEADS CORE	
L112			L34-4478-15	AIR-CORE COIL(9.5T)	
L113			L34-4909-05	AIR-CORE COIL(5T)	
L114			L34-4478-15	AIR-CORE COIL(9.5T)	
L115			L34-4670-05	AIR-CORE COIL(5T)	
L116			L34-4481-15	AIR-CORE COIL(6T)	
L117			L34-4736-05	AIR-CORE COIL(5T)	
L118			L40-6875-92	SMALL FIXED INDUCTOR(68NH)	
L130			L40-5675-71	SMALL FIXED INDUCTOR(56NH)	
L201			L92-0138-05	CHIP FERRITE	
L202			L41-5685-39	SMALL FIXED INDUCTOR(0.56UH)	
L203			L41-2785-39	SMALL FIXED INDUCTOR(0.27U)	
L204			L40-3375-71	SMALL FIXED INDUCTOR(33NH)	
L205			L40-3975-71	SMALL FIXED INDUCTOR(39NH)	
L206			L40-1085-71	SMALL FIXED INDUCTOR(100NH)	
L207			L41-2285-14	SMALL FIXED INDUCTOR(220NH)	
L209,210			L41-2778-14	SMALL FIXED INDUCTOR(27NH)	
L212			L92-0138-05	CHIP FERRITE	
L213			L41-1085-14	SMALL FIXED INDUCTOR(100NH)	
L214			L40-1275-92	SMALL FIXED INDUCTOR(12NH)	
L215,216			L41-3378-14	SMALL FIXED INDUCTOR(33NH)	
L220			L40-2785-92	SMALL FIXED INDUCTOR(270NH)	

PARTS LIST

TX-RX UNIT (X57-8230-1X)

Ref. No.	Address	New parts	Parts No.	Description	Destination
L221			L40-5663-71	SMALL FIXED INDUCTOR(5.6NH)	
L232,233			L41-3978-14	SMALL FIXED INDUCTOR(39NH)	
L301			L41-1585-14	SMALL FIXED INDUCTOR(150N)	
L302			L40-5681-86	SMALL FIXED INDUCTOR(0.56UH)	
L304			L40-5675-92	SMALL FIXED INDUCTOR(56NH)	
L307			L40-2291-86	SMALL FIXED INDUCTOR(2.2UH)	
L309			L40-1085-57	SMALL FIXED INDUCTOR(100NH)	
L310			L92-0138-05	CHIP FERRITE	
L317			L41-3985-39	SMALL FIXED INDUCTOR(0.39UH)	
L319			L41-1885-39	SMALL FIXED INDUCTOR(0.18UH)	
L404			L92-0639-05	CHIP FERRITE	
L405			L33-1496-05	SMALL FIXED INDUCTOR(22UH)	
L501			L92-0138-05	CHIP FERRITE	
L503			L92-0138-05	CHIP FERRITE	
L504-506			L92-0162-05	BEADS CORE	
L508			L92-0138-05	CHIP FERRITE	
L510			L92-0138-05	CHIP FERRITE	
L801			L79-1958-05	FILTER	HG
L802			L40-2775-57	SMALL FIXED INDUCTOR(27.0NH)	HG
L805,806			L92-0138-05	CHIP FERRITE	HG
X1			L77-3073-05	TCXO(16.8MHZ)	
X501			L77-3015-05	TCXO(18.432MHZ)	
XF1			L71-0678-05	MCF(49.95MHZ)	
CP1			RK74HB1J100J	CHIP-COM 10 J 1/16W	
CP501			RK74HB1J104J	CHIP-COM 100K J 1/16W	
CP502			RK74HA1J104J	CHIP-COM 100K J 1/16W	
CP503			RK74HB1J104J	CHIP-COM 100K J 1/16W	
CP504			RK74HA1J101J	CHIP-COM 100 J 1/16W	
CP505			RK74HA1J104J	CHIP-COM 100K J 1/16W	
CP506-508			RK74HB1J104J	CHIP-COM 100K J 1/16W	
CP510			RK74HA1J104J	CHIP-COM 100K J 1/16W	
CP511			RK74HA1J101J	CHIP-COM 100 J 1/16W	
CP512			RK74HA1J104J	CHIP-COM 100K J 1/16W	
CP513			RK74HB1J104J	CHIP-COM 100K J 1/16W	
CP514			RK74HA1J104J	CHIP-COM 100K J 1/16W	
CP515			RK74HA1J101J	CHIP-COM 100 J 1/16W	
CP516			RK74HB1J101J	CHIP-COM 100 J 1/16W	
CP701			RK74HB1J101J	CHIP-COM 100 J 1/16W	
CP703,704			RK74HB1J104J	CHIP-COM 100K J 1/16W	
CP705,706			RK74HA1J104J	CHIP-COM 100K J 1/16W	
CP707			RK74HB1J102J	CHIP-COM 1.0K J 1/16W	
R1			RK73HB1J000J	CHIP R 0 J 1/16W	
R10			RK73HB1J100J	CHIP R 10 J 1/16W	
R12			RK73HB1J683J	CHIP R 68K J 1/16W	
R13 ,14			RK73HB1J473J	CHIP R 47K J 1/16W	
R15			RK73HB1J100J	CHIP R 10 J 1/16W	
R16			RK73HB1J102J	CHIP R 1.0K J 1/16W	
R17			RK73HB1J104J	CHIP R 100K J 1/16W	
R18			RK73HB1J102J	CHIP R 1.0K J 1/16W	
R19 ,20			RK73HB1J000J	CHIP R 0 J 1/16W	
R21			RK73HB1J470J	CHIP R 47 J 1/16W	
R22			RK73HB1J121J	CHIP R 120 J 1/16W	
R23			RK73HB1J100J	CHIP R 10 J 1/16W	
R24			RK73HH1J391D	CHIP R 390 D 1/16W	
R25			RK73HB1J104J	CHIP R 100K J 1/16W	
R26			RK73HB1J102J	CHIP R 1.0K J 1/16W	
R27			RK73HB1J103J	CHIP R 10K J 1/16W	
R28			RK73HB1J106J	CHIP R 10M J 1/16W	
R29			RK73HB1J470J	CHIP R 47 J 1/16W	

Ref. No.	Address	New parts	Parts No.	Description	Destination
R30			RK73HB1J184J	CHIP R 180K J 1/16W	
R31			RK73HB1J473J	CHIP R 47K J 1/16W	
R33			RK73HB1J472J	CHIP R 4.7K J 1/16W	
R34			RK73HB1J182J	CHIP R 1.8K J 1/16W	
R35 -38			RK73HB1J000J	CHIP R 0 J 1/16W	
R39			RK73HB1J103J	CHIP R 10K J 1/16W	
R42 ,43			RK73HB1J104J	CHIP R 100K J 1/16W	
R44			RK73HB1J273J	CHIP R 27K J 1/16W	
R45 ,46			RK73HB1J473J	CHIP R 47K J 1/16W	
R48			RK73HB1J472J	CHIP R 4.7K J 1/16W	
R50			RK73HB1J560J	CHIP R 56 J 1/16W	
R51			RK73HB1J561J	CHIP R 560 J 1/16W	
R52			RK73HB1J474J	CHIP R 470K J 1/16W	
R53			RK73HB1J563J	CHIP R 56K J 1/16W	
R54			RN73HH1J331D	CHIP R 330 D 1/16W	
R55			RN73HH1J221D	CHIP R 220 D 1/16W	
R56			RK73HB1J000J	CHIP R 0 J 1/16W	
R57 ,58			RN73HH1J220D	CHIP R 22 D 1/16W	
R59			RK73HB1J102J	CHIP R 1.0K J 1/16W	
R60			RK73HB1J473J	CHIP R 47K J 1/16W	
R61			RK73HB1J154J	CHIP R 150K J 1/16W	
R62			RK73HB1J101J	CHIP R 100 J 1/16W	
R63			RK73HB1J103J	CHIP R 10K J 1/16W	
R64			RK73HB1J822J	CHIP R 8.2K J 1/16W	
R65 -67			RK73HB1J101J	CHIP R 100 J 1/16W	
R69			RK73HB1J472J	CHIP R 4.7K J 1/16W	
R70			RK73HB1J474J	CHIP R 470K J 1/16W	
R71			RK73HB1J101J	CHIP R 100 J 1/16W	
R72			RK73HB1J102J	CHIP R 1.0K J 1/16W	
R73			RK73GB2A000J	CHIP R 0 J 1/10W	
R75			RK73HB1J100J	CHIP R 10 J 1/16W	
R76			RK73HB1J000J	CHIP R 0 J 1/16W	
R80 -83			RK73GB2A000J	CHIP R 0 J 1/10W	
R86 -88			RK73HB1J000J	CHIP R 0 J 1/16W	
R101			RK73HB1J332J	CHIP R 3.3K J 1/16W	
R103			RK73HB1J000J	CHIP R 0 J 1/16W	
R111			RK73HB1J272J	CHIP R 2.7K J 1/16W	
R112			RK73HB1J182J	CHIP R 1.8K J 1/16W	
R113			RK73GB2A680J	CHIP R 68 J 1/10W	
R114			RK73HB1J331J	CHIP R 330 J 1/16W	
R115			RK73GB2A680J	CHIP R 68 J 1/10W	
R120			RK73HB1J153J	CHIP R 15K J 1/16W	
R121			RK73FB2B471J	CHIP R 470 J 1/8W	
R122,123			RK73FB2B220J	CHIP R 22 J 1/8W	
R125			RK73FB2B471J	CHIP R 470 J 1/8W	
R128			RK73HB1J471J	CHIP R 470 J 1/16W	
R130			RK73HB1J273J	CHIP R 27K J 1/16W	
R131			RK73HB1J103J	CHIP R 10K J 1/16W	
R133			RK73HB1J153J	CHIP R 15K J 1/16W	
R134			RK73GB2A181J	CHIP R 180 J 1/10W	
R135			RK73HB1J104J	CHIP R 100K J 1/16W	
R136			RK73GB2A181J	CHIP R 180 J 1/10W	
R137			RK73HB1J104J	CHIP R 100K J 1/16W	
R138			RK73HB1J103J	CHIP R 10K J 1/16W	
R139			RK73GH2A101D	CHIP R 100 D 1/10W	
R141			RK73HB1J333J	CHIP R 33K J 1/16W	
R142			RK73HB1J000J	CHIP R 0 J 1/16W	
R143			RK73HB1J104J	CHIP R 100K J 1/16W	
R145			RK73GB2A000J	CHIP R 0 J 1/10W	
R146			RK73HB1J393J	CHIP R 39K J 1/16W	

PARTS LIST

TX-RX UNIT (X57-8230-1X)

Ref. No.	Address	New parts	Parts No.	Description				Desti-nation
R147			RK73HB1J124J	CHIP R	120K	J	1/16W	
R148			RK73HB1J000J	CHIP R	0	J	1/16W	
R149			RK73HB1J103J	CHIP R	10K	J	1/16W	
R150			RK73HB1J124J	CHIP R	120K	J	1/16W	
R152			RK73HB1J102J	CHIP R	1.0K	J	1/16W	
R154			RK73HB1J000J	CHIP R	0	J	1/16W	
R155			RK73HB1J223J	CHIP R	22K	J	1/16W	
R157,158			RK73HB1J333J	CHIP R	33K	J	1/16W	
R159,160			RK73HB1J000J	CHIP R	0	J	1/16W	
R161			RK73HB1J104J	CHIP R	100K	J	1/16W	
R167			RK73HB1J153J	CHIP R	15K	J	1/16W	
R168,169			RK73EB2E241J	CHIP R	240	J	1/4W	
R171	2B		R92-1061-05	JUMPER REST		0 OHM		
R176			RK73GB2A471J	CHIP R	470	J	1/10W	
R177,178			RK73HB1J000J	CHIP R	0	J	1/16W	
R179,180			RK73HB1J333J	CHIP R	33K	J	1/16W	
R181			RK73HB1J000J	CHIP R	0	J	1/16W	
R183			RK73HB1J103J	CHIP R	10K	J	1/16W	
R184			RK73HB1J473J	CHIP R	47K	J	1/16W	
R201			RK73HB1J470J	CHIP R	47	J	1/16W	
R203			RK73HB1J681J	CHIP R	680	J	1/16W	
R204			RK73HB1J472J	CHIP R	4.7K	J	1/16W	
R205			RK73HB1J151J	CHIP R	150	J	1/16W	
R207			RK73HB1J104J	CHIP R	100K	J	1/16W	
R208			RK73HB1J184J	CHIP R	180K	J	1/16W	
R209			RK73HB1J104J	CHIP R	100K	J	1/16W	
R210			RK73HB1J224J	CHIP R	220K	J	1/16W	
R212			RK73HB1J104J	CHIP R	100K	J	1/16W	
R223			RK73HB1J000J	CHIP R	0	J	1/16W	
R230			RK73HB1J000J	CHIP R	0	J	1/16W	
R233			RK73HB1J274J	CHIP R	270K	J	1/16W	
R234			RK73HB1J104J	CHIP R	100K	J	1/16W	
R235			RK73HB1J103J	CHIP R	10K	J	1/16W	
R237			RK73HB1J104J	CHIP R	100K	J	1/16W	
R241			RK73HB1J103J	CHIP R	10K	J	1/16W	
R242			RK73HB1J154J	CHIP R	150K	J	1/16W	
R243			RK73HB1J104J	CHIP R	100K	J	1/16W	
R245			RK73HB1J102J	CHIP R	1.0K	J	1/16W	
R246			RK73HB1J100J	CHIP R	10	J	1/16W	
R247			RK73HB1J390J	CHIP R	39	J	1/16W	
R249			RK73HB1J472J	CHIP R	4.7K	J	1/16W	
R250			RK73HB1J222J	CHIP R	2.2K	J	1/16W	
R255-258			RK73HB1J104J	CHIP R	100K	J	1/16W	
R259			RK73HB1J000J	CHIP R	0	J	1/16W	
R303-305			RK73HB1J102J	CHIP R	1.0K	J	1/16W	
R306			RK73HB1J334J	CHIP R	330K	J	1/16W	
R307			RK73HB1J561J	CHIP R	560	J	1/16W	
R308			RK73HB1J000J	CHIP R	0	J	1/16W	
R315			RK73HB1J000J	CHIP R	0	J	1/16W	
R316			RK73HB1J332J	CHIP R	3.3K	J	1/16W	
R323			RK73HB1J000J	CHIP R	0	J	1/16W	
R324			RK73HB1J183J	CHIP R	18K	J	1/16W	
R326			RK73GB2A331J	CHIP R	330	J	1/10W	
R328			RK73HB1J183J	CHIP R	18K	J	1/16W	
R329			RK73HB1J100J	CHIP R	10	J	1/16W	
R332			RK73HB1J000J	CHIP R	0	J	1/16W	
R336,337			RK73HB1J102J	CHIP R	1.0K	J	1/16W	
R338			RK73HB1J473J	CHIP R	47K	J	1/16W	
R339			RK73HB1J153J	CHIP R	15K	J	1/16W	
R340			RK73HB1J274J	CHIP R	270K	J	1/16W	

Ref. No.	Address	New parts	Parts No.	Description				Desti-nation
R341			RK73HB1J103J	CHIP R	10K	J	1/16W	
R342			RK73HB1J104J	CHIP R	100K	J	1/16W	
R343			RK73HB1J223J	CHIP R	22K	J	1/16W	
R344			RK73HB1J272J	CHIP R	2.7K	J	1/16W	
R345			RK73HB1J000J	CHIP R	0	J	1/16W	
R350			RK73HB1J103J	CHIP R	10K	J	1/16W	
R351			RK73HB1J104J	CHIP R	100K	J	1/16W	
R355			RK73HB1J000J	CHIP R	0	J	1/16W	
R357			RK73HB1J124J	CHIP R	120K	J	1/16W	
R358			RK73HB1J333J	CHIP R	33K	J	1/16W	
R368			RK73HB1J221J	CHIP R	220	J	1/16W	
R378			RK73HB1J394J	CHIP R	390K	J	1/16W	
R379			RK73HB1J222J	CHIP R	2.2K	J	1/16W	
R381			RK73HB1J221J	CHIP R	220	J	1/16W	
R390			RK73HB1J103J	CHIP R	10K	J	1/16W	
R394			RK73HB1J181J	CHIP R	180	J	1/16W	
R401			RK73HB1J471J	CHIP R	470	J	1/16W	
R402			RK73HB1J103J	CHIP R	10K	J	1/16W	
R403			RK73HH1J274D	CHIP R	270K	D	1/16W	
R404			RK73HH1J104D	CHIP R	100K	D	1/16W	
R405,406			RK73HB1J103J	CHIP R	10K	J	1/16W	
R407			RK73HB1J472J	CHIP R	4.7K	J	1/16W	
R408			RK73HB1J684J	CHIP R	680K	J	1/16W	
R409			RK73HB1J104J	CHIP R	100K	J	1/16W	
R410			RK73GB2A4R7J	CHIP R	4.7	J	1/10W	
R411			RK73HB1J473J	CHIP R	47K	J	1/16W	
R412,413			RK73GB2A100J	CHIP R	10	J	1/10W	
R414,415			RK73HB1J103J	CHIP R	10K	J	1/16W	
R417			RK73HB1J104J	CHIP R	100K	J	1/16W	
R418			RK73HB1J000J	CHIP R	0	J	1/16W	
R419			RK73HB1J272J	CHIP R	2.7K	J	1/16W	
R421			RK73HB1J472J	CHIP R	4.7K	J	1/16W	
R422			RK73HB1J474J	CHIP R	470K	J	1/16W	
R423			RK73HB1J472J	CHIP R	4.7K	J	1/16W	
R424			RK73HB1J103J	CHIP R	10K	J	1/16W	
R425			RK73HH1J124D	CHIP R	120K	D	1/16W	
R426			RK73HH1J183D	CHIP R	18K	D	1/16W	
R427			RK73HH1J223D	CHIP R	22K	D	1/16W	
R428			RK73HB1J102J	CHIP R	1.0K	J	1/16W	
R429			RK73HB1J000J	CHIP R	0	J	1/16W	
R430			RK73HB1J102J	CHIP R	1.0K	J	1/16W	
R431			RK73HB1J000J	CHIP R	0	J	1/16W	
R432			RK73HB1J103J	CHIP R	10K	J	1/16W	
R433			RK73HB1J274J	CHIP R	270K	J	1/16W	
R434			RK73HB1J103J	CHIP R	10K	J	1/16W	
R435			RK73HB1J000J	CHIP R	0	J	1/16W	
R438			RK73GB2A100J	CHIP R	10	J	1/10W	
R439			RK73HB1J474J	CHIP R	470K	J	1/16W	
R440			RK73HB1J000J	CHIP R	0	J	1/16W	
R441			RK73HB1J272J	CHIP R	2.7K	J	1/16W	
R501			RK73HB1J220J	CHIP R	22	J	1/16W	
R503,504			RK73HB1J104J	CHIP R	100K	J	1/16W	
R505,506			RK73GB2A000J	CHIP R	0	J	1/10W	
R508-511			RK73HB1J101J	CHIP R	100	J	1/16W	
R512			RK73HB1J104J	CHIP R	100K	J	1/16W	
R513			RK73HB1J000J	CHIP R	0	J	1/16W	
R515-517			RK73HB1J000J	CHIP R	0	J	1/16W	
R518			RK73HB1J101J	CHIP R	100	J	1/16W	
R519			RK73HB1J000J	CHIP R	0	J	1/16W	
R521,522			RK73HB1J104J	CHIP R	100K	J	1/16W	

PARTS LIST

TX-RX UNIT (X57-8230-1X)

Ref. No.	Address	New parts	Parts No.	Description				Desti-nation
R524			RK73HB1J000J	CHIP R	0	J	1/16W	
R525			RK73HB1J474J	CHIP R	470K	J	1/16W	
R526			RK73HB1J104J	CHIP R	100K	J	1/16W	
R531			RK73HB1J104J	CHIP R	100K	J	1/16W	
R532			RK73HB1J000J	CHIP R	0	J	1/16W	
R533,534			RK73HB1J473J	CHIP R	47K	J	1/16W	
R536			RK73HB1J000J	CHIP R	0	J	1/16W	
R541			RK73HB1J101J	CHIP R	100	J	1/16W	
R546			RK73HB1J000J	CHIP R	0	J	1/16W	
R549			RK73HB1J103J	CHIP R	10K	J	1/16W	
R550			RK73HB1J104J	CHIP R	100K	J	1/16W	
R552,553			RK73HB1J472J	CHIP R	4.7K	J	1/16W	
R554			RK73HB1J332J	CHIP R	3.3K	J	1/16W	
R555			RK73HB1J102J	CHIP R	1.0K	J	1/16W	
R556			RK73HB1J220J	CHIP R	22	J	1/16W	
R557			RK73HB1J153J	CHIP R	15K	J	1/16W	
R558			RK73HB1J220J	CHIP R	22	J	1/16W	
R559			RK73HB1J392J	CHIP R	3.9K	J	1/16W	
R560			RK73HB1J474J	CHIP R	470K	J	1/16W	
R561			RK73HB1J000J	CHIP R	0	J	1/16W	HG
R566			RK73HB1J474J	CHIP R	470K	J	1/16W	
R567			RK73HB1J102J	CHIP R	1.0K	J	1/16W	
R568,569			RK73HB1J000J	CHIP R	0	J	1/16W	
R571,572			RK73HB1J000J	CHIP R	0	J	1/16W	
R580			RK73HB1J332J	CHIP R	3.3K	J	1/16W	
R581			RK73HB1J104J	CHIP R	100K	J	1/16W	
R583			RK73HH1J104D	CHIP R	100K	D	1/16W	
R584			RK73HB1J473J	CHIP R	47K	J	1/16W	
R599			RK73HB1J104J	CHIP R	100K	J	1/16W	
R603			RK73HB1J474J	CHIP R	470K	J	1/16W	
R606			RK73HB1J105J	CHIP R	1.0M	J	1/16W	
R610			RK73HB1J474J	CHIP R	470K	J	1/16W	
R611			RK73HB1J103J	CHIP R	10K	J	1/16W	
R612			RK73HB1J102J	CHIP R	1.0K	J	1/16W	
R613			RK73HB1J103J	CHIP R	10K	J	1/16W	
R614			RK73HB1J000J	CHIP R	0	J	1/16W	
R615			RK73HB1J472J	CHIP R	4.7K	J	1/16W	
R616			RK73HB1J474J	CHIP R	470K	J	1/16W	
R617			RK73HB1J000J	CHIP R	0	J	1/16W	
R620			RK73HB1J103J	CHIP R	10K	J	1/16W	
R621-624			RK73HB1J104J	CHIP R	100K	J	1/16W	
R626			RK73HB1J101J	CHIP R	100	J	1/16W	
R627,628			RK73HB1J682J	CHIP R	6.8K	J	1/16W	
R629			RK73HB1J104J	CHIP R	100K	J	1/16W	
R631			RK73HB1J104J	CHIP R	100K	J	1/16W	
R632			RK73GB2A000J	CHIP R	0	J	1/10W	
R634			RK73HB1J101J	CHIP R	100	J	1/16W	
R635			RK73GB2A000J	CHIP R	0	J	1/10W	
R636			RK73HB1J474J	CHIP R	470K	J	1/16W	
R637,638			RK73FB2B102J	CHIP R	1.0K	J	1/8W	
R639			RK73HB1J471J	CHIP R	470	J	1/16W	
R641			RK73GB2A000J	CHIP R	0	J	1/10W	
R643			RK73GB2A000J	CHIP R	0	J	1/10W	
R657			RK73HB1J472J	CHIP R	4.7K	J	1/16W	
R658,659			RK73GB2A000J	CHIP R	0	J	1/10W	
R661			RK73HB1J473J	CHIP R	47K	J	1/16W	
R662			RK73GB2A000J	CHIP R	0	J	1/10W	
R664			RK73GB2A000J	CHIP R	0	J	1/10W	
R667			RK73GB2A101J	CHIP R	100	J	1/10W	
R668			RK73HB1J471J	CHIP R	470	J	1/16W	

Ref. No.	Address	New parts	Parts No.	Description				Desti-nation
R669-671			RK73HB1J101J	CHIP R	100	J	1/16W	
R672			RK73GB2A471J	CHIP R	470	J	1/10W	
R673			RK73HB1J104J	CHIP R	100K	J	1/16W	
R674			RK73HB1J105J	CHIP R	1.0M	J	1/16W	
R677-680			RK73GB2A000J	CHIP R	0	J	1/10W	
R681			RK73HB1J000J	CHIP R	0	J	1/16W	
R682,683			RK73GB2A000J	CHIP R	0	J	1/10W	
R684			RK73HB1J473J	CHIP R	47K	J	1/16W	
R685			RK73HB1J103J	CHIP R	10K	J	1/16W	
R686			RK73HB1J223J	CHIP R	22K	J	1/16W	
R687			RK73HB1J103J	CHIP R	10K	J	1/16W	
R688			RK73HB1J102J	CHIP R	1.0K	J	1/16W	
R690			RK73HB1J102J	CHIP R	1.0K	J	1/16W	
R701			RK73HB1J103J	CHIP R	10K	J	1/16W	
R702			RK73HB1J222J	CHIP R	2.2K	J	1/16W	
R703			RK73HB1J563J	CHIP R	56K	J	1/16W	
R704			RK73HB1J153J	CHIP R	15K	J	1/16W	
R705			RK73HB1J683J	CHIP R	68K	J	1/16W	
R706			RK73HB1J823J	CHIP R	82K	J	1/16W	
R707			RK73HB1J182J	CHIP R	1.8K	J	1/16W	
R708			RK73HB1J333J	CHIP R	33K	J	1/16W	
R709			RK73HB1J104J	CHIP R	100K	J	1/16W	
R710			RK73HB1J563J	CHIP R	56K	J	1/16W	
R711			RK73HB1J104J	CHIP R	100K	J	1/16W	
R712			RK73HB1J473J	CHIP R	47K	J	1/16W	
R713			RK73HB1J223J	CHIP R	22K	J	1/16W	
R716			RK73HB1J104J	CHIP R	100K	J	1/16W	
R720			RK73HB1J334J	CHIP R	330K	J	1/16W	
R722			RK73HB1J104J	CHIP R	100K	J	1/16W	
R724			RK73HB1J473J	CHIP R	47K	J	1/16W	
R728			RK73HB1J393J	CHIP R	39K	J	1/16W	
R730			RK73HB1J473J	CHIP R	47K	J	1/16W	
R738			RK73HB1J103J	CHIP R	10K	J	1/16W	
R739			RK73HB1J334J	CHIP R	330K	J	1/16W	
R741			RK73HB1J470J	CHIP R	47	J	1/16W	
R742			RK73HB1J332J	CHIP R	3.3K	J	1/16W	
R743			RK73HB1J471J	CHIP R	470	J	1/16W	
R745			RK73HB1J104J	CHIP R	100K	J	1/16W	
R746			RK73HB1J103J	CHIP R	10K	J	1/16W	
R748,749			RK73HB1J104J	CHIP R	100K	J	1/16W	
R750			RK73HB1J393J	CHIP R	39K	J	1/16W	
R751			RK73HB1J104J	CHIP R	100K	J	1/16W	
R752			RK73HB1J394J	CHIP R	390K	J	1/16W	
R754			RK73HB1J563J	CHIP R	56K	J	1/16W	
R755			RK73HB1J224J	CHIP R	220K	J	1/16W	
R756			RK73HB1J102J	CHIP R	1.0K	J	1/16W	
R769			RK73HB1J684J	CHIP R	680K	J	1/16W	
R770,771			RK73HB1J473J	CHIP R	47K	J	1/16W	
R772			RK73HB1J153J	CHIP R	15K	J	1/16W	
R773			RK73HB1J000J	CHIP R	0	J	1/16W	
R775			RK73HB1J562J	CHIP R	5.6K	J	1/16W	
R776,777			RK73HB1J103J	CHIP R	10K	J	1/16W	
R778			RK73HB1J273J	CHIP R	27K	J	1/16W	
R779			RK73HB1J223J	CHIP R	22K	J	1/16W	
R783			RK73HB1J154J	CHIP R	150K	J	1/16W	
R785			RK73HB1J000J	CHIP R	0	J	1/16W	
R786			RK73HB1J563J	CHIP R	56K	J	1/16W	
R787			RK73HB1J123J	CHIP R	12K	J	1/16W	
R796,797			RK73GB2A000J	CHIP R	0	J	1/10W	
R800			RK73HB1J104J	CHIP R	100K	J	1/16W	

PARTS LIST

TX-RX UNIT (X57-8230-1X)

Ref. No.	Address	New parts	Parts No.	Description	Destination
R801			RK73HB1J102J	CHIP R 1.0K J 1/16W	H
R801,802			RK73HB1J102J	CHIP R 1.0K J 1/16W	HG
R803,804			RK73HB1J472J	CHIP R 4.7K J 1/16W	
R805,806			RK73HB1J102J	CHIP R 1.0K J 1/16W	
R810			RK73HB1J123J	CHIP R 12K J 1/16W	
R811			RK73HB1J103J	CHIP R 10K J 1/16W	
R813			RK73HB1J102J	CHIP R 1.0K J 1/16W	
R814			RK73HB1J391J	CHIP R 390 J 1/16W	
R816			RK73HB1J123J	CHIP R 12K J 1/16W	
R818			RK73HB1J332J	CHIP R 3.3K J 1/16W	
R819,820			RK73HB1J222J	CHIP R 2.2K J 1/16W	
R821,822			RK73GB2A000J	CHIP R 0 J 1/10W	
R823			RK73HB1J123J	CHIP R 12K J 1/16W	
R824			RK73HB1J332J	CHIP R 3.3K J 1/16W	
R825			RK73HB1J000J	CHIP R 0 J 1/16W	
R826			RK73HB1J103J	CHIP R 10K J 1/16W	
R827			RK73HB1J823J	CHIP R 82K J 1/16W	
R831,832			RK73HB1J683J	CHIP R 68K J 1/16W	
R833			RK73HB1J101J	CHIP R 100 J 1/16W	
R834			RK73HB1J102J	CHIP R 1.0K J 1/16W	
R835			RK73HB1J100J	CHIP R 10 J 1/16W	HG
R837			RK73HB1J562J	CHIP R 5.6K J 1/16W	
R838			RK73HB1J332J	CHIP R 3.3K J 1/16W	
R839			RK73EB2E100J	CHIP R 10 J 1/4W	HG
R842-844			RK73HB1J000J	CHIP R 0 J 1/16W	HG
R845			RK73HB1J101J	CHIP R 100 J 1/16W	
R846,847			RK73HB1J223J	CHIP R 22K J 1/16W	
D2			DZ2J091(M)	ZENER DIODE	
D4 ,5			1SV325F	VARIABLE CAPACITANCE DIODE	
D6			1SV305F	VARIABLE CAPACITANCE DIODE	
D7 -12			1SV282-F	VARIABLE CAPACITANCE DIODE	
D13			1SV305F	VARIABLE CAPACITANCE DIODE	
D14			DA2S101	DIODE	
D15			1SV278F	VARIABLE CAPACITANCE DIODE	
D16 ,17			RKS151KJ	DIODE	
D101			DZ2J056(M)	ZENER DIODE	
D102			DA3S101F	DIODE	
D103			RKS151KJ	DIODE	
D104,105			HSB88AS-E	DIODE	
D106			DZ2J056(M)	ZENER DIODE	
D107			RKP351KW-1P2	DIODE	
D108,109			RB520SM-30	DIODE	
D110,111			L407CDB	DIODE	
D112-114			RN142S	DIODE	
D202,203			1SV283F	VARIABLE CAPACITANCE DIODE	
D204-207			1SV325F	VARIABLE CAPACITANCE DIODE	
D401			DZ2J180(M)	ZENER DIODE	
D403			RB520SM-30	DIODE	
D404			DA2S101	DIODE	
D405			DB2S310	DIODE	
D406			DB22306	DIODE	
D407			RB520SM-30	DIODE	
D408,409			DB2S310	DIODE	
D410			22ZR-10D	SURGE ABSORBER	
D411			DSA3A1	DIODE	
D502			DB2S310	DIODE	
D504			DB2S310	DIODE	
D505-510			MC2850	DIODE	
D511-513			DB2S310	DIODE	

Ref. No.	Address	New parts	Parts No.	Description	Destination
D601			DB2S310	DIODE	
D701			DA2S101	DIODE	
D702			1SS422	DIODE	
D703,704			DA3S101F	DIODE	
D705,706			EMZ6.8N	ZENER DIODE	
D801,802			RN142S	DIODE	HG
IC1			TA7808F-NQ	ANALOGUE IC	
IC2			SKY72310-362	MOS-IC	
IC3			BD7542FVM	MOS-IC	
IC102	2B		RA60H1317M1A	POWER MODULE	
IC103			NJM12904RB1	MOS-IC	
IC201			BD7542FVM	MOS-IC	
IC301			TC7SH08FU-F	MOS-IC	
IC303			TK10931VTL-G	ANALOGUE IC	
IC304			BU7445HFV	MOS-IC	
IC401			XC6209B332M-G	MOS-IC	
IC402			XC6118C23CMR	MOS-IC	
IC404			XC6209B502P-G	MOS-IC	
IC405			LT1616ES6-PBF	ANALOGUE IC	
IC406			XC6209B332M-G	MOS-IC	
IC407			NJM2878F4-33	ASIC	
IC408			XC6205B152P-G	MOS-IC	
IC409			NJM2878F4-33	BI-POLAR IC	
IC501			**Note1(BGA)**	ROM IC	
IC502			**Note1(BGA)**	DSP IC	
IC503			**Note1(BGA)**	SRAM IC	
IC504			BD5329FVE	MOS-IC	
IC506			SM5023CNDH-G	MOS-IC	
IC507			**Note1(BGA)**	MOS-IC	
IC508			TC7SH08FU-F	MOS-IC	
IC509			TC7WH126FU-F	MOS-IC	
IC511			TC74VHCT244AFK	MOS-IC	
IC512			TC7WBD125AFK	MOS-IC	
IC513			TC7WT126FU-F	MOS-IC	
IC514			TC7WH126FU-F	MOS-IC	
IC515			PCA9535BS	MOS-IC	
IC516			ADM202EARNZ	MOS-IC	
IC701			BU7462NUX	MOS-IC	
IC702			BU7242NUX	MOS-IC	
IC703			BU7462NUX	MOS-IC	
IC705			BU7242NUX	MOS-IC	
IC711			BU7462NUX	MOS-IC	
IC712			R2A20178NP	DAC IC	
IC713			TC7W53FK(F)	MOS-IC	
IC714	2A		LA4600	BI-POLAR IC	
IC716			TC7WT126FU-F	MOS-IC	
IC801			TC7WH126FU-F	MOS-IC	HG
Q1			LTC014EEBFS8	TRANSISTOR	
Q2			2SJ648-A	FET	
Q4			2SC5383-T111	TRANSISTOR	
Q5			2SC5108(Y)F	TRANSISTOR	
Q6 ,7			MCH3914(7)-H	FET	
Q8			EM6M1	FET	
Q9			SSM3J15FS	FET	
Q10 ,11			2SC5108(Y)F	TRANSISTOR	
Q102			2SC3357-A	TRANSISTOR	
Q105			FK330301	FET	
Q106			EMD5	TRANSISTOR	
Q201			3SK318	FET	
Q202			NESG240034	TRANSISTOR	

If a part reference number is listed in a shaded box, that part does not come with the PCB.
Note 1: This part cannot be replaced. Therefore, this part is not supplied as a service part.

PARTS LIST

TX-RX UNIT (X57-8230-1X)

Ref. No.	Address	New parts	Parts No.	Description	Desti-nation
Q303			2SC5108(Y)F	TRANSISTOR	
Q305			2SC4215-F(Y)	TRANSISTOR	
Q401			LTC014EEBFS8	TRANSISTOR	
Q402			2SA1955A-F	TRANSISTOR	
Q403			MTM981400BF	FET	
Q404			2SA1955A-F	TRANSISTOR	
Q405			LTC014EEBFS8	TRANSISTOR	
Q407			FK330301	FET	
Q408			EMD5	TRANSISTOR	
Q409			EM6M1	FET	
Q410			2SA1955A-F	TRANSISTOR	
Q411,412			LTC014EEBFS8	TRANSISTOR	
Q414			EMD9	TRANSISTOR	
Q415			2SC4738(GR)F	TRANSISTOR	
Q416			2SA1832(GR)F	TRANSISTOR	
Q417			EMD5	TRANSISTOR	
Q418			LTC014EEBFS8	TRANSISTOR	
Q501			FK330301	FET	
Q502			LTC014TEBFS8	TRANSISTOR	
Q503			MTM981400BF	FET	
Q504			LTC014TEBFS8	TRANSISTOR	
Q701			FK330301	FET	
Q702			KTC4075E(Y,GR)	TRANSISTOR	
Q703			2SA1832(GR)F	TRANSISTOR	
Q704			2SC4738(GR)F	TRANSISTOR	
Q705,706			SSM3J15FS	FET	
Q708			LTC014EEBFS8	TRANSISTOR	
Q709			SSM6N37FE	FET	
TH1			ERTJ0EV104H	THERMISTOR(100K)	
TH101			ERTJ0EV104H	THERMISTOR(100K)	
TH103			ERTJ0EV104H	THERMISTOR(100K)	
TH701			ERTJ0EV104H	THERMISTOR(100K)	
A801			W02-3768-05	GPS MODULE	HG

Ref. No.	Address	New parts	Parts No.	Description	Desti-nation

EXPLODED VIEW

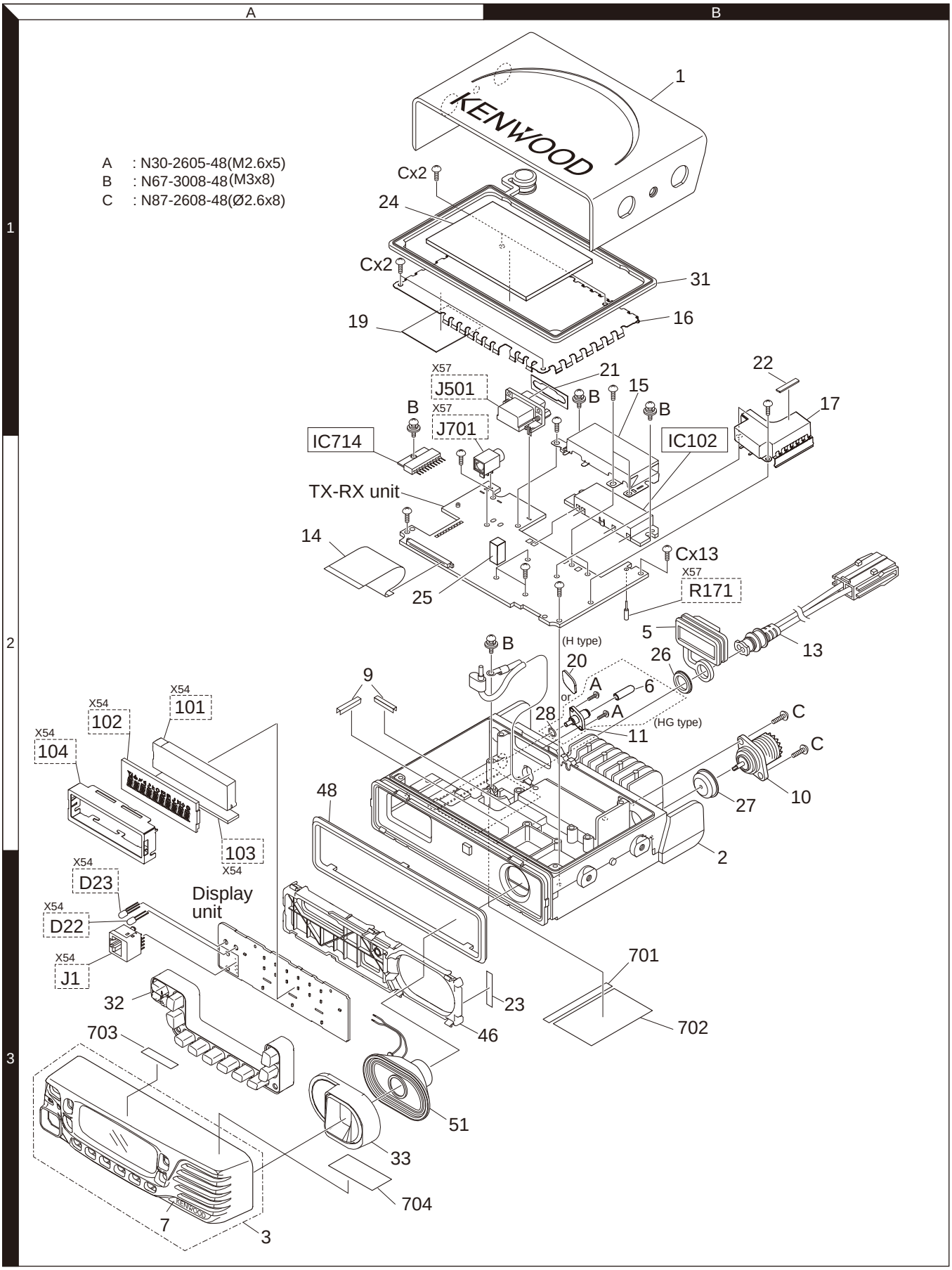

Parts with the exploded numbers larger than 700 are not supplied.
If a part reference number is listed in a box on the exploded view of the PCB, that part does not come with the PCB.
These parts must be ordered separately.

PACKING

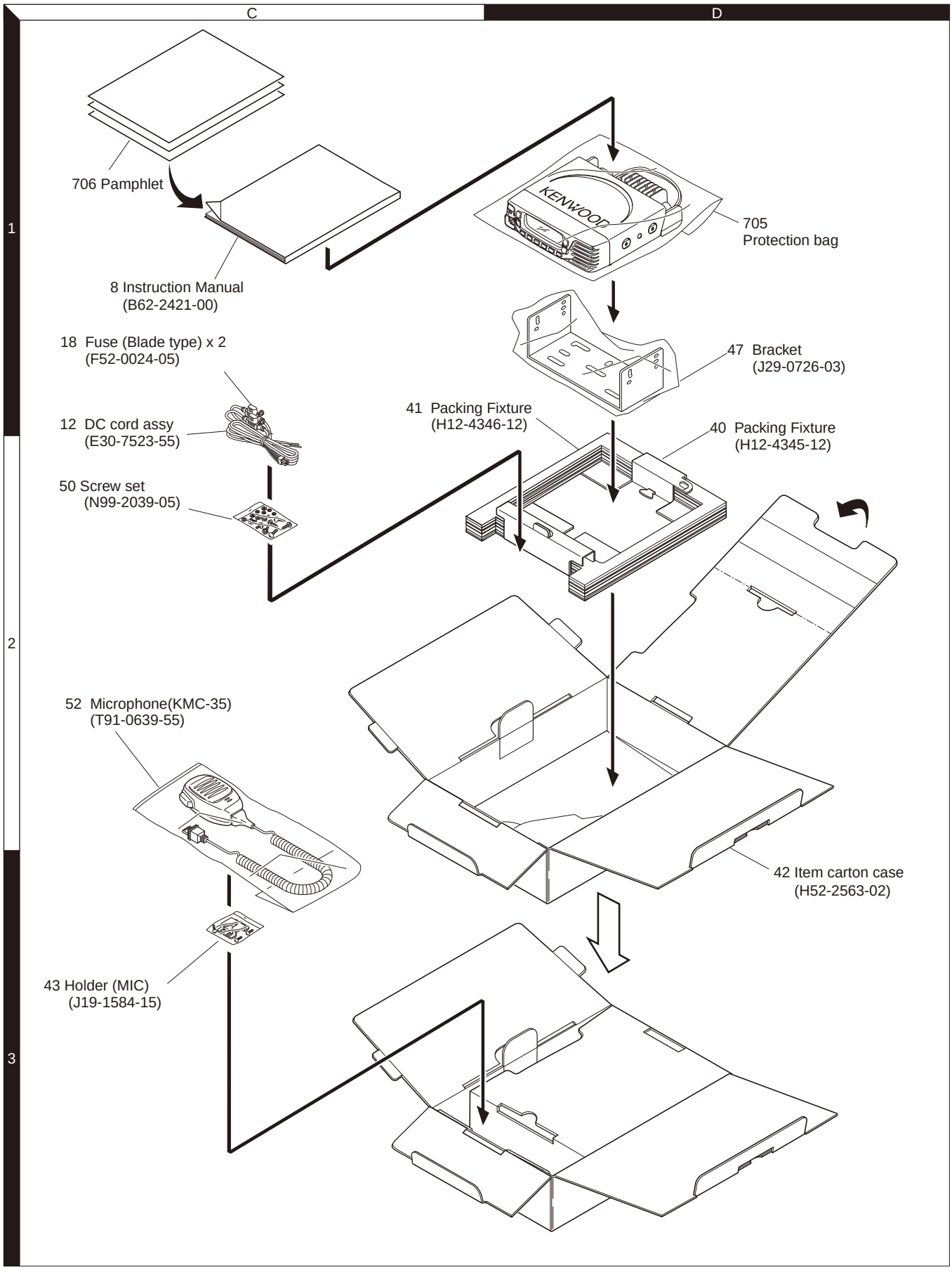

Parts with the exploded numbers larger than 700 are not supplied.

Fault Diagnosis of the BGA (Ball Grid Array) IC

■ Overview

A flowchart for determining whether or not the transceiver can be powered on (the LCD does not function even if the power switch is turned on) due to broken BGA parts.

■ BGA parts

ASIC (IC507), DSP (IC502), FLASH (IC501), SRAM (IC503)

When the BGA IC is problematic, please bring the printed circuit board (X57-8230-12 /-13) in for service. Various ESN/default adjustment values are written on the printed circuit board for service.
Additionally various ESN stickers are included.
After the printed circuit board has been readjusted, please attach any ESN stickers to the chassis. When “ESN Validation” is used with Trunking, you must modify the ESN register.

● Checking power supply voltage

Checking voltage

Points to be checked	Normal voltage
33M IC401 (5 pin)	3.3V
15M IC408 (5 pin)	1.5V
33A IC406 (5 pin)	3.3V

Power supply of each device is connected through the coil.
[ASIC]
33M: L508, 15M: L510, 33A: R571
[DSP]
33M: L503, 15M: R505
[FLASH]
33M: L501
[SRAM]
33M: L504

When an abnormal value is confirmed. →

Checking for an abnormal point

33M has an abnormal voltage.
[ASIC]
Remove L508 to check the voltage of the 33M.
If the voltage becomes normal, the ASIC is broken.
[DSP]
Remove L503 to check the voltage of the 33M.
If the voltage becomes normal, the DSP is broken.
[FLASH]
Remove L501 to check the voltage of the 33M.
If the voltage becomes normal, the FLASH is broken.
[SRAM]
Remove L504 to check the voltage of the 33M.
If the voltage becomes normal, the SRAM is broken.

15M has an abnormal voltage.
[ASIC]
Remove L510 to check the voltage of the 15M.
If the voltage becomes normal, the ASIC is broken.
[DSP]
Remove R505 to check the voltage of the 15M.
If the voltage becomes normal, the DSP is broken.

33A has an abnormal voltage.
[ASIC]
Remove R571 to check the voltage of the 33A.
If the voltage becomes normal, the ASIC is broken.

If the voltage is not corrected, there is a problem other than the BGA parts.

When a normal value is confirmed. ↓

● Checking the clock

Checking the clock

Points to be checked	Normal voltage (3.3V)
18.432MHz IC506 (4 pin)	18.432MHz

When an abnormal value is confirmed. →

Remove the R556 . If it oscillates normally, the DSP and ASIC may be broken.
Remove the R501. If it oscillates normally, the DSP and ASIC may be broken.

When a normal value is confirmed. ↓

● Checking the Reset/Control signal

Checking the control signal input to the ASIC

Points to be checked	Normal voltage
RST (RESET) IC504 (1 pin)	3.3V
/BINT IC402 (1 pin)	3.3V
/OVRB D403 (Cathode side)	3.3V

When an abnormal value is confirmed. →

The BGA parts are not broken.
Check the other point then BGA parts.

When a normal value is confirmed. ↓

Checking the ASIC input switch signal
The POWER key is pressed and held.

Points to be checked	Confirmed voltage
POWER R690	ON: 0V
The ignition key is kept ON.	OFF: 3.3V
Points to be checked	Confirmed voltage
/IGN C633 (Q504-Collector Side)	ON: 0V
	OFF: 3.3V

When an abnormal value is confirmed. →

When a normal value is confirmed. ↓

● Checking the output signal from the ASIC

Points to be checked	Normal voltage
/FRST R516	3.3V

When an abnormal value is confirmed. →

If the /FRST is always 0V, the ASIC is broken.

If the /FRST repeats 3.3V and 0V at intervals, the ASIC, FLASH and SRAM may be broken.

When a normal value is confirmed. ↓

TROUBLE SHOOTING

● Checking the signal output from the ASIC by software control

Points to be checked	Normal voltage	When an abnormal value is confirmed.
SBC R407	3.3V	Remove R407. If the ASIC side is 0V, the ASIC/FLASH/SRAM may be broken.
/DRST R524	3.3V	If the /DRST is 0V, the ASIC/FLASH/SRAM are broken.

● Panel control (TX-RX unit: AVR)

Points to be checked	Normal voltage	When an abnormal value is confirmed.
50C CN412	5.0V	If the SBC is 3.3V, when the voltage value of 80C and 50C is abnormal, the BGA parts are not broken.
80C CN414	8.0V	If the SBC is 3.3V, when the voltage value of 80C and 50C is abnormal, the BGA parts are not broken.

● Panel control (Display unit)

Checking the Control signal Points to be checked	Normal voltage	When an abnormal value is confirmed.
LCDCE CN514 (20 pin) LCDCL CN514 (21 pin) LCDDI CN514 (19 pin)	5.0V or 0V	If Display unit is removed and a waveform becomes normal, the BGA parts are not broken. When a waveform is abnormal, the IC511 may be broken.

When a normal value is confirmed.

It is unlikely that the BGA parts are broken.

● When an error display appears on the LCD.

The LCD displays “ ERROR 1”.	An error occurs when the ASIC internal RAM reads or writes. The ASIC may be broken.
The LCD displays “ ERROR 2”.	An error occurs when the DSP internal RAM reads or writes. The DSP may be broken.
The LCD displays “ ERROR 3”.	An error occurs when the SRAM reads or writes. The SRAM may be broken.

TROUBLE SHOOTING

Failure diagnosis of the GPS section (Built-in GPS model only)

Overview: When the GPS function does not operate, use this flowchart to determine the problem.

Note:

The transceiver supplies the voltage to the GPS antenna and the voltage is checked when the transceiver is turned "ON". When the voltage is lower than the specified value, "G ANT FAIL" is displayed for 2 seconds before entering user mode. (At this time, the expected defect of the GPS antenna is a short. This error message does not appear when the expected defect is an open.)

Major parts for a GPS circuit
- GPS module (A801) : W02-3768-05
- Buffer IC (IC801) : TC7WH126FUF
- Filter (L801) : L79-1958-05
- GPS active antenna : KRA-40 (option)

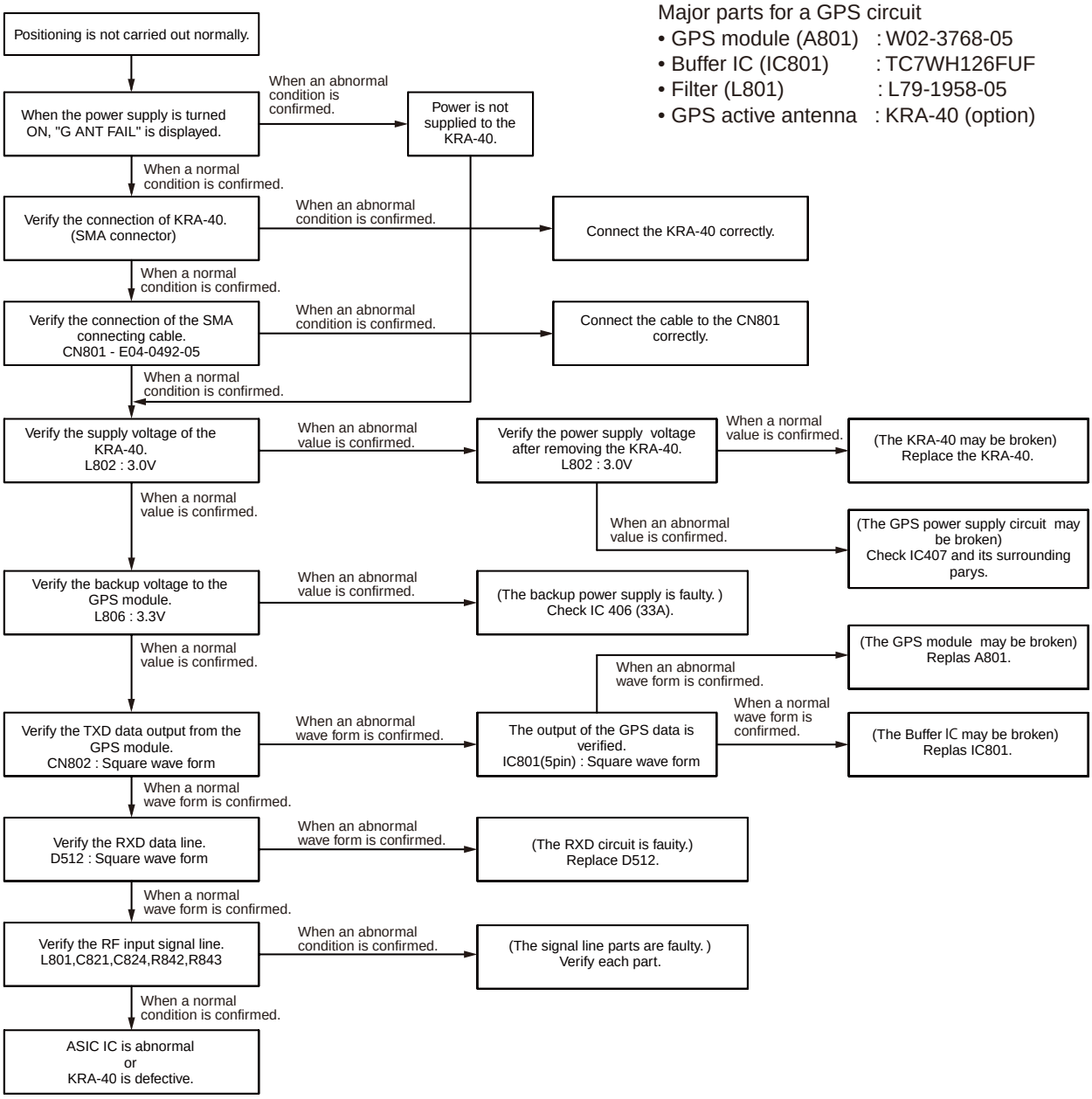

Replacing TX-RX Unit

■ TX-RX unit Information

Model Name	Frequency Range [MHz]	Original TX-RX unit Number	For Service TX-RX unit Number
NX-720H(G) (GPS model): K	136 - 174	X57-8230-10	X57-8230-12
NX-720H: K	136 - 174	X57-8230-11	X57-8230-13

TROUBLE SHOOTING

■ Method of confirming "Original TX-RX unit" and "Service TX-RX unit"

SUPPLIED ACCESSORIES

ESN Label 1
- KENWOOD ESN
- NXDN ESN
- MPT ESN

Addendum 1

PRINTED CIRCUIT BOARD DATA

The following data is written on the printed circuit board:

Data Type	Description
Firmware	NX-720/820 K type firmware
FPU Data (PC programming mode)	X57-823: NX-720 Kx type data
	X57-824: NX-820 Kx type data
Voice Language	English
Various Adjustment Data (PC Test mode)	General adjustment values for the X57-823 (NX-720), and X57-824 (NX-820).
KENWOOD ESN	Model Name: • 136~174MHz NX-720HGS: X57-8230-12 (for GPS model) NX-720HS: X57-8230-13 • 450~520MHz NX-820HGS: X57-8240-14 (for GPS model) NX-820HS: X57-8240-15 • 400~470MHz NX-820HGS: X57-8240-16 (for GPS model) NX-820HS: X57-8240-17 Type: Kx The same number as the KENWOOD ESN label is written.
NXDN ESN/MPT ESN	The same number as the NXDN ESN/ MPT ESN label is written.

AFTER CHANGING THE PCB

1. After changing the printed circuit board, write the up-to-date Firmware following the instructions in the service manual.
   - Write the Firmware in accordance to the Market. If you write different Market Firmware, there are times communication with the FPU is not possible.
2. Using the KPG-141D, select your desired item (Model Name and Frequency) from the Model > Product Information menu, then use Program > Write Data to the Transceiver to write the FPU data (PC Programming mode). When writing to the transceiver, a Warning Message, corresponding to the item selected, appears. Click [OK] to continue writing the data.
3. Enter Program > Test Mode, then adjust the various adjustment data (PC Test mode) as described in the service manual.
4. Attach the new labels corresponding to the new printed circuit board. (Refer to the images below for label placement.)
5. If necessary, write the FPU data used by the customer with the KPG-141D.

Note:
- When using the ESN Validation function of Trunking, the ESN number changes when the circuit board is changed (the number is written on the circuit board); the Trunking system cannot be accessed. Maintain the ESN data of the Trunking System following the new ESN.
- When a new printed circuit board is used, the KENWOOD ESN changes, as does the Transceiver Information display of the KPG-141D, but this does not have any effect on the operation of the transceiver.
- If changing to the original ESN, please contact our service center.

ATTACHING THE ESN LABEL

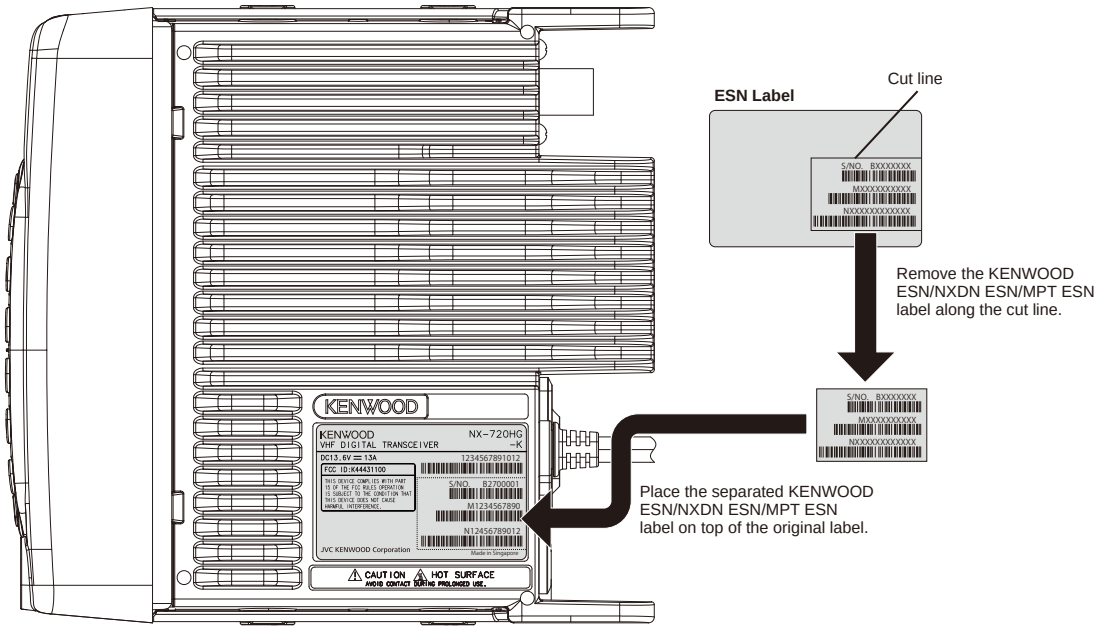

ADJUSTMENT

Controls

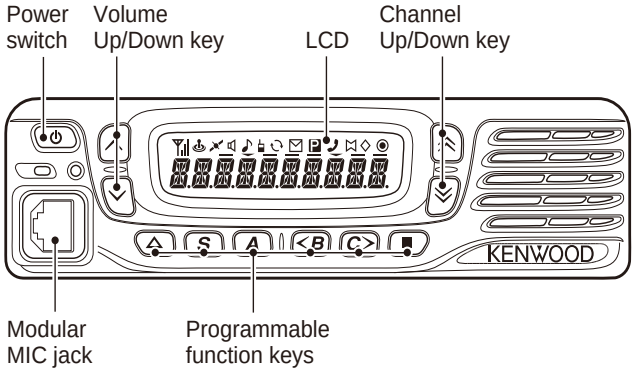

KMC-36 (OPTION)

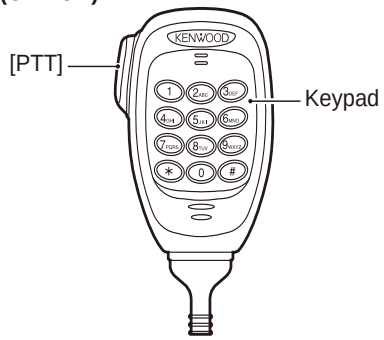

■ Preparations for checking/tuning the transceiver

Before attempting to check/tune the transceiver, connect the unit to a suitable power supply.

Whenever the transmitter is turned on, the unit must be connected to a suitable dummy load (i.e. power meter).

The speaker output connector must be terminated with a 4Ω dummy load and connected to an AC voltmeter and an audio distortion meter or a SINAD measurement meter at all times during checking/tuning.

Panel Test Mode

■ Test mode operation features

This transceiver has a test mode. To enter test mode, press and hold the [A] key while turning the transceiver power ON. Before the transceiver enters test mode, the frequency version information appears on the LCD momentarily. Test mode can be inhibited by programming. To exit test mode, turn the transceiver power OFF. The following functions are available in test mode.

■ Key operation

Key	"—" not appears on the LCD display	
	Function	Display
[⌃]/[⌄]	Test channel up/down	Channel No.
[△]	Push: Squelch level up Hold: Squelch off	Squelch level Squelch off: icon appears
[■]	Wide/Narrow/Very narrow	Wide: "W" Narrow: "N" Very narrow: "V"
[S]	Shift to panel tuning mode	-
[A]	Function on	"—" appears on the LCD display
[<B]	MSK 1200bps and 2400bps	2400bps: icon appears
[C>]	Push: Test signaling up Hold: Test signaling up continuously	Signaling No.
[⌃]/[⌄]	Volume level up/down	
[PTT] (MIC)	Transmit	-
[0] to [9] and [#], [*] (MIC)	Use as the DTMF keypad. If a key is pressed during transmission, the DTMF corresponding to the key that was presses is sent.	-

Key	"—" appears on the LCD display	
	Function	Display
[⌃]	Function off	-
[⌄]	Analog /NXDN	Analog: "A", NXDN: "N"
[△]	Function off	-
[■]	LCD all lights	LCD all point appears
[S]	High /Mid /Low power	High: icon not appears Mid: "—" icon appears Low: "— —" icon appears
[A]	Function off	-
[<B]	Compander on/off	On: icon appears
[C>]	Beat shift on/off	On: ◊ icon appears
[⌃]/[⌄]	Volume level up/down	
[PTT] (MIC)	Transmit	-
[0] to [9] and [#], [*] (MIC)	Function off	-

ADJUSTMENT

• LED indicator

Red LED Lights during transmission.
Green LED Lights when there is carrier.

• LCD display in panel test mode

(Power ON)

Market code

Frequency range
"VHF F1": 136~174MHz

(After 2sec.)

Function

Low power

Mid power

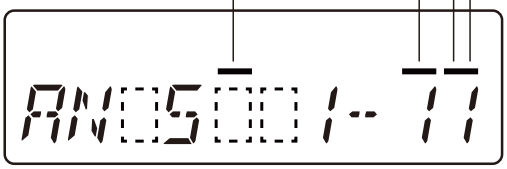

Squelch level

Signaling No.

Channel No.

AW : Analog wide mode
AN : Analog narrow mode
NN : NXDN narrow mode
NV : NXDN very narrow mode

■ Frequency and Signaling

The transceiver has been adjusted for the frequencies shown in the following table. When required, readjust them following the adjustment procedure to obtain the frequencies you want in actual operation.

• Test frequency

CH	RX (MHz)	TX (MHz)
1	155.05000	155.10000
2	136.05000	136.10000
3	173.95000	173.90000
4	155.00000	155.00000
5	155.20000	155.20000
6	155.40000	155.40000
7~16	-	-

• Analog mode signaling

No.	RX	TX
1	None	None
2	None	100Hz Square Wave
3	LTR Data: AREA=0, GOTO=12 HOME=12 ID=47, FREE=25	LTR Data: AREA=0, GOTO=12 HOME=12 ID=47, FREE=25
4	QT: 67.0Hz	QT: 67.0Hz
5	QT: 151.4Hz	QT: 151.4Hz
6	QT: 210.7Hz	QT: 210.7Hz
7	QT: 254.1Hz	QT: 254.1Hz
8	DQT: D023N	DQT: D023N
9	DQT: D754I	DQT: D754I
10	DTMF: 159D	DTMF: 159D
11	None	DTMF Code 9
12	2-tone: A: 304.7Hz, B: 3106.0Hz	2-tone: A: 304.7Hz, B: 3106.0Hz
13	Single Tone: 979.9Hz	Single Tone: 979.9Hz
14	None	Single Tone: 1000Hz
15	None	MSK
16	MSK	MSK

ADJUSTMENT

• NXDN mode signaling

No.	RX	TX
1	RAN1	RAN1
2	None	PN9
3	RAN1	Maximum Deviation Pattern
7	None	FSW+PN9 (PC test mode only)
9	Tone Pattern (1031Hz) (Simple BER Measurement)	Tone Pattern (1031Hz)

RAN: Radio Access Number
PN9: Pseudo-Random Pattern (for production only)
No.9 Item: PC test mode only

Panel Tuning Mode

■ Transceiver tuning (To enter tuning mode)

To enter tuning mode, press the [S] key while the transceiver is in test mode. Use the [<B] key to write tuning data through tuning modes, and the [⩔]/[⩖] to adjust tuning requirements (1 to 4096 appears on the LCD).

Use the [C>] key to select the adjustment item through tuning modes. Use the [A] key to adjust 5 reference level adjustments, and use the [■] key to switch between Wide/Narrow/Very narrow.

• LCD display in panel tuning mode

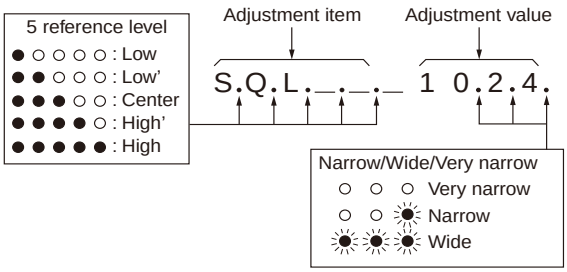

■ Key operation

Key	Function	
	Push	Hold (1 second)
[⩔]/[⩖]	Adjustment value up/down	
[△]	20Hz/2kHz (During transmission in balance adjustment)	-
[■]	Wide/Narrow/Very narrow	-
[S]	Shift to panel test mode	-
[A]	To enter 5 reference level adjustments	-
[<B]	Writes the adjustment value	-
[C>]	Go to next adjustment item	Back to last adjustment item
[∧]/[∨]	Volume level up/down	
[PTT]	Transmit	
[0] to [9] and [#], [*]	-	

■ 5 reference level adjustments frequency

Tuning point	RX (MHz)	TX (MHz)
Low	136.05000	136.10000
Low'	145.55000	145.60000
Center	155.05000	155.10000
High'	164.55000	164.60000
High	173.95000	173.90000

■ 9 reference level adjustments frequency

Tuning point	RX (MHz)	TX (MHz)
Low1	136.05000	136.10000
Low2	140.80000	140.85000
Low3	145.55000	145.60000
Center1	150.30000	150.35000
Center2	155.05000	155.10000
Center3	159.80000	159.85000
High1	164.55000	164.60000
High2	169.30000	169.35000
High3	173.95000	173.90000

ADJUSTMENT

■ Adjustment item supplement

Adjustment Item	Description
Receive Assist	The lock voltage of VCO (Receive) is adjusted. This item must be adjusted before all adjustment items for receiver section are adjusted. This item can be adjusted only in PC Test Mode.
Transmit Assist	The lock voltage of VCO (Transmit) is adjusted. This item must be adjusted before all adjustment items for transmitter section are adjusted. This item can be adjusted only in PC Test Mode.
Frequency	Frequency stability is adjusted under receiving condition with SSG. The SSG needs 0.003ppm accuracy so please use a standard oscillator if necessary. This item can be adjusted only in PC Test Mode so that the adjustment value is not changed easily.
High Transmit Power Limit	High Transmit Power Limit is adjusted.
Mid Transmit Power Limit	Mid Transmit Power Limit is adjusted.
Low Transmit Power Limit	Low Transmit Power Limit is adjusted.
High Transmit Power	High Transmit Power is adjusted.
Mid Transmit Power	Mid Transmit Power is adjusted.
Low Transmit Power	Low Transmit Power is adjusted.
Balance	The transmit audio frequency response is adjusted. This item is adjusted so that the deviation of 2kHz becomes the same deviation of 20Hz. This item must be adjusted before all adjustment items for deviations are adjusted.
Maximum Deviation (NXDN Narrow/Very Narrow)	Maximum Deviation of NXDN (Narrow/Very Narrow) is adjusted.
Maximum Deviation (Analog Wide/Narrow)	Maximum Deviation of Analog (Wide/Narrow) is adjusted. This item must be adjusted before all adjustment items for tone deviations are adjusted. Note: “Maximum Deviation (Analog Narrow)” must be adjusted before “CW ID Deviation (NXDN Very Narrow)” is adjusted.
QT Deviation	QT tone deviation is adjusted.
DQT Deviation	DQT tone deviation is adjusted.
LTR Deviation	LTR tone deviation is adjusted.
DTMF Deviation	DTMF tone deviation is adjusted.
Single Tone Deviation	The deviation of Single Tone used in “2-tone” is adjusted.
MSK Deviation	MSK tone deviation is adjusted.
CW ID Deviation	CW ID tone deviation is adjusted. CW ID is used to inform the others who is transmitting on a 6.25 kHz spacing channel. (In FCC rule, Analog mode or CW ID is required for each channel-spacing.)
Sensitivity 1	Band-Pass Filter is adjusted. The performance of Receive Sensitivity and unwanted signal rejection are improved. This item can be adjusted only in PC Test Mode.
Sensitivity 2	Band-Pass Filter is adjusted. The performance of Receive Sensitivity and unwanted signal rejection are improved. This item can be adjusted only in PC Test Mode.
RSSI Reference	The minimum RSSI level for scan stop is adjusted.
Open Squelch	The squelch level at level “5” is adjusted.
Low RSSI	RSSI display level “▼” is adjusted. Both “Low RSSI” and “High RSSI” must be adjusted. (The curve data of RSSI level is applied.)
High RSSI	
Tight Squelch	The squelch level at level “9” is adjusted.

ADJUSTMENT

■ Adjustment item and Adjustment range

Order	Adjustment item	Panel tuning	PC test	AW (Analog Wide)	AN (Analog Narrow)	NN (NXDN Narrow)	NV (NXDN Very Narrow)	Adjust item Number
				Adjustment range				
1	Receive Assist		✓	9 point ADJ				Common Section 2
				1~4096				
2	Transmit Assist		✓	9 point ADJ				Common Section 3
				1~4096				
3	Frequency		✓	1 point ADJ				Common Section 4
				1~4096				
4	High Transmit Power Limit	✓	✓	-	5	-	-	Transmitter Section 1
				1~256				
5	Mid Transmit Power Limit	✓	✓	-	5	-	-	Transmitter Section 1
				1~256				
6	Low Transmit Power Limit	✓	✓	-	5	-	-	Transmitter Section 1
				1~256				
7	High Transmit Power	✓	✓	-	5	-	-	Transmitter Section 2
				1~1024				
8	Mid Transmit Power	✓	✓	-	5	-	-	Transmitter Section 2
				1~1024				
9	Low Transmit Power	✓	✓	-	5	-	-	Transmitter Section 2
				1~1024				
10	Balance	✓	✓	-	5	-	-	Transmitter Section 2
				1~1024				
11	Maximum Deviation (NXDN)	✓	✓	-	-	5	5	Transmitter Section 4
				1~1024				
12	Maximum Deviation (Analog)	✓	✓	5	5	-	-	Transmitter Section 5
				1~1024				
13	QT Deviation	✓	✓	1	1	-	-	Transmitter Section 6
				1~1024				
14	DQT Deviation	✓	✓	1	1	-	-	Transmitter Section 7
				1~1024				
15	LTR Deviation	✓	✓	1	1	-	-	Transmitter Section 8
				1~1024				
16	DTMF Deviation	✓	✓	1	1	-	-	Transmitter Section 9
				1~1024				
17	Single Tone Deviation	✓	✓	1	1	-	-	Transmitter Section 10
				1~1024				
18	MSK Deviation	✓	✓	1	1	-	-	Transmitter Section 11
				1~1024				
19	CW ID Deviation	✓	✓	-	-	-	1	Transmitter Section 12
				1~1024				
20	Sensitivity 1		✓	-	5	-	-	Receiver Section 2
				1~256				
21	Sensitivity 2		✓	-	5	-	-	Receiver Section 3
				1~256				

ADJUSTMENT

Order	Adjustment item	Panel tuning	PC test	AW (Analog Wide)	AN (Analog Narrow)	NN (NXDN Narrow)	NV (NXDN Very Narrow)	Adjust item Number
				Adjustment range				
22	RSSI Reference	✓	✓	5	5	- *1	5	Receiver Section 4
				1~256				
23	Open Squelch	✓	✓	5	5	- *1	5	Receiver Section 5
				1~256				
24	Low RSSI	✓	✓	5	5	- *1	5	Receiver Section 6
				1~256				
25	High RSSI	✓	✓	5	5	- *1	5	Receiver Section 7
				1~256				
26	Tight Squelch	✓	✓	5	5	-	-	Receiver Section 8
				1~256				

*1: Because NXDN Narrow is adjusted by adjusting Analog Narrow, it is not necessary to adjust NXDN Narrow.

■ Panel tuning mode flow chart

Note: In this Panel tuning mode flow chart, the Adjustment item name is modified.

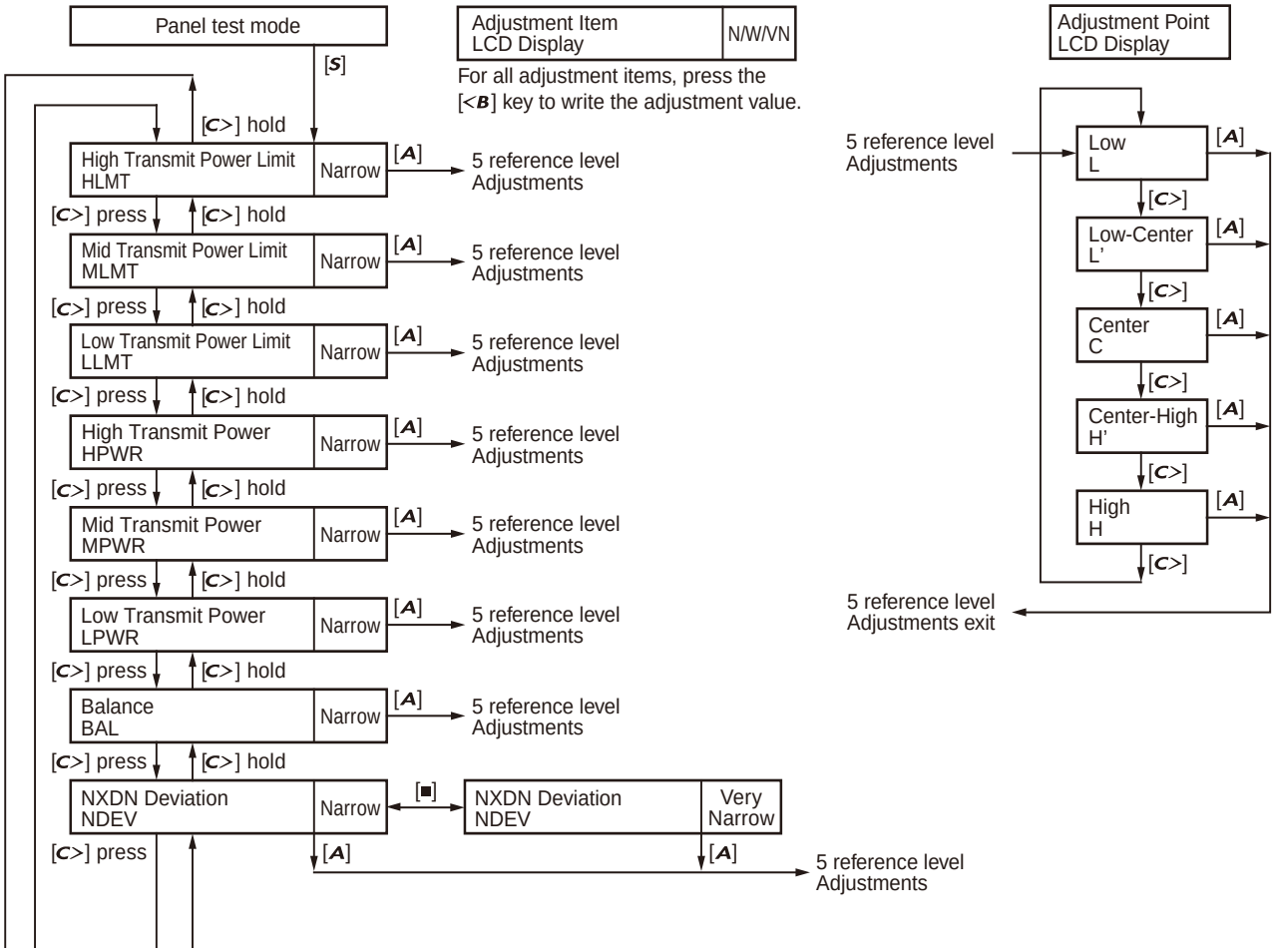

ADJUSTMENT

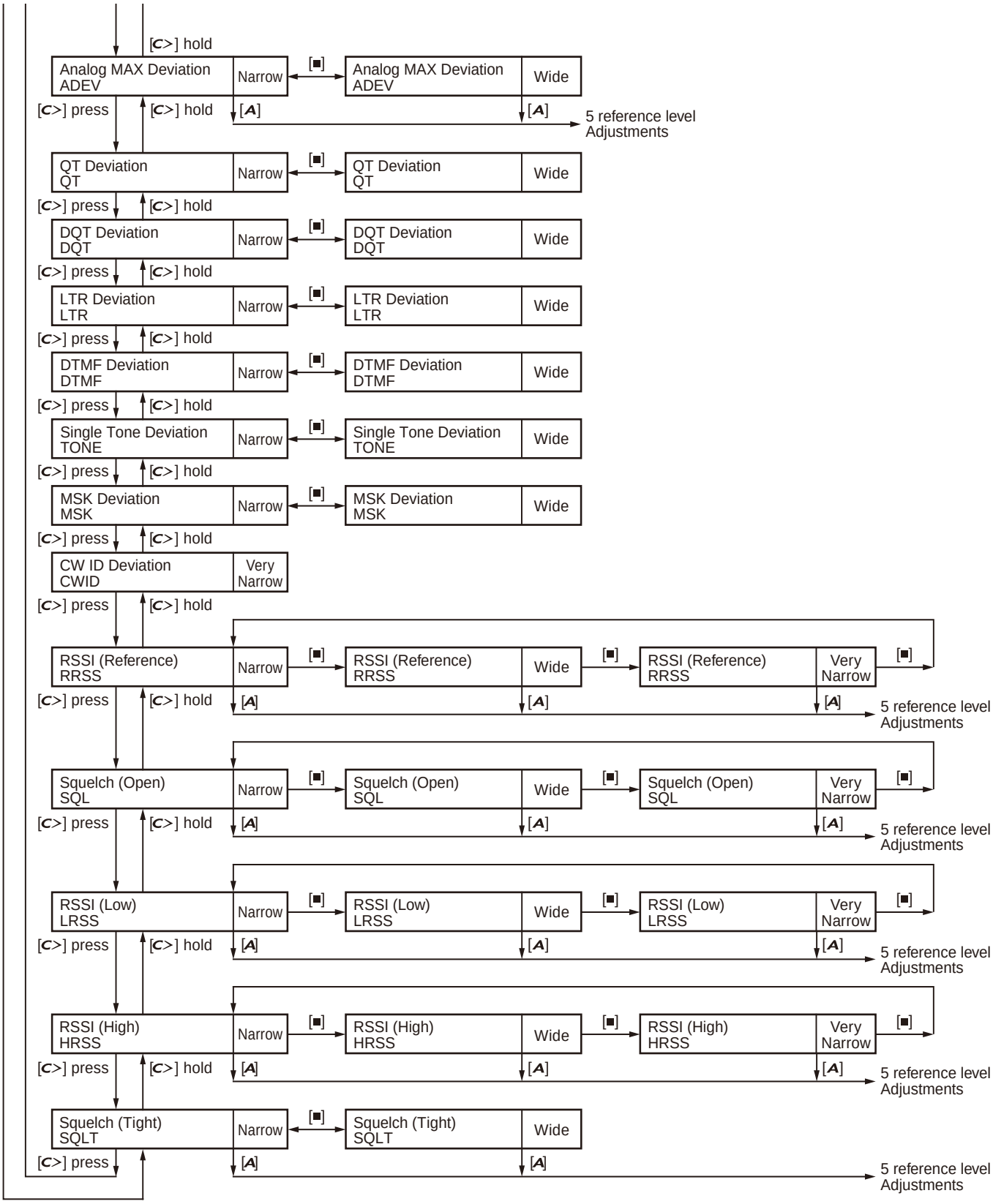
[C>] hold
Analog MAX Deviation ADEV
Narrow
[■]
Analog MAX Deviation ADEV
Wide
[C>] press
[C>] hold
[A]
[A]
5 reference level Adjustments
QT Deviation QT
Narrow
QT Deviation QT
Wide
DQT Deviation DQT
Narrow
DQT Deviation DQT
Wide
LTR Deviation LTR
Narrow
LTR Deviation LTR
Wide
DTMF Deviation DTMF
Narrow
DTMF Deviation DTMF
Wide
Single Tone Deviation TONE
Narrow
Single Tone Deviation TONE
Wide
MSK Deviation MSK
Narrow
MSK Deviation MSK
Wide
CW ID Deviation CWID
Very Narrow
RSSI (Reference) RRSS
Narrow
RSSI (Reference) RRSS
Wide
RSSI (Reference) RRSS
Very Narrow
Squelch (Open) SQL
Narrow
Squelch (Open) SQL
Wide
Squelch (Open) SQL
Very Narrow
RSSI (Low) LRSS
Narrow
RSSI (Low) LRSS
Wide
RSSI (Low) LRSS
Very Narrow
RSSI (High) HRSS
Narrow
RSSI (High) HRSS
Wide
RSSI (High) HRSS
Very Narrow
Squelch (Tight) SQLT
Narrow
Squelch (Tight) SQLT
Wide

ADJUSTMENT

Test Equipment Required for Alignment

Test Equipment	Major Specifications	
1. Standard Signal Generator (SSG)	Frequency Range Modulation Output When performing the Frequency adjustment, the following accuracy is necessary. • 0.003ppm Use a standard oscillator for adjustments, if necessary.	100 to 520MHz Frequency modulation and external modulation –127dBm/0.1µV to greater than –20dBm/22.4mV
2. Power Meter	Input Impedance Operation Frequency Measurement Capability	50Ω 100 to 520MHz Vicinity of 100W
3. Deviation Meter	Frequency Range	100 to 520MHz
4. Digital Volt Meter (DVM)	Measuring Range Input Impedance	10mV to 20V DC High input impedance for minimum circuit loading
5. Oscilloscope		DC through 30MHz
6. High Sensitivity Frequency Counter	Frequency Range Frequency Stability	10Hz to 1000MHz 0.01ppm or less
7. Ammeter		20A or more
8. AF Volt Meter (AF VM)	Frequency Range Voltage Range	50Hz to 10kHz 1mV to 10V
9. Audio Generator (AG)	Frequency Range Output	50Hz to 5kHz or more 0 to 1V
10. Distortion Meter	Capability Input Level	3% or less at 1kHz 50mV to 10Vrms
11. 4Ω Dummy Load		Approx. 4Ω, 10W
12. Regulated Power Supply		13.6V, approx.20A (adjustable from 9V to 17V) Useful if ammeter equipped
13. Spectrum Analyzer	Frequency Range Input Level Input Sensitivity Resolution Bandwidth Video Bandwidth	40MHz to 520MHz Up to +20dBm –100dBm 100Hz 100Hz
14. Tracking Generator	Frequency Range Output Level	40MHz to 520MHz –30dBm to 0dBm

*The test equipment which is not used for adjustment is contained in this table.

■ Test cable for microphone input (E30-3360-28)

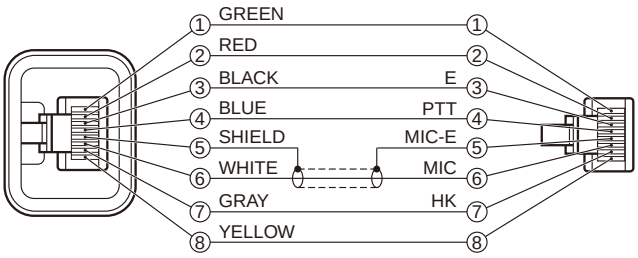

■ MIC connector (Front panel view)

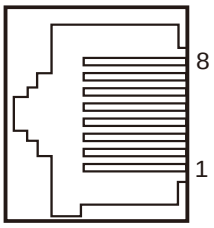

1 : MBL
2 : +B
3 : GND
4 : PTT/TXD (PC serial data from radio)
5 : MICE
6 : MIC
7 : HOOK/RXD (PC serial data to radio)
8 : DM

■ Tuning cable (E30-3383-05 or E30-7754-05)

Adapter cable (E30-3383-05 or E30-7754-05) is required for injecting an audio if PC tuning is used.
See “PC Mode” section for the connection.

Illust is E30-3383-05.

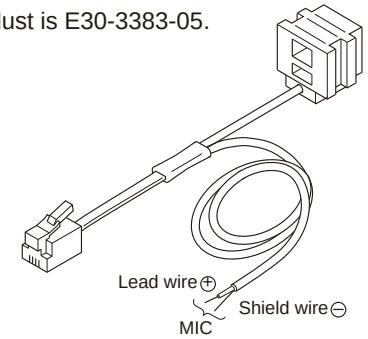

ADJUSTMENT

Radio check Section

Item	Condition		Measurement			Adjustment			Specifications/ Remarks
	Panel test mode	PC test mode	Test-equipment	Unit	Terminal	Unit	Parts	Method	
1. Frequency check	1) CH-Sig : 1-1 PTT: ON	1) Test Channel Channel: 1 Test Signaling Mode: Analog Signaling: 1 PTT: Press [Transmit] button.	f. counter		ANT			Check an internal temperature of radio from 20°C to 26°C.	+/-0.25ppm +/-38.0Hz @155.1MHz
2. High power check	1) CH-Sig : 1-1 PTT: ON	1) Test Channel Channel: 1 Test Signaling Mode: Analog Signaling: 1 PTT: Press [Transmit] button.	Power meter Ammeter		ANT			Check	45.0W~55.0W 13A or less
3. Mid power check	1) CH-Sig : 1-1 PTT: ON	1) Test Channel Channel: 1 Test Signaling Mode: Analog Signaling: 1 PTT: Press [Transmit] button.	Power meter Ammeter					Check	25.0W~35.0W 10A or less
4. Low power check	1) CH-Sig : 1-1 PTT: ON	1) Test Channel Channel: 1 Test Signaling Mode: Analog Signaling: 1 PTT: Press [Transmit] button.	Power meter Ammeter					Check	3.5W~6.5W 7A or less
5. MIC sensitivity check	1) CH-Sig: 1-1 AG: 1kHz PTT: ON	1) Test Channel Channel: 1 Test Signaling Mode: Analog Signaling: 1 AG: 1kHz PTT: Press [Transmit] button.	Deviation meter Oscillo-scope AG AF VM					Adjust AG input to get a standard MOD.	Dev 1.5kHz at 5mV±1.0mV
6. Sensitivity check	1) CH-Sig: 1-1 SSG output Wide: –119dBm (0.25µV) (MOD: 1kHz/±3kHz) Narrow: –119dBm (0.25µV) (MOD: 1kHz/±1.5kHz)	1) Test Channel Channel: 1 Test Signaling Mode: Analog Signaling: 1 SSG output Wide: –119dBm (0.25µV) (MOD: 1kHz/±3kHz) Narrow: –119dBm (0.25µV) (MOD: 1kHz/±1.5kHz)	SSG AF VM Oscillo-scope Distortion meter 4oΩ Dummy load		ANT Ext.SP con-nector			Check	12dB SINAD or more

ADJUSTMENT

Common Section

Item	Condition		Measurement			Adjustment			Specifications/ Remarks
	Panel tuning mode	PC test mode	Test-equipment	Unit	Terminal	Unit	Parts	Method	
1. Setting	1) DC voltage: 13.6V 2) SSG standard modulation [Wide] MOD: 1kHz, DEV: 3kHz [Narrow] MOD: 1kHz, DEV: 1.5kHz								
2. Receive Assist	∗ This adjustment can be performed only PC test mode.	1) Adj item: [Receive Assist] 2) Adj item: [Low1], [Low2], [Low3], [Center1], [Center2], [Center3], [High1], [High2], [High3] Press [Apply All] button to store the adjustment value.					**[PC test mode]** [◀], [▶]	**[PC test mode]** [Automatic Adjustment] Press [Tune Assist Voltage] button. Press [Apply All] button to store the adjustment value after the automatic adjustment has finished. [Manual Adjustment] [V] indicator on the PC window shows VCO lock voltage. Change the adjustment value to get VCO lock voltage within the limit of the specified voltage. **Note:** Confirm the VCO lock voltage approximately 3 seconds after the adjustment value is changed.	2.5V±0.1V **[PC test mode]** Press [Apply All] button to store the adjustment value after all adjustment point was adjusted. **Check!** The assist adjustment value must be between from 50 to 3800.
3. Transmit Assist	∗ This adjustment can be performed only PC test mode.	1) Adj item: [Transmit Assist] 2) Adj item: [Low1], [Low2], [Low3], [Center1], [Center2], [Center3], [High1], [High2], [High3] PTT: Press [Transmit] button. Press [Apply All] button to store the adjustment value.							
4. Frequency	∗ The Frequency adjustment can be performed only in PC test mode.	1) Adj item: [Frequency] SSG output: –20dBm (22.4mV) (CW (without modulation)) **Caution:** Perform the frequency adjustment under the following conditions. • Temperature range of +20°C to +26°C (+68.0°F to +78.8°F). (The temperature is displayed on the Frequency adjustment screen of the KPG-141D and the LCD of the transceiver.) • Use an accuracy of 0.003ppm for the SSG. (Use a standard oscillator if necessary.)	SSG		ANT			**[PC test mode]** Press [Start] button of “Auto Tuning”. Press [Apply] button to store the adjustment value after the automatic adjustment was finished.	**[PC test mode]** The value of “IF20” will become around “0” (Target: ±12digit) after the adjustment was finished. **Remark:** “Frequency” is adjusted under receiving condition with SSG.

ADJUSTMENT

Transmitter Section

Item	Condition		Measurement			Adjustment			Specifications/ Remarks
	Panel tuning mode	PC test mode	Test-equipment	Unit	Terminal	Unit	Parts	Method	
1. High Transmit power Limit	1) Adj item: [HLMT] Adjust: [****] 2) Adj item: [H.LMT_]→ [H.L.MT_]→ [H.L.M.T_]→ [H.L.M.T._]→ [H.L.M.T._.] PTT: ON Press [<B] key to store the adjustment value	1) TEST CH: Low, Low', Center, High', High (5 point) 2) Transmit Press [Apply All] button to store the adjustment value.	Power meter Ammeter		ANT		**[Panel tuning mode]** [⌃], [⌄] **[PC test mode]** [◀], [▶]	53.0W	±2.0W **[PC test mode]** Press [Apply All] button to store the adjustment value after all adjustment point was adjusted.
Mid Transmit power Limit	1) Adj item: [MLMT] Adjust: [****] 2) Adj item: [M.LMT_]→ [M.L.MT_]→ [M.L.M.T_]→ [M.L.M.T._→ [M.L.M.T._.] PTT: ON Press [<B] key to store the adjustment value	1) TEST CH: Low, Low', Center, High', High (5 point) 2) Transmit Press [Apply All] button to store the adjustment value.						33.0W	
Low Transmit power Limit	1) Adj item: [LLMT] Adjust: [****] 2) Adj item: [L.LMT_]→ [L.L.MT_]→ [L.L.M.T_]→ [L.L.M.T._]→ [L.L.M.T._.] PTT: ON Press [<B] key to store the adjustment value	1) TEST CH: Low, Low', Center, High', High (5 point) 2) Transmit Press [Apply All] button to store the-adjustment value.						10.0W	
2. High Transmit Power	1) Adj item: [HPWR] Adjust: [****] 2) Adj item: [H.PWR_]→ [H.P.WR_]→ [H.P.W.R_]→ [H.P.W.R._]→ [H.P.W.R._.] PTT: ON Press [<B] key to store the adjustment value	1) TEST CH: Low, Low', Center, High', High (5 point) 2) Transmit Press [Apply All] button to store the adjustment value.	Power meter Ammeter		ANT		**[Panel tuning mode]** [⌃], [⌄] **[PC test mode]** [◀], [▶]	50.0W	±1.0W 13.0A or less **[PC test mode]** Press [Apply All] button to store the adjustment value after all adjustment point was adjusted.

ADJUSTMENT

Item	Condition		Measurement			Adjustment			Specifications/ Remarks
	Panel tuning mode	PC test mode	Test-equipment	Unit	Terminal	Unit	Parts	Method	
2. Mid Transmit power	1) Adj item: [MPWR] Adjust: [∗∗∗∗] 2) Adj item: [M.PWR_]→ [M.P.WR_]→ [M.P.W.R_]→ [M.P.W.R._]→ [M.P.W.R._.] PTT: ON Press [<B] key to store the adjustment value	1) TEST CH: Low, Low', Center, High', High (5 point) 2) Transmit Press [Apply All] button to store the adjustment value.	Power meter Ammeter		ANT		**[Panel tuning mode]** [⋀⋀], [⋁⋁] **[PC test mode]** [◀], [▶]	30.0W	±1.0W 10.0A or less **[PC test mode]** Press [Apply All] button to store the adjustment value after all adjustment point was adjusted.
Low Transmit power	1) Adj item: [LPWR] Adjust: [∗∗∗∗] 2) Adj item: [L.PWR_]→ [L.P.WR_]→ [L.P.W.R_]→ [L.P.W.R._]→ [L.P.W.R._.] PTT: ON Press [<B] key to store the adjustment value	1) TEST CH: Low, Low', Center, High', High (5 point) 2) Transmit Press [Apply All] button to store the adjustment value.						5.0W	±0.2W 7.0A or less **[PC test mode]** Press [Apply All] button to store the adjustment value after all adjustment point was adjusted.
3. Balance *2	1) Adj item: [BAL] Adjust: [∗∗∗] Deviation meter LPF: 3kHz HPF: OFF 2) Adj item: [B.AL_]→ [B.A.L__]→ [B.A.L.__]→ [B.A.L._._]→ [B.A.L._._.] Adjust: [∗∗∗] PTT: ON Press [<B] key to store the adjustment value.	1) Adj item: [Balance] Deviation meter LPF: 3kHz HPF: OFF 2) Adj item: [Low], [Low'], [Center], [High'], [High] PTT: Press [Transmit] button. Press [Apply All] button to store the adjustment value. [2kHz Sine Wave Check box]: Check while transmitting change to 2kHz.	Deviation meter Oscillo-scope		ANT		**[Panel tuning mode]** [⋀⋀], [⋁⋁] **[PC test mode]** [◀], [▶]	The Deviation of 20Hz frequency is fixed. Change the 2kHz adjustment value to become the same deviation of 20Hz within the specified range.	2kHz Tone deviation is within ±1.0% of 20Hz tone deviation. **[PC test mode]** Press [Apply All] button to store the adjustment value after all adjustment point was adjusted.
*2: Refer to the "Necessary Deviation adjustment item for each signaling and mode" table on page 50. Balance adjustment is common with the adjustment of all signaling deviations.									
4. Maximum Deviation (NXDN) *3 [Narrow]	1) Adj item: [NDEV] Adjust: [∗∗∗∗.] Deviation meter LPF: 3kHz HPF: OFF PTT: ON Press [<B] key to store the adjustment value.	1) Adj item: [Maximum Deviation (NXDN Narrow)] Deviation meter LPF: 3kHz HPF: OFF PTT: Press [Transmit] button. Press [Apply All] button to store the adjustment value.	Deviation meter Oscillo-scope		ANT		**[Panel tuning mode]** [⋀⋀], [⋁⋁] **[PC test mode]** [◀], [▶]	Write Reference value "513" for each adjustment point. Transmit at each adjustment point and check that the Analog deviation is between 2995Hz and 3117Hz.	2995~3117Hz **[PC test mode]** Press [Apply All] button to store the adjustment value after all adjustment point was adjusted.

ADJUSTMENT

Item	Condition		Measurement			Adjustment			Specifications/ Remarks
	Panel tuning mode	PC test mode	Test-equipment	Unit	Terminal	Unit	Parts	Method	
4. Maximum Deviation (NXDN) *3 [Very Narrow]	1) Adj item: [NDEV] Adjust: [****] PTT: ON Press [<B] key to store the adjustment value.	1) Adj item: [Maximum Deviation (NXDN Very Narrow)] PTT: Press [Transmit] button. Press [Apply All] button to store the adjustment value.	Deviation meter Oscillo-scope		ANT		**[Panel tuning mode]** [⌃], [⌄] **[PC test mode]** [◀], [▶]	Write Reference value "513" for each adjustment point. Transmit at each adjustment point and check that the Analog deviation is between 1311Hz and 1363Hz.	1311~1363Hz **[PC test mode]** Press [Apply All] button to store the adjustment value after all adjustment point was adjusted.
5. Maximum Deviation (Analog) *3 [Narrow]	1) Adj item: [ADEV] Adjust: [****.] Deviation meter LPF: 15kHz HPF: OFF PTT: ON Press [<B] key to store the adjustment value.	1) Adj item: [Maximum Deviation (Analog Narrow)] Deviation meter LPF: 15kHz HPF: OFF PTT: Press [Transmit] button. Press [Apply All] button to store the adjustment value.	Deviation meter Oscillo-scope		ANT		**[Panel tuning mode]** [⌃], [⌄] **[PC test mode]** [◀], [▶]	Write Reference value "513" for each adjustment point. Transmit at each adjustment point and check that the Analog deviation is between 2050Hz and 2150Hz.	2050~2150Hz **[PC test mode]** Press [Apply All] button to store the adjustment value after all adjustment point was adjusted.
[Wide]	1) Adj item: [ADEV] Adjust: [**.*.*.] PTT: ON Press [<B] key to store the adjustment value.	1) Adj item: [Maximum Deviation (Analog Wide)] PTT: Press [Transmit] button. Press [Apply All] button to store the adjustment value.						Write Reference value "513" for each adjustment point. Transmit at each adjustment point and check that the Analog deviation is between 4150Hz and 4250Hz.	4150~4250Hz **[PC test mode]** Press [Apply All] button to store the adjustment value after all adjustment point was adjusted.
*3: Refer to the "Necessary Deviation adjustment item for each signaling and mode" table on page 50. Regarding Maximum Deviation (Analog), it is common with the adjustment of all analog signalings.									
6. QT Deviation *4 [Narrow]	1) Adj item: [QT] Adjust: [****.] Deviation meter LPF: 3kHz HPF: OFF PTT: ON Press [<B] key to store the adjustment value.	1) Adj item: [QT Deviation (Analog Narrow)] Deviation meter LPF: 3kHz HPF: OFF PTT: Press [Transmit] button. Press [Apply] button to store the adjustment value.	Deviation meter Oscillo-scope		ANT		**[Panel tuning mode]** [⌃], [⌄] **[PC test mode]** [◀], [▶]	Write the value 513 (Reference value)	0.35kHz±0.05kHz
[Wide]	1) Adj item: [QT] Adjust: [**.*.*.] PTT: ON Press [<B] key to store the adjustment value.	1) Adj item: [QT Deviation (Analog Wide)] PTT: Press [Transmit] button. Press [Apply] button to store the adjustment value.						Write the value 513 (Reference value)	0.75kHz±0.05kHz

ADJUSTMENT

Item	Condition		Measurement			Adjustment			Specifications/ Remarks
	Panel tuning mode	PC test mode	Test-equipment	Unit	Terminal	Unit	Parts	Method	
7. DQT Deviation *4 [Narrow]	1) Adj item: [DQT] Adjust: [****.] Deviation meter LPF: 3kHz HPF: OFF PTT: ON Press [<B] key to store the adjustment value.	1) Adj item: [DQT Deviation (Analog Narrow)] Deviation meter LPF: 3kHz HPF: OFF PTT: Press [Transmit] button. Press [Apply] button to store the adjustment value.	Deviation meter Oscillo-scope		ANT		**[Panel tuning mode]** [⋀⋀], [⋁⋁] **[PC test mode]** [◀], [▶]	Write the value 430 (Reference value)	0.35kHz±0.05kHz
[Wide]	1) Adj item: [DQT] Adjust: [**.*.*.] PTT: ON Press <B] key to store the adjustment value.	1) Adj item: [DQT Deviation (Analog Wide)] PTT: Press [Transmit] button. Press [Apply] button to store the adjustment value.						Write the value 430 (Reference value)	0.75kHz±0.05kHz
8. LTR Deviation *4 [Narrow]	1) Adj item: [LTR] Adjust: [****.] Deviation meter LPF: 3kHz HPF: OFF PTT: ON Press [<B] key to store the adjustment value.	1) Adj item: [LTR Deviation (Analog Narrow)] Deviation meter LPF: 3kHz HPF: OFF PTT: Press [Transmit] button. Press [Apply] button to store the adjustment value.	Deviation meter Oscillo-scope		ANT		**[Panel tuning mode]** [⋀⋀], [⋁⋁] **[PC test mode]** [◀], [▶]	Write the value 465 (Reference value)	0.75kHz±0.05kHz
[Wide]	1) Adj item: [LTR] Adjust: [**.*.*.] PTT: ON Press [<B] key to store the adjustment value.	1) Adj item: [LTR Deviation (Analog Wide)] PTT: Press [Transmit] button. Press [Apply] button to store the adjustment value.						Write the value 465 (Reference value)	1.00kHz±0.05kHz
9. DTMF Deviation *4 [Narrow]	1) Adj item: [DTMF] Adjust: [****.] Deviation meter LPF: 15kHz HPF: OFF PTT: ON Press [<B] key to store the adjustment value.	1) Adj item: [DTMF Deviation (Analog Narrow)] Deviation meter LPF: 15kHz HPF: OFF PTT: Press [Transmit] button. Press [Apply] button to store the adjustment value.	Deviation meter Oscillo-scope		ANT		**[Panel tuning mode]** [⋀⋀], [⋁⋁] **[PC test mode]** [◀], [▶]	Write the value 648 (Reference value)	1.5kHz±0.05kHz
[Wide]	1) Adj item: [DTMF] Adjust: [**.*.*.] PTT: ON Press [<B] key to store the adjustment value.	1) Adj item: [DTMF Deviation (Analog Wide)] PTT: Press [Transmit] button. Press [Apply] button to store the adjustment value.						Write the value 648 (Reference value)	3.0kHz±0.05kHz

ADJUSTMENT

Item	Condition		Measurement			Adjustment			Specifications/ Remarks
	Panel tuning mode	PC test mode	Test-equipment	Unit	Terminal	Unit	Parts	Method	
10. Single TONE Deviation *4 [Narrow]	1) Adj item: [TONE] Adjust: [****.] Deviation meter LPF: 15kHz HPF: OFF PTT: ON Press [<B] key to store the adjustment value.	1) Adj item: [Single Tone Deviation (Analog Narrow)] Deviation meter LPF: 15kHz HPF: OFF PTT: Press [Transmit] button. Press [Apply] button to store the adjustment value.	Deviation meter Oscillo-scope		ANT		**[Panel tuning mode]** [⋀⋁], [⋁] **[PC test mode]** [◀], [▶]	Write the value 513 (Reference value)	1.50kHz±0.05kHz
[Wide]	1) Adj item: [TONE] Adjust: [**.*.*.] PTT: ON Press [<B] key to store the adjustment value.	1) Adj item: [Single Tone Deviation (Analog Wide)] PTT: Press [Transmit] button. Press [Apply] button to store the adjustment value.						Write the value 513 (Reference value)	3.00kHz±0.05kHz
11. MSK Deviation *4 [Narrow]	1) Adj item: [MSK] Adjust: [****.] Deviation meter LPF: 15kHz HPF: OFF PTT: ON Press [<B] key to store the adjustment value.	1) Adj item: [MSK Deviation (Analog Narrow] Deviation meter LPF: 15kHz HPF: OFF PTT: Press [Transmit] button. Press [Apply] button to store the adjustment value.	Deviation meter Oscillo-scope		ANT		**Panel tuning mode]** [⋀⋁], [⋁] **[PC test mode]** [◀], [▶]	Write the value 513 (Reference value)	1.50kHz±0.05kHz
[Wide]	1) Adj item: [MSK] Adjust: [**.*.*.] PTT: ON Press [<B] key to store the adjustment value.	1) Adj item: [MSK Deviation (Analog Wide)] PTT: Press [Transmit] button. Press [Apply] button to store the adjustment value.						Write the value 513 (Reference value)	3.00kHz±0.05kHz
12. CW ID Deviation *4 [Very Narrow]	1) Adj item: [CWID] Adjust: [****] Deviation meter LPF: 15kHz HPF: OFF PTT: ON Press [<B] key to store the adjustment value.	1) Adj item: [CW ID Deviation (NXDN Very Narrow)] Deviation meter LPF: 15kHz HPF: OFF PTT: Press [Transmit] button. Press [Apply] button to store the adjustment value.	Deviation meter Oscillo-scope		ANT		**Panel tuning mode]** [⋀⋁], [⋁] **[PC test mode]** [◀], [▶]	Write the value 376 (Reference value)	1.00kHz±0.10kHz

*4: Refer to the “Necessary Deviation adjustment item for each signaling and mode” table on page 50.

■ **Necessary Deviation adjustment item for each signaling and mode**

The following shows the necessary adjustment items for each signaling deviation. Please read the following table like the following example. In the case of the signaling “QT (Wide)”, this signaling is composed of three elements [Balance, Maximum Deviation (Analog Wide) and QT Deviation (Wide)]. Please adjust Balance and Maximum Deviation (Analog Wide) before adjusting QT Deviation (Wide).

Mode	Signaling	Necessary adjustment and order		
		Wide	Narrow	Very Narrow
Analog	Audio	1. Balance adjust 2. Maximum Deviation (Analog Wide)	1. Balance adjust 2. Maximum Deviation (Analog Narrow)	-
	QT	1. Balance adjust 2. Maximum Deviation (Analog Wide) 3. QT Deviation (Wide)	1. Balance adjust 2. Maximum Deviation (Analog Narrow) 3. QT Deviation (Narrow)	-
	DQT	1. Balance adjust 2. Maximum Deviation (Analog Wide) 3. DQT Deviation (Wide)	1. Balance adjust 2. Maximum Deviation (Analog Narrow) 3. DQT Deviation (Narrow)	-
	LTR	1. Balance adjust 2. Maximum Deviation (Analog Wide) 3. LTR Deviation (Wide)	1. Balance adjust 2. Maximum Deviation (Analog Narrow) 3. LTR Deviation (Narrow)	-
	DTMF	1. Balance adjust 2. Maximum Deviation (Analog Wide) 3. DTMF Deviation (Wide)	1. Balance adjust 2. Maximum Deviation (Analog Narrow) 3. DTMF Deviation (Narrow)	-
	2TONE	1. Balance adjust 2. Maximum Deviation (Analog Wide) 3. Single TONE Deviation (Analog Wide)	1. Balance adjust 2. Maximum Deviation (Analog Narrow) 3. Single TONE Deviation (Analog Narrow)	-
	MSK (FleetSync)	1. Balance adjust 2. Maximum Deviation (Analog Wide) 3. MSK Deviation (Analog Wide)	1. Balance adjust 2. Maximum Deviation (Analog Narrow) 3. MSK Deviation (Analog Narrow)	-
NXDN	Audio	-	1. Balance adjust 2. Maximum Deviation (NXDN Narrow)	1. Balance adjust 2. Maximum Deviation (NXDN Very Narrow)
	CW ID	-	-	1. Balance adjust 2. Maximum Deviation (Analog Narrow) 3. CW ID Deviation (NXDN Very Narrow)

ADJUSTMENT

Receiver Section

Item	Condition		Measurement			Adjustment			Specifications/ Remarks
	Panel tuning mode	PC test mode	Test-equipment	Unit	Terminal	Unit	Parts	Method	
1. AF level setting	**[Panel test mode]** 1) CH-Sig: 1-1 SSG output: –47dBm (1mV) (MOD: 1kHz/±1.5kHz) Wide/Narrow: Narrow Beat Shift: Uncheck Compander: Uncheck	1) Test Channel Channel: 1 Test Signaling Mode: Analog Signaling: 1 Wide/Narrow: Narrow Beat Shift: Uncheck Compander: Uncheck SSG output: –47dBm (1mV) (MOD: 1kHz/±1.5kHz)	SSG DVM AF VM 4Ω Dummy load Oscillo-scope		ANT Ext.SP con-nector		**[Panel tuning mode]** [∧], [∨] **[PC test mode]** [◀], [▶]	Volume Up/Down Key to obtain 2.83V AF output. (2.0W @ 4Ω load)	2.83V±0.3V (Volume Button in PC test mode screen)
2. Sensitivity 1	∗ This adjustment can be performed only PC test mode.	1) Adj item: [Sensitivity 1] 2) Adj item: [Low], [Low'], [Center], [High'], [High] Press [Apply All] button to store the adjustment value.	SSG AF VM 4Ω Dummy load Distortion meter Oscillo-scope		ANT Ext.SP con-nector		**[PC test mode]** [◀], [▶]	Write the value as followings, [Low]: 61 (Preset) [Low']: 85 (Preset) [Center]: 103 (Pre-set) [High']: 122 (Pre-set) [High]: 152 (Pre-set)	Increase the adjust-ment value from the preset value to get 12dB SINAD. SSG output: -119dBm (0.25uV) (Mod: 1kHz/±1.5kHz) **Note:** The fixed value of Sensitivity 2 must be written before adjust-ing Sensitivity 1.
3. Sensitivity 2	∗ This adjustment can be performed only PC test mode.	1) Adj item: [Sensitivity 2] 2) Adj item: [Low], [Low'], [Center], [High'], [High] Press [Apply All] button to store the adjustment value.	SSG AF VM 4Ω Dummy load Distortion meter Oscillo-scope		ANT Ext.SP con-nector		**[PC test mode]** [◀], [▶]	Write the value as followings, [Low]: 48 (Fixed) [Low']: 75 (Fixed) [Center]: 104 (Fixed) [High']: 132 (Fixed) [High]: 187 (Fixed)	

ADJUSTMENT

Item	Condition		Measurement			Adjustment			Specifications/ Remarks
	Panel tuning mode	PC test mode	Test-equipment	Unit	Terminal	Unit	Parts	Method	
4. RSSI reference *5 [Analog Narrow]	1) Adj item: [RRSS] Adjust: [∗∗∗.] 2) Adj item: [R.RSS]→ [R.R.SS]→ [R.R.S.S]→ [R.R.S.S.]→ [R.R.S.S._.] SSG output: 12dB SINAD level -3dB (MOD: 1kHz/±1.5kHz)	1) Adj item: [RSSI Reference (Analog Narrow)] 2) Adj item: [Low], [Low'], [Center], [High'], [High] SSG output: 12dB SINAD level –3dB (MOD: 1kHz/±1.5kHz)	SSG AF VM 4Ω Dummy load Distortion meter Oscillo-scope		ANT Ext.SP con-nector			**[Panel tuning mode]** After input signal from SSG, press [<*B*] key to store the adjustment value. **[PC test mode]** After input signal from SSG, press [Apply] button to store the adjust-ment value.	
[Analog Wide]	1) Adj item: [RRSS] Adjust: [∗.∗.∗.] 2) Adj item: [R.RSS]→ [R.R.SS]→ [R.R.S.S]→ [R.R.S.S.]→ [R.R.S.S._.] SSG output: 12dB SINAD level -3dB (MOD: 1kHz/±3kHz)	1) Adj item: [RSSI Reference (Analog Wide)] 2) Adj item: [Low], [Low'], [Center], [High'], [High] SSG output: 12dB SINAD level –3dB (MOD: 1kHz/±3kHz)							
[NXDN Very Narrow]	1) Adj item: [RRSS] Adjust: [∗∗∗] 2) Adj item: [R.RSS]→ [R.R.SS]→ [R.R.S.S]→ [R.R.S.S.→ [R.R.S.S._.] SSG output: 12dB SINAD level for Analog Narrow -3dB (MOD: 1kHz/±1.5kHz)	1) Adj item: [RSSI Reference (NXDN Very Nar-row)] 2) Adj item: [Low], [Low'], [Center], [High'], [High] SSG output: 12dB SINAD level for Analog Narrow –3dB (MOD: 1kHz/±1.5kHz)							Adjust with the ana-log signal.
*5: Because RSSI Reference (NXDN Narrow) is adjusted by adjusting RSSI Reference (Analog Narrow), it is not necessary to adjust RSSI Refer-ence (NXDN Narrow).									
5. Open Squelch *6 (Squelch level 5) [Analog Narrow]	1) Adj item: [SQL] Adjust: [∗∗∗.] 2) Adj item: [S.QL]→ [S.Q.L]→ [S.Q.L.]→ [S.Q.L._.]→ [S.Q.L._. _.] SSG output: 12dB SINAD level (MOD: 1kHz/±1.5kHz)	1) Adj item: [Open Squelch (Analog Narrow)] 2) Adj item: [Low], [Low'], [Center], [High'], [High] SSG output: 12dB SINAD level (MOD: 1kHz/±1.5kHz)	SSG AF VM 4Ω Dummy load Distortion meter Oscillo-scope		ANT Ext.SP con-nector			**[Panel tuning mode]** After input signal from SSG, press [<*B*] key to store the adjustment value. **[PC test mode]** After input signal from SSG, press [Apply] button to store the adjust-ment value.	"Open Squelch" will not be adjusted correctly if MOD and Deviation are wrong. **Remark:** During production, a fixed value is written. 138 (Fixed)

ADJUSTMENT

Item	Condition		Measurement			Adjustment			Specifications/ Remarks
	Panel tuning mode	PC test mode	Test-equipment	Unit	Terminal	Unit	Parts	Method	
5. Open Squelch *6 (Squelch level 5) [Analog Wide]	1) Adj item: [SQL] Adjust: [∗.∗.∗.] 2) Adj item: [S.QL]→ [S.Q.L]→ [S.Q.L.]→ [S.Q.L._.]→ [S.Q.L._. _.] SSG output: 12dB SINAD level (MOD: 1kHz/±3kHz)	1) Adj item: [Open Squelch (Analog Wide)] 2) Adj item: [Low], [Low'], [Center], [High'], [High] SSG output: 12dB SINAD level (MOD: 1kHz/±3kHz)	SSG AF VM 4Ω Dummy load Distortion meter Oscillo-scope		ANT Ext.SP con-nector			**[Panel tuning mode]** After input signal from SSG, press [<*B*] key to store the adjustment value. **[PC test mode]** After input signal from SSG, press [Apply] button to store the adjust-ment value.	"Open Squelch" will not be adjusted correctly if MOD and Deviation are wrong. **Remark:** During production, a fixed value is written. 138 (Fixed)
[NXDN Very Narrow]	1) Adj item: [SQL] Adjust: [∗∗∗] 2) Adj item: [S.QL]→ [S.Q.L]→ [S.Q.L.]→ [S.Q.L._.]→ [S.Q.L._. _.] SSG output: 12dB SINAD level for Analog Narrow -4dB (MOD: 400Hz/±1.1kHz)	1) Adj item: [Open Squelch (NXDN Very Nar-row)] 2) Adj item: [Low],[Low'], [Cen-ter], [High'], [High] SSG output: 12dB SINAD level for Analog Narrow -4dB (MOD: 400Hz/±1.1kHz)							Adjust with the ana-log signal. This item is adjusted under the condition that MOD is "400Hz" and Deviation is "±1.1kHz" due to the circuit configuration. **Remark:** During production, a fixed value is written. 171 (Fixed)
*6: Because Open squelch (NXDN Narrow) is adjusted by adjusting Open squelch (Analog Narrow), it is not necessary to adjust Open squelch (NXDN Narrow).									
6. Low RSSI at -118dBm *7 [Analog Narrow]	1) Adj item: [LRSS] Adjust: [∗∗∗.] 2) Adj item: [L.RSS]→ [L.R.SS]→ [L.R.S.S]→ [L.R.S.S.]→ [L.R.S.S._.] SSG output: -118dBm (0.28uV) (MOD: 1kHz/±1.5kHz)	1) Adj item: [Low RSSI (Analog Narrow)] 2) Adj item: [Low], [Low'], [Center], [High'], [High] SSG output: –118dBm (0.28µV) (MOD: 1kHz/±1.5kHz)	SSG		ANT Ext.SP con-nector			**[Panel tuning mode** After input signal from SSG, press [<*B*] key to store the adjustment value. **[PC test mode]** After input signal from SSG, press [Apply] button to store the adjustment value.	
[Analog Wide]	1) Adj item: [LRSS] Adjust: [∗.∗.∗.] 2) Adj item: [L.RSS]→ [L.R.SS]→ [L.R.S.S]→ [L.R.S.S.]→ [L.R.S.S._.] SSG output: -118dBm (0.28uV) (MOD: 1kHz/±3kHz)	1) Adj item: [Low RSSI (Analog Wide)] 2) Adj item: [Low], [Low'], [Center], [High'], [High] SSG output: –118dBm (0.28µV) (MOD: 1kHz/±3kHz)							

ADJUSTMENT

Item	Condition		Measurement			Adjustment			Specifications/ Remarks
	Panel tuning mode	PC test mode	Test-equipment	Unit	Terminal	Unit	Parts	Method	
6. Low RSSI at -118dBm *7 [NXDN Very Narrow]	1) Adj item: [LRSS] Adjust: [∗∗∗] 2) Adj item: [L.RSS]→ [L.R.SS]→ [L.R.S.S]→ [L.R.S.S.]→ [L.R.S.S._.] SSG output: -118dBm (0.28uV) (MOD: 1kHz/±1.5kHz)	1) Adj item: [Low RSSI (NXDN Very Narrow)] 2) Adj item: [Low], [Low'], [Center], [High'], [High] SSG output: –118dBm (0.28µV) (MOD: 1kHz/±1.5kHz)	SSG		ANT Ext.SP con-nector			**[Panel tuning mode]** After input signal from SSG, press [<*B*] key to store the adjustment value. **[PC test mode]** After input signal from SSG, press [Apply] button to store the adjustment value.	Adjust with the ana-log signal.
*7: Because Low RSSI at –118dBm (NXDN Narrow) is adjusted by adjusting Low RSSI at –118dBm (Analog Narrow), it is not necessary to adjust Low RSSI at –118dBm (NXDN Narrow).									
7. High RSSI at -80dBm *8 [Analog Narrow]	1) Adj item: [HRSS] Adjust: [∗∗∗.] 2) Adj item: [H.RSS]→ [H.R.SS]→ [H.R.S.S]→ [H.R.S.S.]→ [H.R.S.S._.] SSG output: -80dBm (22.4uV) (MOD: 1kHz/±1.5kHz)	1) Adj item: [High RSSI (Analog Narrow)] 2) Adj item: [Low], [Low'], [Center], [High'], [High] SSG output: –80dBm (22.4µV) (MOD: 1kHz/±1.5kHz)	SSG		ANT Ext.SP con-nector			**[Panel tuning mode]** After input signal from SSG, press [<*B*] key to store the adjustment value. **[PC test mode]** After input signal from SSG, press [Apply] button to store the adjust-ment value.	
[Analog Wide]	1) Adj item: [HRSS] Adjust: [∗.∗.∗.] 2) Adj item: [H.RSS]→ [H.R.SS]→ [H.R.S.S]→ [H.R.S.S.]→ [H.R.S.S._.] SSG output : -80dBm (22.4uV) (MOD: 1kHz/±3kHz)	1) Adj item: [High RSSI (Analog Wide)] 2) Adj item: [Low], [Low'], [Center], [High'], [High] SSG output: –80dBm (22.4µV) (MOD: 1kHz/±3kHz)							
[NXDN Very Narrow]	1) Adj item: [HRSS] Adjust: [∗∗∗] 2) Adj item: [H.RSS]→ [H.R.SS]→ [H.R.S.S]→ [H.R.S.S.]→ [H.R.S.S._.] SSG output : -80dBm (22.4uV) (MOD: 1kHz/±1.5kHz)	1) Adj item: [High RSSI (NXDN Very Narrow)] 2) Adj item: [Low], [Low'], [Center], [High'], [High] SSG output: –80dBm (22.4µV) (MOD: 1kHz/±1.5kHz)							Adjust with the ana-log signal.
*8: Because "RSSI at –80dBm adjust" of NXDN Narrow is adjusted by adjusting "RSSI at –80dBm adjust [Analog Narrow]", it is not necessary to adjust "RSSI at –80dBm adjust" of NXDN Narrow.									

ADJUSTMENT

Item	Condition		Measurement			Adjustment			Specifications/ Remarks
	Panel tuning mode	PC test mode	Test-equipment	Unit	Terminal	Unit	Parts	Method	
8. Squelch (Tight) [Analog Narrow]	1) Adj item: [SQLT] Adjust: [∗∗∗.] 2) Adj item: [S.QLT]→ [S.Q.LT]→ [S.Q.L.T]→ [S.Q.L.T.]→ [S.Q.L.T. _.] SSG output: 12dB SINAD level + 4dB (MOD: 1kHz/±1.5kHz)	1) Adj item: [Tight Squelch (Analog Narrow)] 2) Adj item: [Low], [Low'], [Center], [High'], [High] SSG output: 12dB SINAD level + 4dB (MOD: 1kHz/±1.5kHz)	SSG AF VM 4Ω Dummy load Distortion meter Oscillo-scope		ANT Ext.SP con-nector			**[Panel tuning mode]** After input signal from SSG, press [<*B*] key to store the adjustment value. **[PC test mode]** After input signal from SSG, press [Apply] button to store the adjust-ment value.	"Squelch (Tight)" will not be adjusted correctly if MOD or Deviation is wrong. **Remark:** During production, a fixed value is written. ·Analog Narrow [S.QLT]→ 248 [S.Q.LT]→ 248 [S.Q.L.T]→ 248 [S.Q.L.T.]→ 248 [S.Q.L.T._.]→ 248 ·Analog Wide [S.QLT]→ 255 [S.Q.LT]→ 255 [S.Q.L.T]→ 255 [S.Q.L.T.]→ 255 [S.Q.L.T._.]→ 255
[Analog Wide]	1) Adj item: [SQLT] Adjust: [∗.∗.∗.] 2) Adj item: [S.QLT]→ [S.Q.LT]→ [S.Q.L.T]→ [S.Q.L.T.]→ [S.Q.L.T. _.] SSG output: 12dB SINAD level + 4dB (MOD: 1kHz/±3kHz)	1) Adj item: [Tight Squelch (Analog Wide)] 2) Adj item: [Low], [Low'], [Center], [High'], [High] SSG output: 12dB SINAD level + 4dB (MOD: 1kHz/±3kHz)							

TERMINAL FUNCTION

Display unit (X54-3830-10)

Pin No.	Name	I/O	Function
CN1 (to TX-RX unit CN514)			
1	SB	I	Battery voltage DC supply
2	SB	I	Battery voltage DC supply
3	SP–	I	Speaker input –
4	SP–	I	Speaker input –
5	SP+	I	Speaker input +
6	SP+	I	Speaker input +
7	BLC	I	LCD backlight control signal input
8	MBL	I	MIC backlight control signal input
9	RLED	I	Red LED control signal input
10	GLED	I	Green LED control signal input
11	BLED	I	Blue LED control signal input
12	GND	-	Ground
13	GND	-	Ground
14	GND	-	Ground
15	EMG	O	Emergency key detection
16	GND	-	Ground
17	NC	-	No connection
18	50C	I	5V DC power supply
19	LCDDI	I	LCD data input
20	LCDCE	I	LCD enable input
21	LCDCL	I	LCD clock input
22	LCDDO	O	LCD data output
23	GND	-	Ground
24	GND	-	Ground
25	MIC	O	MIC signal output
26	ME	-	MIC ground
27	HOOK/RXD	O	HOOK/PC serial data
28	PTT/TXD	I/O	PTT/PC serial data
29	MKEY	I/O	MIC data detection
30	POWER	O	Detection output of power switch
J1 (MIC jack)			
1	MBL	O	MIC backlight control
2	SB	O	Battery voltage DC supply
3	GND	-	Ground
4	PTT	I/O	PTT/ PC serial data from radio
5	ME	-	MIC ground
6	MIC	I	MIC signal input
7	HOOK	I	HOOK/ PC serial data to radio
8	DM	I/O	MIC data detection

TX-RX unit (X57-8230-1X)

Pin No.	Name	I/O	Function
CN514 (to Display unit CN1)			
1	SB	O	Battery voltage DC supply
2	SB	O	Battery voltage DC supply
3	SP–	O	Speaker output –
4	SP–	O	Speaker output –
5	SP+	O	Speaker output +
6	SP+	O	Speaker output +
7	BLC	O	LCD backlight control signal output
8	MBL	O	MIC backlight control signal output
9	RLED	O	Red LED control signal output
10	GLED	O	Green LED control signal output
11	BLED	O	Blue LED control signal output
12	GND	-	Ground
13	GND	-	Ground
14	GND	-	Ground
15	EMG	I	Emergency key detection
16	GND	-	Ground
17	NC	-	No connection
18	50C	O	5V DC power supply
19	LCDDI	O	LCD data output
20	LCDCE	O	LCD enable output
21	LCDCL	O	LCD clock output
22	LCDDO	I	LCD data input
23	GND	-	Ground
24	GND	-	Ground
25	MIC	I	MIC signal input
26	ME	-	MIC ground
27	HOOK/ RXD	I	HOOK/PC serial data
28	PTT/TXD	I/O	PTT/PC serial data
29	MKEY	I/O	MIC data detection
30	POWER	I	Detection input of power switch

TERMINAL FUNCTION

8pin Modular Connector Specification

Pin No.	Pin Name	I/O	Signal Type	Description/port type	Item and Condition	Min	Typ	Max	Unit	Note
1	MBL	O	Digital	CMOS output	VOH	4.2		5.2	V	
					VOL	-		0.8	V	
2	SB	O	Power	Switched B output	Output Voltage	This parameter depends on Battery voltage.				
					Output Current			200	mA	
3	GND	-	GND	Ground	Allowable Current Value			200	mA	
4	PTT	I	Digital	CMOS input (Pull Up: 5.0V/10kΩ)	VIH	4.2		5.0	V	
					VIL	0		0.8	V	
	TXD	O	Digital	CMOS 3-State Buffer output (Pull Up: 5.0V/10kΩ)	VOH	4.2		5.2	V	
					VOL	-		0.8	V	
					Baud Rate	-		19200	bps	
5	ME	-	GND	MIC Ground	MIC Ground	This is ground port for Microphone.				
6	MIC	I	Analog	Audio input	Output Amplitude (1kHz, 60% Deviation)	-	5	-	mVrms	
					Coupling Capacitor	-	10	-	uF	
					Input Impedance	-	600	-	Ω	
					Allowable Frequency	300		3000	Hz	
7	HOOK/ RXD	I	Digital	DTC144EE input (Pull Up: 5.0V/4.7kΩ)	VIH	4.2		5.0	V	
					VIL	0		0.8	V	
					Baud Rate	-		115200	bps	
8	DM	I	Digital	CMOS input/output (Pull Up: 5.0V/47kΩ)	VIH	4.2		5.0	V	
					VIL	0		0.8	V	
		O	Digital		VOL	-		0.8	V	

15pin D-sub Connector Specification

Pin No.	Pin Name	I/O	Signal Type	Description	Item and Condition	Min	Typ	Max	Unit	Note
1	SB	-	Power	Switched B output	Voltage	This parameter depends on Battery voltage.				
					Supply Current	-	-	2.0	A	
					(with KCT-60)	-	-	0.5	A	
2	IGN	I	Digital	Ignition sense input	Input Voltage	10.8	-	16	V	
3	SP2/PA	O	Analog	Speaker output	Audio Output	3	4	-	W	at 4Ω,10%Distortion
					Coupling Capacitor	-	330	-	uF	
					RL	4	-	-	Ω	
					Allowable Frequency	300	-	3000	Hz	

TERMINAL FUNCTION

Pin No.	Pin Name	I/O	Signal Type	Description	Item and Condition	Min	Typ	Max	Unit	Note
4	DETO	O	Analog	FM detector output	Output Level	-	0.28	-	Vp-p	
					Coupling Capacitor	-	4.7	-	uF	
					Allowable Load	600	-	-	Ω	
	AFO	O		RX Audio output	Output Level	-	0.24	-	Vp-p	
					Coupling Capacitor	-	4.7	-	uF	
					Allowable Load	600	-	-	Ω	
5	DATAI	I	Analog	External Modulation input	Input Voltage Range	-	0.5	1.98	Vp-p	Standard deviation
					Input Impedance	-	100	-	kΩ	
	MI2	I		External MIC AF Input	Input Voltage Range	-	5	-	mVrms	
					Allowable Frequency	300	-	3000	Hz	
					Input Impedance	-	600	-	Ω	
6	FNC1/ TXD	I/O	Digital	Programmable I/O	VIH	4.0	-	5.2	V	
					VIL	-0.5	-	1.0	V	
					VOH (Io=-1.5mA)	4.0	-	5.2	V	
					VOL (Io=1.5mA)	-	-	1.1	V	
	TXD (RS-232C)	O	Digital	RS-232C Serial port (TXD)	Voltage Swing	±5	±9	-	V	3kΩ Load
					Baud Rate	1200	-	19200	bps	
					CL		100		pF	
7	FNC2/ RXD	I/O	Digital	Programmable I/O	VIH	4.0	-	5.2	V	
					VIL	-0.5	-	1.0	V	
					VOH (Io=-1.5mA)	4.0	-	5.2	V	
					VOL (Io=1.5mA)	-	-	1.1	V	
	RXD (RS-232C)	I	Digital	RS-232C Serial port (RXD)	Input Voltage Range	-30	-	30	V	
					Threshold Low	0.5	1.3	-	V	
					Threshold High	-	1.75	2.6	V	
					Baud Rate	1200	-	19200	bps	
8	FNC3	I/O	Digital	Programmable I/O	VIH	4.0	-	5.2	V	
					VIL	-0.5	-	1.0	V	
					VOH (Io=-1.5mA)	4.0	-	5.2	V	
					VOL (Io=1.5mA)	-	-	1.1	V	
	RTS (RS-232C)	O	Digital	RS-232C Serial port (RTS)	Voltage Swing	±5	±9	-	V	3kΩ Load
9	FNC4	I/O	Digital	Programmable I/O	VIH	4.0	-	5.2	V	
					VOH	-0.5	-	1.0	V	
					VOH (Io=-1.5mA)	4.0	-	5.2	V	
					VOL (Io=1.5mA)	-	-	1.1	V	
	CTS (RS-232C	I	Digital	RS-232C Serial port (CTS)	Input Voltage Range	-30	-	30	V	
					Threshold Low	0.5	1.3	-	V	
					Threshold High	-	1.75	2.6	V	
10	FNC5	I/O	Digital	Programmable I/O	VIH	4.0	-	5.2	V	
					VOH	-0.5	-	1.0	V	
					VOH (Io=-1.5mA)	4.0	-	5.2	V	
					VOL (Io=1.5mA)	-	-	1.1	V	

TERMINAL FUNCTION

Pin No.	Pin Name	I/O	Signal Type	Description	Item and Condition	Min	Typ	Max	Unit	Note
11	FNC6	I/O	Digital	Programmable I/O	VIH	4.0	-	5.2	V	
					VIL	-0.5	-	1.0	V	
					VOH(Io=-1.5mA)	4.0	-	5.2	V	
					VOL(Io=1.5mA)	-	-	1.1	V	
12	50MC	O	Power	5V DC Power supply	Output Voltage	4.5	5.0	5.25	V	
					Output Current	-	-	100	mA	
13	HR1	I	Analog	Horn alert signal input	Input Voltage	5	-	16	V	
					Input Current	-	-	2.0	A	
					Rds (ON)	-	55	108	mΩ	
14	HR2	O	Analog	Horn alert signal output	Output Voltage	-	-	16	V	
					Output Current	-	-	2.0	A	
15	GND	-	GND	Ground					-	

NX-720H(G)/720H PC BOARD

DISPLAY UNIT (X54-3830-10) Component side view (J79-0345-09)

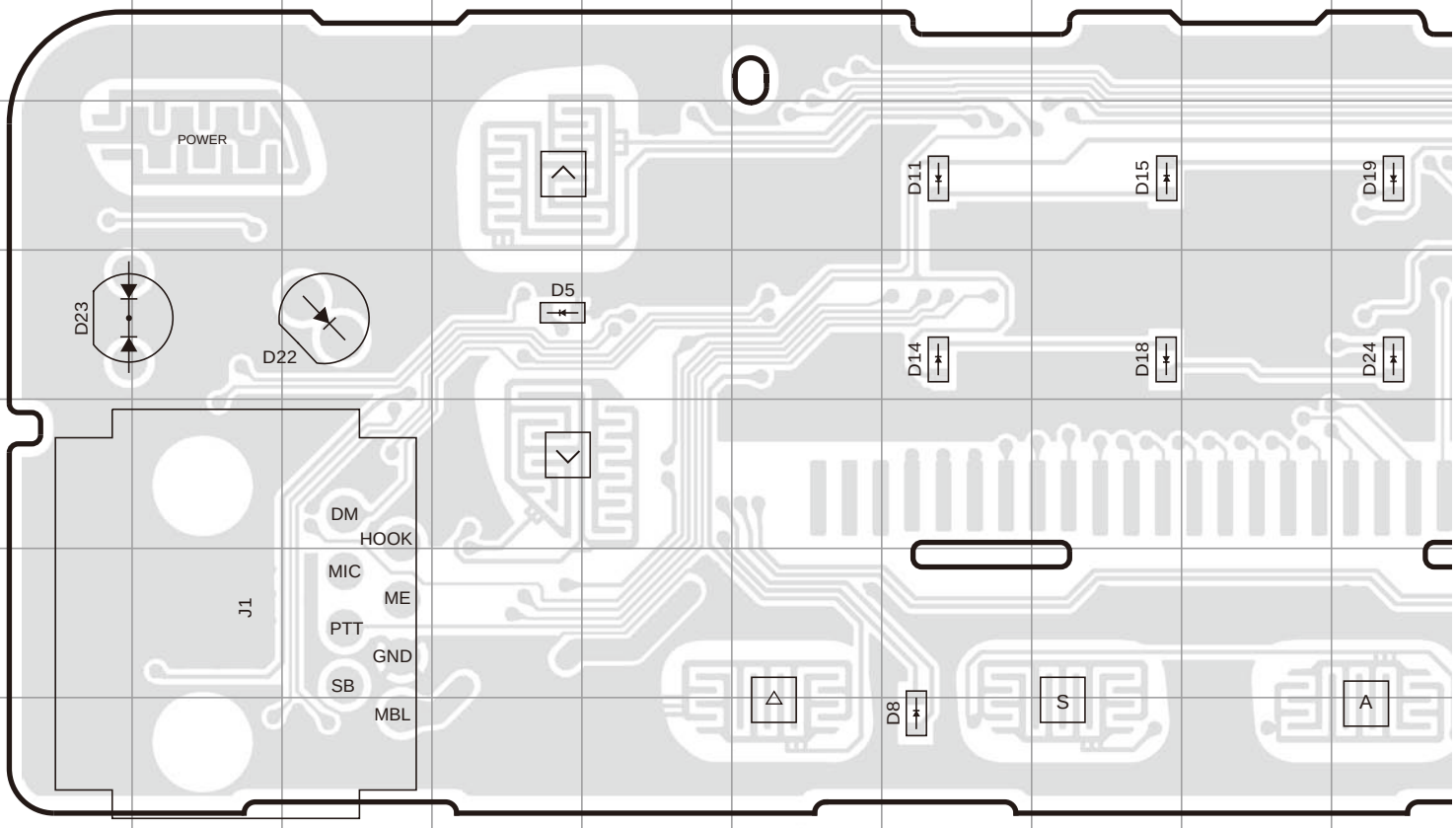

DISPLAY UNIT (X54-3830-10) Foil side view (J79-0345-09)

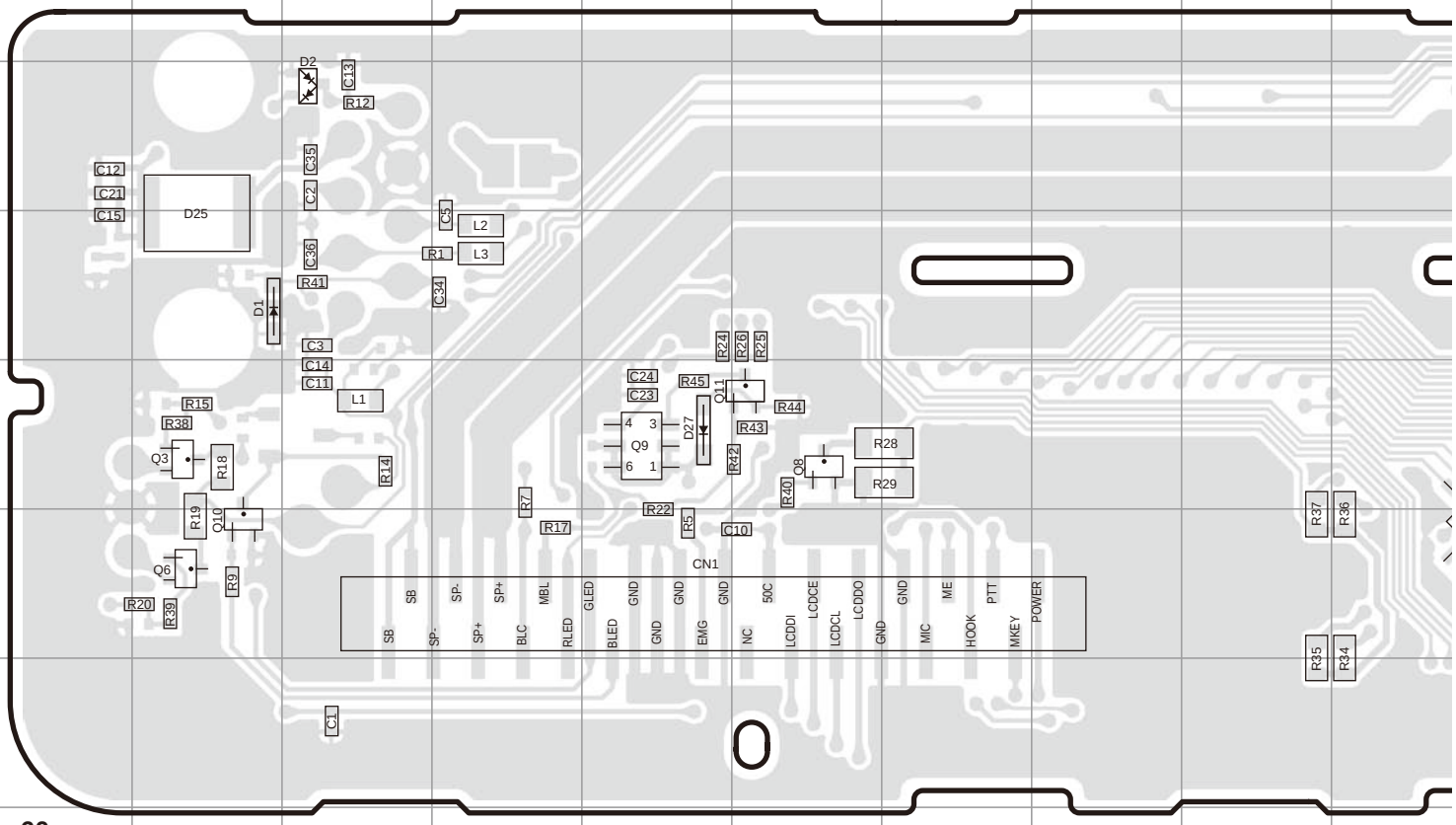

DISPLAY UNIT (X54-3830-10) Component side view (J79-0345-09)

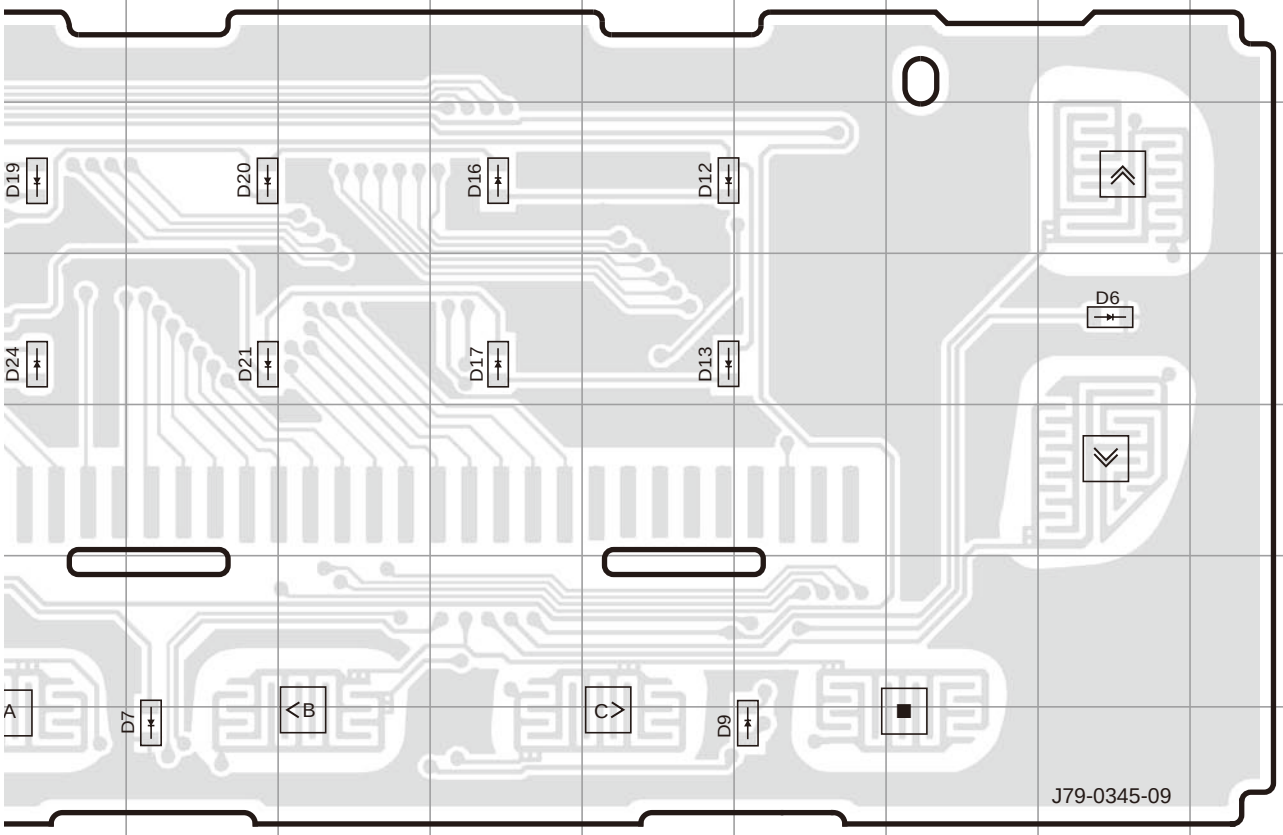

Ref. No.	Address
D5	4D
D7	7K
D8	7G
D9	7O
D11	3G
D12	3N
D13	4N
D14	4G
D15	3H
D17	4M
D16	3M
D18	4H
D19	3J
D21	4K
D20	3K
D22	4C
D23	4B

Component side
Layer 1
Layer 2
Foil side

DISPLAY UNIT (X54-3830-10) Foil side view (J79-0345-09)

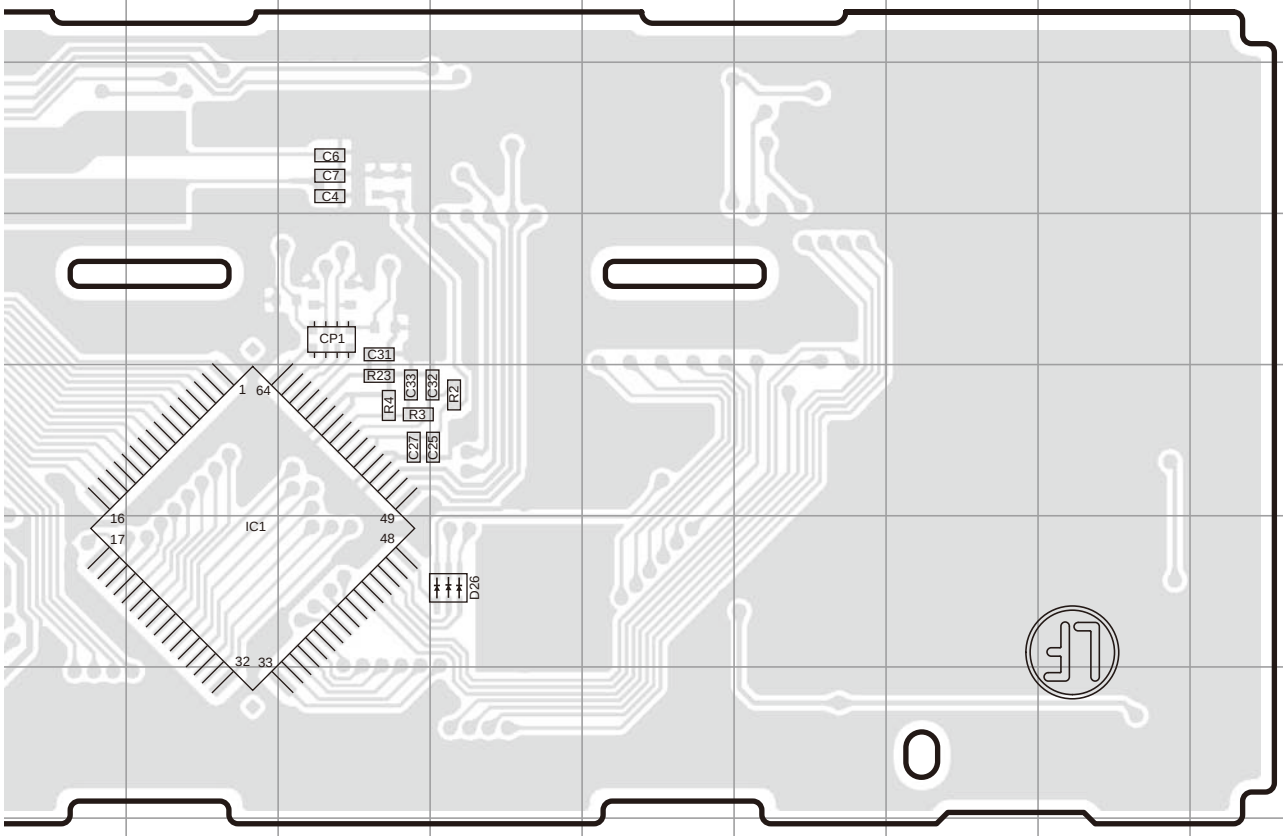

Ref. No.	Address
IC1	12K
Q3	11B
Q6	12B
Q8	11F
Q9	11E
Q10	12B
Q11	11F
D1	10B
D2	9C
D25	10B
D26	12M
D27	11E

Component side
Layer 1
Layer 2
Foil side

NX-720H(G)/720H PC BOARD

TX-RX UNIT (X57-8230-1X)
Component side view (J79-0343-09)

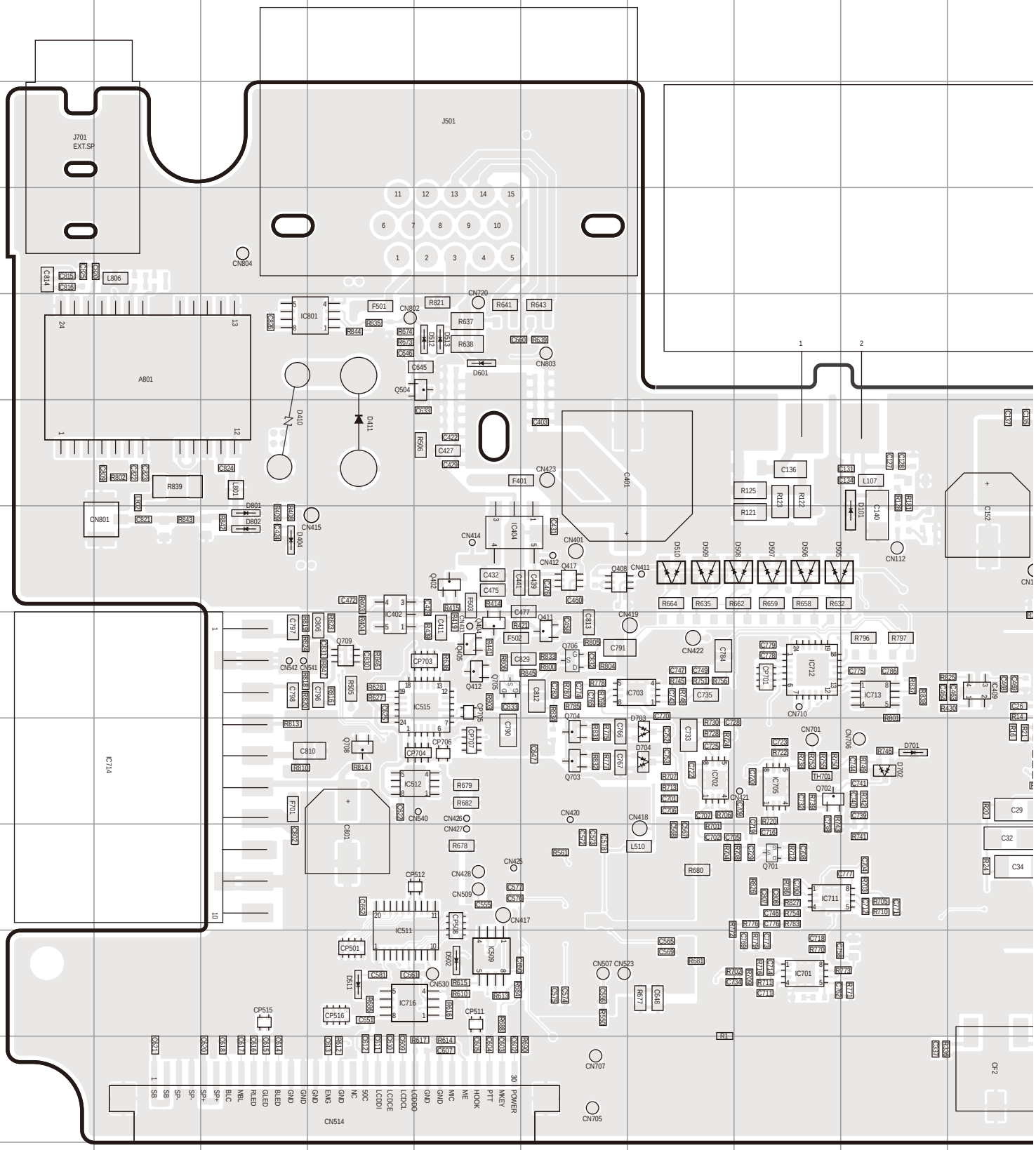

PC BOARD NX-720H(G)/720H

TX-RX UNIT (X57-8230-1X)
Component side view (J79-0343-09)

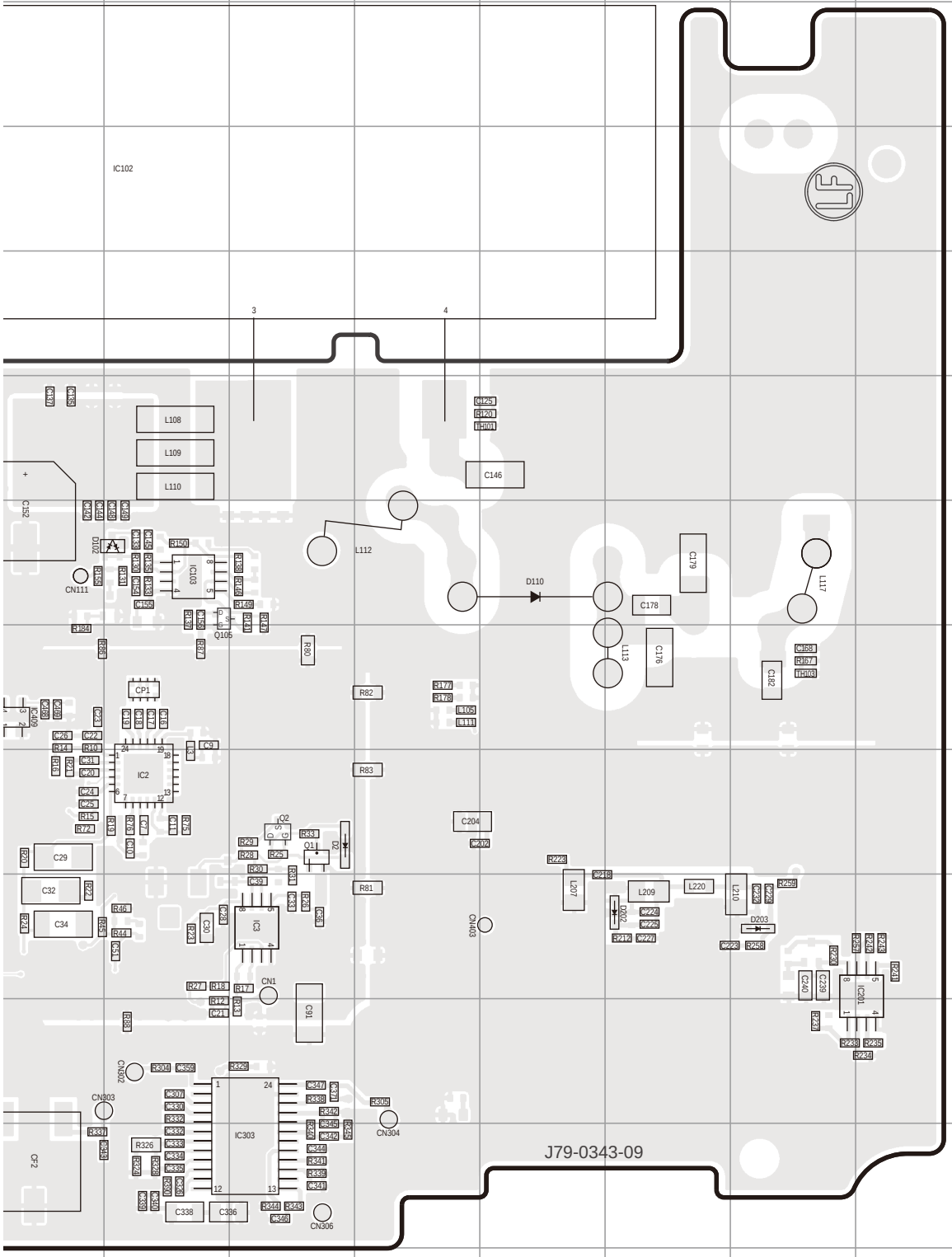

Ref. No.	Address	Ref. No.	Address
IC2	9K	Q702	9H
IC3	10L	Q703	9F
IC103	7K	Q704	9F
IC201	10Q	Q705	8E
IC303	11L	Q706	8F
IC402	8D	Q708	9D
IC404	7E	Q709	8D
IC409	8J	D2	9L
IC509	11E	D101	7I
IC511	10D	D102	7K
IC512	9E	D110	7N
IC515	8E	D202	10O
IC701	11H	D203	10P
IC702	9G	D404	7C
IC703	8G	D410	6C
IC705	9H	D411	6D
IC711	10H	D502	11E
IC712	8H	D505	7H
IC713	8I	D506	7H
IC716	11D	D507	7H
IC801	5D	D508	7H
Q1	9L	D509	7G
Q2	9L	D510	7G
Q105	7K	D511	11D
Q402	7E	D512	5E
Q404	8E	D513	5E
Q405	8E	D601	5E
Q408	7F	D701	9I
Q411	8F	D702	9I
Q412	8E	D703	9G
Q417	7F	D704	9G
Q504	5E	D801	7C
Q701	10H	D802	7C

Component side

Layer 1
Layer 2
Layer 3
Layer 4
Layer 5
Layer 6

Foil side

NX-720H(G)/720H PC BOARD

TX-RX UNIT (X57-8230-1X)
Foil side view (J79-0343-09)

Ref. No.	Address	Ref. No.	Address
IC1	7R	Q502	3O
IC301	11M	Q503	3N
IC304	12H	D4	10H
IC401	8M	D5	10I
IC405	7O	D6	8I
IC406	9M	D7	10H
IC407	8P	D8	10J
IC408	8N	D9	10H
IC501	11P	D10	10H
IC502	9P	D11	10J
IC503	11Q	D12	10I
IC504	12Q	D13	8I
IC506	9N	D14	9J
IC507	10N	D15	10J
IC508	11M	D16	8H
IC513	8L	D17	8H
IC514	8L	D103	6E
IC516	7M	D104	5C
Q4	9J	D105	6E
Q5	8I	D106	6E
Q6	9I	D107	8E
Q7	9J	D108	10L
Q8	9I	D109	10L
Q9	9I	D111	7F
Q10	9H	D112	8F
Q11	8H	D113	8F
Q102	7K	D114	8F
Q106	7I	D204	9D
Q201	10G	D205	9E
Q202	9D	D206	9E
Q303	10K	D207	9E
Q305	11F	D401	6Q
Q401	6Q	D403	6P
Q403	5R	D405	9M
Q407	8O	D406	7N
Q409	9L	D407	7O
Q410	8O	D408	11L
Q414	11L	D409	11L
Q415	11L	D504	8L
Q416	11L	D705	5N
Q418	5Q	D706	5N
Q501	11M		

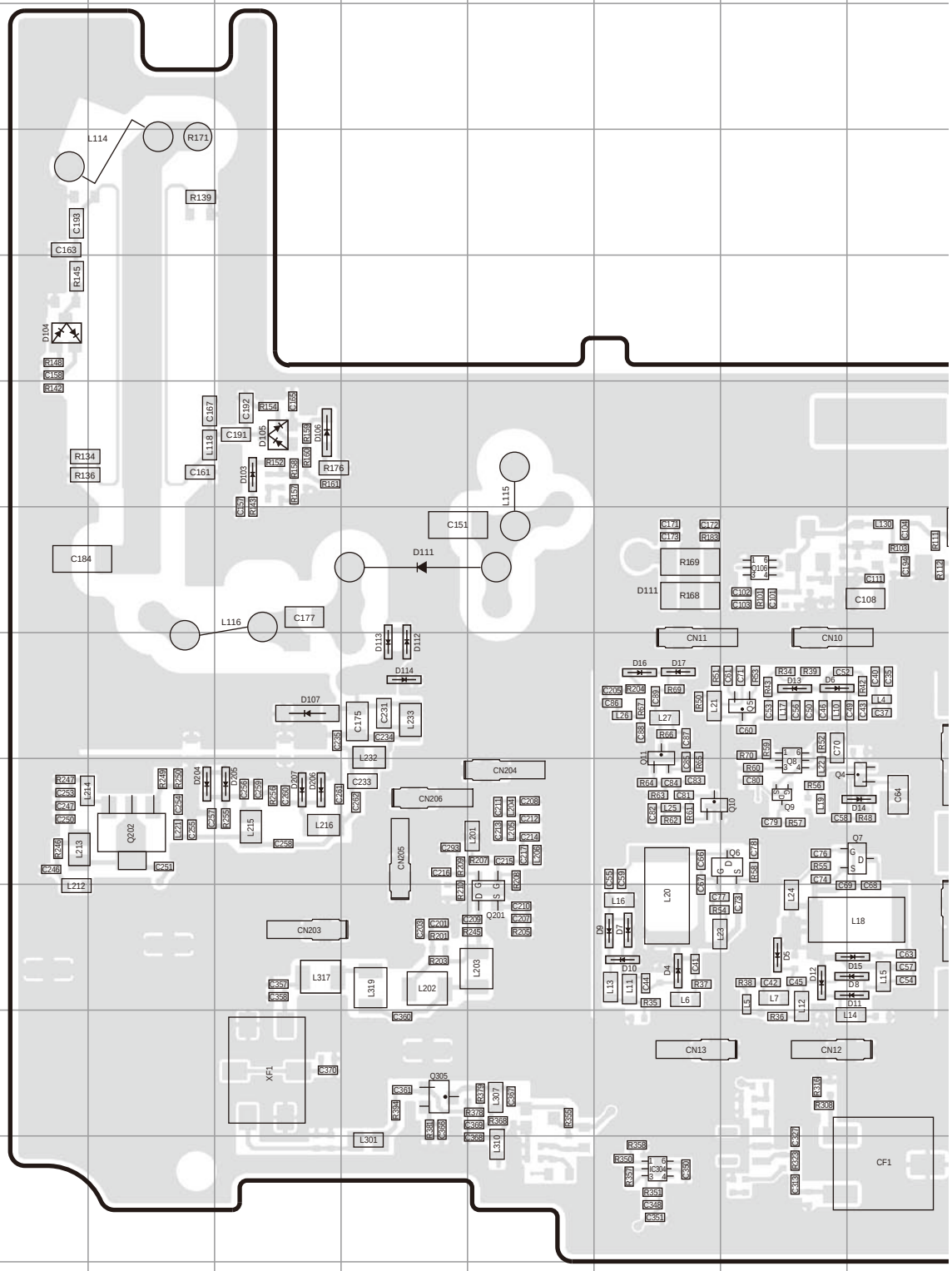

PC BOARD NX-720H(G)/720H

TX-RX UNIT (X57-8230-1X)
Foil side view (J79-0343-09)

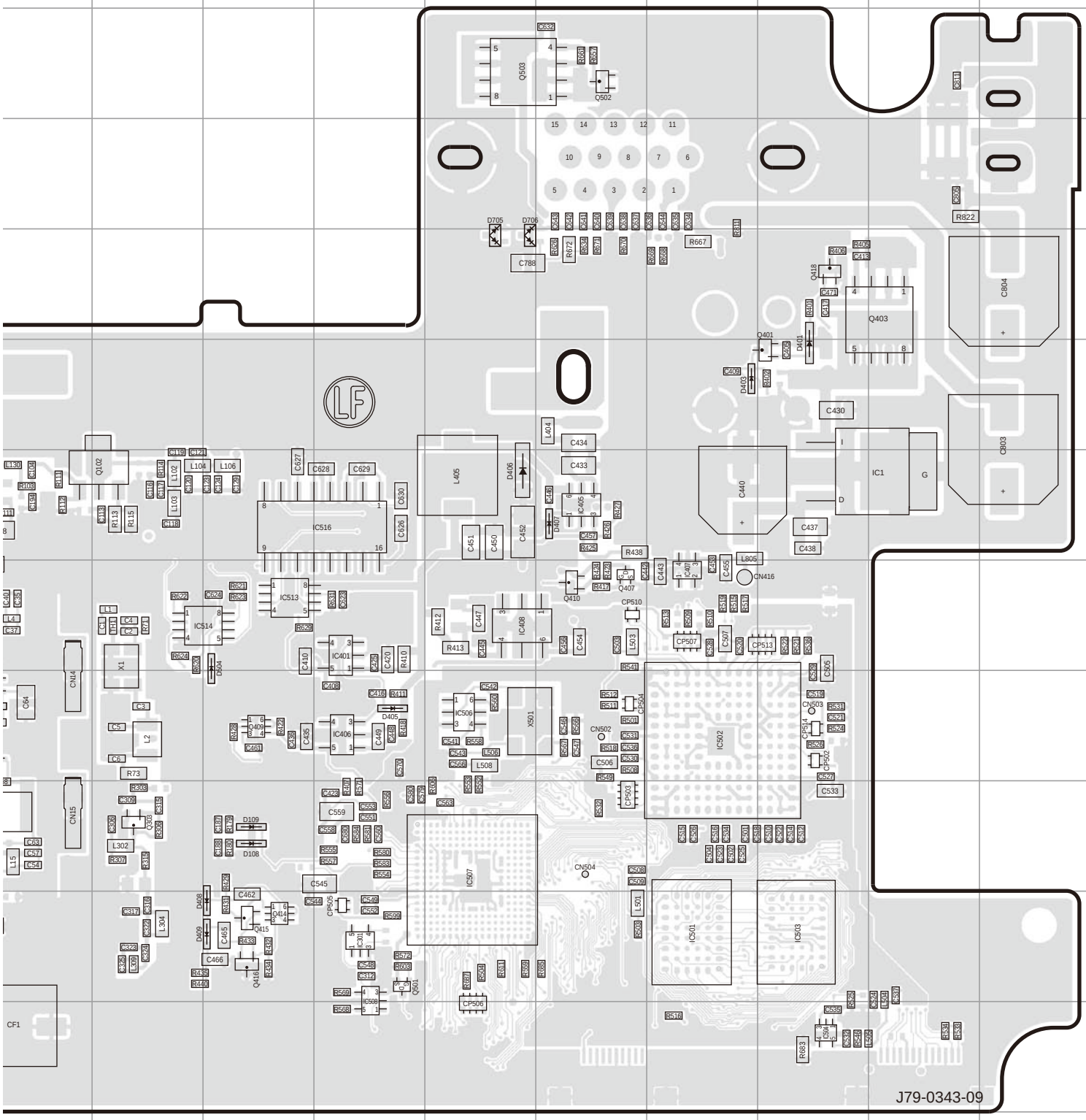

INTERCONNECTION DIAGRAM

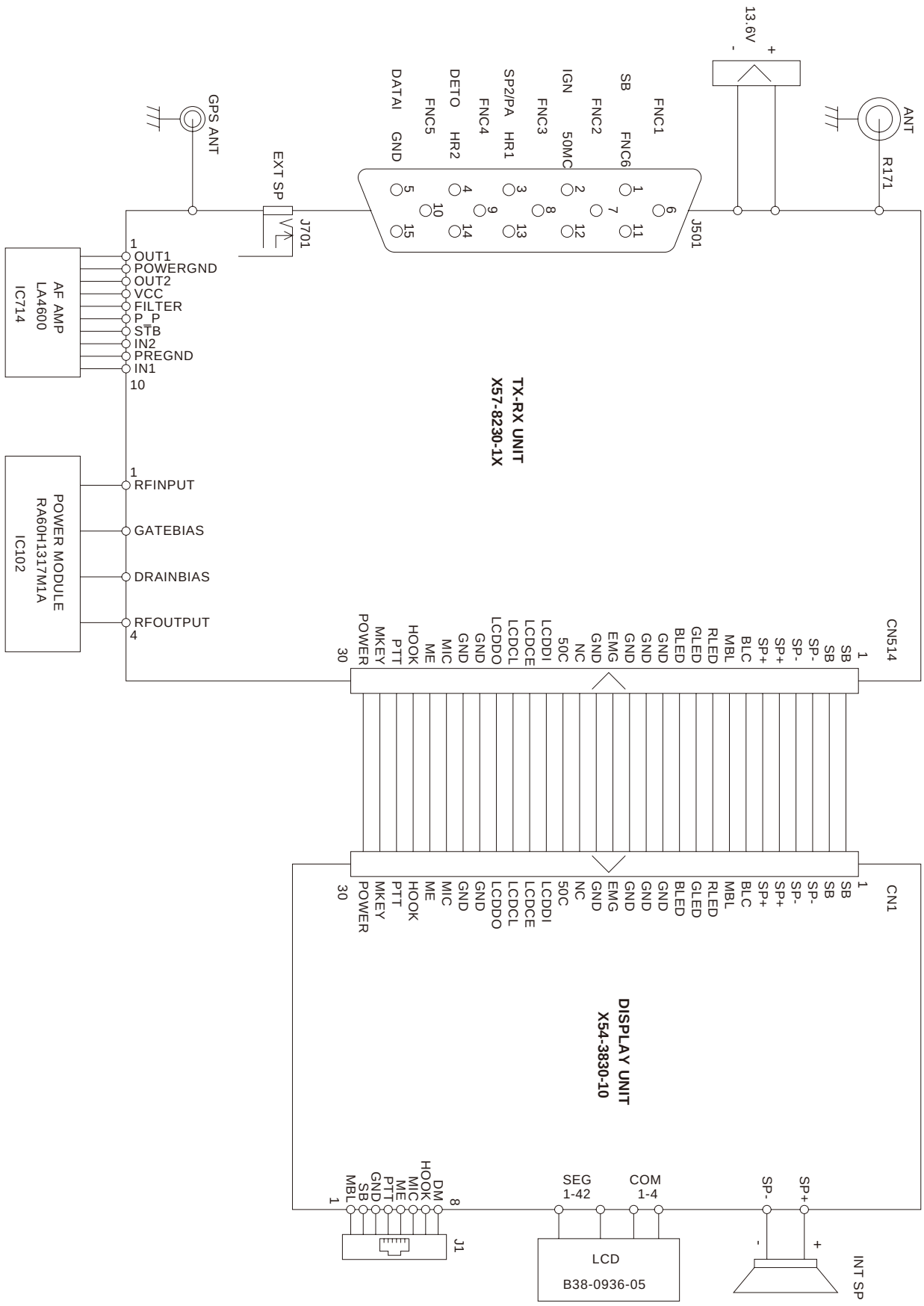

SCHEMATIC DIAGRAM NX-720H(G)/720H

TX-RX UNIT(X57-8230-1X)

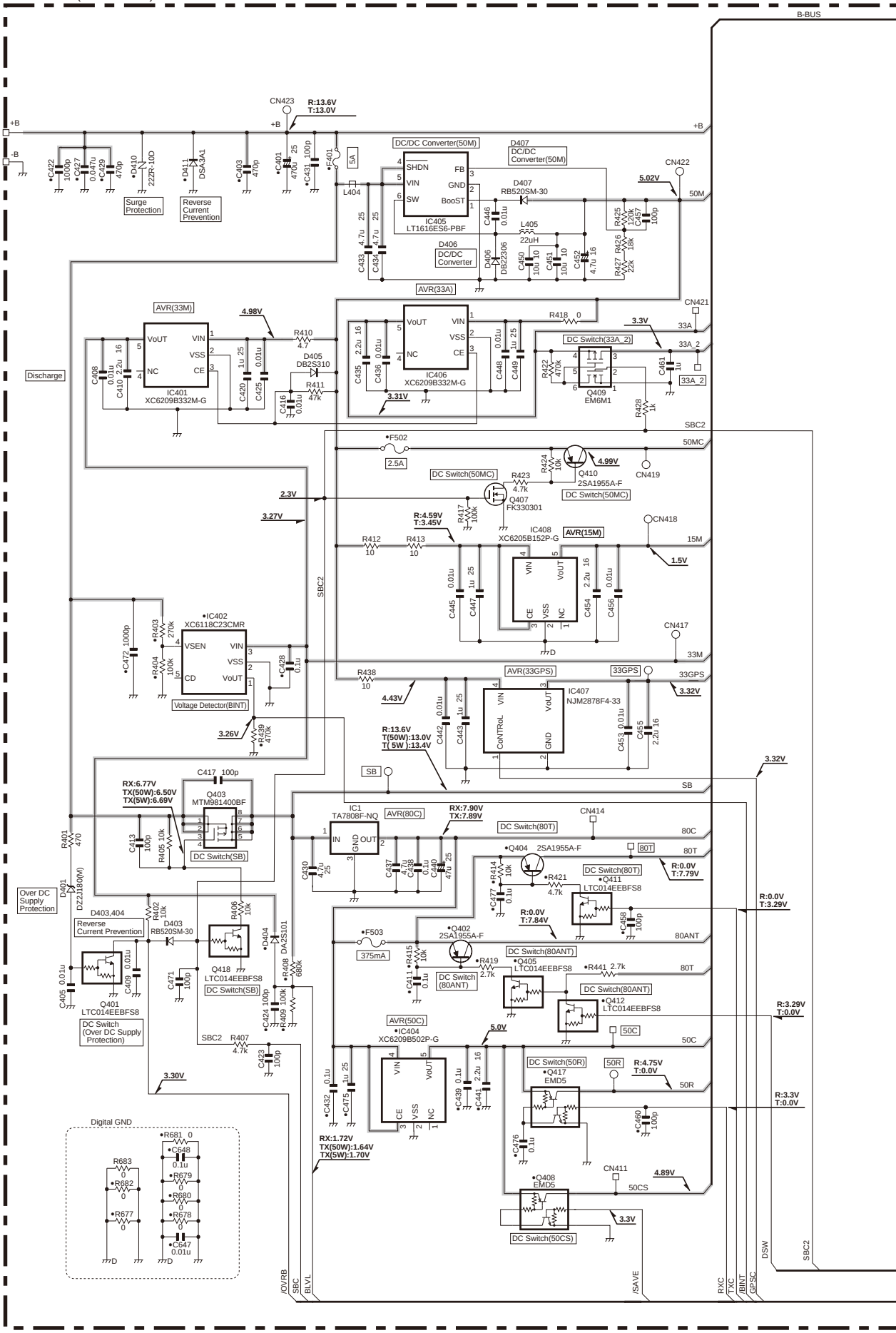

NX-720H(G)/720H SCHEMATIC DIAGRAM

TX-RX UNIT (X57-8230-1X)

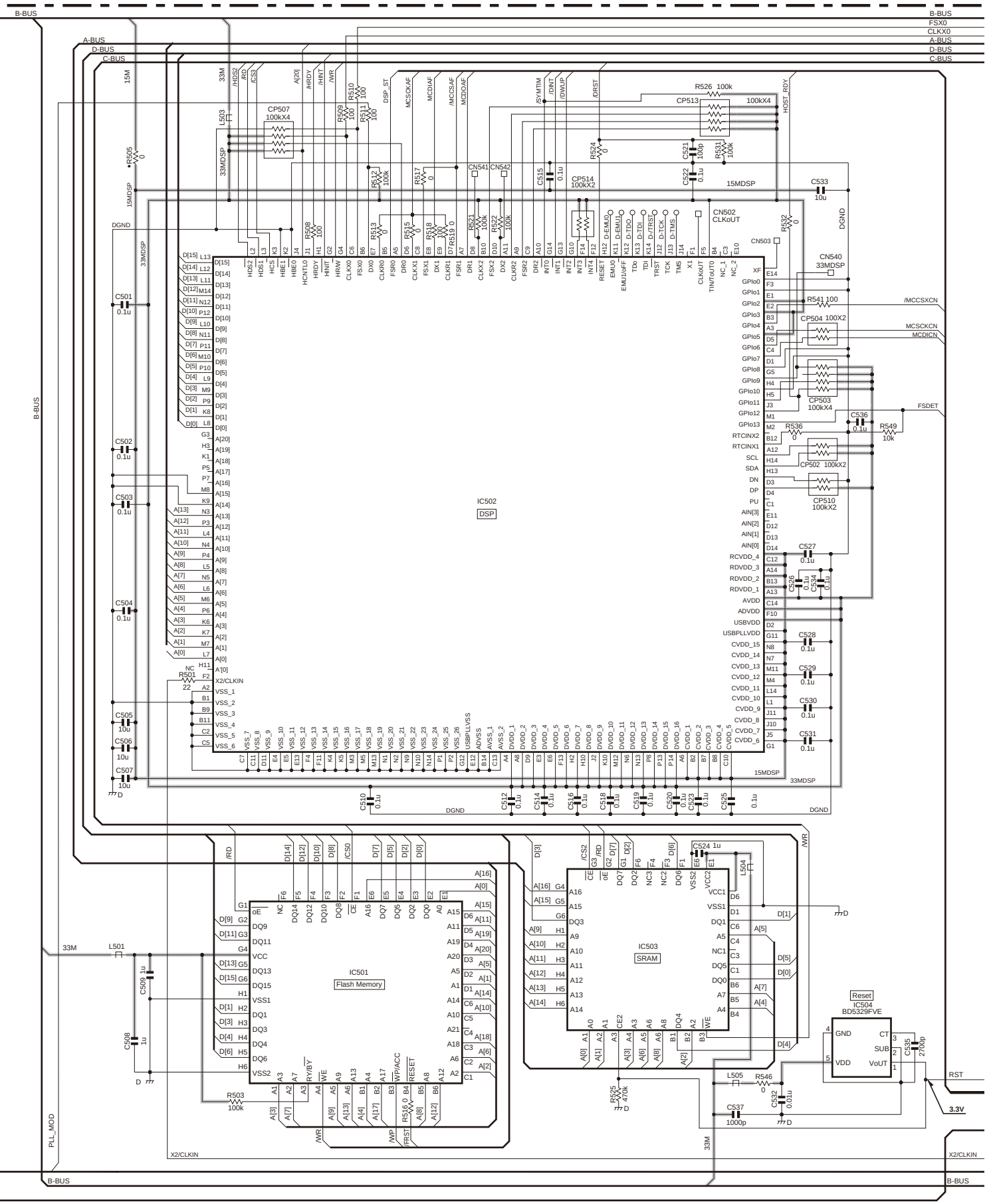

SCHEMATIC DIAGRAM NX-720H(G)/720H

TX-RX UNIT (X57-8230-1X)

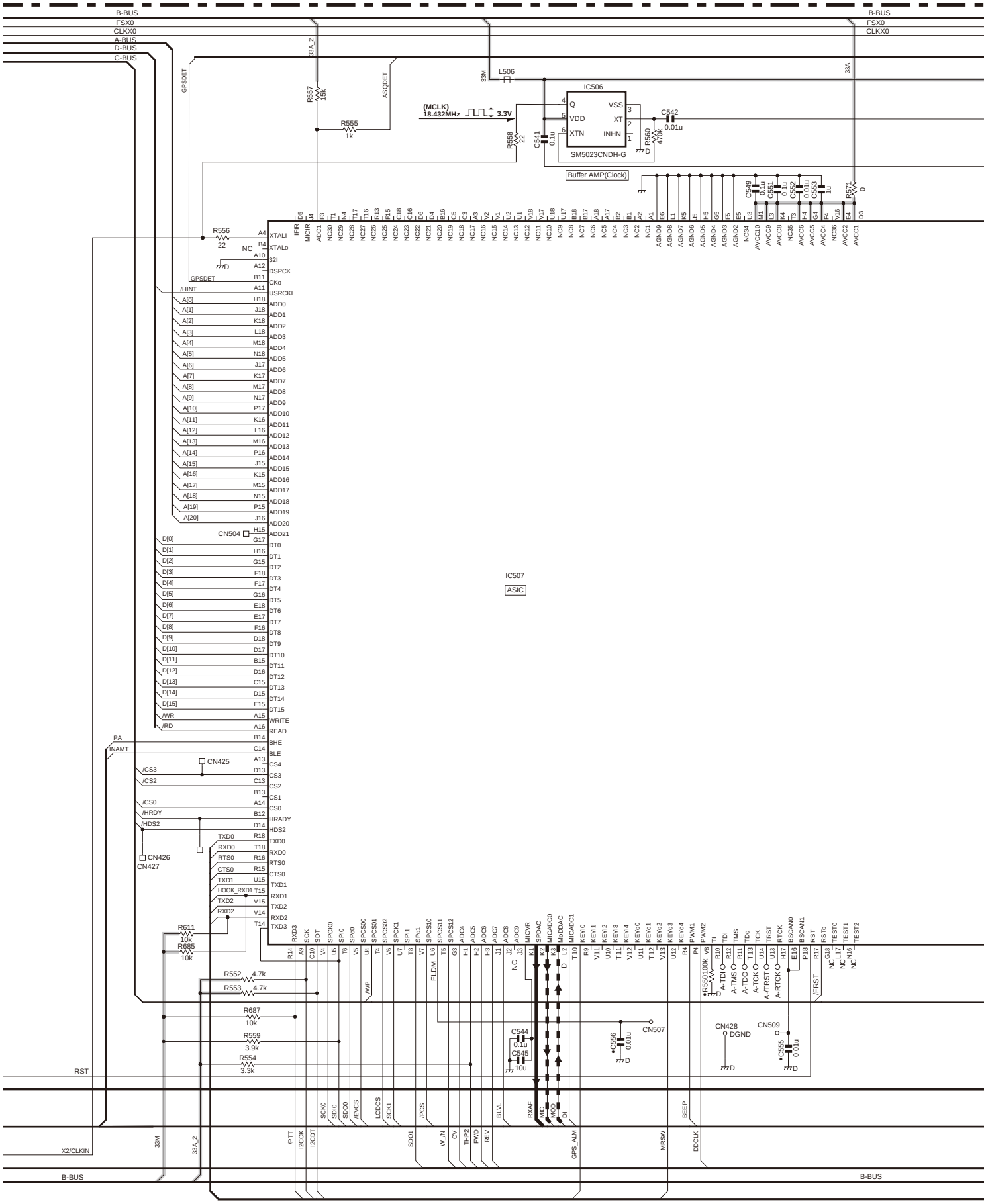

NX-720H(G)/720H SCHEMATIC DIAGRAM

TX-RX UNIT (X57-8230-1X)

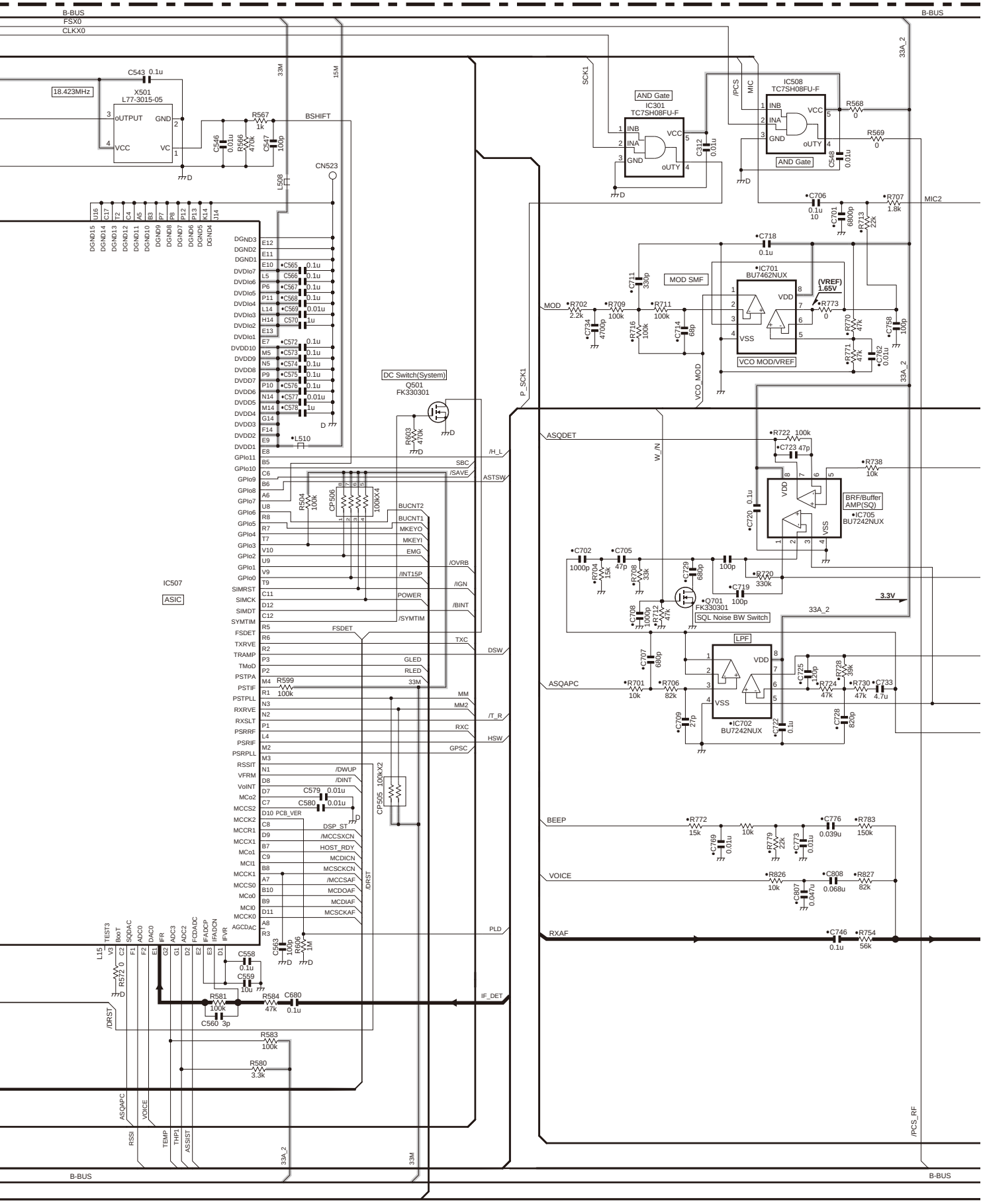

SCHEMATIC DIAGRAM NX-720H(G)/720H

TX-RX UNIT (X57-8230-1X)

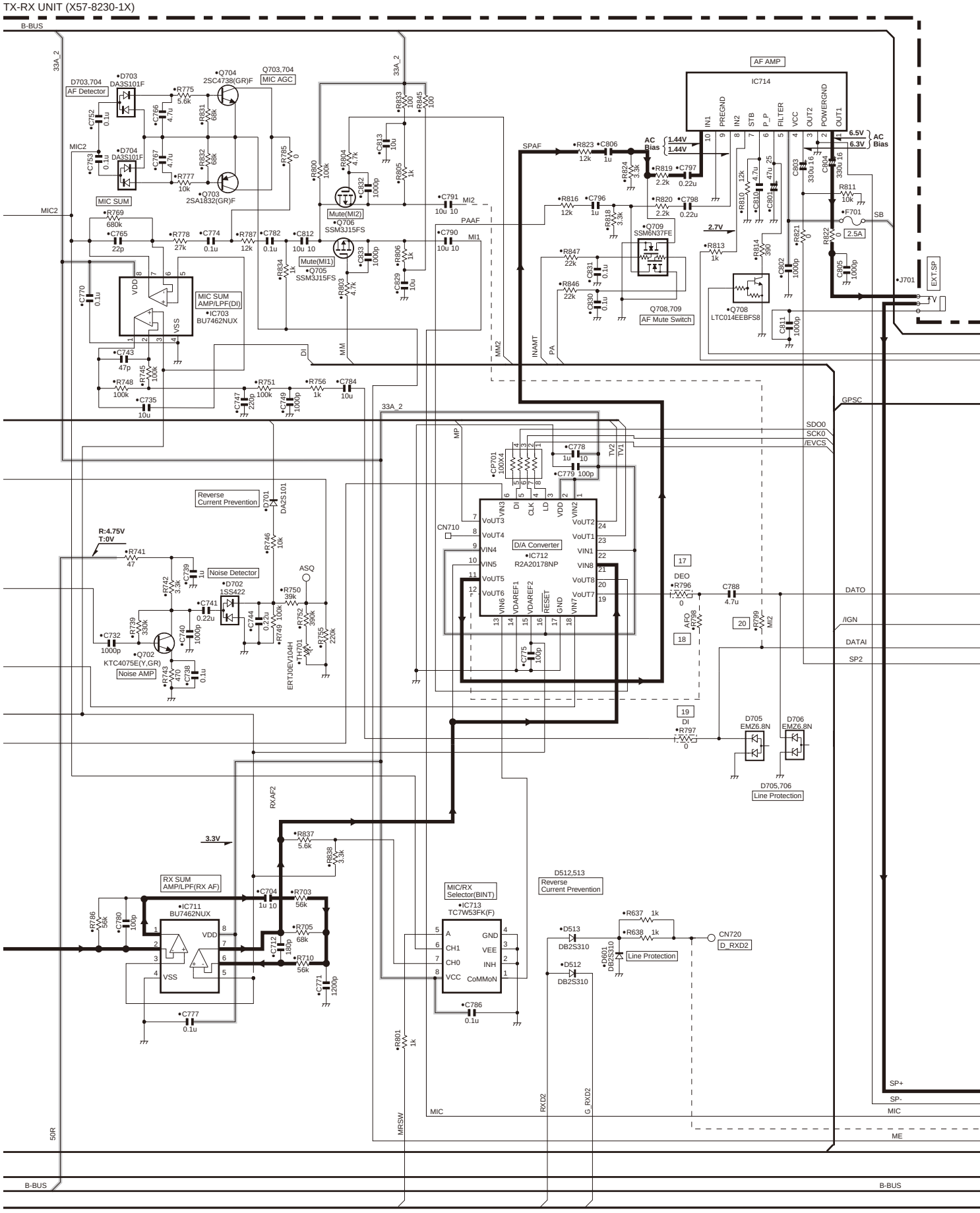

NX-720H(G)/720H SCHEMATIC DIAGRAM

*1

X57-823X-XX			A801	CN801	C809	C814	C815	C816	C820	C821	C822	C823	C824	C825	C826	D801	D802	L801	L802	L805	L806	R561	R802	R835	R839	R842	R843	R844	IC801
0-10	NX-720H(G)	K	YES	YES	YES	YES	YES	YES	YES	YES	YES	YES	YES	YES	YES	YES	YES	YES	YES	YES	YES	YES	YES	YES	YES	YES	YES	YES	YES
0-11	NX-720H	K	NO	NO	NO	NO	NO	NO	NO	NO	NO	NO	NO	NO	NO	NO	NO	NO	NO	NO	NO	NO	NO	NO	NO	NO	NO	NO	NO

TX-RX UNIT (X57-8230-1X

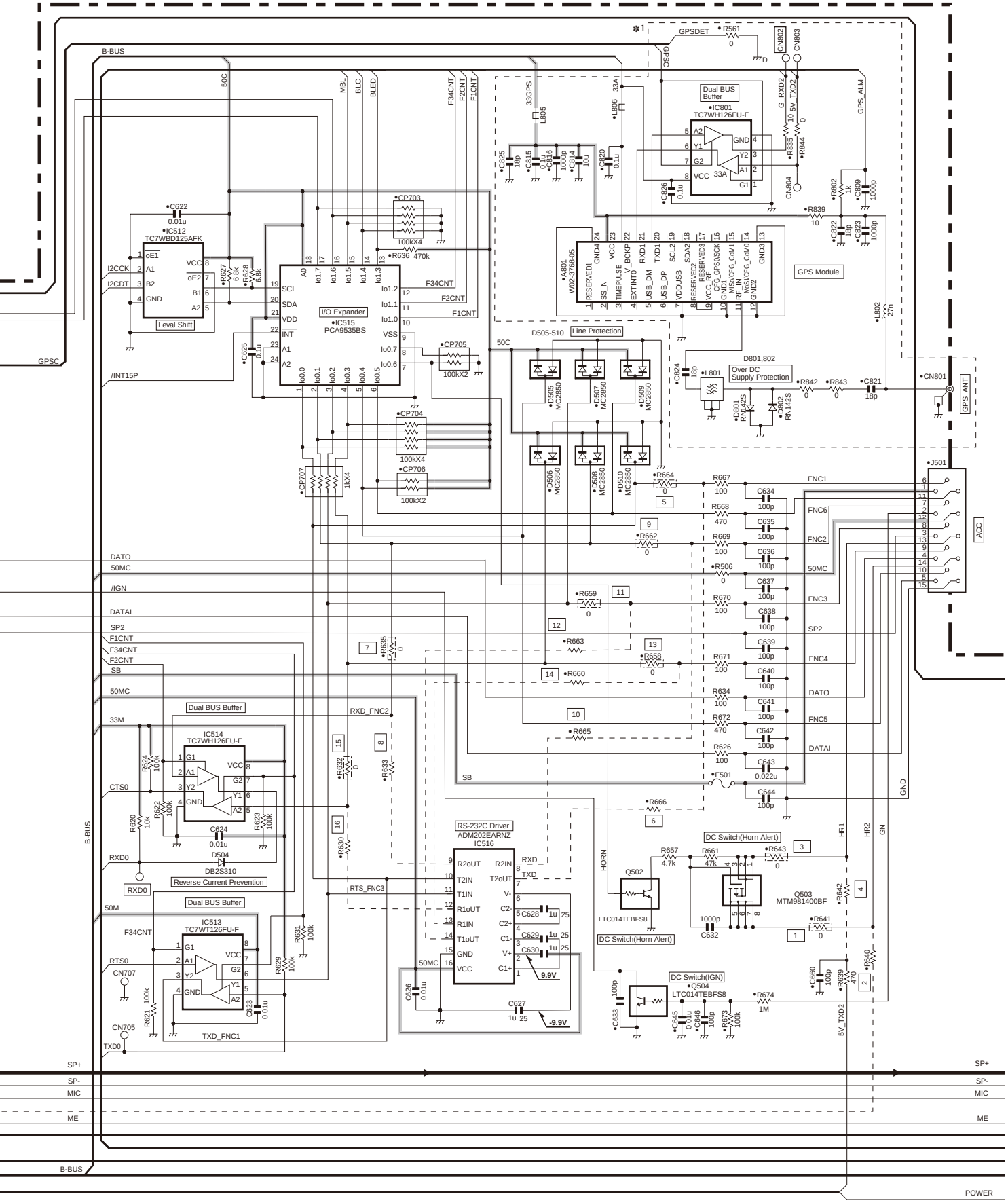

SCHEMATIC DIAGRAM NX-720H(G)/720H

TX-RX UNIT (X57-8230-1X)

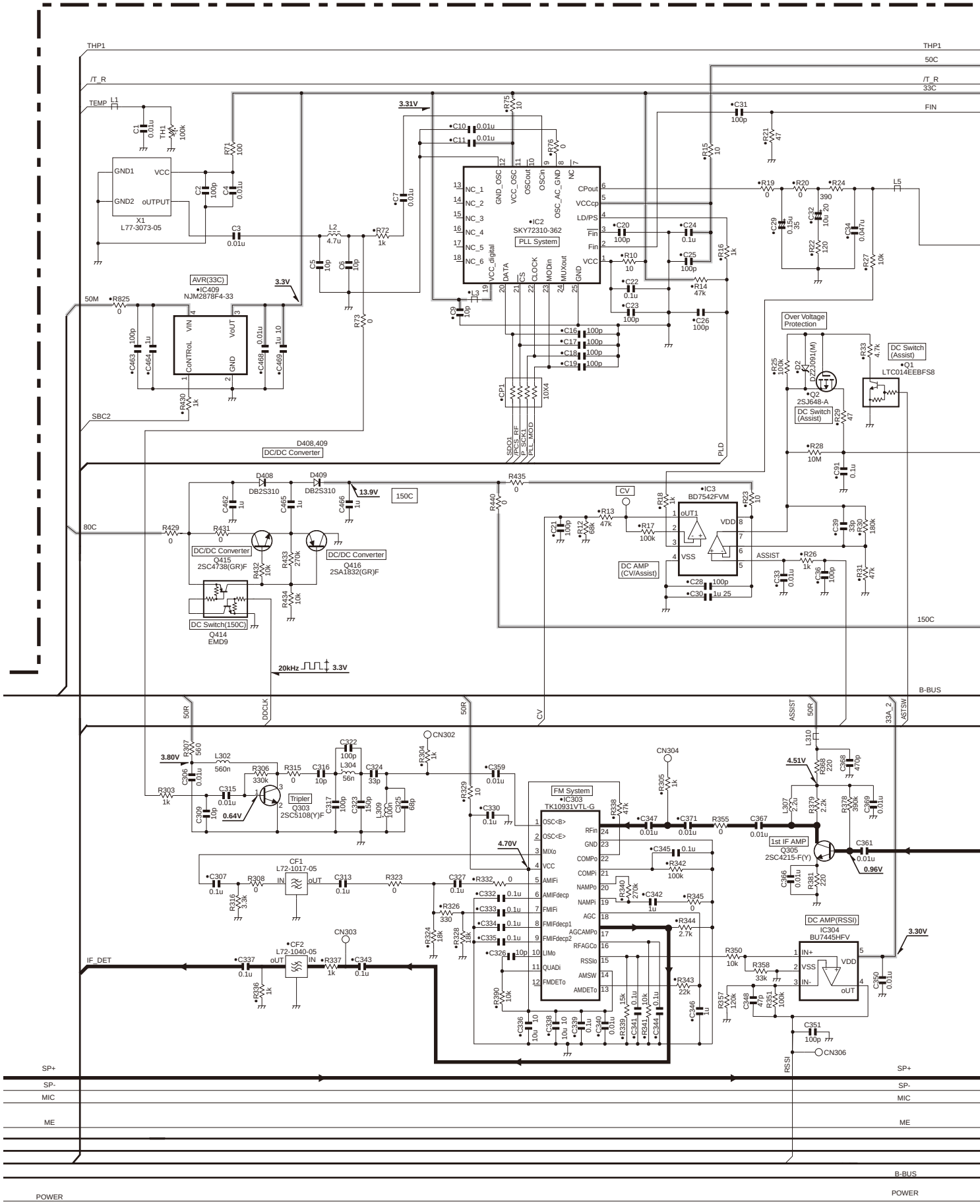

NX-720H(G)/720H SCHEMATIC DIAGRAM

TX-RX UNIT (X57-8230-1X)

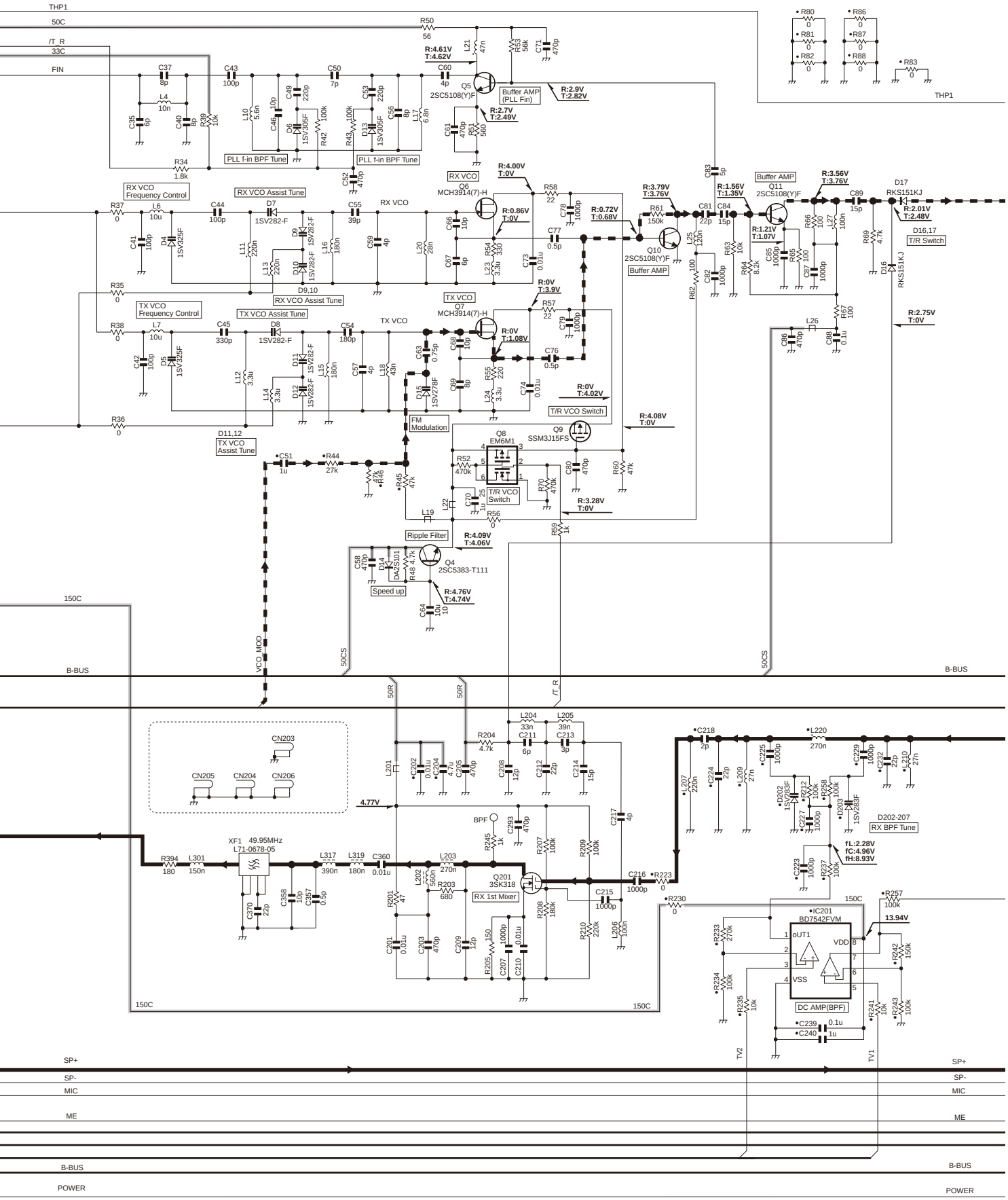

SCHEMATIC DIAGRAM NX-720H(G)/720H

TX-RX UNIT (X57-8230-1X)

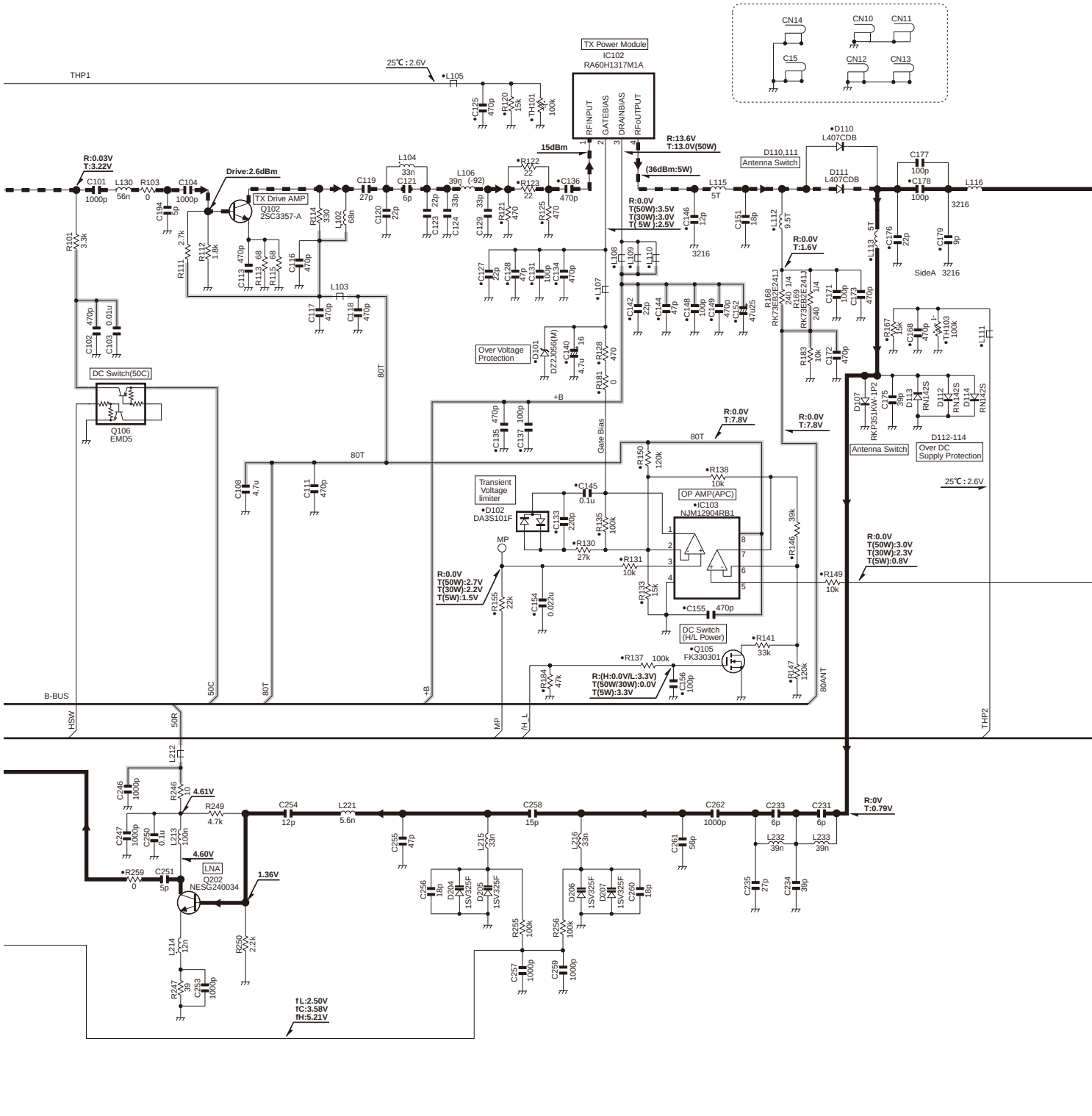

NX-720H(G)/720H SCHEMATIC DIAGRAM

TX-RX UNIT (X57-8230-1X)

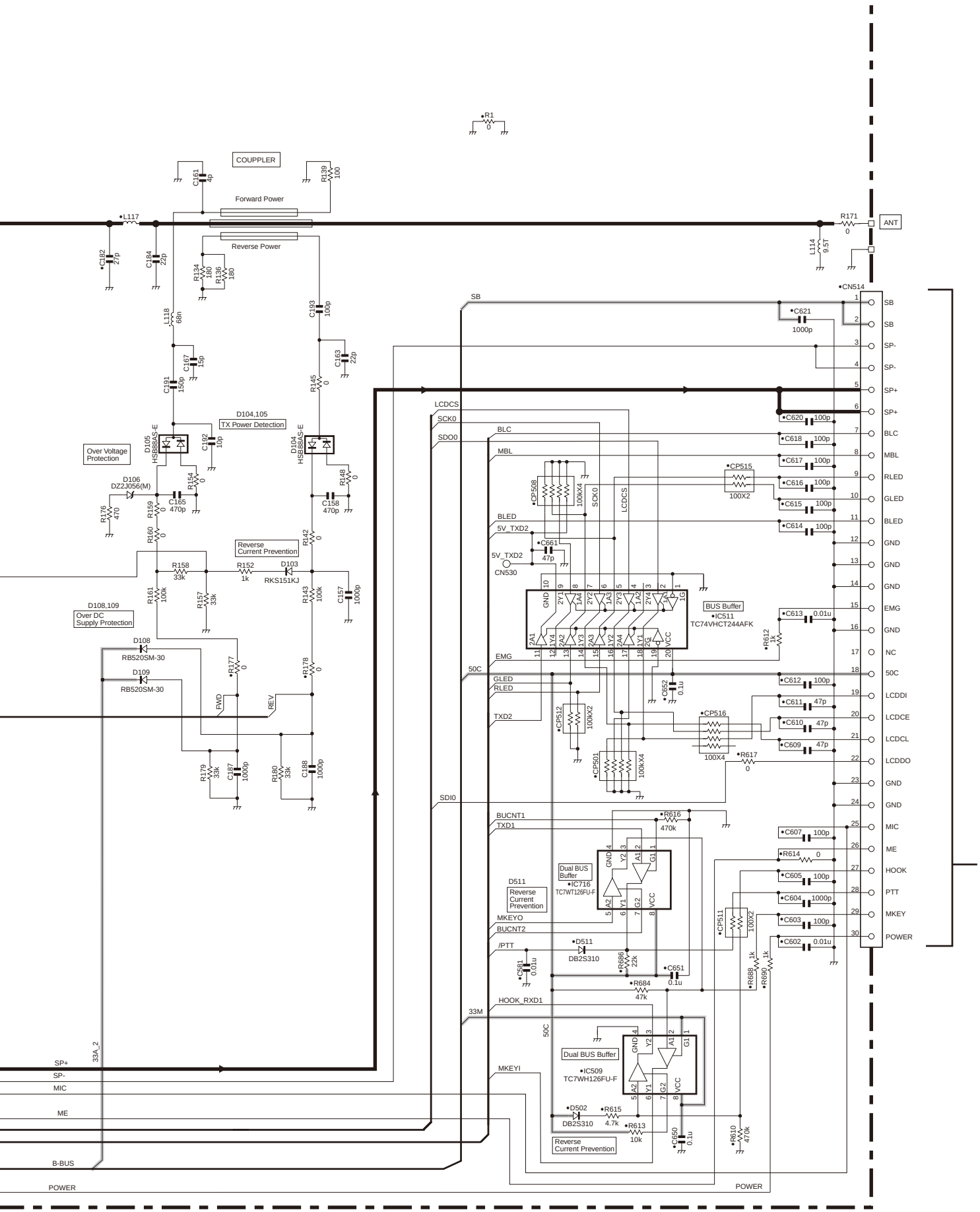

SCHEMATIC DIAGRAM NX-720H(G)/720H

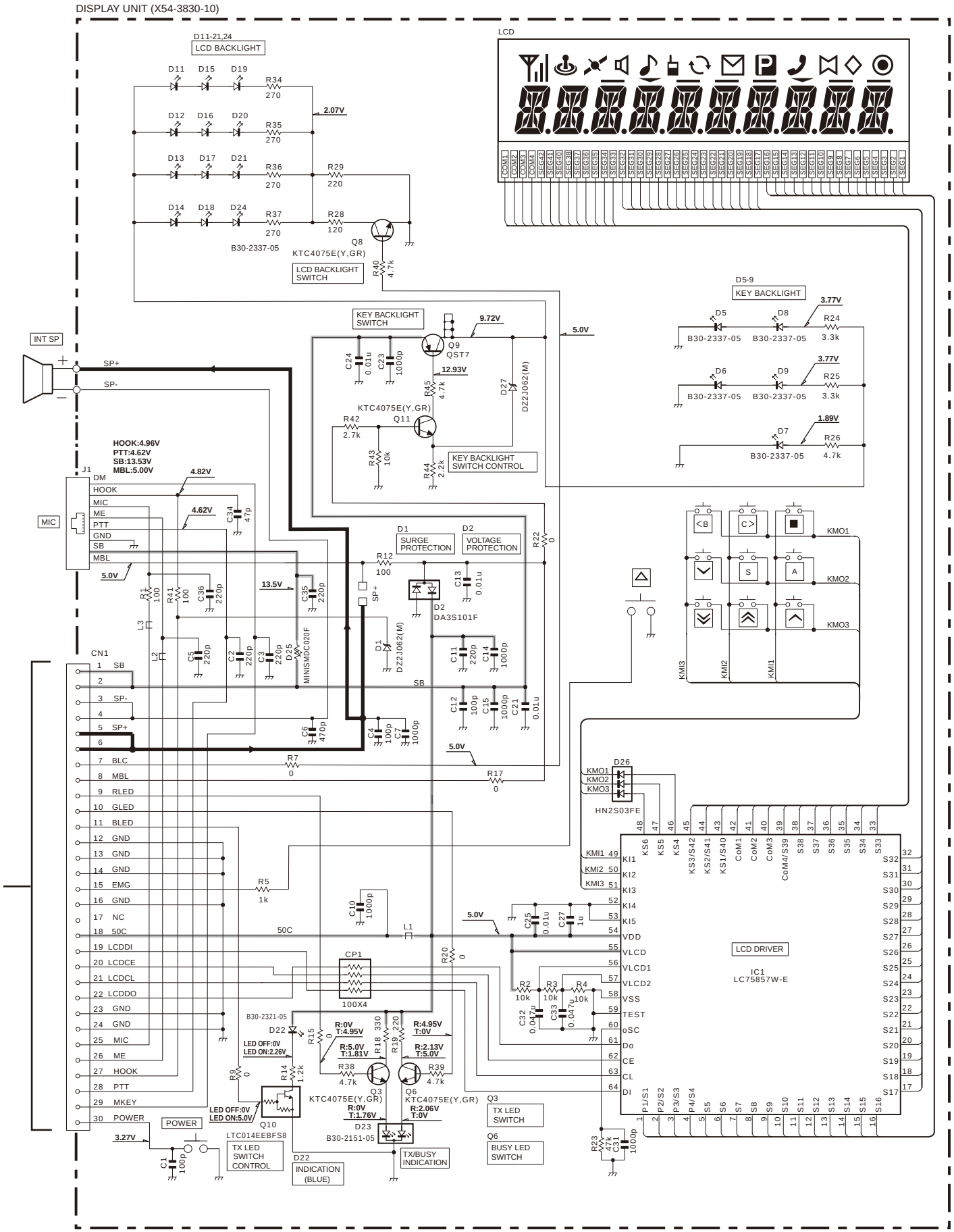

BLOCK DIAGRAM

TX-RX UNIT (X57-8230-1X)

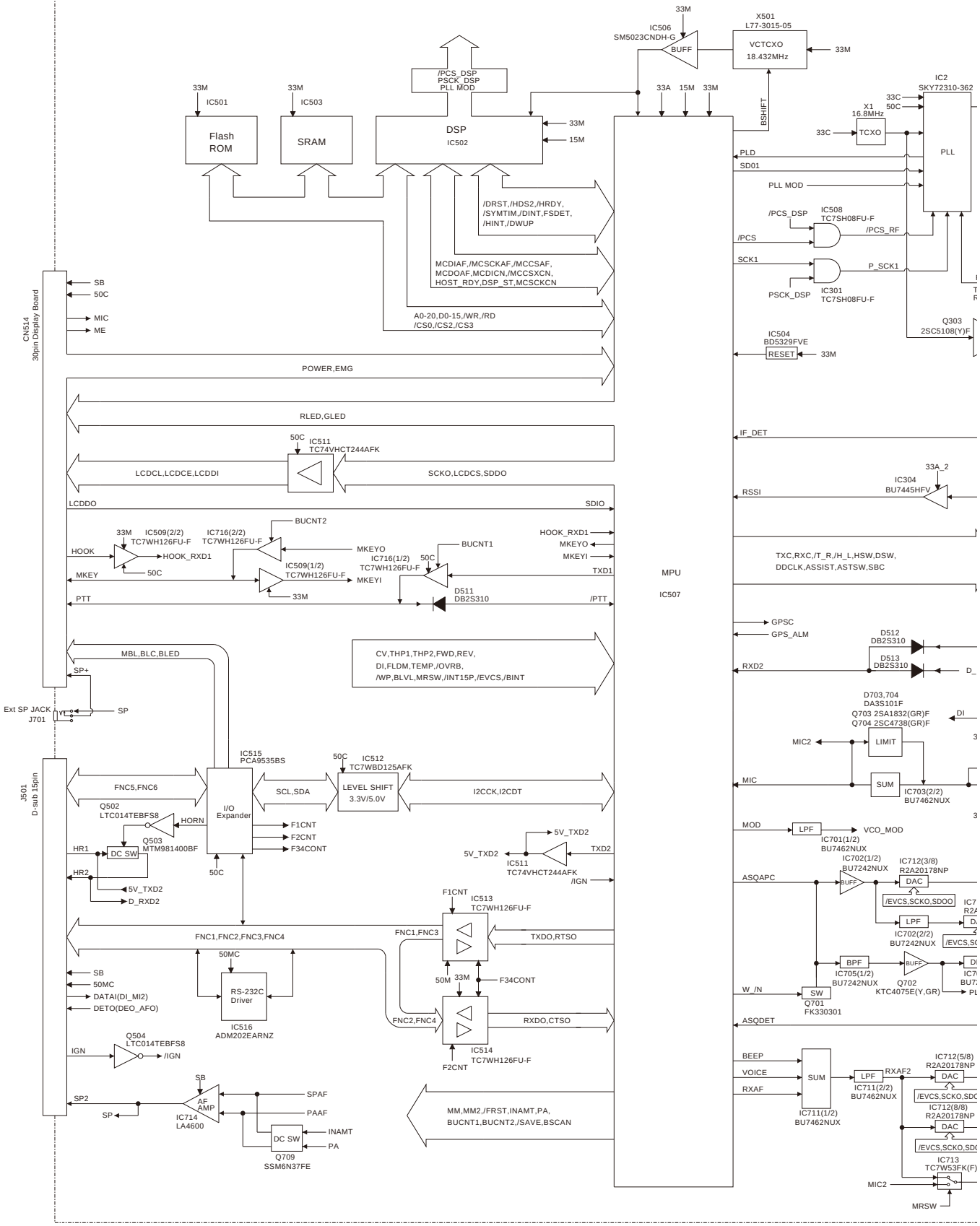

BLOCK DIAGRAM

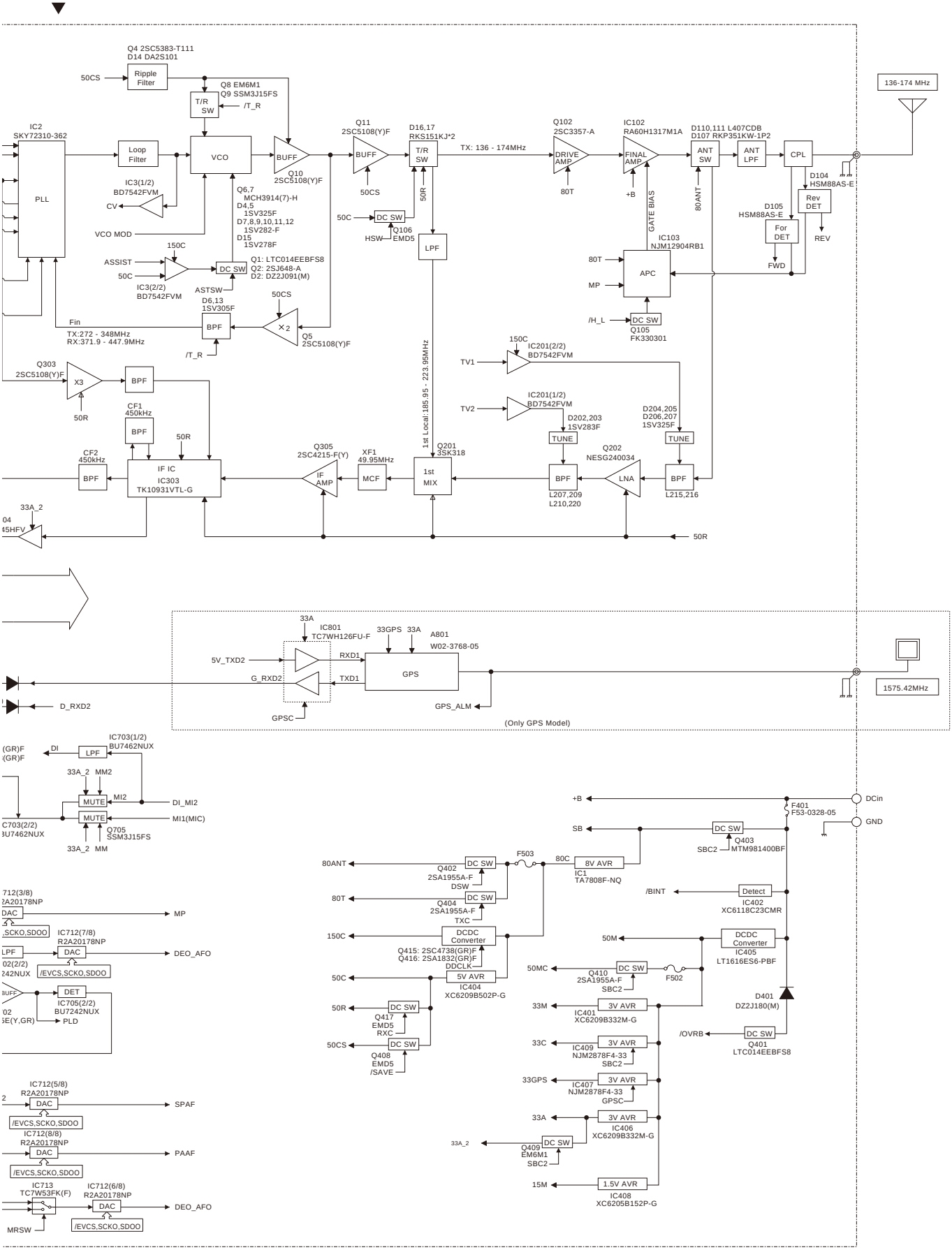

BLOCK DIAGRAM

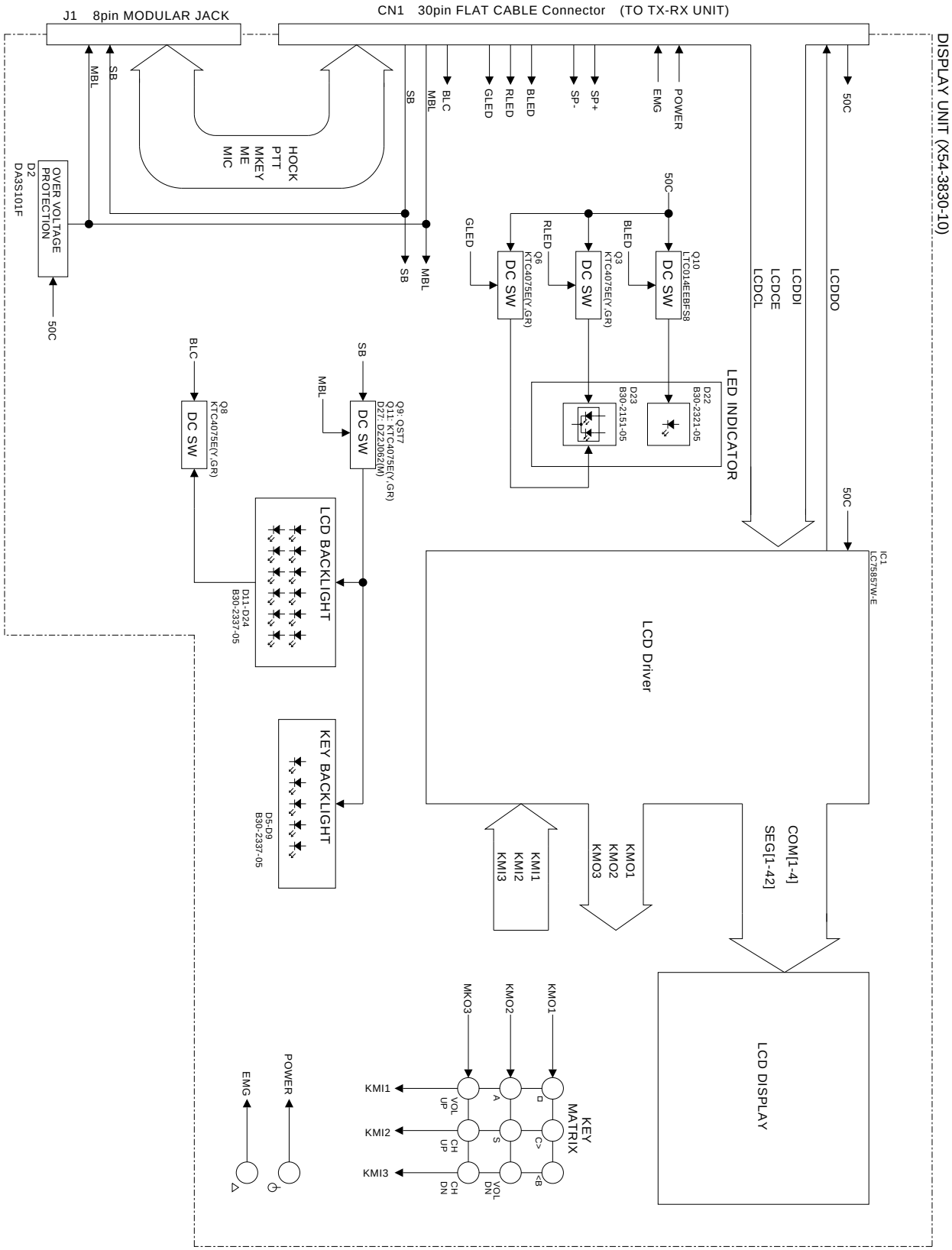

LEVEL DIAGRAM

Receiver Section

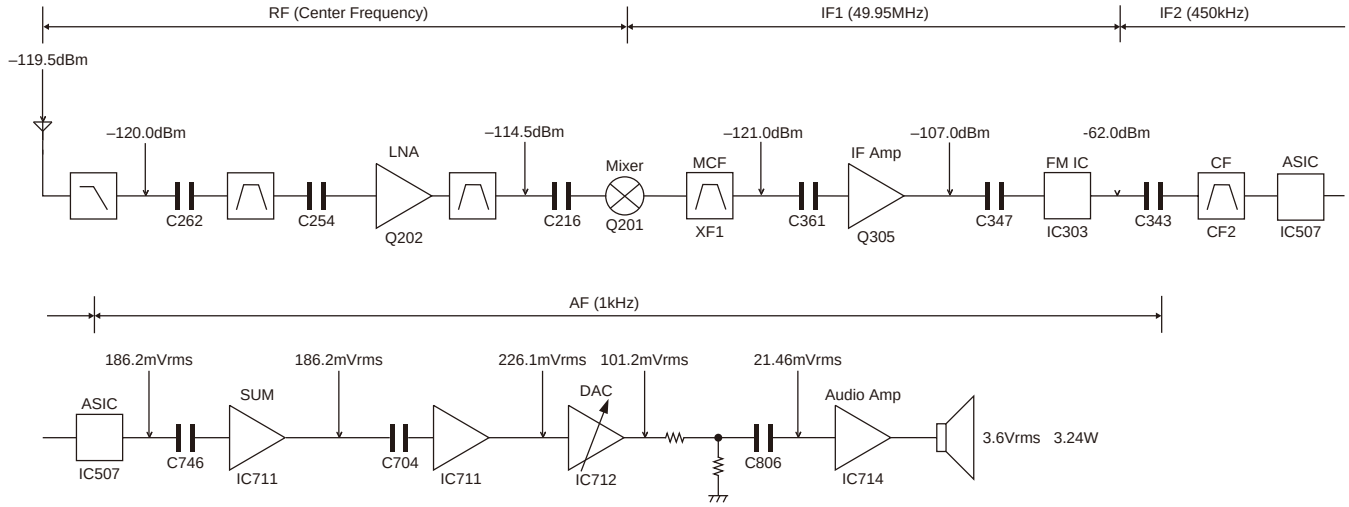

To make measurements in the AF section,connect the AC level meter. (ANT input:–53dBm, 1kHz FM, 3kHz DEV (Wide))
In the RF section, use a 1000pF coupling capacitor.
(The display shows the SSG input value required to obtain 12dB SINAD without local level.)

Transmitter Section

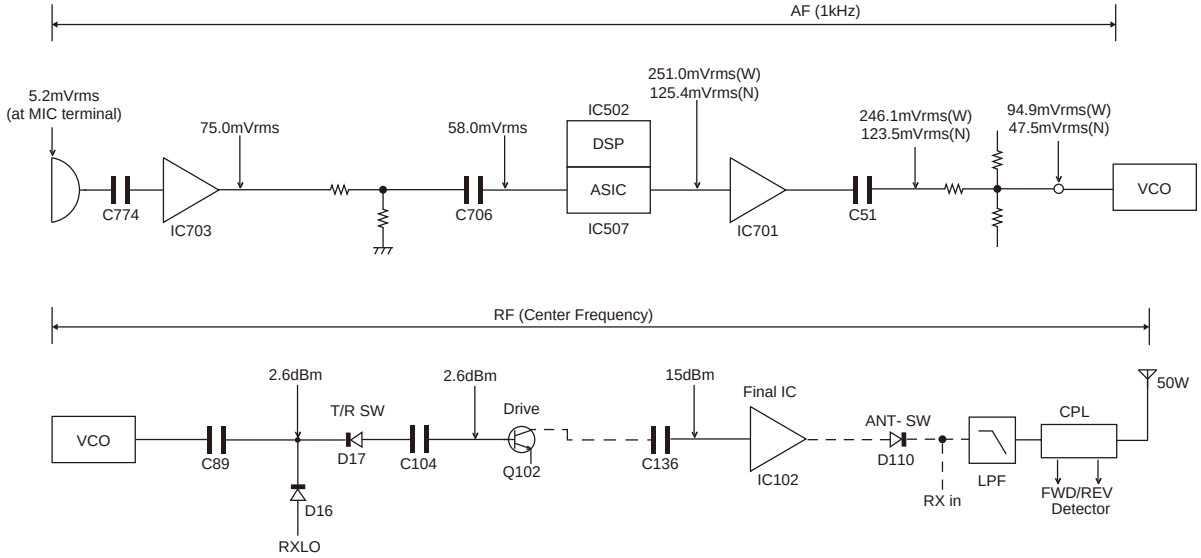

MIC input : 3kHz DEV.(Wide), 1.5kHz DEV.(Narrow) at 1kHz MOD.
Transmitting frequency : Center frequency

OPTIONAL ACCESSORIES

KRA-40 (GPS ACTIVE ANTENNA)

■ Specifications

Operating Temperature ....–22°F ~ +185°F (–30°C ~ +85°C)
Water Performance..... IPx7
Center Frequency 1575.42MHz
Output Impedance 50Ω
Dimensions (Cable not included)
..... 1.30 x 1.42 x 0.50 in (33 x 36 x 12.8 mm)
Cable length .....Approx. 5 m

■ External View

MEMO

NX-720H(G)/720H

SPECIFICATIONS

GENERAL

Frequency Range .....136~174MHz
Number of Channels.....260
Zones.....128
Max. Channels per Zone 250
Channel Spacing .....Analog: 12.5/15/25/30kHz Digital: 6.25/12.5kHz
Operating Voltage .....13.6V DC ±15%
Operating Temperature Range .....–22°F~+140°F (–30°C~+60°C)
Frequency Stability .....±1.0ppm
Antenna Impedance 50Ω
Dimensions (W x H x D) .....6.30 x 1.69 x 5.35 in. (160 x 43 x 136 mm)
(Projections not included)
Weight .....2.87 lbs. (1.30 kg)

RECEIVER

Sensitivity .....Digital @6.25kHz (3% BER): 0.20µV Digital @12.5kHz (3% BER): 0.28µV
Analog 12dB SINAD: 0.25µV
Selectivity .....Analog @25kHz: 80dB Analog @12.5kHz: 70dB
Intermodulation Distortion .....Analog: 70dB (±50, 100kHz)
Spurious Response .....Analog: 85dB
Audio Distortion .....Less than 3%
Audio Output 4W/4Ω

TRANSMITTER

RF Power Output 5-30-50W
Spurious Response 73dB
FM Hum and Noise (Typ).....Analog @25kHz: 50dB Analog @12.5kHz: 45dB
Modulation 16K0F3E, 11K0F3E, 8K30F1E, 8K30F1D, 8K30F7W, 4K00F1E, 4K00F1D, 4K00F7W, 4K00F2D

Analog measurements made per TIA/EIA 603 and specifications shown are typical.
JVC KENWOOD Corporation reserves the right to change specifications without prior notice or obligation.

JVC KENWOOD Corporation

3-12, Moriyacho, Kanagawa-ku, Yokohama-shi,
Kanagawa, 221-0022 Japan

Kenwood U.S.A. Corporation
P.O. BOX 22745, 2201 East Dominguez Street, Long Beach,
CA 90801-5745, U.S.A.

Kenwood Electronics Canada Inc.
6070 Kestrel Road, Mississauga, Ontario, Canada L5T 1S8

Kenwood Electronics Deutschland GmbH
Rembrücker Str. 15, 63150 Heusenstamm, Germany

Kenwood Electronics Belgium N.V.
Leuvensesteenweg 248 J, 1800 Vilvoorde, Belgium

Kenwood Electronics France S.A.
L'Etoile Paris Nord 2, 50 Allée des Impressionnistes,
Bp 58416 Villepinte, 95944 Roissy Ch De Gaulle Cedex

Kenwood Electronics UK Limited
Kenwood House, Dwight Road, Watford, Herts.,
WD18 9EB United Kingdom

Kenwood Electronics Europe B.V.
Amsterdamseweg 37, 1422 AC Uithoorn, The Netherlands

Kenwood Electronics Italia S.p.A.
Via G. Sirtori, 7/9 20129 Milano, Italy

Kenwood Ibérica, S.A.
Carretera de Rubi, 88 Planta 1 A 08174 Sant Cugat del Vallès
Barcelona, Spain

JVC KENWOOD Australia Pty. Ltd.
Talavera Business Park Building A, 4 Talavera Road,
North Ryde NSW 2113 Australia

Kenwood Electronics (Hong Kong) Ltd.
Suite 2504, 25/F, Tower 2, Nina Tower, No. 8 Yeung Uk Road,
Tsuen Wan, New Territories, Hong Kong

Kenwood Electronics Singapore Pte Ltd
1 Ang Mo Kio Street 63, Singapore 569110

NX-720H(G)/720H PC BOARD

PC BOARD NX-720H(G)/720H

DISPLAY UNIT (X54-3830-10) Component side view (J79-0345-09)

DISPLAY UNIT (X54-3830-10) Component side view (J79-0345-09)

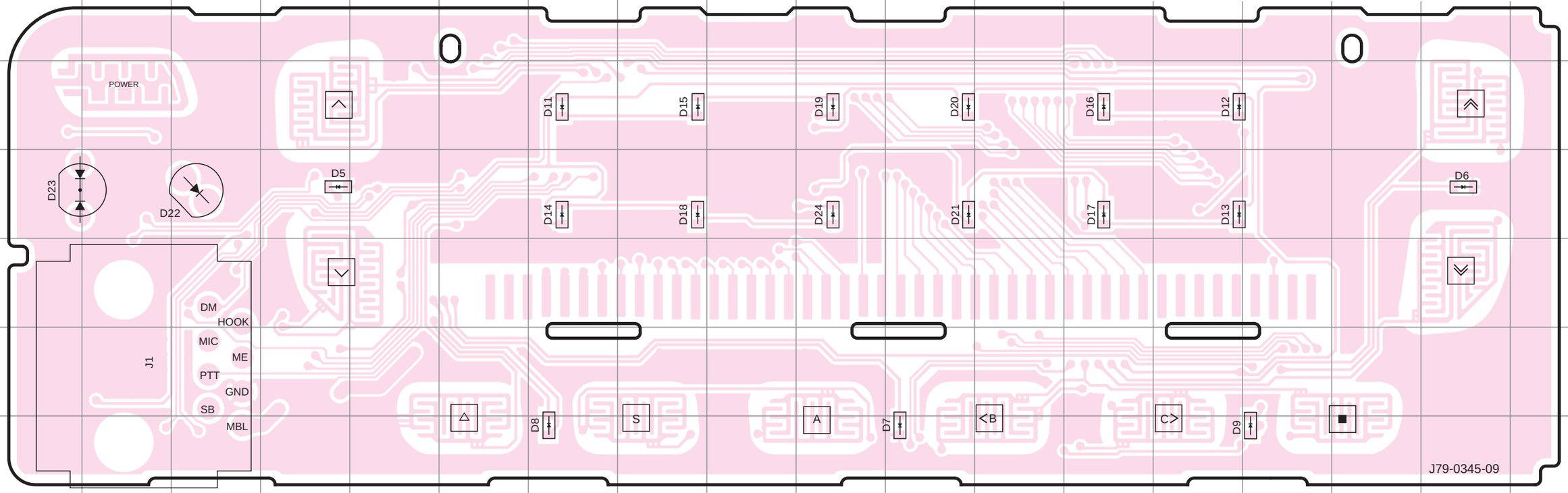

Ref. No.	Address
D5	4D
D7	7K
D8	7G
D9	7O
D11	3G
D12	3N
D13	4N
D14	4G
D15	3H
D17	4M
D16	3M
D18	4H
D19	3J
D21	4K
D20	3K
D22	4C
D23	4B

Component side
Layer 1
Layer 2
Foil side

DISPLAY UNIT (X54-3830-10) Foil side view (J79-0345-09)

DISPLAY UNIT (X54-3830-10) Foil side view (J79-0345-09)

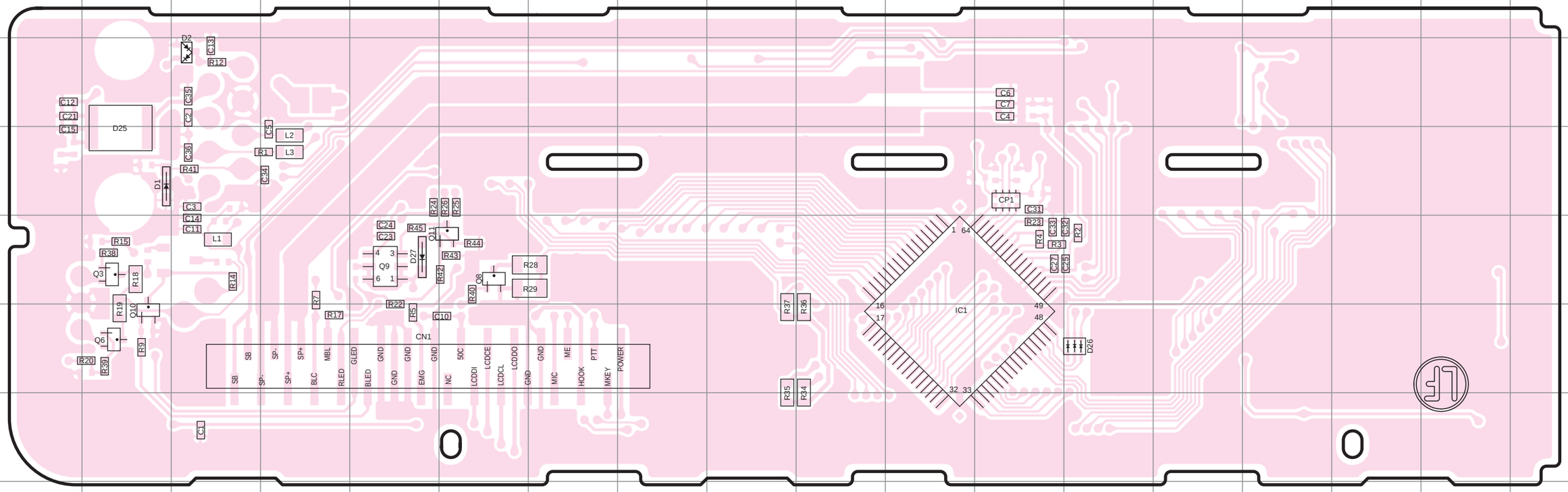

Ref. No.	Address
IC1	12K
Q3	11B
Q6	12B
Q8	11F
Q9	11E
Q10	12B
Q11	11F
D1	10B
D2	9C
D25	10B
D26	12M
D27	11E

Component side
Layer 1
Layer 2
Foil side

NX-720H(G)/720H PC BOARD

TX-RX UNIT (X57-8230-1X)
Component side view (J79-0343-09)

PC BOARD NX-720H(G)/720H
TX-RX UNIT (X57-8230-1X)
Component side view (J79-0343-09)

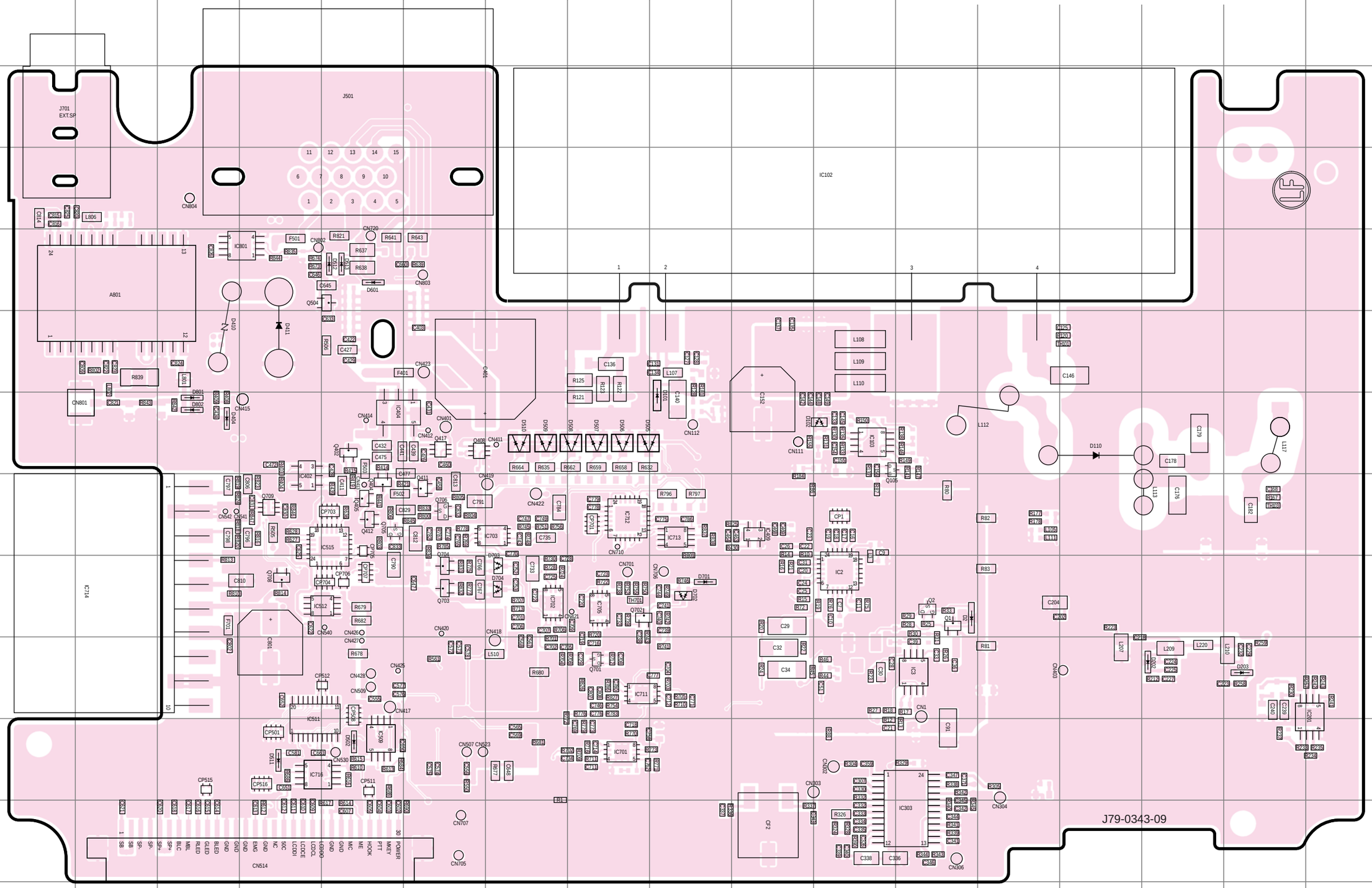

Ref. No.	Address	Ref. No.	Address
IC2	9K	Q702	9H
IC3	10L	Q703	9F
IC103	7K	Q704	9F
IC201	10Q	Q705	8E
IC303	11L	Q706	8F
IC402	8D	Q708	9D
IC404	7E	Q709	8D
IC409	8J	D2	9L
IC509	11E	D101	7I
IC511	10D	D102	7K
IC512	9E	D110	7N
IC515	8E	D202	10O
IC701	11H	D203	10P
IC702	9G	D404	7C
IC703	8G	D410	6C
IC705	9H	D411	6D
IC711	10H	D502	11E
IC712	8H	D505	7H
IC713	8I	D506	7H
IC716	11D	D507	7H
IC801	5D	D508	7H
Q1	9L	D509	7G
Q2	9L	D510	7G
Q105	7K	D511	11D
Q402	7E	D512	5E
Q404	8E	D513	5E
Q405	8E	D601	5E
Q408	7F	D701	9I
Q411	8F	D702	9I
Q412	8E	D703	9G
Q417	7F	D704	9G
Q504	5E	D801	7C
Q701	10H	D802	7C

Component side
Layer 1
Layer 2
Layer 3
Layer 4
Layer 5
Layer 6
Foil side

NX-720H(G)/720H PC BOARD

TX-RX UNIT (X57-8230-1X)
Foil side view (J79-0343-09)

PC BOARD NX-720H(G)/720H

TX-RX UNIT (X57-8230-1X)
Foil side view (J79-0343-09)

Ref. No.	Address	Ref. No.	Address
IC1	7R	Q502	3O
IC301	11M	Q503	3N
IC304	12H	D4	10H
IC401	8M	D5	10I
IC405	7O	D6	8I
IC406	9M	D7	10H
IC407	8P	D8	10J
IC408	8N	D9	10H
IC501	11P	D10	10H
IC502	9P	D11	10J
IC503	11Q	D12	10I
IC504	12Q	D13	8I
IC506	9N	D14	9J
IC507	10N	D15	10J
IC508	11M	D16	8H
IC513	8L	D17	8H
IC514	8L	D103	6E
IC516	7M	D104	5C
Q4	9J	D105	6E
Q5	8I	D106	6E
Q6	9I	D107	8E
Q7	9J	D108	10L
Q8	9I	D109	10L
Q9	9I	D111	7F
Q10	9H	D112	8F
Q11	8H	D113	8F
Q102	7K	D114	8F
Q106	7I	D204	9D
Q201	10G	D205	9E
Q202	9D	D206	9E
Q303	10K	D207	9E
Q305	11F	D401	6Q
Q401	6Q	D403	6P
Q403	5R	D405	9M
Q407	8O	D406	7N
Q409	9L	D407	7O
Q410	8O	D408	11L
Q414	11L	D409	11L
Q415	11L	D504	8L
Q416	11L	D705	5N
Q418	5Q	D706	5N
Q501	11M		

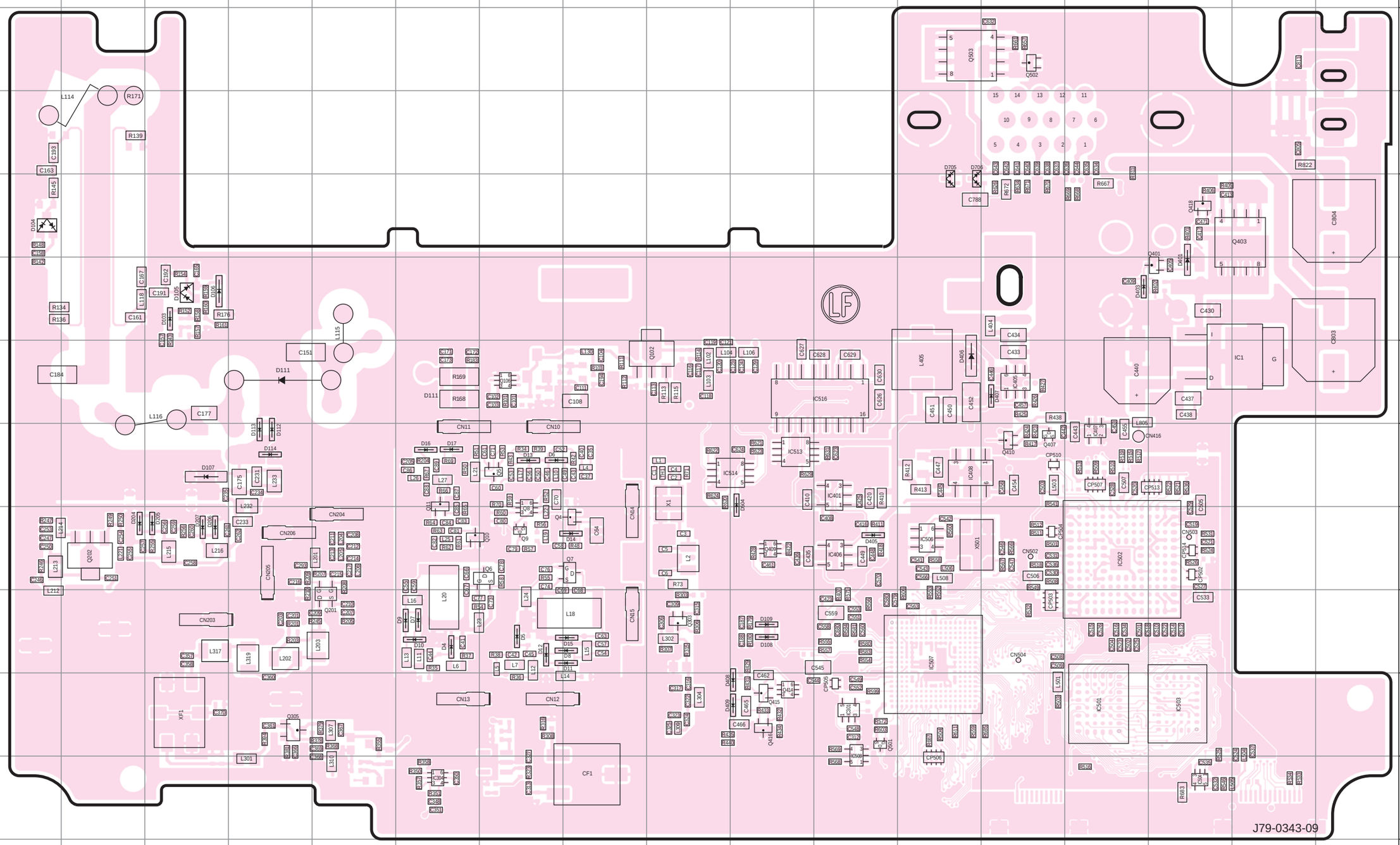

Component side
Layer 1
Layer 2
Layer 3
Layer 4
Layer 5
Layer 6
Foil side

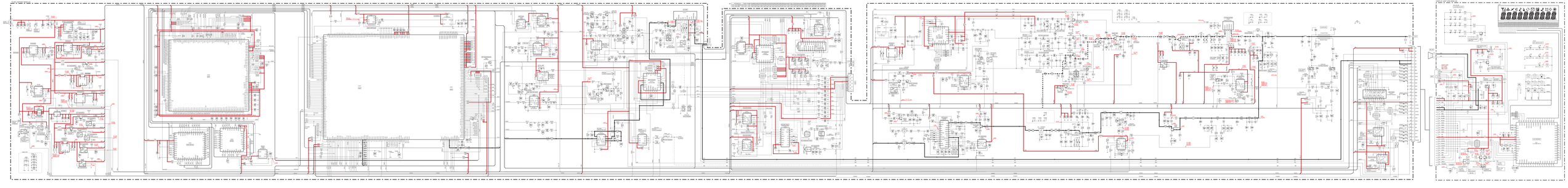
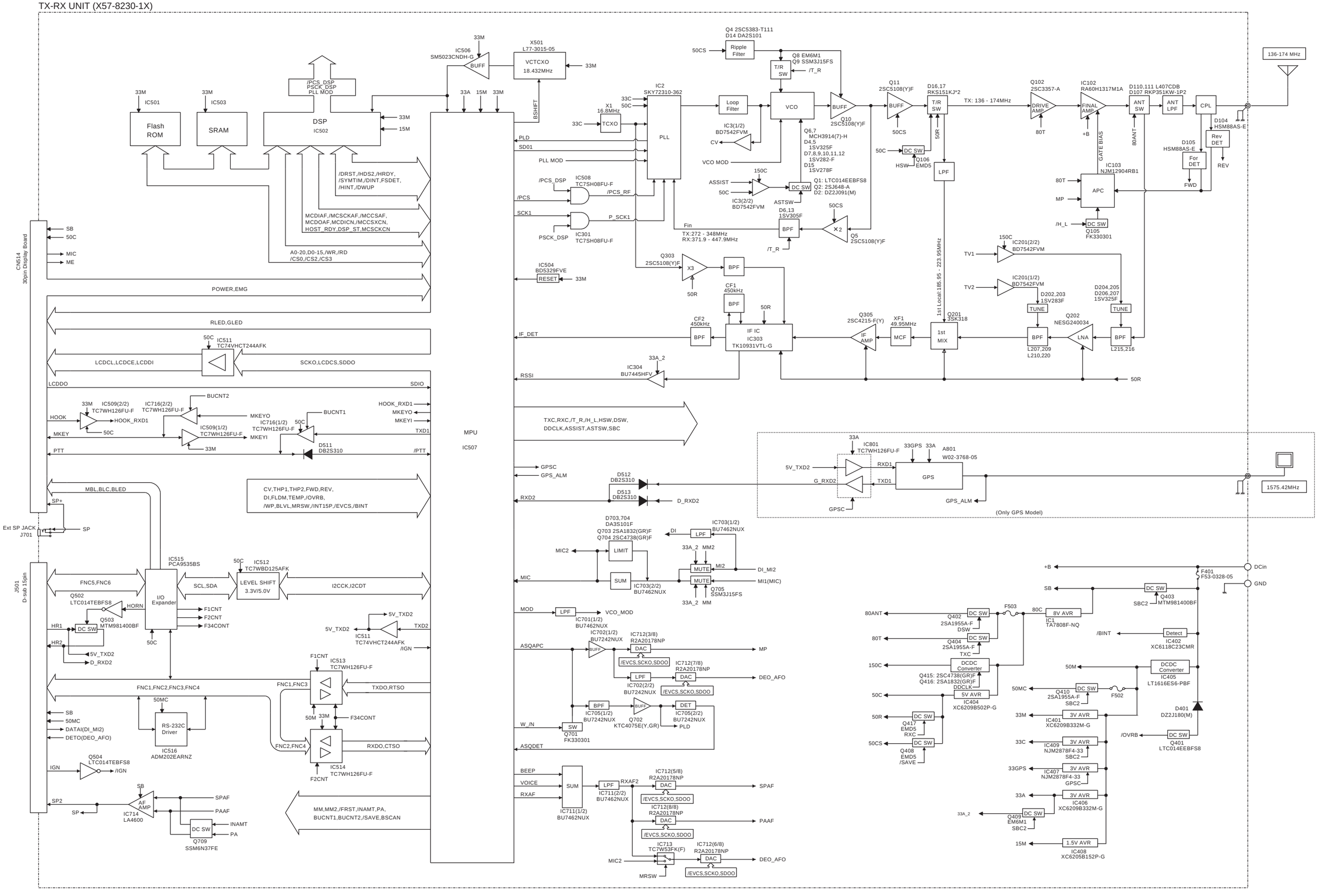
TX-RX UNIT (X57-8230-1X)