UHF DIGITAL BASE-REPEATER

NXR-810

SERVICE MANUAL

REVISED

KENWOOD

Kenwood Corporation

© 2010-7 PRINTED IN JAPAN
B51-8902-10 (N) 567

This service manual has been revised due to the addition of type K.
This service manual applies to products with B07xxxxx (NXR-810(K2)), or subsequent serial number.

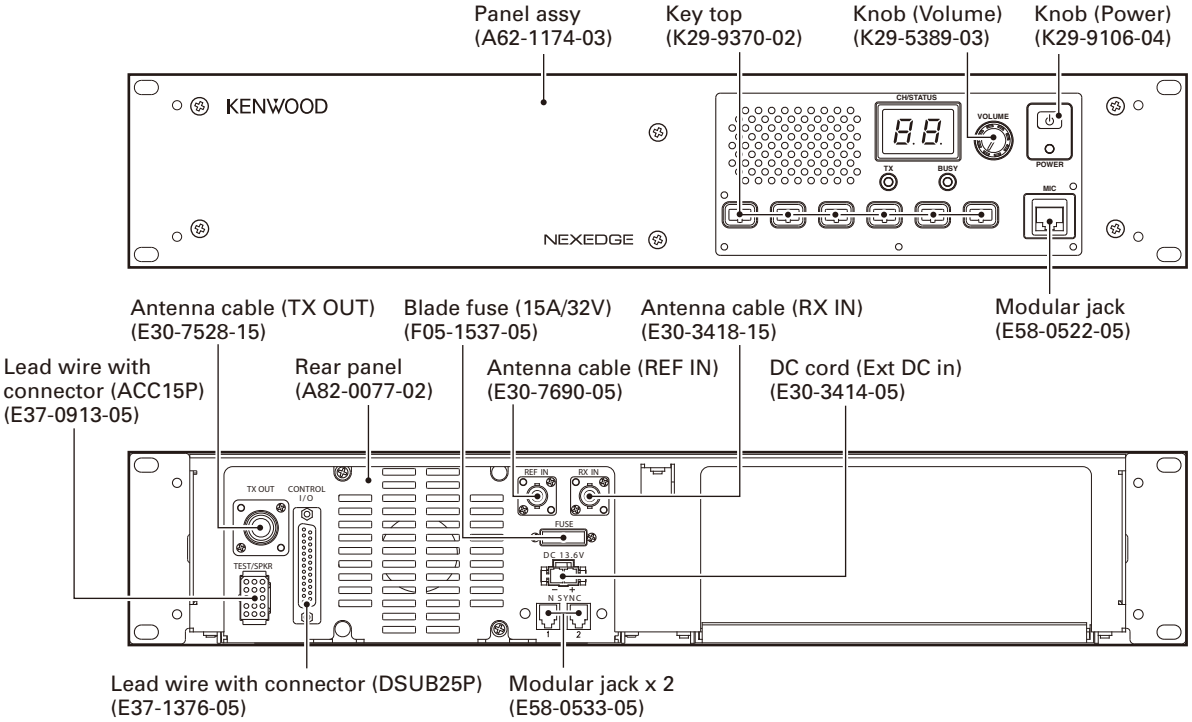

CONTENTS

GENERAL 2
SYSTEM SET-UP 3
REALIGNMENT 3
OPERATING FEATURES 5
INSTALLATION 6
MODIFICATION 8
DISASSEMBLY FOR REPAIR 9
CIRCUIT DESCRIPTION 10
COMPONENTS DESCRIPTION 19
PARTS LIST 21
EXPLODED VIEW 38
PACKING 40
TROUBLE SHOOTING 41
ADJUSTMENT 46
TERMINAL FUNCTION 60
PC BOARD
FINAL UNIT (X45-3930-XX) 68
CONTROL UNIT (X53-4490-10) 72
DISPLAY UNIT (X54-3730-20) 76
TX-RX UNIT (X57-7950-XX) 80
RX VCO/PLL UNIT (X58-5090-XX) 84
TX VCO/PLL UNIT (X58-5100-XX) 85
INTERCONNECTION DIAGRAM 86
SCHEMATIC DIAGRAM 88
BLOCK DIAGRAM 106
OPTIONAL ACCESSORIES
KES-5 (EXTERNAL SPEAKER) 109
SPECIFICATIONS ..... BACK COVER

This product complies with the **RoHS** directive for the European market.

This product uses Lead Free solder.

Document Copyrights

Copyright 2010 by Kenwood Corporation. All rights reserved.

No part of this manual may be reproduced, translated, distributed, or transmitted in any form or by any means, electronic, mechanical, photocopying, recording, or otherwise, for any purpose without the prior written permission of Kenwood.

Disclaimer

While every precaution has been taken in the preparation of this manual, Kenwood assumes no responsibility for errors or omissions. Neither is any liability assumed for damages resulting from the use of the information contained herein. Kenwood reserves the right to make changes to any products herein at any time for improvement purposes.

Firmware Copyrights

The title to and ownership of copyrights for firmware embedded in Kenwood product memories are reserved for Kenwood Corporation. Any modifying, reverse engineering, copy, reproducing or disclosing on an Internet website of the firmware is strictly prohibited without prior written consent of Kenwood Corporation. Furthermore, any reselling, assigning or transferring of the firmware is also strictly prohibited without embedding the firmware in Kenwood product memories.

Transceivers containing AMBE+2™ Vocoder:

The AMBE+2™ voice coding technology is embedded in the firmware under the license of Digital Voice Systems, Inc.

GENERAL

INTRODUCTION

SCOPE OF THIS MANUAL

This manual is intended for use by experienced technicians familiar with similar types of commercial grade communications equipment. It contains all required service information for the equipment and is current as of the publication date. Changes which may occur after publication are covered by either Service Bulletins or Manual Revisions. These are issued as required.

ORDERING REPLACEMENT PARTS

When ordering replacement parts or equipment information, the full part identification number should be included. This applies to all parts: components, kits, or chassis. If the part number is not known, include the chassis or kit number of which it is a part, and a sufficient description of the required component for proper identification.

PERSONAL SAFETY

The following precautions are recommended for personal safety:

- DO NOT transmit if someone is within two feet (0.6 meter) of the antenna.
- DO NOT transmit until all RF connectors are secure and any open connectors are properly terminated.
- SHUT OFF this equipment when near electrical blasting caps or while in an explosive atmosphere.
- All equipment should be properly grounded before powerup for safe operation.
- This equipment should be serviced by only qualified technicians.

SERVICE

This transceiver is designed for easy servicing. Refer to the schematic diagrams, printed circuit board views, and alignment procedures contained within.

Service Manual List

Title	Parts number	Remarks	Market code	Final unit number	Control unit number	Display unit number	TX-RX unit number	RX VCO/PLL unit number	TX VCO/PLL unit number
NXR-810	B51-8902-00	First edition	K2	X45-3930-10 (J79-0264-09)	X53-4490-10 (J79-0277-09)	X54-3580-20 (J79-0035-09)	X57-7950-10 (J79-0266-09)	X58-5090-10 (J79-0269-09)	X58-5100-10 (J79-0270-09)
NXR-810	B51-8902-10	Revised This service manual (K2: S/No. B07xxxxx)	K,K2	X45-3930-XX (J79-0264-19)	X53-4490-10 (J79-0277-09)	X54-3730-20 (J79-0295-09)	X57-7950-XX (J79-0266-19)	X58-5090-XX (J79-0269-09)	X58-5100-XX (J79-0270-09)

SYSTEM SET-UP

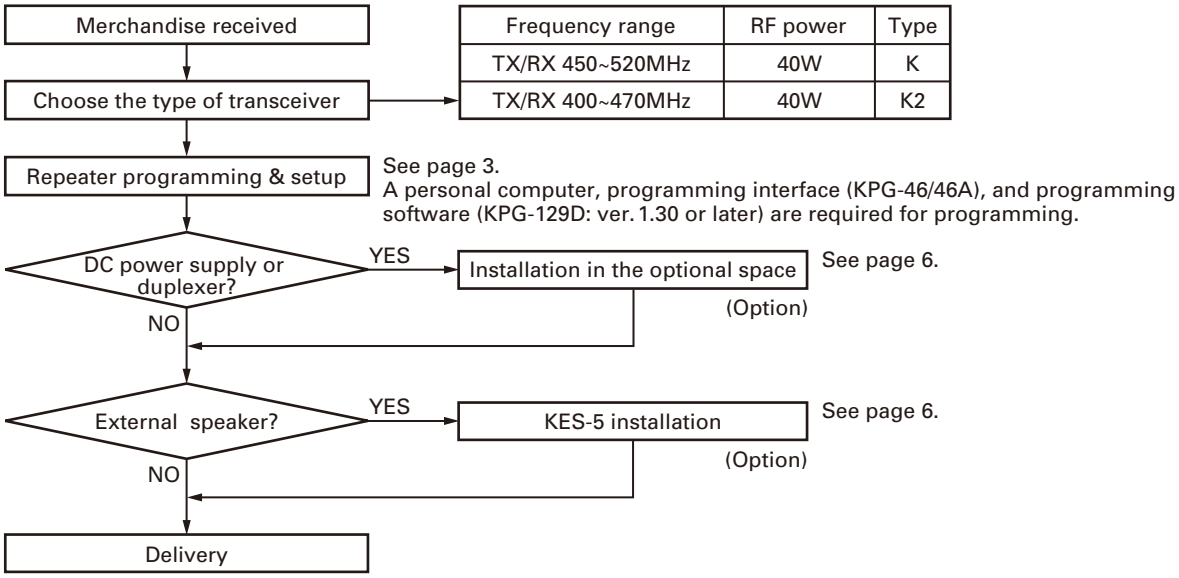

Frequency range	RF power	Type
TX/RX 450~520MHz	40W	K
TX/RX 400~470MHz	40W	K2

REALIGNMENT

1. Modes

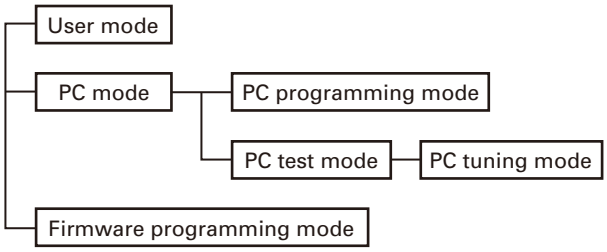

Mode	Function
User mode	Use this mode for normal operation.
PC mode	Use this mode to make various settings by means of the FPU through the RS-232C port.
PC programming mode	Use to read and write frequency data and other features to and from the repeater.
PC test mode	Use to check the repeater using the PC. This feature is included in the FPU.
Firmware programming mode	Use when changing the firmware program of the flash memory.

2. How to Enter Each Mode

Mode	Operation
User mode	Power ON
PC mode	Received commands from PC
Firmware programming mode	[PF1] + Power ON (one second)

3. PC Mode

3-1. Preface

The NXR-810 is programmed by using a personal computer, programming interface (KPG-46/46A) and programming software (KPG-129D: ver. 1.30 or later).

The programming software can be used with a PC. Figure 1 shows the setup of a PC for programming.

3-2. Connection Procedure

1. Connect the NXR-810 to the computer using the interface cable and USB adapter (When the interface cable is KPG-46A, the KCT-53U can be used.).

Note:

- You must install the KCT-53U driver in the computer to use the USB adapter (KCT-53U).
- When using the USB adapter (KCT-53U) for the first time, plug the KCT-53U into a USB port on the computer with the computer power ON.

2. When power is applied, the user mode is entered immediately. When the PC sends a command, the repeater enters the PC mode and displays "PC" on the 7-segment LED. When data is being transmitted to the PC from the repeater, the TX LED flashes. The BUSY LED flashes when data from the PC is being received by the repeater.

Note:

- The data stored in the personal computer must match the model type, when it is written into the flash memory.
- Change the NXR-810 to PC mode, then attach the interface cable.

REALIGNMENT

3-3. KPG-46/KPG-46A Description (PC programming interface cable: Option)

The KPG-46/46A is required to interface the NXR-810 to the computer. It has a circuit in its D-sub connector (KPG-46: 25-pin, KPG-46A: 9-pin) case that converts the RS-232C logic level to the TTL level.

The KPG-46/46A connects the 8-pin microphone connector of the NXR-810 to the RS-232C serial port of the computer.

3-4. KCT-53U Description (USB adapter: Option)

The KCT-53U is a cable which connects the KPG-46A to a USB port on a computer.

When using the KCT-53U, install the supplied CD-ROM (with driver software) in the computer. The KCT-53U driver runs under Windows 2000, XP or Vista (32-bit).

3-5. Programming Software KPG-129D Description

The KPG-129D is the programming software for the transceiver supplied on a CD-ROM. This software runs under Windows XP, Vista or 7 on a PC.

The data can be input to or read from the NXR-810 and edited on the screen. The programmed or edited data can be printed out. It is also possible to tune the NXR-810.

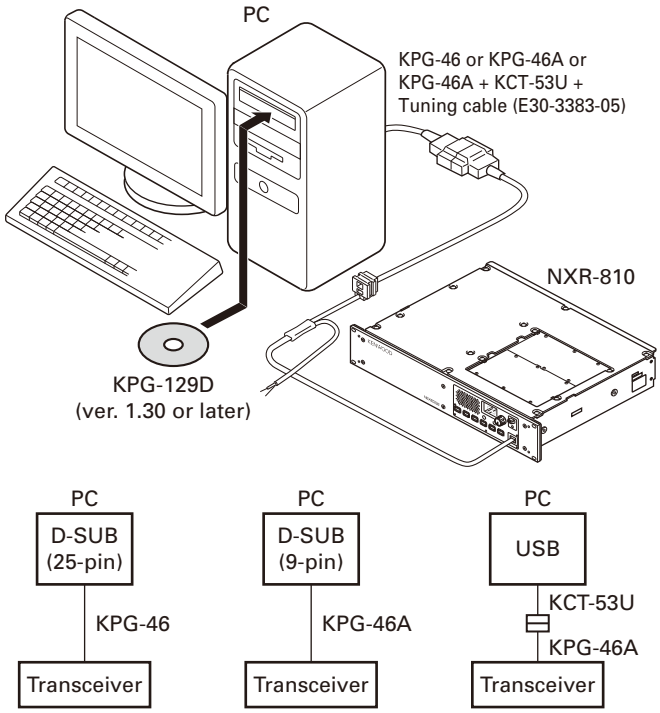

Fig. 1

4. Firmware Programming Mode

4-1. Preface

The NXR-810 uses flash memory to allow it to be easily upgraded when new features are released in the future.

4-2. Connection Procedure

Connect the NXR-810 to the personal computer using the interface cable (KPG-46/46A) and USB adapter (KCT-53U: when the interface cable is KPG-46A, the KCT-53U can be used.). (Connection is the same as in the PC Mode.)

Note:

You can only program firmware from the 8-pin microphone connector on the front panel. Using the 25-pin logic interface on the rear panel will not work.

4-3. Programming

1. Start up the firmware programming software (Fpro.exe (ver. 4.1 or later)). The Fpro.exe exists in the KPG-129D installed folder.
2. Set the communications speed (normally, 115200 bps) and communications port in the configuration item.
3. Set the firmware to be updated by File name item.
4. Turn the NXR-810 power ON with the [PF1] key held down. Then, "P.G." is displayed.
5. Check the connection between the NXR-810 and the personal computer, and make sure that the NXR-810 is in the Program mode.
6. Press write button in the window. When the NXR-810 starts to receive data.
7. If writing ends successfully, the TX LED on the NXR-810 lights.
8. If you want to continue programming other NXR-810s, repeat steps 4 to 7.

Note:

This mode cannot be entered if the Firmware Programming mode is set to Disable in the Programming software.

4-4. Function

If you press the [PF6] key while "P.G." is displayed, the display changes to "PG" to indicate that the write speed is low speed (38400 bps). If you press the [PF6] key again while "PG" is displayed, the display changes to "P.G." to indicate that the write speed is mid speed (57600 bps). If you press the [PF6] key again while "P.G." is displayed, the display changes to "P.G." to indicate that the write speed is high speed (115200 bps).

Note:

Normally, write in the high-speed mode.

OPERATING FEATURES

1. Two 7-segment LED Displays

- Channel display (1~30): While operating normally in user mode.

- When the displayed channel is contained in scan sequence, the right side decimal point is displayed.

- When the displayed channel is the priority channel, the left side decimal point is displayed.

- "PC" is displayed while in PC mode.

- "PG" is displayed while in firmware programming mode.
  2 decimal points displayed = 115,200 bps
  1 decimal point displayed = 57,600 bps
  No decimal = 38,400 bps

- "E1" is displayed when FPU data is not written.

- "E2" is displayed when the channel data is not written.

- "E3" is displayed when PLL is unlocked.
  Receiver PLL unlocked = BUSY LED blinks.
  Transmitter PLL unlocked = TX LED blinks.

- "E4" is displayed when PTT is attempted on a channel number that has no TX frequency data programmed.

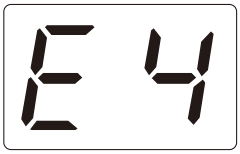

- "SC" is displayed while in scan mode.

- "E5" is ESN blank error.

- "E.6." is MCU internal RAM error.

- "E6." is DSP RAM error.

- "E6" is MCU External RAM error.

INSTALLATION

1. External Speaker (KES-5)

The NXR-810 has a built-in speaker (5W/8Ω), and the external speaker output from the TEST/SPKR connector (15-pin) on the rear of the radio is 4W/4Ω. Use external speaker KES-5.

1-1. Connection for the KES-5 with the NXR-810

■ When taking the AF output from the TEST/SPKR connector (15-pin) on the rear of the radio

The following tools are required for changing the connector.

• Extracting tool

The following extracting tool is recommended:
Molex Inc. Order No.: 11-03-0002 (W05-0878-00)

1. Remove the connector with jumper from the external speaker connector on the rear panel of the radio. (Fig.1-1)
   Note: Save the jumper, which is required when the radio is used without the external speaker.
2. Remove the terminals with the jumper from the connector housing holes number 9 and 12 using the extracting tool.
   Removing the jumper lead (Fig. 1-2)
   1) Insert the extracting tool (11-03-0002) into the connector while pushing the jumper lead in the direction of (a).
   2) Push the extracting tool in to collapse the barbs of the crimp terminal.
   3) Pull out the lead while continuing to push the extracting tool in the direction (b).
3. Reinsert the terminal with the black and white stripe lead into hole number 12, and the terminal with the black lead into hole number 6. (Fig. 1-3)
4. Attach the connector to the external speaker connector on the radio.

Note:

Relationship between the TEST/SPKR connector (15-pin) connection and speaker output:

- When pins 9 and 12 are shorted: The built-in speaker is used.
- When pins 9 and 12 are open and output is from pins 6 and 12: KES-5 is used.

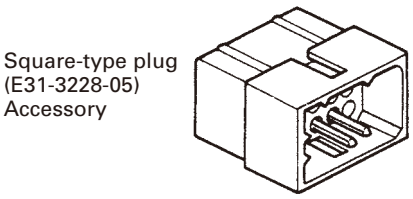

Fig. 1-1

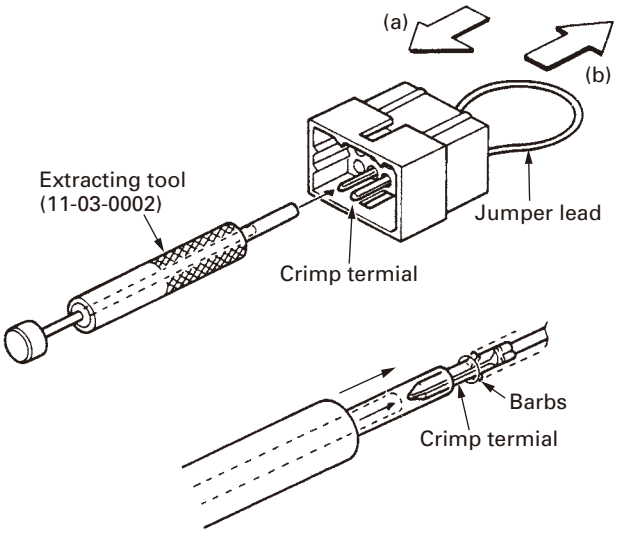

Fig. 1-2

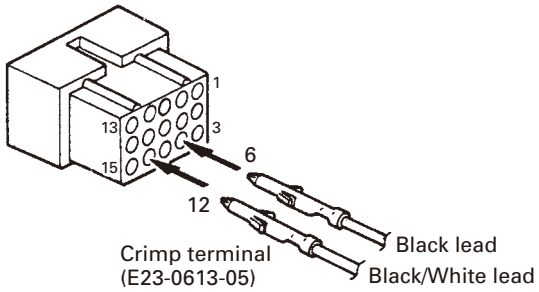

Fig. 1-3

2. Accessory Cabinet

You can install optional accessories, such as a DC power supply or duplexers, in the accessory cabinet.

1. Place the optional accessory in the cabinet as shown below.
2. If necessary, attach cushions (G13-1801-04 and/or G13-1802-04) to the top plate (J21-8559-04) in order to adjust the space between the cabinet and the top plate. Then, insert the 3 tabs of the plate into the slots in the side of the cabinet. High, middle, or low positions are available. To affix the plate, inset and tighten the 2 screws on the other side of the plate.

You can also flip the top plate upside-down to adjust the height of the cabinet space.

INSTALLATION

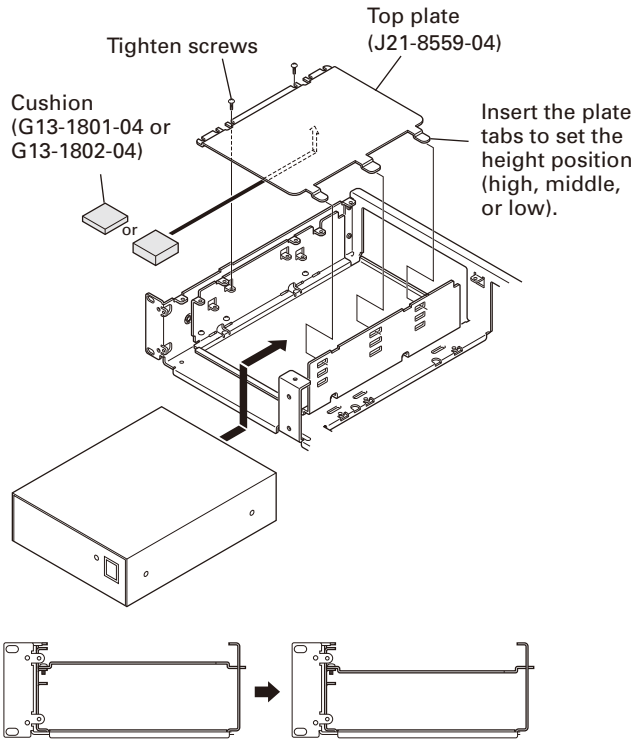

Fig. 2

3. Key Cover

To avoid accidentally pressing the keys, you can install the key cover.

1. Install and fix the key protector using the 5 supplied screws (N35-3006-43).

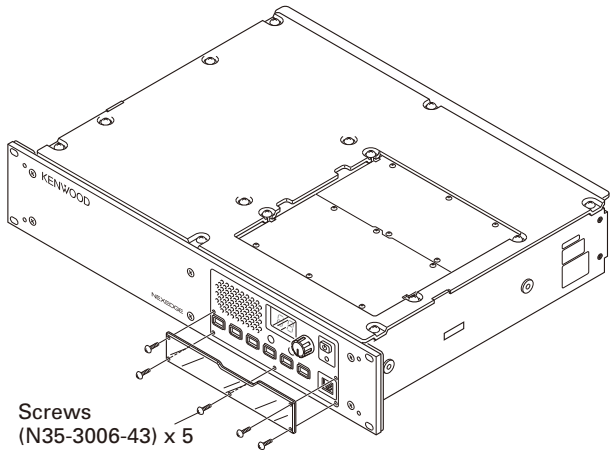

Fig. 3

4. Desktop Repeater

When you use the repeater on a desktop, attach the 4 spacers to the base of the repeater as shown in the figure. With these spacers attached, the front panel will not touch the desk surface.

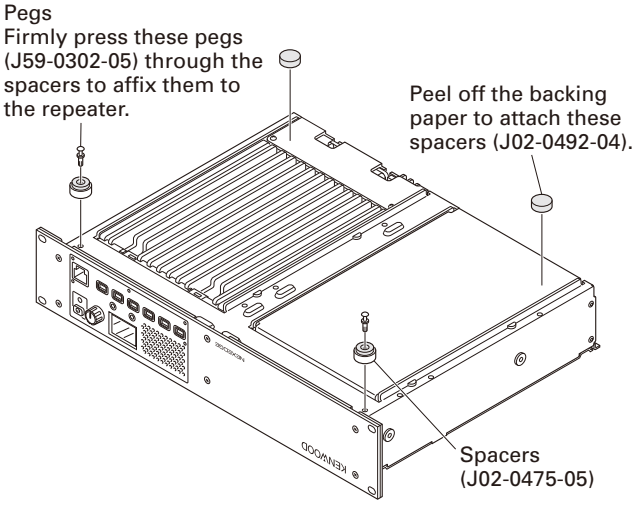

Fig. 4

5. Installing Name Plates

Punch out the name plate card. Then insert the plates onto the relative function keys.

You can reconfigure the name plates at any time.

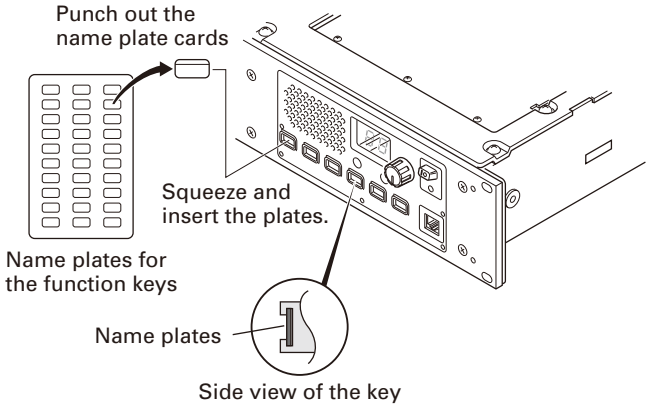

Fig. 5

MODIFICATION

1. DC Source Switch

To prevent the power supply from turning off due to misoperation of the DC source switch on the front panel or accidents (tampering) after installation, the main unit can be kept on regardless of the on/off setting of the DC source switch on the front panel.

Using solder, short the PSW land near the CN40 connector.

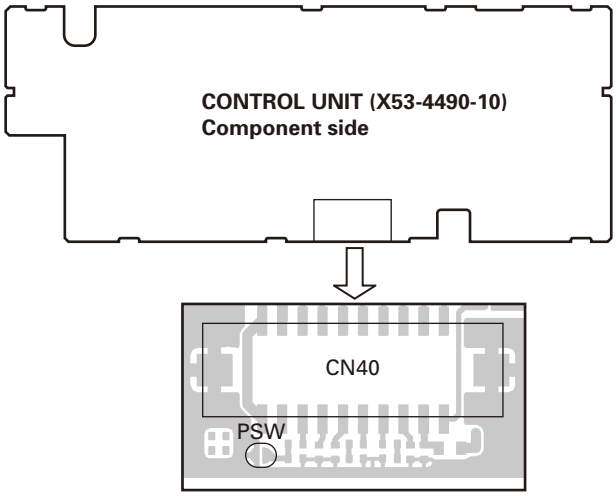

2. Single Antenna

The NXR-810 can be used as a base station by sharing an external antenna connector for both transmitting and receiving data.

2-1. Modification

1. Using a soldering iron, delete C76 and add C73 and C78 (100pF; C93-0572-05) on the Final unit (A/3).

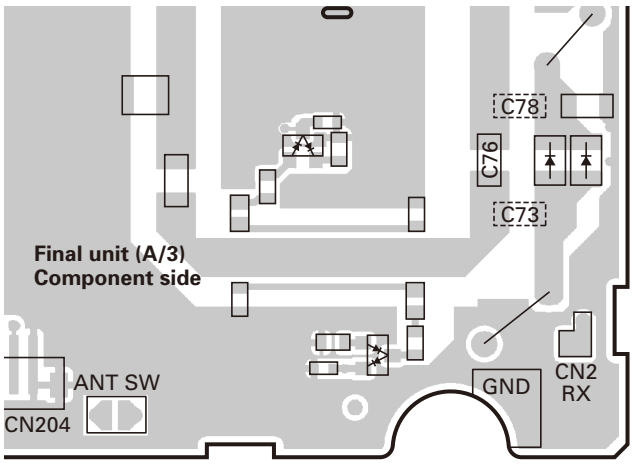

2. Short-circuit the printed pattern of ANT SW near the CN204 connector by soldering.
3. Disconnect the pin connector from CN101 of the TX-RX unit.
   Remove the two screws used for securing the BNC connector on the back panel of the unit. Detach the antenna cable assy. (E30-3418-15)
4. Cut off the coaxial cable of the removed antenna cable assy on the BNC connector side.
   Strip off the insulation of the cut-off coaxial cable to prepare it to be soldered.

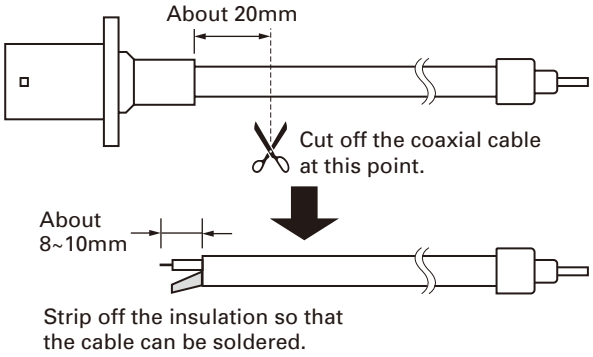

2-2. Connection

1. Solder the coaxial cable to the Final unit (A/3).
2. Connect the pin connector of the coaxial cable to CN101 of the TX-RX unit.

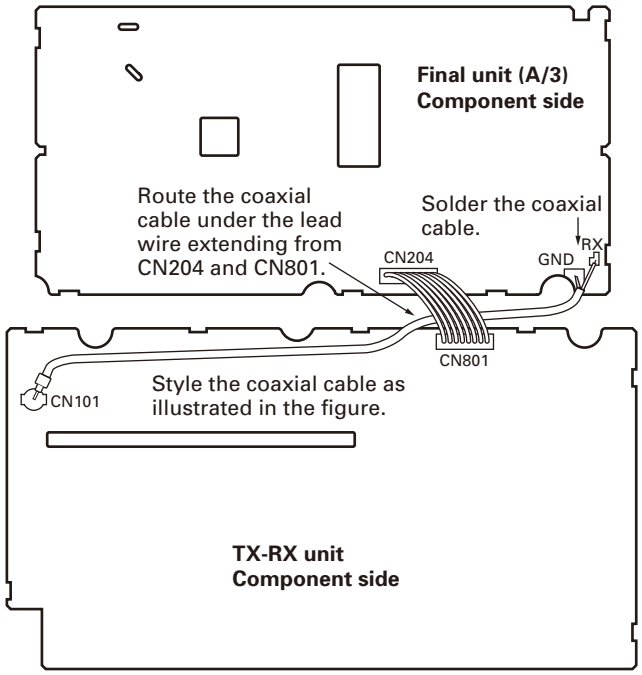

2-3. Setting the FPU

Set the channel to be used as "Simplex" using the FPU. Check and readjust the transmit power if needed.

DISASSEMBLY FOR REPAIR

1. How to Remove the Panel Assy (ABS)

Note: You can remove the panel assembly (ABS) without removing the top panel (A62-1148-03).

1. To remove the panel (TX-RX, ②), loosen the 6 screws (①).
2. To remove the panel assembly (Front, ④), loosen the 6 screws (③).
3. The panel assembly (ABS) is securely fastened by 4 tabs (⑤) on the top and bottom. You can remove the panel assembly by pulling to the front while you are pulling up the tabs.

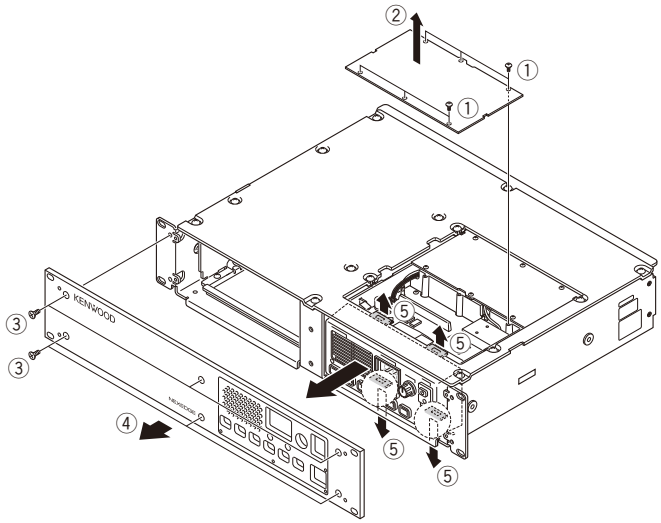

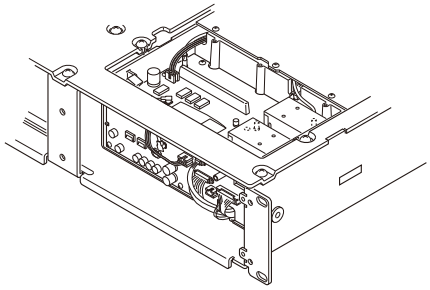

CIRCUIT DESCRIPTION

1. Outline

The NXR-810 is a UHF repeater designed to operate in the frequency range of 450 to 520MHz (K) or 400 to 470MHz (K2).

2. TX-RX unit

TX-RX unit (X57-795) consists of the following circuit.

(1) Internal/external reference circuit
(2) Transmitter reference 16.8MHz PLL circuit
(3) Transmitter main PLL circuit
(4) Modulation level adjustment circuit
(5) Front-end circuit
(6) 1st-Mixer circuit
(7) IF circuit
(8) Receiver PLL circuits
(9) AVR circuits
(10) Other circuits

2-1. Internal/External reference circuit

The internal reference circuit consists of X500, Q502, Q504 and D505. The output of 19.2MHz VCTCXO (X500) is fed to buffer amplifier Q502. The higher harmonic wave is attenuated by the LPF. This reference signal is fed to IF IC (IC304) as the 2nd Local signal through the Tripler.

The internal reference signal is amplified by Q504 to achieve the needed level for PLL ICs. That signal is divided by a Wilkinson divider. The divided signal is fed to the PLL IC for the receiver. Another signal is fed to the transmitter reference 16.8MHz PLL IC through PIN diode switch (D505) which switches the Internal or external reference.

The external reference circuit consists of CN500, Q501, Q503, IC500, IC501, D503 and D504. The external reference signal (10MHz/0dBm) input from CN500 is fed to buffer amplifier Q501 and is amplified by Q503. Q503 is a dual gate MOS-FET. The output of amplifier (Q503) is detected by D503 and that DC voltage is amplified by IC500 (B/2). The amplified DC voltage is compared to the reference voltage by IC500 (A/2). The difference of voltages is amplified by IC500 (A/2) and is fed to the gate-2 terminal of Q503. The voltage of the Q503 gate-2 terminal is controlled automatically to constantly maintain the power output of amplifier (Q503). The output of amplifier (Q503) is fed to the transmitter reference 16.8MHz PLL IC through the PIN diode switch (D504) which switches the Internal or External reference.

The PIN diode switches (D504, D505) are controlled by the I/O expander IC (IC805 Pin15). The I/O expander IC is controlled by the MCU which is in the Control unit (X53-449). If internal reference is selected by the FPU, the I/O expander IC outputs an "H" status. This signal sets power switch Q506 to ON. Then D505 is activated.

If external reference is selected, the I/O expander IC outputs an "L" status. This signal sets power switch Q500 to ON. Then D504 is activated.

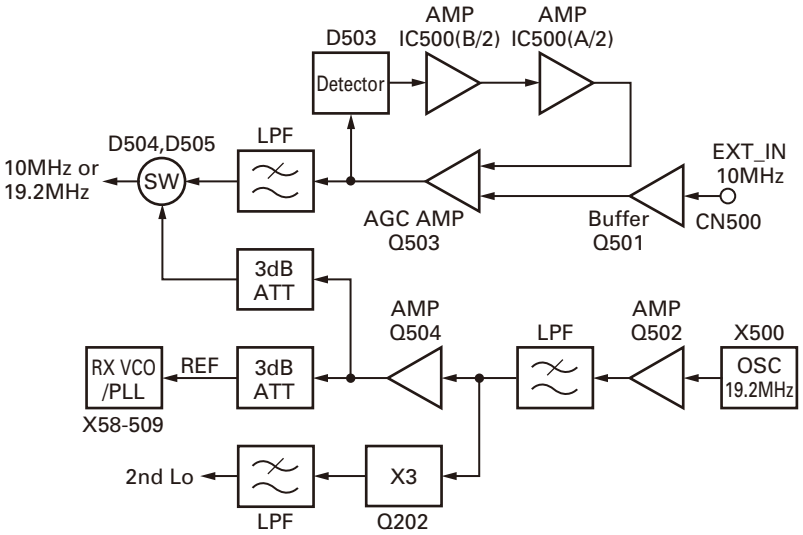

Fig. 1 Internal/external reference circuit

2-2. Transmitter reference 16.8MHz PLL circuit

The transmitter reference 16.8MHz PLL circuit produces the reference frequency signal for the Transmitter Main PLL circuit and modulates the low-frequency components.

The circuit consists of IC600, IC601, IC602, IC603, IC604, Q601, Q602, Q603, and X600.

The VCXO (X600) signal enters the buffer amplifier Q603 and is amplified by Q602. The higher harmonic wave is attenuated by the LPF and returns to IC602. Its phase is compared with that of the reference frequency 5kHz.

The phase difference signal produced by the comparing phase is converted to a DC voltage by a lag-lead type loop filter. This DC voltage is input to the IC604 invert amplifier and is synthesized with the modulating signal. This DC voltage is input to the X600 control voltage terminal for controlling the VCXO oscillating frequency 16.8MHz.

The 16.8MHz oscillating signal is fed to the Q603 buffer amplifier. The output signal of the buffer amplifier is used as the reference frequency signal of the transmitter main PLL circuit.

CIRCUIT DESCRIPTION

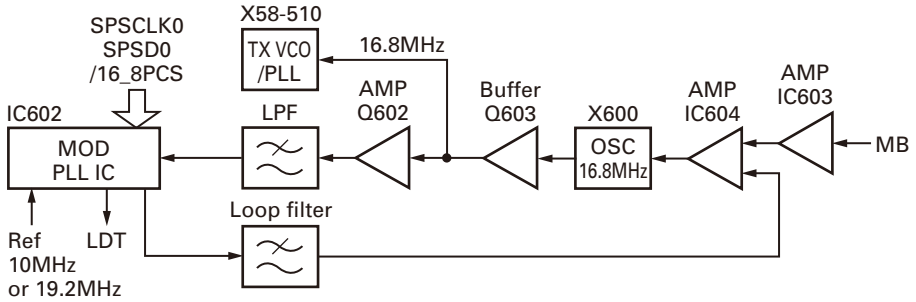

Fig. 2 Transmitter reference 16.8MHz PLL circuit

2-3. Transmitter Main PLL circuit (SUB unit)

■ VCO

The TX VCO circuit consists of two VCOs (VCO A X58-510: Q352, VCO B X58-510: Q353). Those VCOs generates a transmit carrier. VCO A Q352 produces a transmitter frequency from 450.000MHz to 484.995MHz (K), 400.000MHz to 434.995MHz (K2). VCO B Q353 produces a transmitter frequency from 485.000MHz to 520.000MHz (K), 435.000 MHz to 470.000MHz (K2).

Those VCO oscillation frequencies are determined by two systems of voltage control terminals: "CV" and "TXASSIST".

The voltage control terminals, "CV" and "TXASSIST", are controlled by the PLL IC (X58-510: IC300) and MCU (X53-449: IC20) and the output frequency changes continuously according to the applied voltage. For the modulation input terminal, "MO", the output frequency changes according to the applied voltage.

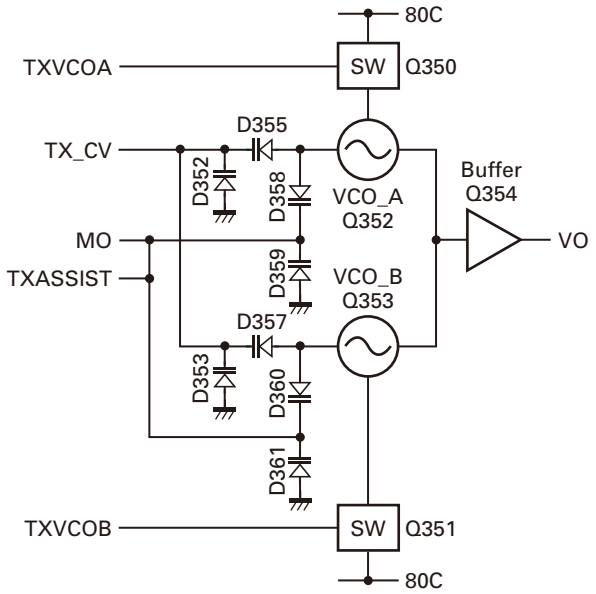

Fig. 3 Transmitter VCO circuit

■ PLL IC (X58-510: IC300)

The PLL IC compares the differences in phases of the VCO oscillation frequency and the transmitter PLL reference signal (16.8MHz), returns the difference to the VCO CV terminal and realizes the "Phase Locked Loop" for the return control. This allows the VCO oscillation frequency to accurately match (lock) the desired frequency.

When the frequency is controlled by the PLL, the frequency convergence time increases as the frequency difference increases when the set frequency is changed. To supplement this, the MCU is used before control by the PLL IC to bring the VCO oscillation frequency close to the desired frequency. As a result, the VCO CV voltage does not change and is always stable at approx. 3.0V.

The desired frequency is set for the PLL IC by the MCU (X53-449: IC20) through the 3-line "SPSD0", "SPSCLK0", "/TXPCS" serial bus. Whether the PLL IC is locked or not is monitored by the MCU through the "LDT" signal line. If the VCO is not the desired frequency (unlock), the "LDT" logic is low.

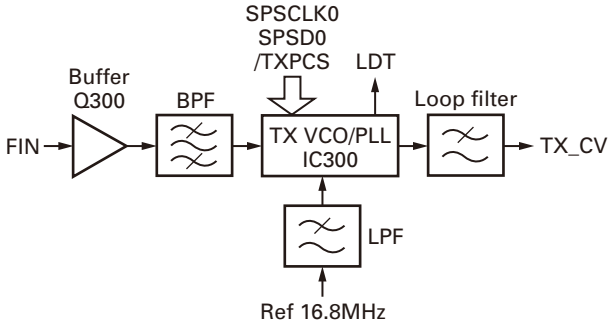

Fig. 4 Transmitter Main PLL circuit

2-4. Modulation level adjustment circuit

The Modulation level adjustment circuit adjusts the modulation waveform balance. This circuit consists of IC804, IC603, IC604, IC605 and IC606.

The modulating signal comes from the Control unit (X53-449) through the interface connector (CN800 Pin 14). The modulating signal is produced by the modulation low-pitched tone to the transmitter modulation 16.8MHz PLL circuit and adds the high-pitched modulation to the transmitter main PLL.

IC804 is an electronic volume control IC. It has 8 electronic volume control circuits. The modulation level adjustment circuit uses 2 electronic volume control circuits in IC804. The 1st electronic volume control circuit adjusts the modulating signal and is fed to IC603 and the 2nd electronic

CIRCUIT DESCRIPTION

volume control circuit. The 2nd electronic volume control circuit adjusts the modulating signal and is fed to IC606.

IC603 is an inverting amplifier for inverting the amplification of the modulating signal. The output of IC603 and the charge pump output of IC602 (Transmitter modulation 16.8MHz PLL IC) are synthesized by IC604 and is fed to VCXO (X600).

IC606 is a non-inverting amplifier. The output of the 2nd electronic volume control circuit is amplified by IC606 and is fed to the transmitter main PLL circuit.

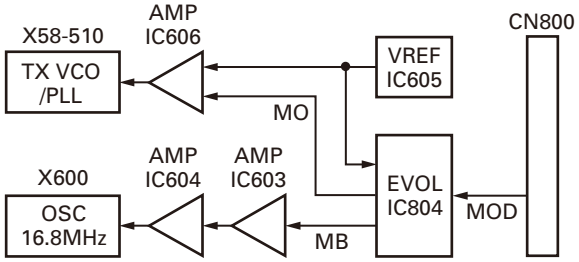

Fig. 5 Modulation level adjustment circuit

2-5. Front-end circuit

The front-end circuit consists of former LPF, former BPF (D105, D106, D107 and D108), RF Low Noise Amplifier (Q101), latter BPF (D100, D101, D103 and D104), and latter LPF. The BPF covers frequency ranges 450 to 520MHz (K), 400 to 470MHz (K2).

The former LPF, former BPF, latter BPF, and latter LPF attenuate the unwanted signals and send only the necessary signal to the first mixer.

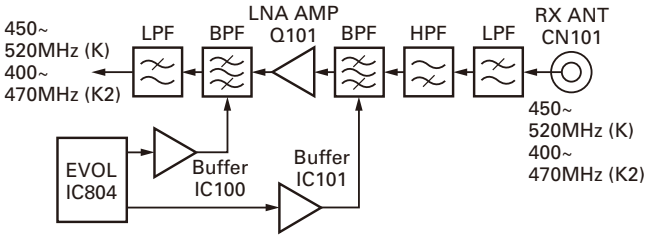

Fig. 6 Front-end circuit

2-6. 1st-Mixer circuit

The filtered signal from the front-end circuit is heterodyned with the first local oscillator signal from the PLL frequency synthesizer circuit at the first mixer (IC300) to become a 58.05MHz first intermediate frequency (IF) signal.

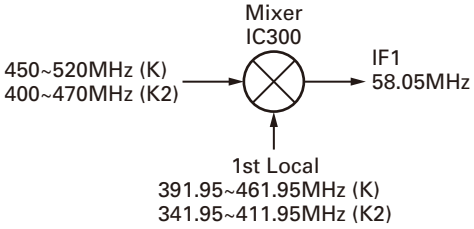

Fig. 7 1st-Mixer circuit

2-7. IF circuit

The first IF signal is amplified by the IF Post Amp (Q301) and passed through a four-pole monolithic crystal filter (XF300) to reject adjacent channel signal. The filtered first IF signal is amplified by the IF AGC amplifier (Q300) and then applied to the IF system IC (IC403). The IF system IC

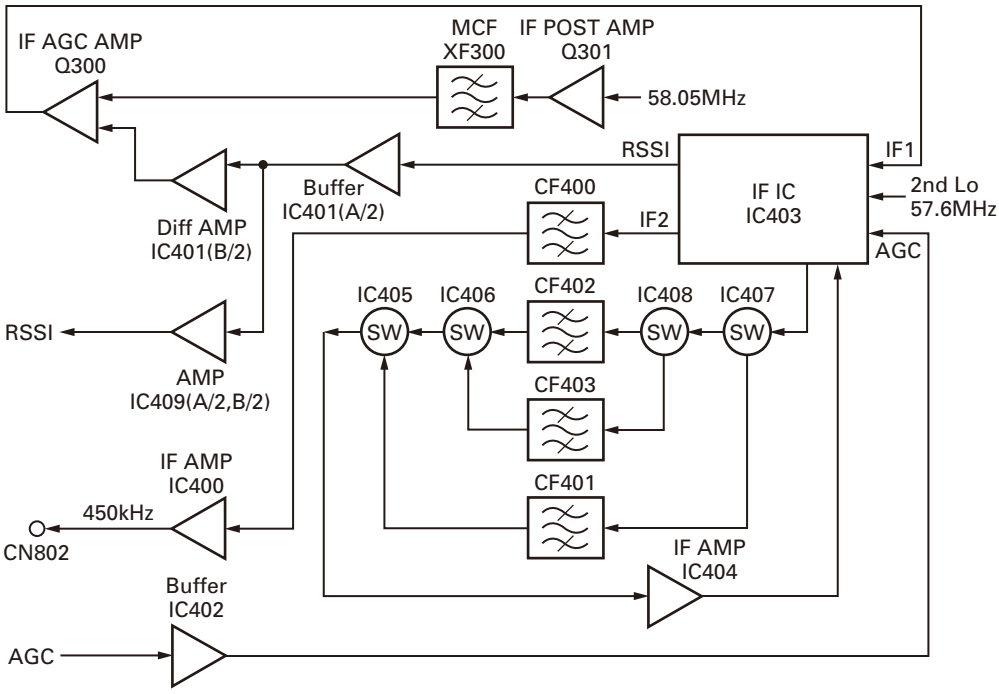

Fig. 8 IF circuit

CIRCUIT DESCRIPTION

provides a second mixer, AGC amplifier, and RSSI (Received Signal Strength Indicator).

The second mixer mixes the first IF signal with the 57.6 MHz of the second local oscillator output and produces the second IF signal of 450kHz.

The second IF signal is passed through the ceramic filter (CF401, CF402 and CF403) to reject the adjacent channel signals. The filtered second IF signal is amplified by the second IF amplifier (IC404) and AGC amplifier (IC403).

The signal from the AGC amplifier is input to the AD converter (X53-449: IC20) through the ceramic filter (CF400) and operational amplifier (IC400 and X53-449: IC20).

2-8. Receiver PLL circuit (SUB unit)

■ VCO

RX VCO circuit consists of two VCOs (VCO A X58-509: Q352, VCO B X58-509: Q353). Those VCOs generate a 1st local signal. For the VCO oscillation frequency, the 1st local signal is 391.95 to 461.95MHz (K), 341.95 to 411.95MHz (K2). (VCO A: 391.95~426.95MHz (K), 341.95~376.95MHz (K2), VCO B: 426.95~461.95MHz (K), 376.95~411.95MHz (K2))

Those VCO oscillation frequency is determined by two systems of voltage control terminals "CV" and "RXASSIST".

The voltage control terminals, "CV" and "RXASSIST", are controlled by the PLL IC (X58-509: IC300) and the MCU (X53-449: IC20) and the output frequency changes continuously according to the applied voltage.

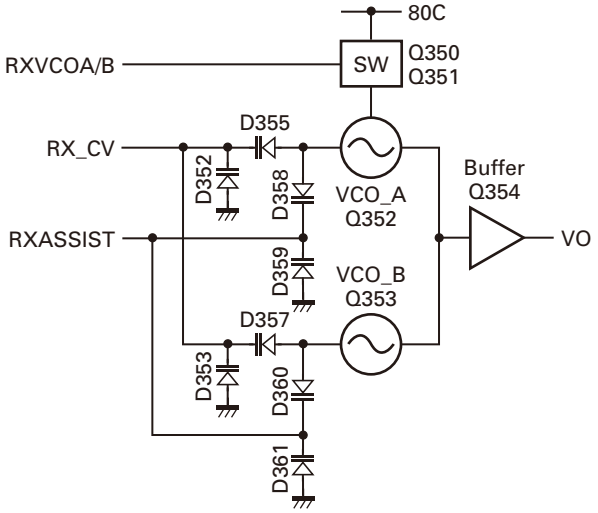

Fig. 9 Receiver VCO circuit

■ PLL IC (X58-509: IC300)

PLL IC compares the differences in phases of the VCO oscillation frequency and the VCTCXO reference frequency, returns the difference to the VCO CV terminal and realizes the "Phase Locked Loop" for the return control. This allows the VCO oscillation frequency to accurately match (lock) the desired frequency.

When the frequency is controlled by the PLL, the frequency convergence time increases as the frequency difference increases when the set frequency is changed. To supplement this, the MCU is used before control by the PLL IC to bring the VCO oscillation frequency close to the desired frequency. As a result, the VCO CV voltage does not change and is always stable at approx. 3.0V.

The desired frequency is set for the PLL IC by the MCU (X53-449: IC20) through the 3-line "SPSD0", "SPSCLK0", "/RXPCS_TR" serial bus. Whether the PLL IC is locked or not is monitored by the MCU through the "LDR" signal line. If the VCO is not the desired frequency (unlock), the "LDR" logic is low.

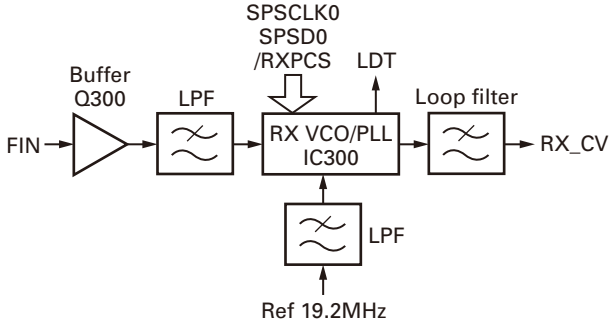

Fig. 10 Receiver PLL circuit

2-9. AVR circuit

The 13.6V Power Source (+B) is provided through the Connector (CN701) from the Final unit (X45-393). +B is connected to the FET switch (Q702, Q703) and CN700. Q702 and Q703 are controlled by the "SBC" signal from the MCU which is in the Control unit (X53-449). If "SBC" logic is high, Q702 and Q703 turn on. The 13.6V power source (SB) which is turned on by Q702 and Q703 is provided to the 8V AVR IC (IC702) and CN700. CN700 is connected to the Control unit (X53-449) to provide the +B power source and the SB power source.

IC702 supplies 8V to the VCO, 15V DC/DC converter IC (IC701), AVR IC (IC700) and FET switches (Q700, Q701). IC701 is a step-up switching regulator. IC701 regulates 8V to 15V and supplies the 15V power source to the "assist circuit" and "front-end BPF tuning circuit". The FET switches (Q700, Q701) are controlled by the I/O expander IC (IC805). When Q700 and Q701 turn on, the 8V power source is provided to the receiver section.

IC700 regulates 5V to 8V. The output of IC700 is provided to the FET switches (Q705, Q706) and AVR IC (IC703). The FET switches (Q705, Q706) are controlled by the I/O expander IC (IC805). When Q705 and Q706 turn on, the 5V power source is provided to the receiver section, IF section and IC704. IC704 regulates 5V to 3V. The 3V power source is provided to the Mixer IC (IC300). IC703 regulates 5V to 3.3V. The output of IC703 is provided to the IF section.

CIRCUIT DESCRIPTION

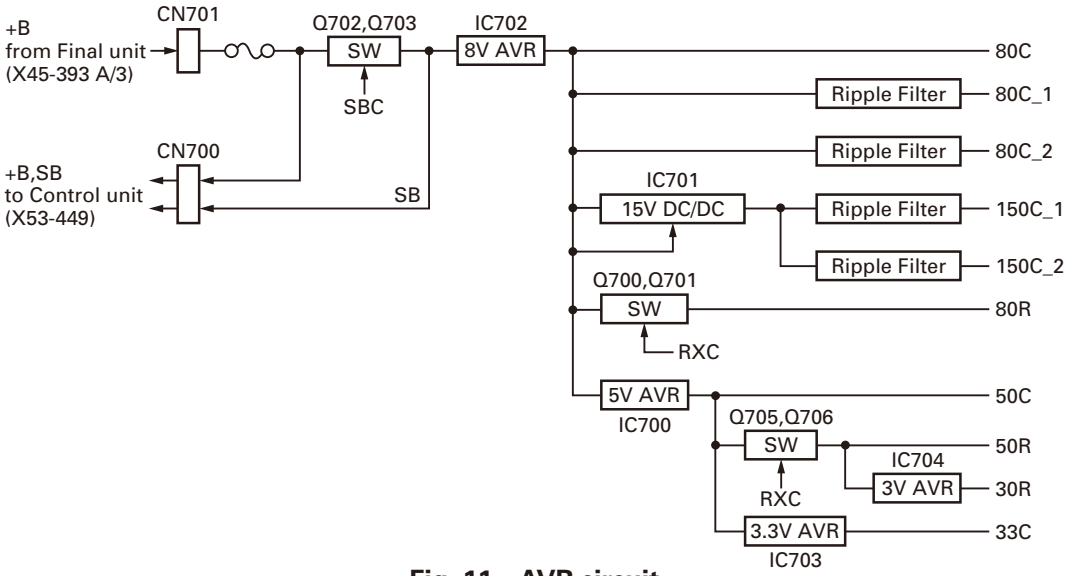

Fig. 11 AVR circuit

2-10. Other circuit

■ EEPROM

The EEPROM (IC802) has a data capacity of 2Kbit. It stores the tuning data in frequency adjustment.

■ Temperature sensor

The temperature sensor (IC800) monitors temperature around the VCTCXO (X500).

■ I/O expander

The I/O expander IC (IC805) controls the power sources, fan, analogue switches, and the transmit power control circuit. IC805 is controlled by the MCU which is in the Control unit (X53-449).

■ Electronic volume control IC

The Electronic volume control IC (IC804) adjusts the modulating signal, center frequency of the front-end BPF, and the power of the RF final amplifier. IC804 is controlled by the MCU which is in the Control unit.

3. Final unit

The RF final amplifier unit (X45-393) amplifies the transmitter power to a specified level.

This unit consists of the following circuits:

(1) Driver and Final power amplifier circuit
(2) CM coupler circuit
(3) Filter circuit
(4) APC circuit
(5) High temperature detector circuit
(6) FAN action control circuit
(7) AVR circuit

3-1. Driver and Final power amplifier circuit

The transmit signal from the TX IN terminal CN1 of the Final unit (X45-393) is amplified by Q1, Q2 and Q3, and is passed to the final stage Q4. The signal amplified by the final stage Q4 passes through the CM coupler circuit and filter circuit, and is then fed to the antenna.

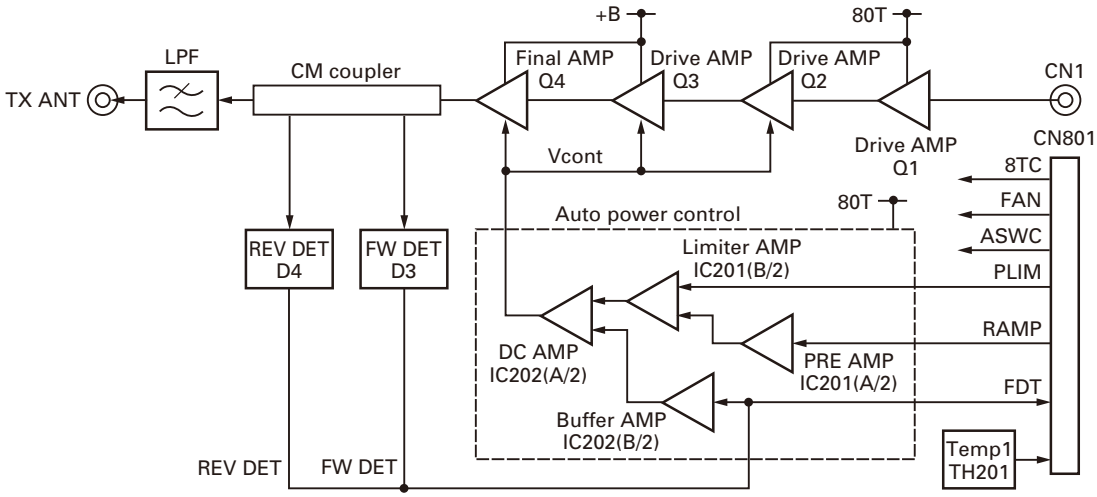

Fig. 12 Driver and Final power amplifier circuit

CIRCUIT DESCRIPTION

3-2. CM coupler circuit

The CM coupler circuit is a line for detecting forward wave and reflected wave. Forward wave is detected by D1, and is converted into DC voltage. If an abnormal antenna load is connected, reflected wave is detected by D3 and converted into DC voltage.

3-3. Filter circuit

This circuit removes harmonics from the transmitter output and sends filtered signals to the antenna.

3-4. APC circuit

The automatic transmission power control (APC) circuit stabilizers the transmitter output power at a pre-determined level. DC voltage from the CM coupler circuit is amplified by the DC amplifier IC202 (1/2). IC202 (2/2) compares the APC control voltage (RAMP) generated by the MCU (X53-449) and the DC amplifier IC201 (1/2, 2/2) with the output voltage from IC202 (1/2) to control the gate voltage for amplifier Q2, Q3 and final amplifier Q4.

3-5. High temperature detector circuit

To prevent thermal destruction of amplifier Q3 and final amplifier Q4, this circuit reduces the APC control voltage (RAMP) when the temperature of the amplifier Q3 and final amplifier Q4 rises. The MCU detects the temperature with the thermistor (TH201) and controls the APC voltage (RAMP).

3-6. FAN action control circuit

The FAN action control circuit consists of the FAN and switching transistor Q207. It is controlled by the MCU (X53-449). If the FAN action is set to "Temperature", the cooling fan is turned ON or OFF according to the temperature. If the FAN action is set to "Continuous", the cooling fan operates continuously, but Q207 stays ON.

3-7. AVR circuit

The 13.6V power source (+B) is provided through connector CN201 to the Final unit (X45-393 A/3). +B is connected to CN203 to supply the 13.6V power source for the TX-RX unit (X57-795). +B is a power source for the "final amplifier", "drive amplifier" and fan. IC203 regulates the +B voltage to 8V. This 8V power source is connected to the FET switches Q203, Q204, Q205, and Q206. Q204 and Q206 are controlled by the "8TC" signal from the I/O expander IC which is in the TX-RX unit (X57-795). If "8TC" logic is high, Q204 and Q206 turn on and supply the 8V power source to the APC circuit and pre drive amplifiers. Q203 and Q205 are controlled by the "ASWC" signal from the I/O expander IC which is in the TX-RX unit (X57-795). If "ASWC" logic is high, Q203 and Q205 turn on and supply the 8V power source to the antenna switch circuit.

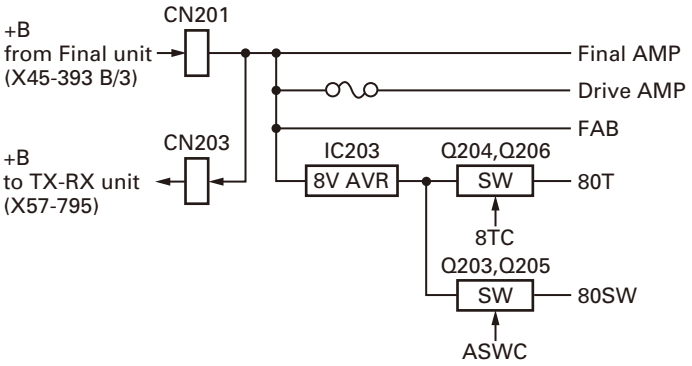

Fig. 13 AVR circuit

4. Control unit

The Control unit (X53-449) consists of the following circuits:

(1) MCU circuit
(2) Memory circuit
(3) DSP circuit
(4) Squelch circuit
(5) Power supply circuit
(6) Power Supply Voltage Monitoring Circuit
(7) 18.432MHz clock circuit
(8) Audio circuit
(9) Other circuit

4-1. MCU circuit

The MCU (IC20) is a 32bit RISC processor, equipped with a peripheral function and ADC/DAC.

This MCU operates at a 18.432MHz clock and 3.3V/1.5V DC.

It controls the flash memory, SRAM, DSP, receive circuit, transmitter circuit, and control circuit.

CIRCUIT DESCRIPTION

4-2. Memory circuit

The Memory circuit consists of the MCU (IC20), the SRAM (IC9), and the flash memory (IC3).

The flash memory has a capacity of 32Mbit that contains the transceiver control program for the MCU and stores the data. It also stores the data for transceiver channels and operating parameters that are written by the FPU. This program can be easily written from external devices.

The SRAM has a capacity of 1Mbit that contains work area and data area.

■ Flash memory

Note: The flash memory stores the data that is written by the FPU, tuning data (Deviation, Squelch, etc.), and firmware program.

■ SRAM (static memory)

Note: The SRAM has a temporary data area and work area. When the power supply is off, it is backed up by an internal secondary lithium battery. Therefore, the saved data is not lost.

4-3. DSP circuit

The DSP circuit consists of a DSP (IC6) and processes the base band signal. The DSP operates on an external clock of 18.432MHz (the same as IC20). The I/O section operates at 3.3V and the core section operates at 1.6V. The DSP carries out the following processes:

■ Digital processing

- 4Level FSK and Baseband filter processing
- Vocoder processing between audio codec and modulation/demodulation
- CAI processing, such as error correction encoding/decoding and interleaving
- AFC loop control
- Frame synchronization and Time tracking
- Data scrambling

■ Analog FM processing

- Pre-emphasis/De-emphasis
- QT/DQT encoding/decoding
- DTMF encoding/decoding
- Compressor/Expander processing
- Voice scrambler processing

■ Audio or Modulation function

- Transmit/Receive audio filtering processing
- Microphone amplifier AGC processing
- Audio soft mute processing
- Modulation level processing
- Squelch Filtering

■ Other function

- Voting tone
- CWID
- Courtesy tone
- Repeater operating
- Analog/Digital Mixed mode

4-4. Squelch circuit

The Squelch circuit amplifies the demodulated noise signal from IC6 after filtering through the BPF circuit. The processed digital noise signal is applied to CODEC IC14, and is converted from digital to analog. The amplified signal is then converted to a DC signal by the detection circuit. The converted signal is fed back to IC20.

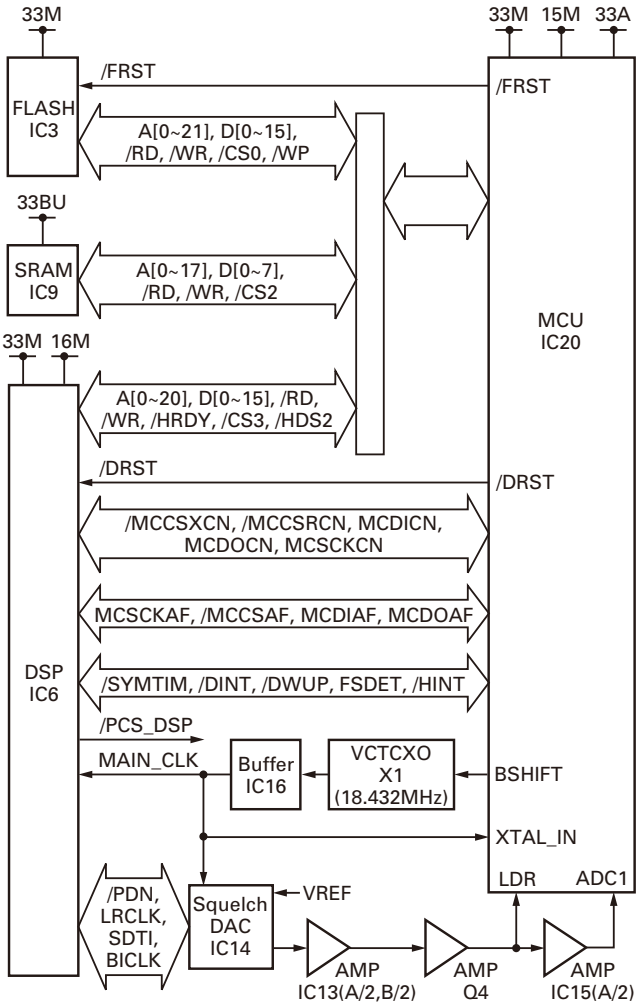

Fig. 14 Control circuit

4-5. Power supply circuit

The X53-449 circuit consists of IC301, IC302, IC303, IC304, IC305 and IC306.

IC301 is a DC/DC converter that converts 13.6V to 6.0V. This 13.6V voltage is supplied from TX-RX unit (X57-795).

IC302 is connected to IC301 and regulates the voltage to 5.0V. IC303, IC304, IC305 and IC306 are connected to IC301. IC303 and IC306 are 3.3V voltage regulators. IC304 is a 1.5V regulator IC, and IC305 is a 1.6V regulator IC.

CN302 is the connector for the lithium battery. The lithium battery is used to back up the SRAM and RTC data when no external DC power source is available.

CIRCUIT DESCRIPTION

4-6. Power supply voltage monitoring circuit

The X53-449 circuit consists of IC307, IC308, D303 and Q301.

IC308 is a voltage detect IC and is used to generate the "/RST" signal for the MCU (IC20).

This "/RST" signal is connected to the hardware reset pin of MCU (IC20).

IC307 is a voltage detect IC and is used to generate the "/BINT" signal for the MCU (IC20).

This "/BINT" signal is connected to the hardware interrupt pin of MCU (IC20). The software of the MCU (IC20) runs to the sleep-mode to use the "/BINT" signal.

D303 and Q301 are used to generate the "OVRB" signal for the MCU (IC20). The software of the MCU (IC20) runs to the sleep-mode to use the "OVRB" signal.

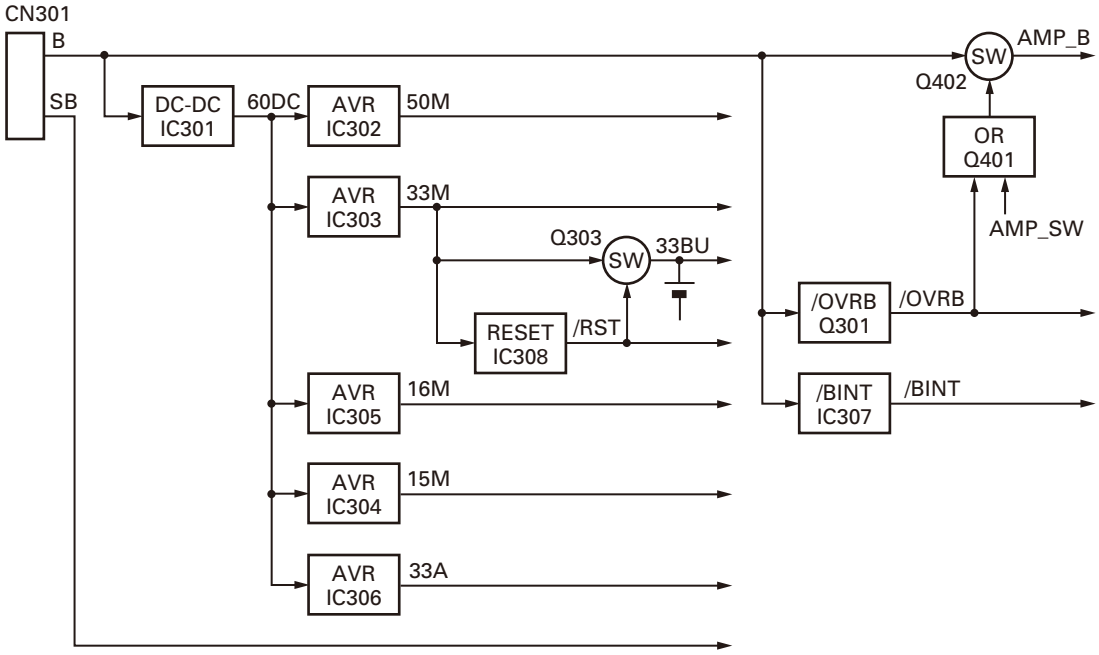

Fig. 15 Power supply circuit

4-7. 18.432MHz clock circuit

The 18.432MHz clock is provided to the MCU (IC20), DSP(IC6), and DAC (IC14) of the Squelch circuit.

4-8. Audio circuit

■ Audio amplifier circuit

The audio amplifier circuit is located in the control section of the Control unit (X53-449). The 4W output audio power is available from the pin15 TEST/SPKR connector "SPO", "SPG" on the rear panel to the external speaker in the case of a power supply voltage of 13.6V and a 4Ω load.

■ Microphone circuit

The signal from the microphone is passed through the AGC circuit located in the Display unit (X54-373 A/2) so that it may not saturate. This circuit consists of IC501, D501, D502 Q501, and Q502. The AGC controls the amplifier gains using the detected audio signal depending on the positive and negative peaks of the signal amplitude. The audio signal goes to the control section of the Control unit (X53-449) from the Display unit (X54-373 A/2).

■ Modulation circuit (Analog/Digital signal processing)

In the case of the Analog Signal Processing mode, the transmitting audio signal is amplified by IC405 (C/4), input to the MICADCO terminal of the MCU (IC20), and audio processed by DSP (IC6). The processed audio signal from the MODDAC terminal of IC20 is passed through an anti-aliasing filter at IC404 (A/2), and is then amplified to a sufficient level by IC404 (B/2), and amplified by the summing (TD) amplifier. The Digital Signal Processing mode is the same as the Analog Signal Processing mode.

4-9. Other circuit

■ Real-time clock

The clock function is based on a real-time clock IC (IC17). When the power supply is off, it is backed up by an internal secondary lithium battery.

CIRCUIT DESCRIPTION

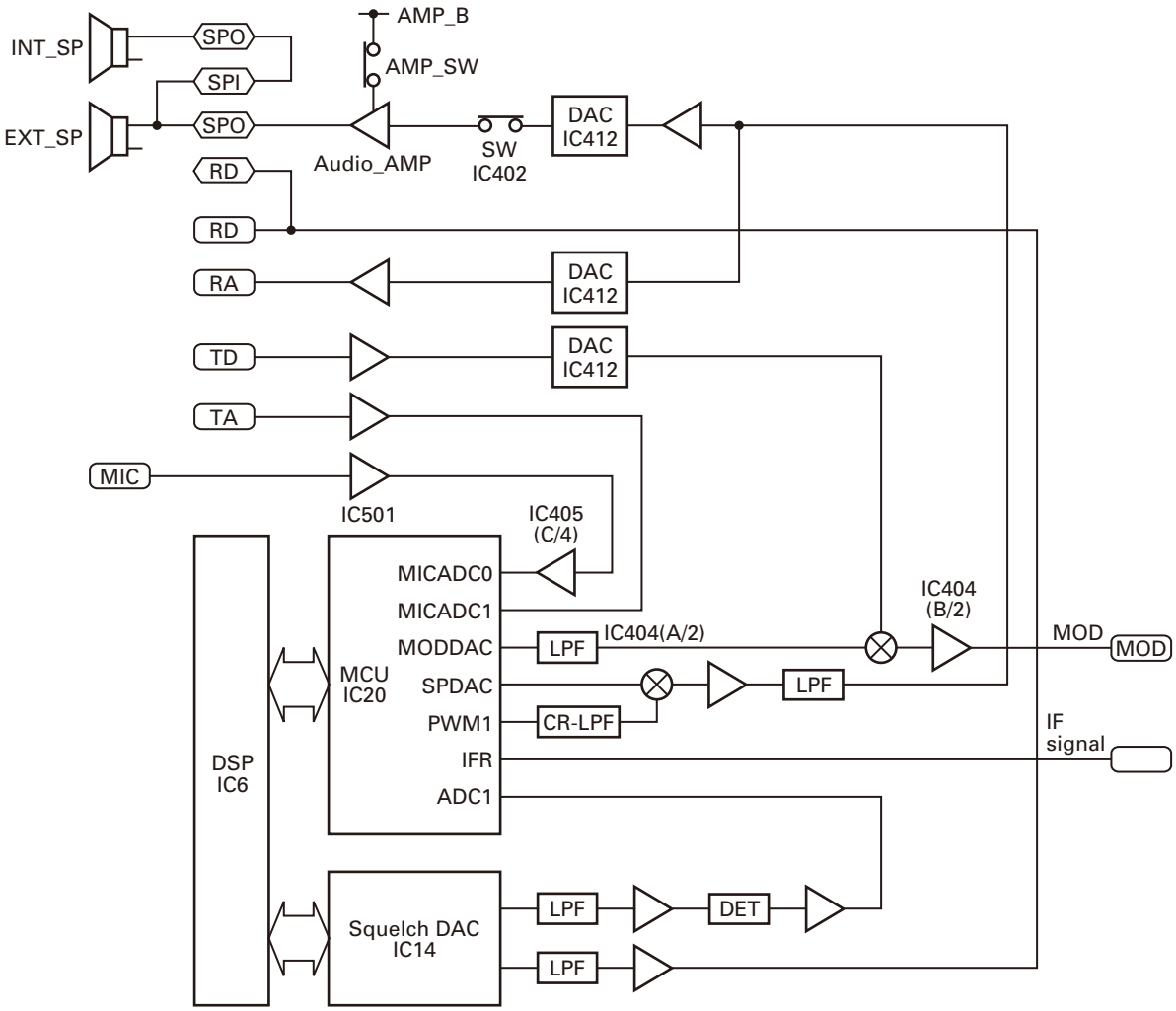

Fig. 16 Modulation circuit (Analog/Digital signal processing)

5. Display unit

The Display unit (X54-3730-20) is different from X54-3580-20 which is used in the TKR-750/850/751/851.

The Display unit (X54-3730-20) consists of the following circuits:

(1) LED circuit
(2) Key switch circuit
(3) Power supply voltage detector

5-1. LED circuit

The display circuit consists of various types of LEDs: 7-segment type D506 and D507 (red), D503 (red: transmission), D504 (green: busy), D505 (green: power on).

IC502 to IC505 are shift registers that convert MCU serial data to parallel data and turn on the LEDs.

5-2. Key switch circuit

There are PF key 1 to PF key 6 on the Display unit. Using these key switches, mode settings are available.

The logic signals pushing these key switches are entered directly into the MCU (IC20).

5-3. Power supply voltage detector

The Display unit has a power supply voltage detector circuit.

The power supply voltage (SB) is divided through two resistors (R545 and R546).

The divided voltage is input to the MCU via the IC508.

COMPONENTS DESCRIPTION

FINAL UNIT (X45-3930-XX)

Ref. No.	Part Name	Description
IC201,202	IC	DC amplifier
IC203	IC	Voltage regulator
Q1	Transistor	RF amplifier
Q2	FET	RF amplifier
Q3	FET	TX drive amplifier
Q4	FET	Final amplifier
Q203~206	FET	DC switch
Q207	Transistor	DC switch
D1~3	Diode	RF detector
D4~7	Diode	RF switch
D8	Surge absorber	Surge protection
D9	Diode	RF switch
D201	Zener diode	Voltage reference
D202	Surge absorber	Surge protector
D203	Diode	Surge protector
D301	Diode	Protect of reverse connection

CONTROL UNIT (X53-4490-10)

Ref. No.	Part Name	Description
IC3	IC	Flash memory
IC4,5	IC	RS-485 transceiver
IC6	IC	DSP
IC7,8	IC	Buffer
IC9	IC	SRAM
IC10,11	IC	Buffer
IC12	IC	AND gate
IC13	IC	AF amplifier
IC14	IC	CODEC
IC15	IC	AF amplifier
IC16	IC	Buffer amplifier
IC17	IC	RTC IC
IC18,19	IC	Buffer
IC20	IC	MCU
IC21	IC	RS-232C driver/receiver
IC22	IC	I/O expander
IC23	IC	NAND gate
IC24	IC	AND gate
IC25	IC	OR gate
IC26	IC	AND gate
IC27,28	IC	AF amplifier
IC301	IC	DC/DC converter
IC302~308	IC	Voltage regulator
IC401	IC	NAND gate
IC402	IC	Analog switch
IC403	IC	AF power amplifier
IC404~406	IC	OP AMP
IC407	IC	Analog switch
IC411	IC	OP AMP
IC412	IC	DC/AC converter
Q4	Transistor	DC switch
Q5	FET	DC switch
Q6~10	Transistor	Buffer amplifier
Q301	Transistor	DC switch
Q302	FET	DC switch
Q303	Transistor	Power switch
Q401	Transistor	Power switch
Q402	FET	Power switch
Q403	Transistor	Power switch
Q404,405	Transistor	AF mute switch
D1,2	Diode	Detector
D3~12	Diode	Surge protector
D13	Zener diode	Surge protector
D14~16	Diode	Surge protector
D18	Diode	Surge protector
D20	Diode	Surge protector
D22,23	Diode	Surge protector
D24	Zener diode	Surge protector
D26	Diode	Surge protector
D28,29	Diode	Surge protector
D30	Zener diode	Surge protector
D31	Diode	Surge protector
D32	Zener diode	Surge protector
D35	Diode	Surge protector
D36	Zener diode	Surge protector
D37	Varistor	Current protector
D301,302	Diode	Surge protector
D303	Zener diode	Voltage reference
D304,305	Diode	Surge protector
D401	Diode	Diode switch

DISPLAY UNIT (X54-3730-20)

Ref. No.	Part Name	Description
IC501	IC	MIC amplifier
IC502~505	IC	Shift register
IC506,507	IC	Voltage regulator
IC508	IC	Analog switch
Q501,502	Transistor	Level controller
Q503,504	FET	DC switch
Q506	Transistor	DC switch
Q507	FET	DC switch
Q508~511	Transistor	DC switch

COMPONENTS DESCRIPTION

Ref. No.	Part Name	Description
Q512~514	FET	DC switch
Q516~519	FET	DC switch
Q521~525	FET	DC switch
D501,502	Diode	AF detector
D503~505	LED	LED
D506,507	LED	7 segment
D508~514	Diode	Surge absorption
D601,602	Diode	Surge absorption
D603	Varistor	Current protector

TX-RX UNIT (X57-7950-XX)

Ref. No.	Part Name	Description
IC100,101	IC	OP AMP
IC200,201	IC	OP AMP
IC203	IC	Buffer
IC300	IC	Mixer
IC400	IC	IF amplifier
IC401	IC	Buffer amplifier
IC402	IC	OP AMP
IC403	IC	IF system
IC404	IC	IF amplifier
IC405~408	IC	Analog switch
IC409	IC	Buffer amplifier
IC500	IC	Buffer amplifier
IC501	IC	OP AMP
IC600,601	IC	Buffer
IC602	IC	16.8MHz PLL
IC603~607	IC	OP AMP
IC608	IC	AF amplifier
IC700~704	IC	Voltage regulator
IC800	IC	Temperature sensor
IC801	IC	OP AMP
IC802	IC	EEPROM
IC803	IC	Buffer amplifier
IC804	IC	Digital potentiometer
IC805	IC	I/O expander
IC806	IC	Analog switch
Q100	Transistor	DC switch
Q101	Transistor	RF amplifier
Q200,201	Transistor	DC switch
Q202,203	Transistor	RF amplifier
Q300	FET	RF amplifier
Q301	Transistor	RF amplifier
Q500	FET	DC switch
Q501	Transistor	RF amplifier

Ref. No.	Part Name	Description
Q502,503	FET	RF amplifier
Q504	Transistor	RF amplifier
Q505~507	FET	DC switch
Q600	FET	DC switch
Q601	Transistor	DC switch
Q602,603	Transistor	RF amplifier
Q604,605	Transistor	DC switch
Q606	Transistor	RF amplifier
Q607	FET	DC switch
Q700~702	FET	DC switch
Q703	Transistor	DC switch
Q704~706	FET	DC switch
Q800	FET	DC switch
D100,101	Varicap	Frequency control
D103~108	Varicap	Frequency control
D200	Diode	DC switch
D500,501	Zener diode	Limiter
D503	Diode	Detector
D504,505	Diode	RF switch
D600	Diode	DC switch
D601	Diode	RF switch
D801	Diode	DC switch

RX VCO/PLL UNIT (X58-5090-XX)

Ref. No.	Part Name	Description
IC300	IC	PLL
Q300	Transistor	Buffer amplifier
Q350,351	FET	DC switch
Q352,353	FET	VCO OSC
Q354	Transistor	Buffer amplifier
D352,353	Varicap	Frequency control
D355	Varicap	Frequency control
D357~361	Varicap	Frequency control

TX VCO/PLL UNIT (X58-5100-XX)

Ref. No.	Part Name	Description
IC300	IC	PLL
Q300	Transistor	Buffer amplifier
Q350,351	FET	DC switch
Q352,353	FET	VCO OSC
Q354	Transistor	Buffer amplifier
D352,353	Varicap	Frequency control
D355	Varicap	Frequency control
D357~361	Varicap	Frequency control

PARTS LIST

✻ New Parts. ⚠indicates safety critical components.
Parts without **Parts No.** are not supplied.
Les articles non mentionnes dans le **Parts No.** ne sont pas fournis.
Teile ohne **Parts No.** werden nicht geliefert.

L : Scandinavia **K** : USA **P** : Canada
Y : PX (Far East, Hawaii) **T** : England **E** : Europe
C : China **X** : Australia **M** : Other Areas

Ref. No.	Address	New parts	Parts No.	Description	Destination
NXR-810					
1	3A		A62-0933-23	PANEL ASSY (INNER)	
2	1A		A62-1146-04	PANEL (TX-RX)	
3	1B		A62-1147-04	PANEL (FINAL)	
4	1D		A62-1148-03	PANEL (OUTER)	
5	3C		A62-1174-03	PANEL ASSY	
6	2C		A82-0077-02	REAR PANEL	
8	1F		B10-2635-04	FRONT GLASS ACCESSORY	
9	1F		B11-1259-04	FILTER ACCESSORY	
10	1F		B62-2199-00	INSTRUCTION MANUAL	
11	2C,3D	✻	B72-2601-04	MODEL NAME-PLATE	K
11	2C,3D		B72-2602-04	MODEL NAME-PLATE	K2
13	1B		E30-3414-05	DC CORD (EXT DC IN)	
14	1C		E30-3418-15	ANTENNA CABLE (RX IN)	
15	1E		E30-3427-35	DC CORD ACCESSORY	
16	1D		E30-7528-15	ANTENNA CABLE (TX OUT)	
17	1A		E30-7689-05	TRUNK CABLE (X57-X53)	
18	1C		E30-7690-05	ANTENNA CABLE (REF IN)	
19	1E		E31-3228-05	15P PLUG ACCESSORY	
20	1B		E37-0902-15	LEAD WIRE WITH TERMINAL (DC+)	
21	1B		E37-0903-15	LEAD WIRE WITH TERMINAL (DC-)	
22	3A		E37-0905-15	LEAD WIRE WITH CONNECTOR (SP)	
23	3A		E37-0906-05	LEAD WIRE WITH CONNECTOR (X53-X54)	
24	3A,2B		E37-0908-05	LEAD WIRE WITH CONNECTOR (11P)	
25	3A,1B		E37-0911-05	LEAD WIRE WITH CONNECTOR (3P)	
26	2B		E37-0912-15	LEAD WIRE WITH MINIPIN PLUG	
27	2C		E37-0913-05	LEAD WIRE WITH CONNECTOR (ACC15P)	
28	2A		E37-1340-25	FLAT CABLE	
29	2C		E37-1376-05	LEAD WIRE WITH CONNECTOR (DSUB25P)	
32	1C,1E		F05-1537-05	BLADE FUSE (15A/32V) ACCESSORY	
33	2C		F09-0445-05	CAP (DSUB)	
34	1C		F09-0471-15	FANMOTOR	
36	1B		F10-3129-03	SHIELDING CASE (X45 FINAL PCB)	
37	2A,2B		G02-0576-14	FLAT SPRING	
38	2B		G02-0829-14	FLAT SPRING (RX VCO)	
39	2B		G02-0829-14	FLAT SPRING (TX VCO)	K
40	3A		G02-0885-13	EARTH SPRING (X54 DISPLAY PCB)	
41	1B		G02-0894-04	EARTH SPRING (X45:FINAL FET)	
42	2B		G02-1831-04	EARTH SPRING (REAR BOTTOM)	
43	1C		G02-1832-04	EARTH SPRING (REAR TOP)	
44	1B		G02-1855-04	FLAT SPRING (X45:AVR)	
46	2B,3B		G10-1263-04	FIBROUS SHEET (CHASSIS)	
47	3C,2D		G10-1264-04	FIBROUS SHEET (PANEL ASSY)	
48	3B		G10-1344-04	FIBROUS SHEET (EARTH SPRING,SHORT)	
49	3B		G10-1345-04	FIBROUS SHEET (EARTH SPRING,LONG)	
50	3A		G10-1377-04	FIBROUS SHEET (VOLUME)	
51	3A	✻	G10-1821-04	FIBROUS SHEET (KNOB)	
52	1F		G13-1801-04	CUSHION (40X40X5) ACCESSORY	
53	1F		G13-1802-04	CUSHION (40X40X10) ACCESSORY	
54	2B		G13-1886-04	CUSHION (BNC)	
56	2F		H12-4298-01	PACKING FIXTURE (FRONT)	
57	2E		H12-4299-01	PACKING FIXTURE (REAR)	
58	2F		H12-4300-03	PACKING FIXTURE (BOX)	

NXR-810
FINAL UNIT (X45-3930-XX)

Ref. No.	Address	New parts	Parts No.	Description	Destination
59	1F		H13-1170-03	CARTON BOARD	
60	1E		H25-0029-04	PROTECTION BAG (60/110/0.07)	
61	1F		H25-0747-04	PROTECTION BAG (250X350)	
62	1E		H25-0762-04	PROTECTION BAG (120X300)	
63	1F		H25-2328-04	PROTECTION BAG (80/250/0.07)	
64	2E		H25-2334-14	PROTECTION BAG	
65	1F	✻	H52-2389-02	ITEM CARTON CASE	
67	1E		J02-0475-05	FOOT ACCESSORY	
68	1E		J02-0492-04	FOOT (RUBBER) ACCESSORY	
69	2B		J19-5540-03	HOLDER (TRUNK CABLE)	
70	1B		J21-8467-04	MOUNTING HARDWARE (X45:DRIVE FET)	
71	1F		J21-8559-04	MOUNTING HARDWARE ACCESSORY	
72	1E		J59-0302-05	GROMMET ACCESSORY	
73	1B,1E		J61-0307-05	BAND	
75	1E		K01-0418-15	HANDLE ACCESSORY	
76	3A		K29-5389-03	KNOB (VOLUME)	
77	3A		K29-9370-02	KEY TOP	
78	3A		K29-9106-04	KNOB (POWER)	
80	1E		L79-1419-05	LINE FILTER (ACCESSORY DC CORD)	
81	1B		L79-1854-05	LINE FILTER (DC CORD:EXT DC IN)	
82	1B		L79-1855-05	LINE FILTER (DC+,DC-)	
A	2C		N09-2292-05	HEXAGON HEAD SCREW (DSUB)	
B	1C,2C,2D		N30-2606-48	PAN HEAD MACHINE SCREW (ANT)	
C	2A,1E		N30-4006-48	PAN HEAD MACHINE SCREW (CHAS,ACC)	
D	2B,2C		N30-4014-48	PAN HEAD MACHINE SCREW (CHASSIS)	
E	1C		N30-4020-43	PAN HEAD MACHINE SCREW (FAN)	
F	1C,2C		N32-3006-48	FLAT HEAD MACHINE SCREW (R PANEL)	
G	3B		N32-4008-43	FLAT HEAD MACHINE SCREW (F PANEL)	
H	1A,1B,1E		N35-3006-43	BINDING HEAD MACHINE SCREW (TOP,ACC)	
J	1C		N35-4006-43	BINDING HEAD MACHINE SCREW (TOP)	
K	1B,3B		N67-3008-48	PAN HEAD SEMS SCREW (X53:AUDIO IC)	
L	1C,2C		N80-2608-43	PAN HEAD TAPTITE SCREW (FUSE)	
M	3A		N87-3005-43	BRAZIER HEAD TAPTITE SCREW (SP)	
N	3A,1B,2B		N87-3006-48	BRAZIER HEAD TAPTITE SCREW (PCB)	
84	3A		T07-0770-45	SPEAKER	
86	3A		W09-0971-05	LITHIUM CELL	
-			X53-4490-11	SERVICE CONTROL UNIT	
-			490-0174-05	ADHESIVE TAPE	
FINAL UNIT (X45-3930-XX) -10: K2 -11: K					
C1			CK73GB1H471K	CHIP C 470PF K	
C2			CC73GCH1H060D	CHIP C 6.0PF D	
C3			CK73GB1H471K	CHIP C 470PF K	
C4			CK73GB1H104K	CHIP C 0.10UF K	
C5,6			CK73GB1H471K	CHIP C 470PF K	
C8			CC73GCH1H470J	CHIP C 47PF J	K
C8			CK73GB1H471K	CHIP C 470PF K	K2
C9			CC73GCH1H080D	CHIP C 8.0PF D	
C10			CC73GCH1H050B	CHIP C 5.0PF B	K
C10			CC73GCH1H120J	CHIP C 12PF J	K2
C11			CC73GCH1H040B	CHIP C 4.0PF B	K

PARTS LIST

FINAL UNIT (X45-3930-XX)

Ref. No.	Address	New parts	Parts No.	Description			Desti-nation
C12			CK73GB1H471K	CHIP C	470PF	K	
C13,14			CK73GB1H104K	CHIP C	0.10UF	K	
C16-18			CK73GB1H471K	CHIP C	470PF	K	
C20			CK73FB1H471K	CHIP C	470PF	K	
C22			CC73FCH1H080D	CHIP C	8.0PF	D	K
C22			CC73FCH1H120J	CHIP C	12PF	J	K2
C23			CK73FB1H471K	CHIP C	470PF	K	
C24-26			CC73GCH1H470J	CHIP C	47PF	J	K
C27			CK73FB1H471K	CHIP C	470PF	K	K
C27,28			CC73FCH1H060B	CHIP C	6.0PF	B	K2
C28			CC73FCH1H090B	CHIP C	9.0PF	B	K
C29			C93-0566-05	CHIP C	33PF	J	
C31			C93-0599-05	CHIP C	470PF	K	
C32			CK73GB1H471K	CHIP C	470PF	K	
C33			C93-0599-05	CHIP C	470PF	K	
C34			CC73GCH1H101J	CHIP C	100PF	J	
C35			CC73FCH1H470J	CHIP C	47PF	J	K
C36			C93-1784-05	CHIP C	18PF	J	K
C36			C93-1792-05	CHIP C	39PF	J	K2
C37			CK73GB1H104K	CHIP C	0.10UF	K	
C40			CK73GB1H471K	CHIP C	470PF	K	
C41			CC73GCH1H220J	CHIP C	22PF	J	
C42			C93-1784-05	CHIP C	18PF	J	K
C42			C93-1792-05	CHIP C	39PF	J	K2
C43			C93-0599-05	CHIP C	470PF	K	
C44			CC73GCH1H820J	CHIP C	82PF	J	
C45			C93-1784-05	CHIP C	18PF	J	K
C45			C93-1792-05	CHIP C	39PF	J	K2
C48		✻	C93-1786-05	CHIP C	22PF	J	K
C48			C93-1789-05	CHIP C	30PF	J	K2
C49			CC73GCH1H101J	CHIP C	100PF	J	
C50			C93-0599-05	CHIP C	470PF	K	
C51			C93-1786-05	CHIP C	22PF	J	K
C51			C93-1788-05	CHIP C	27PF	J	K2
C52			CK73GB1H104K	CHIP C	0.10UF	K	
C53			CC73FCH1H050C	CHIP C	5.0PF	C	K
C54			C93-1782-05	CHIP C	15PF	J	
C56		✻	C93-1771-05	CHIP C	7PF	C	K
C56			C93-1778-05	CHIP C	10PF	J	K2
C57			CC73GCH1H220J	CHIP C	22PF	J	
C58			C93-1768-05	CHIP C	6PF	C	
C60			CC73GCH1H820J	CHIP C	82PF	J	
C61			C93-0572-05	CHIP C	100PF	J	K2
C61			C93-0599-05	CHIP C	470PF	K	K
C62			CK73GB1H471K	CHIP C	470PF	K	
C67			C93-0599-05	CHIP C	470PF	K	
C68			CK73GB1H471K	CHIP C	470PF	K	
C74			CK73GB1H471K	CHIP C	470PF	K	
C76			C93-0572-05	CHIP C	100PF	J	
C77			CC73FCH1H030B	CHIP C	3.0PF	B	
C79,80			C93-0551-05	CHIP C	1.5PF	C	
C82			C93-0554-05	CHIP C	4.0PF	C	
C86		✻	C93-1771-05	CHIP C	7PF	C	K
C86			C93-1776-05	CHIP C	9PF	C	K2
C87			CK73GB1H471K	CHIP C	470PF	K	
C89		✻	C93-1773-05	CHIP C	8PF	C	K
C89			C93-1778-05	CHIP C	10PF	J	K2
C91			C93-0553-05	CHIP C	3.0PF	C	
C92			C93-0560-05	CHIP C	10PF	J	K
C92			C93-0562-05	CHIP C	15PF	J	K2

Ref. No.	Address	New parts	Parts No.	Description			Desti-nation
C93		✻	C93-1786-05	CHIP C	22PF	J	K
C94			CC73FCH1H010B	CHIP C	1.0PF	B	K
C201			CK73GB1H471K	CHIP C	470PF	K	
C204			CK73GB1H471K	CHIP C	470PF	K	
C206			CK73GB1H104K	CHIP C	0.10UF	K	
C207			CK73GB1H471K	CHIP C	470PF	K	
C213			CK73GB1H471K	CHIP C	470PF	K	
C215			CK73GB1H104K	CHIP C	0.10UF	K	
C216			CK73GB1H471K	CHIP C	470PF	K	
C217			CD04AZ1V100M	ELECTRO	10UF	35WV	
C218,219			CK73GB1H471K	CHIP C	470PF	K	
C220			CD04AZ1V102M	ELECTRO	1000UF	35WV	
C221			CK73GB1H471K	CHIP C	470PF	K	
C222			CK73GB1H104K	CHIP C	0.10UF	K	
C223			CK73GB1H471K	CHIP C	470PF	K	
C224			CK73GB1H104K	CHIP C	0.10UF	K	
C225-233			CK73GB1H471K	CHIP C	470PF	K	
C234			CD04BQ1H101M	ELECTRO	100UF	50WV	
C235			CC73GCH1H220J	CHIP C	22PF	J	
C236			CC73GCH1H101J	CHIP C	100PF	J	
C237,238			CK73GB1H471K	CHIP C	470PF	K	
C239			CC73GCH1H220J	CHIP C	22PF	J	
C240			CK73GB1H104K	CHIP C	0.10UF	K	
C241,242			CK73GB1H471K	CHIP C	470PF	K	
C244-247			CK73GB1H471K	CHIP C	470PF	K	
C301			CC73GCH1H470J	CHIP C	47PF	J	
C302			CC73GCH1H220J	CHIP C	22PF	J	
C303			CC73GCH1H150J	CHIP C	15PF	J	
C304			CC73GCH1H101J	CHIP C	100PF	J	
101	2C		E37-1473-05	LEAD WIRE WITH CONNECTOR (X45-X53)			
CN1			E04-0154-05	PIN SOCKET			
CN3			E23-1262-05	TERMINAL			
CN4-7			E23-1330-05	TERMINAL			
CN8-10			E23-1262-05	TERMINAL			
CN11			E23-1330-05	TERMINAL			
CN201,202			E23-0462-05	TERMINAL			
CN203			E41-2672-05	PIN ASSY			
CN204			E41-2743-05	PIN ASSY			
CN205			E41-1682-05	PIN ASSY			
J401,402			E58-0533-05	MODULAR JACK			
F1			F53-0392-05	FUSE (3A)			
102	1B		G02-1856-04	EARTH SPRING			
103	2C		J21-8616-04	MOUNTING HARDWARE (MODULAR)			
CN301			J13-0071-05	FUSE HOLDER			
L1			L41-1578-14	SMALL FIXED INDUCTOR (15NH)			
L2			L41-8268-14	SMALL FIXED INDUCTOR (8.2NH)			
L3			L41-1578-14	SMALL FIXED INDUCTOR (15NH)			
L4			L34-4604-15	AIR-CORE COIL			
L5			L34-4556-05	AIR-CORE COIL			
L6			L34-4520-05	AIR-CORE COIL			
L7,8			L41-1085-14	SMALL FIXED INDUCTOR (100NH)			
L9			L34-4667-05	AIR-CORE COIL			
L10			L34-4743-05	AIR-CORE COIL			K
L10			L34-4758-05	AIR-CORE COIL			K2
L11-13			L34-4517-05	AIR-CORE COIL			
L14			L41-4763-14	SMALL FIXED INDUCTOR (4.7NH)			
L15			L92-0179-05	CHIP FERRITE			K

PARTS LIST

FINAL UNIT (X45-3930-XX)
CONTROL UNIT (X53-4490-10)

Ref. No.	Address	New parts	Parts No.	Description				Destination
R1			RK73GB2A181J	CHIP R	180	J	1/10W	K2
R1			RK73GB2A271J	CHIP R	270	J	1/10W	K
R2			RK73GB2A180J	CHIP R	18	J	1/10W	K
R2			RK73GB2A270J	CHIP R	27	J	1/10W	K2
R3			RK73GB2A181J	CHIP R	180	J	1/10W	K2
R3			RK73GB2A271J	CHIP R	270	J	1/10W	K
R4			RK73FB2B151J	CHIP R	150	J	1/8W	
R5			RK73GB2A392J	CHIP R	3.9K	J	1/10W	
R6			RK73GB2A332J	CHIP R	3.3K	J	1/10W	
R7			RK73GB2A221J	CHIP R	220	J	1/10W	
R8			RK73GB2A180J	CHIP R	18	J	1/10W	
R10			RK73GB2A123J	CHIP R	12K	J	1/10W	
R11			RK73FB2B221J	CHIP R	220	J	1/8W	
R12			RK73GB2A103J	CHIP R	10K	J	1/10W	
R13			RK73RB2H100J	CHIP R	10	J	1/2W	
R14			RK73FB2B221J	CHIP R	220	J	1/8W	
R16			RK73RB2H821J	CHIP R	820	J	1/2W	
R17			RK73RB2H5R6J	CHIP R	5.6	J	1/2W	
R18			RK73RB2H821J	CHIP R	820	J	1/2W	
R19			RK73FB2B103J	CHIP R	10K	J	1/8W	
R20			RK73EB2E221J	CHIP R	220	J	1/4W	
R21			RK73FB2B123J	CHIP R	12K	J	1/8W	
R22-25			RK73GB2A000J	CHIP R	0.0	J	1/10W	
R26			RK73FB2B103J	CHIP R	10K	J	1/8W	
R27			RK73RB2H101J	CHIP R	100	J	1/2W	K2
R27			RK73RB2H221J	CHIP R	220	J	1/2W	K
R28			RK73FB2B103J	CHIP R	10K	J	1/8W	
R29			RK73FB2B000J	CHIP R	0.0	J	1/8W	
R30			RK73FB2B750J	CHIP R	75	J	1/8W	
R31			RK73GB2A000J	CHIP R	0.0	J	1/10W	
R32			RK73FB2B181J	CHIP R	180	J	1/8W	
R33			RK73GB2A274J	CHIP R	270K	J	1/10W	
R34,35			RK73GB2A000J	CHIP R	0.0	J	1/10W	
R36,37			RK73FB2B000J	CHIP R	0.0	J	1/8W	
R38			RK73FB2B750J	CHIP R	75	J	1/8W	K
R38			RK73FB2B820J	CHIP R	82	J	1/8W	K2
R39			RK73PB2H121J	CHIP R	120	J	1/2W	
R40			RK73GB2A000J	CHIP R	0.0	J	1/10W	
R41			RK73FB2B224J	CHIP R	220K	J	1/8W	
R201			RK73GB2A273J	CHIP R	27K	J	1/10W	
R202			RK73GB2A104J	CHIP R	100K	J	1/10W	
R203			RK73GB2A683J	CHIP R	68K	J	1/10W	
R204			RK73GB2A473J	CHIP R	47K	J	1/10W	
R205,206			RK73GB2A104J	CHIP R	100K	J	1/10W	
R207			RK73GB2A154J	CHIP R	150K	J	1/10W	
R209			RK73GB2A104J	CHIP R	100K	J	1/10W	K2
R209			RK73GB2A334J	CHIP R	330K	J	1/10W	K
R211			RK73GB2A101J	CHIP R	100	J	1/10W	
R213			RK73GB2A334J	CHIP R	330K	J	1/10W	
R215			RK73GB2A332J	CHIP R	3.3K	J	1/10W	
R217			RK73GB2A333J	CHIP R	33K	J	1/10W	
R218,219			RK73GB2A104J	CHIP R	100K	J	1/10W	
R220			RK73GB2A224J	CHIP R	220K	J	1/10W	
R222			RK73GB2A123J	CHIP R	12K	J	1/10W	K
R222			RK73GB2A473J	CHIP R	47K	J	1/10W	K2
R225			RK73GB2A000J	CHIP R	0.0	J	1/10W	
R226			RK73GB2A332J	CHIP R	3.3K	J	1/10W	
R228,229			RK73GB2A473J	CHIP R	47K	J	1/10W	
R230,231			RK73GB2A472J	CHIP R	4.7K	J	1/10W	
R232,233			RK73GB2A474J	CHIP R	470K	J	1/10W	

Ref. No.	Address	New parts	Parts No.	Description				Destination
R235,236			RK73PB2H100J	CHIP R	10	J	1/2W	
R237			RK73GB2A274J	CHIP R	270K	J	1/10W	
R351			RK73GB2A000J	CHIP R	0.0	J	1/10W	K2
R352			RK73GB2A000J	CHIP R	0.0	J	1/10W	K
R355			RK73GB2A000J	CHIP R	0.0	J	1/10W	
D1			HSM88AS-E	DIODE				
D2			MA2S111-F	DIODE				
D3			HSM88AS-E	DIODE				
D4-7			L7091CER	DIODE				
D8			CSA70-401L	SURGE ABSORBER				
D9			HVC131	DIODE				K
D201			02DZ6.2F-Y	ZENER DIODE				
D202			22ZR-10D	SURGE ABSORBER				
D203			1SS355	DIODE				
D301			DSA3A1	DIODE				
IC201,202			TA75W01FUF	MOS-IC				
IC203			NJM78M08FA-ZB	ANALOGUE IC				
Q1			2SC5092-F	TRANSISTOR				
Q2			RD01MUS1-T113	FET				
Q3	2B		PD55008S-E	FET				
Q4	2B		RD60HUF1-101	FET				
Q203,204			2SJ484	FET				
Q205,206			SSM3K15TE(F)	FET				
Q207			DTD123EK	DIGITAL TRANSISTOR				
TH201			S1R103J440H	THERMISTOR				
CONTROL UNIT (X53-4490-10)								
C7-10			CC73HCH1H101J	CHIP C	100PF	J		
C11			CK73HB1A105K	CHIP C	1.0UF	K		
C12-15			CC73HCH1H101J	CHIP C	100PF	J		
C18,19			CK73GB1C104K	CHIP C	0.10UF	K		
C20			CK73HB1A105K	CHIP C	1.0UF	K		
C21,22			CK73GB1C104K	CHIP C	0.10UF	K		
C23-30			CK73HB1A104K	CHIP C	0.10UF	K		
C31			CK73HB1H102K	CHIP C	1000PF	K		
C32,33			CK73HB1A104K	CHIP C	0.10UF	K		
C34			CK73HB1A105K	CHIP C	1.0UF	K		
C35,36			CK73GB1C104K	CHIP C	0.10UF	K		
C38			CK73HB1H102K	CHIP C	1000PF	K		
C39			CK73HB1A104K	CHIP C	0.10UF	K		
C40			CK73HB1A105K	CHIP C	1.0UF	K		
C41-45			CK73HB1A104K	CHIP C	0.10UF	K		
C46			CK73HB1A105K	CHIP C	1.0UF	K		
C47			CK73HB1H102K	CHIP C	1000PF	K		
C49			CK73HB1A105K	CHIP C	1.0UF	K		
C50			CK73HB1A104K	CHIP C	0.10UF	K		
C51			CK73HB1A105K	CHIP C	1.0UF	K		
C52			CC73HCH1H270J	CHIP C	27PF	J		
C56,57			CK73HB1A104K	CHIP C	0.10UF	K		
C58			CK73HB1H681K	CHIP C	680PF	K		
C60,61			CK73HB1H102K	CHIP C	1000PF	K		
C62,63			CK73FB0J106K	CHIP C	10UF	K		
C64			CK73HB1A105K	CHIP C	1.0UF	K		
C65			CK73HB1H102K	CHIP C	1000PF	K		
C66			CK73HB1E103K	CHIP C	0.010UF	K		
C67			CK73HB1A104K	CHIP C	0.10UF	K		
C68			CK73HB1E103K	CHIP C	0.010UF	K		
C69			CK73HB1H102K	CHIP C	1000PF	K		
C70			CK73HB1A224K	CHIP C	0.22UF	K		
C72			CK73HB1A224K	CHIP C	0.22UF	K		

If a part reference number is listed in a shaded box, that part does not come with the PCB.

PARTS LIST

CONTROL UNIT (X53-4490-10)

Ref. No.	Address	New parts	Parts No.	Description			Desti-nation
C73			CC73HCH1H470J	CHIP C	47PF	J	
C74			CC73HCH1H101J	CHIP C	100PF	J	
C75			CK73GB1C104K	CHIP C	0.10UF	K	
C76			CC73HCH1H470J	CHIP C	47PF	J	
C77			CK73HB1A104K	CHIP C	0.10UF	K	
C79,80			CK73HB1E103K	CHIP C	0.010UF	K	
C81			CK73HB1H102K	CHIP C	1000PF	K	
C82,83			CC73HCH1H101J	CHIP C	100PF	J	
C84-86			CK73HB1H682K	CHIP C	6800PF	K	
C87			CK73HB1H102K	CHIP C	1000PF	K	
C88			CK73GB1C104K	CHIP C	0.10UF	K	
C89			CK73HB1H102K	CHIP C	1000PF	K	
C90			CK73GB1C104K	CHIP C	0.10UF	K	
C91			CK73HB1A104K	CHIP C	0.10UF	K	
C92			CK73HB1E103K	CHIP C	0.010UF	K	
C93			CS77CP0J100M	CHIP TNTL	10UF	6.3WV	
C94			CK73HB1A104K	CHIP C	0.10UF	K	
C95,96			CC73HCH1H020C	CHIP C	2.0PF	C	
C97			CK73HB1H102K	CHIP C	1000PF	K	
C98-100			CK73HB1A104K	CHIP C	0.10UF	K	
C101			CK73HB1E103K	CHIP C	0.010UF	K	
C102			CK73HB1A105K	CHIP C	1.0UF	K	
C103			CK73HB1H102K	CHIP C	1000PF	K	
C104-107			CK73GB1C104K	CHIP C	0.10UF	K	
C108			CC73HCH1H020C	CHIP C	2.0PF	C	
C109			CS77CP0J100M	CHIP TNTL	10UF	6.3WV	
C110,111			CC73HCH1H101J	CHIP C	100PF	J	
C112			CK73HB1A104K	CHIP C	0.10UF	K	
C114			CC73HCH1H101J	CHIP C	100PF	J	
C115-119			CK73HB1A104K	CHIP C	0.10UF	K	
C120			CK73HB1A105K	CHIP C	1.0UF	K	
C121			CK73HB1H102K	CHIP C	1000PF	K	
C122-126			CK73HB1A104K	CHIP C	0.10UF	K	
C127			CK73HB1E103K	CHIP C	0.010UF	K	
C128			CK73HB1A105K	CHIP C	1.0UF	K	
C129			CK73HB1H102K	CHIP C	1000PF	K	
C130,131			CK73HB1A104K	CHIP C	0.10UF	K	
C132			CK73HB1E103K	CHIP C	0.010UF	K	
C133			CK73HB1H102K	CHIP C	1000PF	K	
C134			CK73HB1E103K	CHIP C	0.010UF	K	
C135,136			CK73HB1H102K	CHIP C	1000PF	K	
C137			CK73HB1E103K	CHIP C	0.010UF	K	
C138			CC73HCH1H101J	CHIP C	100PF	J	
C139			CK73HB1E103K	CHIP C	0.010UF	K	
C140			CK73GB1C104K	CHIP C	0.10UF	K	
C141,142			CK73HB1H102K	CHIP C	1000PF	K	
C143			CK73HB1E103K	CHIP C	0.010UF	K	
C144-146			CK73HB1H102K	CHIP C	1000PF	K	
C147			CK73HB1E103K	CHIP C	0.010UF	K	
C148			CK73HB1H122K	CHIP C	1200PF	K	
C149			CK73HB1H102K	CHIP C	1000PF	K	
C150			CK73HB1E103K	CHIP C	0.010UF	K	
C151-155			CK73HB1H102K	CHIP C	1000PF	K	
C156			CC73HCH1H221J	CHIP C	220PF	J	
C157			CK73HB1H102K	CHIP C	1000PF	K	
C158			CK73HB1A104K	CHIP C	0.10UF	K	
C159			CK73HB1E103K	CHIP C	0.010UF	K	
C160			CC73HCH1H101J	CHIP C	100PF	J	
C161			CK73HB1H102K	CHIP C	1000PF	K	
C162			CC73HCH1H101J	CHIP C	100PF	J	

Ref. No.	Address	New parts	Parts No.	Description			Desti-nation
C164			CK73HB1H102K	CHIP C	1000PF	K	
C166			CK73HB1E103K	CHIP C	0.010UF	K	
C167			CC73HCH1H101J	CHIP C	100PF	J	
C170,171			CK73HB1H102K	CHIP C	1000PF	K	
C175,176			CK73HB1H102K	CHIP C	1000PF	K	
C179,180			CK73HB1H102K	CHIP C	1000PF	K	
C182			CK73HB1H102K	CHIP C	1000PF	K	
C184,185			CK73HB1H102K	CHIP C	1000PF	K	
C186			CC73HCH1H101J	CHIP C	100PF	J	
C187			CK73HB1H102K	CHIP C	1000PF	K	
C188			CC73HCH1H101J	CHIP C	100PF	J	
C189			CK73HB1H102K	CHIP C	1000PF	K	
C190			CC73HCH1H101J	CHIP C	100PF	J	
C191			CK73HB1H102K	CHIP C	1000PF	K	
C192			CK73HB1E103K	CHIP C	0.010UF	K	
C193			CC73HCH1H101J	CHIP C	100PF	J	
C194-197			CK73HB1H102K	CHIP C	1000PF	K	
C198			CC73HCH1H101J	CHIP C	100PF	J	
C199			CK73HB1E103K	CHIP C	0.010UF	K	
C200			CC73HCH1H101J	CHIP C	100PF	J	
C201			CK73HB1H102K	CHIP C	1000PF	K	
C202			CC73HCH1H101J	CHIP C	100PF	J	
C203			CK73HB1H102K	CHIP C	1000PF	K	
C205			CK73HB1H102K	CHIP C	1000PF	K	
C206			CC73HCH1H101J	CHIP C	100PF	J	
C207			CK73HB1E103K	CHIP C	0.010UF	K	
C209-212			CK73HB1H102K	CHIP C	1000PF	K	
C213			CK73HB1E103K	CHIP C	0.010UF	K	
C215,216			CK73HB1H102K	CHIP C	1000PF	K	
C218			CC73HCH1H101J	CHIP C	100PF	J	
C219-223			CK73HB1H102K	CHIP C	1000PF	K	
C224			CC73HCH1H101J	CHIP C	100PF	J	
C225,226			CK73HB1H102K	CHIP C	1000PF	K	
C227			CC73HCH1H101J	CHIP C	100PF	J	
C228,229			CK73HB1H102K	CHIP C	1000PF	K	
C230			CC73HCH1H101J	CHIP C	100PF	J	
C232			CK73HB1H102K	CHIP C	1000PF	K	
C233			CC73HCH1H101J	CHIP C	100PF	J	
C235			CK73HB1E103K	CHIP C	0.010UF	K	
C237			CC73HCH1H101J	CHIP C	100PF	J	
C239			CC73HCH1H101J	CHIP C	100PF	J	
C240-242			CK73HB1H102K	CHIP C	1000PF	K	
C243			CC73HCH1H101J	CHIP C	100PF	J	
C244			CK73HB1H102K	CHIP C	1000PF	K	
C245,246			CC73HCH1H101J	CHIP C	100PF	J	
C247			CK73HB1H102K	CHIP C	1000PF	K	
C249			CK73HB1H102K	CHIP C	1000PF	K	
C250			CC73HCH1H101J	CHIP C	100PF	J	
C252			CK73HB1H102K	CHIP C	1000PF	K	
C254			CC73HCH1H101J	CHIP C	100PF	J	
C256			CC73HCH1H101J	CHIP C	100PF	J	
C257			CK73HB1H102K	CHIP C	1000PF	K	
C258			CC73HCH1H101J	CHIP C	100PF	J	
C259,260			CK73HB1A104K	CHIP C	0.10UF	K	
C301,302			C92-0905-05	OS-CON	47UF	35WV	
C303,304			C93-1810-05	CHIP C	4.7UF	K	
C306			CK73HB1H471K	CHIP C	470PF	K	
C308			CK73EB1H474K	CHIP C	0.47UF	K	
C310,311			CE32AU1C330M	CHIP EL	33UF	16WV	
C312			CE32BM1E470M	CHIP EL	47UF	25WV	

PARTS LIST

CONTROL UNIT (X53-4490-10)

Ref. No.	Address	New parts	Parts No.	Description			Destination
C313			CK73HB1E223K	CHIP C	0.022UF	K	
C314			CK73HB1H102K	CHIP C	1000PF	K	
C315-317			CE32BM1E470M	CHIP EL	47UF	25WV	
C318-321			CK73HB1H102K	CHIP C	1000PF	K	
C322			CE32BM1E470M	CHIP EL	47UF	25WV	
C323			CK73HB1H102K	CHIP C	1000PF	K	
C324			CE32BM1E470M	CHIP EL	47UF	25WV	
C325,326			CK73HB1H102K	CHIP C	1000PF	K	
C327-329			CE32BM1E470M	CHIP EL	47UF	25WV	
C330,331			CK73HB1H102K	CHIP C	1000PF	K	
C332			CE32BM1E470M	CHIP EL	47UF	25WV	
C333			CK73HB1A104K	CHIP C	0.10UF	K	
C334			CK73HB1E103K	CHIP C	0.010UF	K	
C335			CK73HB1H471K	CHIP C	470PF	K	
C336			CK73HB1E103K	CHIP C	0.010UF	K	
C337			CK73HB1H102K	CHIP C	1000PF	K	
C401			CK73HB1E103K	CHIP C	0.010UF	K	
C402			CC73HCH1H101J	CHIP C	100PF	J	
C403			CK73HB1A105K	CHIP C	1.0UF	K	
C404			C90-4120-05	ELECTRO	470UF	35WV	
C405			CK73HB1A104K	CHIP C	0.10UF	K	
C406,407			CK73HB1A105K	CHIP C	1.0UF	K	
C408,409			C93-0912-05	CHIP C	100UF	M	
C410			CK73HB1A105K	CHIP C	1.0UF	K	
C412			CK73FB0J106K	CHIP C	10UF	K	
C413			CK73HB1H102K	CHIP C	1000PF	K	
C414			CK73HB1A105K	CHIP C	1.0UF	K	
C415			CD04AY1E470M	ELECTRO	47UF	25WV	
C416			CK73HB1H102K	CHIP C	1000PF	K	
C417			CK73HB1H222K	CHIP C	2200PF	K	
C418			CC73HCH1H391J	CHIP C	390PF	J	
C419			CK73HB1H152K	CHIP C	1500PF	K	
C420			CC73HCH1H221J	CHIP C	220PF	J	
C421			CK73FB0J106K	CHIP C	10UF	K	
C422			CD04AY1E470M	ELECTRO	47UF	25WV	
C423			CK73HB1H471K	CHIP C	470PF	K	
C424			CC73HCH1H331J	CHIP C	330PF	J	
C425			CD04AY1E470M	ELECTRO	47UF	25WV	
C426			CK73HB1A104K	CHIP C	0.10UF	K	
C427			CK73HB1H471K	CHIP C	470PF	K	
C428			CK73HB1A105K	CHIP C	1.0UF	K	
C429			CK73HB1A104K	CHIP C	0.10UF	K	
C430			C92-0777-05	ELECTRO	1000UF	25WV	
C432			CK73HB1A104K	CHIP C	0.10UF	K	
C433			CC73HCH1H181J	CHIP C	180PF	J	
C434,435			CC73HCH1H101J	CHIP C	100PF	J	
C436			CC73HCH1H221J	CHIP C	220PF	J	
C438			C93-0912-05	CHIP C	100UF	M	
C441			C93-0912-05	CHIP C	100UF	M	
C442			CK73HB1A105K	CHIP C	1.0UF	K	
C443			CK73HB1A104K	CHIP C	0.10UF	K	
C445			CK73HB1A105K	CHIP C	1.0UF	K	
C446			CK73HB1A104K	CHIP C	0.10UF	K	
C450,451			CK73HB1A105K	CHIP C	1.0UF	K	
C455			CC73HCH1H101J	CHIP C	100PF	J	
C456			CC73HCH1H221J	CHIP C	220PF	J	
C457			CK73HB1A105K	CHIP C	1.0UF	K	
C459			CC73HCH1H221J	CHIP C	220PF	J	
C460-462			CK73HB1A104K	CHIP C	0.10UF	K	
C463			CC73HCH1H331J	CHIP C	330PF	J	

Ref. No.	Address	New parts	Parts No.	Description				Destination
C464			CC73HCH1H101J	CHIP C	100PF	J		
C465			CK73HB1H152K	CHIP C	1500PF	K		
C466			CK73HB1A105K	CHIP C	1.0UF	K		
C469			CK73HB1A105K	CHIP C	1.0UF	K		
C470,471			CK73HB1H102K	CHIP C	1000PF	K		
C472,473			CK73HB1E103K	CHIP C	0.010UF	K		
CN5			E41-1481-05	PIN ASSY				
CN38			E40-6656-05	PIN ASSY				
CN39			E04-0193-05	PIN SOCKET				
CN40			E40-6102-05	PIN ASSY				
CN41			E41-3086-05	PIN ASSY				
CN42			E41-3090-05	PIN ASSY				
CN43			E41-2671-05	PIN ASSY				
CN44			E40-5960-05	PIN ASSY				
CN301			E41-2672-05	PIN ASSY				
CN302			J19-5386-05	HOLDER (LITHIUM CELL)				
L1			L92-0467-05	CHIP FERRITE				
L2,3			L33-1500-05	CHOKE COIL				
L4			L92-0467-05	CHIP FERRITE				
L5-7			L92-0162-05	BEADS CORE				
L8			L92-0639-05	CHIP FERRITE				
L9-11			L92-0467-05	CHIP FERRITE				
L14-16			L92-0467-05	CHIP FERRITE				
L17			L92-0639-05	CHIP FERRITE				
L18			L92-0162-05	BEADS CORE				
L20			L92-0162-05	BEADS CORE				
L22,23			L92-0171-05	BEADS CORE				
L301-304			L92-0639-05	CHIP FERRITE				
L305			L33-1541-05	SMALL FIXED INDUCTOR (10UH)				
L306-309			L92-0467-05	CHIP FERRITE				
L311			L92-0162-05	BEADS CORE				
L312			L92-0467-05	CHIP FERRITE				
L313,314			L92-0639-05	CHIP FERRITE				
L315-317			L92-0467-05	CHIP FERRITE				
X1			L77-3015-05	TCXO (18.432MHZ)				
X2			L77-1802-05	CRYSTAL RESONATOR (32.768KHZ)				
CP1-8			RK74HB1J334J	CHIP-COM	330K	J	1/16W	
R3-9			RK73HB1J104J	CHIP R	100K	J	1/16W	
R10-13			RK73EB2E101J	CHIP R	100	J	1/4W	
R14			RK73HB1J000J	CHIP R	0.0	J	1/16W	
R15			RK73HB1J104J	CHIP R	100K	J	1/16W	
R18			RK73HB1J104J	CHIP R	100K	J	1/16W	
R22,23			RK73HB1J104J	CHIP R	100K	J	1/16W	
R24			RK73HB1J000J	CHIP R	0.0	J	1/16W	
R25,26			RK73HB1J103J	CHIP R	10K	J	1/16W	
R27,28			RK73HB1J473J	CHIP R	47K	J	1/16W	
R29			RK73HB1J000J	CHIP R	0.0	J	1/16W	
R30			RK73HB1J474J	CHIP R	470K	J	1/16W	
R32,33			RK73HB1J472J	CHIP R	4.7K	J	1/16W	
R34-36			RK73HB1J104J	CHIP R	100K	J	1/16W	
R37			RK73HB1J103J	CHIP R	10K	J	1/16W	
R38			RK73HB1J104J	CHIP R	100K	J	1/16W	
R40-42			RK73HB1J104J	CHIP R	100K	J	1/16W	
R43-50			RK73HB1J000J	CHIP R	0.0	J	1/16W	
R51			RK73HB1J104J	CHIP R	100K	J	1/16W	
R52			RK73HB1J220J	CHIP R	22	J	1/16W	
R53-57			RK73HB1J104J	CHIP R	100K	J	1/16W	
R58			RK73HB1J101J	CHIP R	100	J	1/16W	

PARTS LIST

CONTROL UNIT (X53-4490-10)

Ref. No.	Address	New parts	Parts No.	Description				Desti-nation
R59-61			RK73HB1J000J	CHIP R	0.0	J	1/16W	
R62			RK73HB1J101J	CHIP R	100	J	1/16W	
R63			RK73HB1J000J	CHIP R	0.0	J	1/16W	
R64,65			RK73HB1J101J	CHIP R	100	J	1/16W	
R66-73			RK73HB1J000J	CHIP R	0.0	J	1/16W	
R74,75			RK73HB1J104J	CHIP R	100K	J	1/16W	
R77			RK73HB1J151J	CHIP R	150	J	1/16W	
R78			RK73HB1J102J	CHIP R	1.0K	J	1/16W	
R79			RK73HB1J000J	CHIP R	0.0	J	1/16W	
R80			RK73HB1J823J	CHIP R	82K	J	1/16W	
R81-83			RK73HB1J104J	CHIP R	100K	J	1/16W	
R85			RK73HB1J103J	CHIP R	10K	J	1/16W	
R87			RK73HB1J334J	CHIP R	330K	J	1/16W	
R88			RK73HB1J100J	CHIP R	10	J	1/16W	
R89			RK73HB1J332J	CHIP R	3.3K	J	1/16W	
R90			RK73HB1J471J	CHIP R	470	J	1/16W	
R92-94			RK73HB1J104J	CHIP R	100K	J	1/16W	
R95			RK73HB1J220J	CHIP R	22	J	1/16W	
R99,100			RK73HB1J104J	CHIP R	100K	J	1/16W	
R101			RK73HB1J103J	CHIP R	10K	J	1/16W	
R102,103			RK73HB1J104J	CHIP R	100K	J	1/16W	
R104			RK73HB1J393J	CHIP R	39K	J	1/16W	
R105			RK73HB1J334J	CHIP R	330K	J	1/16W	
R106			RK73HB1J100J	CHIP R	10	J	1/16W	
R107			RK73HB1J103J	CHIP R	10K	J	1/16W	
R108			RK73HB1J184J	CHIP R	180K	J	1/16W	
R109			RK73HB1J104J	CHIP R	100K	J	1/16W	
R110			RK73HB1J682J	CHIP R	6.8K	J	1/16W	
R111,112			RK73HB1J104J	CHIP R	100K	J	1/16W	
R113			RK73HB1J102J	CHIP R	1.0K	J	1/16W	
R114,115			RK73HB1J220J	CHIP R	22	J	1/16W	
R116,117			RK73HB1J472J	CHIP R	4.7K	J	1/16W	
R118			RK73HB1J000J	CHIP R	0.0	J	1/16W	
R119			RK73HB1J474J	CHIP R	470K	J	1/16W	
R121			RK73HB1J104J	CHIP R	100K	J	1/16W	
R122			RK73HB1J103J	CHIP R	10K	J	1/16W	
R123			RK73HB1J473J	CHIP R	47K	J	1/16W	
R124			RK73HB1J103J	CHIP R	10K	J	1/16W	
R126			RK73HB1J104J	CHIP R	100K	J	1/16W	
R127			RK73HB1J102J	CHIP R	1.0K	J	1/16W	
R128			RK73HB1J104J	CHIP R	100K	J	1/16W	
R129,130			RK73HB1J101J	CHIP R	100	J	1/16W	
R131			RK73HB1J472J	CHIP R	4.7K	J	1/16W	
R132			RK73HB1J102J	CHIP R	1.0K	J	1/16W	
R133			RK73HB1J472J	CHIP R	4.7K	J	1/16W	
R135			RK73HB1J104J	CHIP R	100K	J	1/16W	
R137,138			RK73HB1J104J	CHIP R	100K	J	1/16W	
R141,142			RK73HB1J104J	CHIP R	100K	J	1/16W	
R143,144			RK73HB1J000J	CHIP R	0.0	J	1/16W	
R145			RK73HB1J104J	CHIP R	100K	J	1/16W	
R146,147			RK73HB1J101J	CHIP R	100	J	1/16W	
R148			RK73HB1J563J	CHIP R	56K	J	1/16W	
R149-151			RK73HB1J104J	CHIP R	100K	J	1/16W	
R152			RK73HB1J102J	CHIP R	1.0K	J	1/16W	
R153			RK73HB1J473J	CHIP R	47K	J	1/16W	
R154,155			RK73HB1J104J	CHIP R	100K	J	1/16W	
R156,157			RK73HB1J474J	CHIP R	470K	J	1/16W	
R159			RK73HB1J103J	CHIP R	10K	J	1/16W	
R160			RK73HB1J101J	CHIP R	100	J	1/16W	
R161			RK73HB1J103J	CHIP R	10K	J	1/16W	

Ref. No.	Address	New parts	Parts No.	Description				Desti-nation
R162			RK73HB1J104J	CHIP R	100K	J	1/16W	
R163			RK73HH1J334D	CHIP R	330K	D	1/16W	
R164			RK73HH1J104D	CHIP R	100K	D	1/16W	
R165,166			RK73HB1J104J	CHIP R	100K	J	1/16W	
R167-169			RK73HB1J473J	CHIP R	47K	J	1/16W	
R170			RK73HH1J124D	CHIP R	120K	D	1/16W	
R171			RK73HB1J473J	CHIP R	47K	J	1/16W	
R172			RK73HB1J103J	CHIP R	10K	J	1/16W	
R173,174			RK73HB1J473J	CHIP R	47K	J	1/16W	
R175			RK73HB1J683J	CHIP R	68K	J	1/16W	
R176-178			RK73HB1J473J	CHIP R	47K	J	1/16W	
R179			RK73HB1J000J	CHIP R	0.0	J	1/16W	
R180-183			RK73HB1J473J	CHIP R	47K	J	1/16W	
R184			RK73HB1J000J	CHIP R	0.0	J	1/16W	
R185			RK73HB1J473J	CHIP R	47K	J	1/16W	
R186			RK73HB1J103J	CHIP R	10K	J	1/16W	
R187			RK73HB1J473J	CHIP R	47K	J	1/16W	
R190			RK73HB1J000J	CHIP R	0.0	J	1/16W	
R191			RK73HB1J474J	CHIP R	470K	J	1/16W	
R194			RK73HB1J103J	CHIP R	10K	J	1/16W	
R196,197			RK73HB1J103J	CHIP R	10K	J	1/16W	
R199			RK73HB1J103J	CHIP R	10K	J	1/16W	
R204			RK73HB1J103J	CHIP R	10K	J	1/16W	
R205-208			RK73HB1J102J	CHIP R	1.0K	J	1/16W	
R209			RK73HB1J121J	CHIP R	120	J	1/16W	
R210			RK73HB1J102J	CHIP R	1.0K	J	1/16W	
R211,212			RK73HB1J101J	CHIP R	100	J	1/16W	
R213-219			RK73HB1J102J	CHIP R	1.0K	J	1/16W	
R220			RK73HB1J471J	CHIP R	470	J	1/16W	
R221			RK73HB1J102J	CHIP R	1.0K	J	1/16W	
R222			RK73HB1J101J	CHIP R	100	J	1/16W	
R223			RK73HB1J102J	CHIP R	1.0K	J	1/16W	
R224			RK73HB1J121J	CHIP R	120	J	1/16W	
R225			RK73HB1J102J	CHIP R	1.0K	J	1/16W	
R226			RK73HB1J103J	CHIP R	10K	J	1/16W	
R227-230			RK73HB1J122J	CHIP R	1.2K	J	1/16W	
R231-238			RK73HB1J000J	CHIP R	0.0	J	1/16W	
R241-253			RK73HB1J000J	CHIP R	0.0	J	1/16W	
R254			RK73HB1J103J	CHIP R	10K	J	1/16W	
R255-262			RK73HB1J000J	CHIP R	0.0	J	1/16W	
R263			RK73HB1J103J	CHIP R	10K	J	1/16W	
R265,266			RK73HB1J471J	CHIP R	470	J	1/16W	
R267			RK73HB1J103J	CHIP R	10K	J	1/16W	
R268			RK73HB1J000J	CHIP R	0.0	J	1/16W	
R269			RK73HB1J103J	CHIP R	10K	J	1/16W	
R270-275			RK73HB1J101J	CHIP R	100	J	1/16W	
R276			RK73HB1J471J	CHIP R	470	J	1/16W	
R277			RK73HB1J101J	CHIP R	100	J	1/16W	
R278,279			RK73HB1J471J	CHIP R	470	J	1/16W	
R280			RK73HB1J101J	CHIP R	100	J	1/16W	
R281			RS14KB3D5R6J	FL-PROOF RS	5.6	J	2W	
R282			RK73HB1J104J	CHIP R	100K	J	1/16W	
R301,302			RK73HB1J000J	CHIP R	0.0	J	1/16W	
R303			RK73HB1J104J	CHIP R	100K	J	1/16W	
R304			RK73HB1J223J	CHIP R	22K	J	1/16W	
R305			RK73HB1J183J	CHIP R	18K	J	1/16W	
R306			RK73HH1J184D	CHIP R	180K	D	1/16W	
R307			RK73HH1J273D	CHIP R	27K	D	1/16W	
R308			RK73HB1J473J	CHIP R	47K	J	1/16W	
R309			RK73PB2H220J	CHIP R	22	J	1/2W	

PARTS LIST

CONTROL UNIT (X53-4490-10)

Ref. No.	Address	New parts	Parts No.	Description				Destination
R310			RK73GB2A220J	CHIP R	22	J	1/10W	
R312			RK73HB1J104J	CHIP R	100K	J	1/16W	
R313			RK73HH1J822D	CHIP R	8.2K	D	1/16W	
R314			RK73HH1J332D	CHIP R	3.3K	D	1/16W	
R315			RK73HB1J471J	CHIP R	470	J	1/16W	
R316			RK73HB1J000J	CHIP R	0.0	J	1/16W	
R317,318			RK73HB1J472J	CHIP R	4.7K	J	1/16W	
R319			RK73HB1J103J	CHIP R	10K	J	1/16W	
R320			RK73HB1J101J	CHIP R	100	J	1/16W	
R321			RK73HH1J272D	CHIP R	2.7K	D	1/16W	
R322			RK73HH1J473D	CHIP R	47K	D	1/16W	
R323			RK73HB1J102J	CHIP R	1.0K	J	1/16W	
R324			RK73GB2A000J	CHIP R	0.0	J	1/10W	
R401			RK73HB1J473J	CHIP R	47K	J	1/16W	
R402			RK73HB1J472J	CHIP R	4.7K	J	1/16W	
R403			RK73HB1J473J	CHIP R	47K	J	1/16W	
R404			RK73HB1J472J	CHIP R	4.7K	J	1/16W	
R405			RK73HB1J473J	CHIP R	47K	J	1/16W	
R406,407			RK73HB1J104J	CHIP R	100K	J	1/16W	
R408,409			RK73HB1J103J	CHIP R	10K	J	1/16W	
R410			RK73HB1J104J	CHIP R	100K	J	1/16W	
R411			RK73HB1J472J	CHIP R	4.7K	J	1/16W	
R412			RK73HB1J123J	CHIP R	12K	J	1/16W	
R413			RK73HB1J223J	CHIP R	22K	J	1/16W	
R414			RK73HB1J153J	CHIP R	15K	J	1/16W	
R415			RK73HB1J123J	CHIP R	12K	J	1/16W	
R416			RK73HB1J224J	CHIP R	220K	J	1/16W	
R417,418			RK73HB1J104J	CHIP R	100K	J	1/16W	
R419			RK73HB1J105J	CHIP R	1.0M	J	1/16W	
R420			RK73HB1J000J	CHIP R	0.0	J	1/16W	
R421			RK73HB1J393J	CHIP R	39K	J	1/16W	
R422			RK73HB1J223J	CHIP R	22K	J	1/16W	
R423			RK73HB1J471J	CHIP R	470	J	1/16W	
R424			RK73HB1J153J	CHIP R	15K	J	1/16W	
R425			RK73HB1J223J	CHIP R	22K	J	1/16W	
R426			RK73HB1J103J	CHIP R	10K	J	1/16W	
R430			RK73HB1J2R7J	CHIP R	2.7	J	1/16W	
R431			RK73HB1J000J	CHIP R	0.0	J	1/16W	
R432			RK73HB1J333J	CHIP R	33K	J	1/16W	
R433			RK73HB1J104J	CHIP R	100K	J	1/16W	
R435			RK73HB1J473J	CHIP R	47K	J	1/16W	
R436			RK73HB1J124J	CHIP R	120K	J	1/16W	
R437			RK73HB1J333J	CHIP R	33K	J	1/16W	
R438			RK73HB1J104J	CHIP R	100K	J	1/16W	
R439			RK73HB1J473J	CHIP R	47K	J	1/16W	
R441			RK73HB1J104J	CHIP R	100K	J	1/16W	
R442			RK73HB1J683J	CHIP R	68K	J	1/16W	
R443			RK73HB1J000J	CHIP R	0.0	J	1/16W	
R444,445			RK73HB1J333J	CHIP R	33K	J	1/16W	
R446			RK73HB1J224J	CHIP R	220K	J	1/16W	
R450			RK73HB1J473J	CHIP R	47K	J	1/16W	
R451			RK73HB1J104J	CHIP R	100K	J	1/16W	
R452			RK73HB1J473J	CHIP R	47K	J	1/16W	
R457			RK73HB1J000J	CHIP R	0.0	J	1/16W	
R458-460			RK73HB1J101J	CHIP R	100	J	1/16W	
R461-463			RK73HB1J223J	CHIP R	22K	J	1/16W	
R464,465			RK73HB1J104J	CHIP R	100K	J	1/16W	
R466,467			RK73HB1J000J	CHIP R	0.0	J	1/16W	
R502			RK73HB1J000J	CHIP R	0.0	J	1/16W	
R508			RK73HB1J103J	CHIP R	10K	J	1/16W	

Ref. No.	Address	New parts	Parts No.	Description				Destination
R509			RK73HB1J223J	CHIP R	22K	J	1/16W	
R510			RK73HB1J103J	CHIP R	10K	J	1/16W	
R511			RK73HB1J000J	CHIP R	0.0	J	1/16W	
D1			RB706F-40	DIODE				
D2			MA2S111-F	DIODE				
D3			1SS388F	DIODE				
D4-11			DA204U	DIODE				
D12			1SS355	DIODE				
D13			02DZ18F-X	ZENER DIODE				
D14-16			DA204U	DIODE				
D18			DA204U	DIODE				
D20			DA204U	DIODE				
D22			DA204U	DIODE				
D23			1SS355	DIODE				
D24			02DZ18F-X	ZENER DIODE				
D26			DA204U	DIODE				
D28			DA204U	DIODE				
D29			1SS355	DIODE				
D30			02DZ18F-X	ZENER DIODE				
D31			1SS355	DIODE				
D32			02DZ18F-X	ZENER DIODE				
D35			1SS355	DIODE				
D36			02DZ18F-X	ZENER DIODE				
D37			SMD185F-2	VARISTOR				
D301			RSX301L-30	DIODE				
D302			1SS388F	DIODE				
D303			02DZ18F-X	ZENER DIODE				
D304,305			1SS388F	DIODE				
D401			1SS388F	DIODE				
IC3		✻	W05-1593-00	ROM IC				
IC4,5			ISL8485EIBZ	MOS-IC				
IC6			**Note 1 (BGA)**	MICROPROCESSOR IC				
IC7,8			TC7WT125FUF	MOS-IC				
IC9			**Note 1 (BGA)**	SRAM IC				
IC10,11			TC7SH125FU-F	MOS-IC				
IC12			TC7SH08FU-F	MOS-IC				
IC13			TC75W51FK(F)	MOS-IC				
IC14			AK4386VTP	MOS-IC				
IC15			TC75W51FK(F)	MOS-IC				
IC16			SM5023CNDH-G	MOS-IC				
IC17			R2023T	MOS-IC				
IC18			TC74VHCT244AFK	MOS-IC				
IC19			TC7MBD3245AFK	MOS-IC				
IC20			**Note 1 (BGA)**	MOS-IC				
IC21			ADM101EARMZ	MOS-IC				
IC22			MCP23017TE/ML	MOS-IC				
IC23			TC7WT125FUF	MOS-IC				
IC24			TC7SH08FU-F	MOS-IC				
IC25			TC7SH32FU-F	MOS-IC				
IC26			TC7SET08FU-F	MOS-IC				
IC27			TC75W51FK(F)	MOS-IC				
IC28			TC75S51FE(F)	MOS-IC				
IC301			LT3685EMSE	ANALOGUE IC				
IC302			XC6201P502PR	MOS-IC				
IC303			XC6204B332P1	ANALOGUE IC				
IC304			XC6205B152PRN	ANALOGUE IC				
IC305			XC6205B162PR	ANALOGUE IC				
IC306			XC6204B332P1	ANALOGUE IC				
IC307			XC61CN2702N	MOS-IC				

Note 1: This part cannot be replaced. Therefore, this part is not supplied as a service part.

PARTS LIST

CONTROL UNIT (X53-4490-10)
DISPLAY UNIT (X54-3730-20)
TX-RX UNIT (X57-7950-XX)

Ref. No.	Address	New parts	Parts No.	Description	Desti-nation
IC308			XC6109C29ANN	ANALOGUE IC	
IC401			TC7SH00FU-F	MOS-IC	
IC402			TC7S66FUF	MOS-IC	
IC403	3B		LA4422-E	BI-POLAR IC	
IC404			NJM2732V	BI-POLAR IC	
IC405			NJM2734V	BI-POLAR IC	
IC406			NJM2732V	BI-POLAR IC	
IC407			TC7W53FK(F)	MOS-IC	
IC411			NJM2734V	BI-POLAR IC	
IC412			M62364FP-F	MOS-IC	
Q4			2SC4617(S)	TRANSISTOR	
Q5			SSM3K15TE(F)	FET	
Q6-10			2SD2114K(W)	TRANSISTOR	
Q301			RT1N441U-T111	TRANSISTOR	
Q302			SSM3K15TE(F)	FET	
Q303			2SA1955A-F	TRANSISTOR	
Q401			RT1N141M-T111	TRANSISTOR	
Q402			2SJ506-E(S)	FET	
Q403			RT1N441M-T111	TRANSISTOR	
Q404			RT1N141M-T111	TRANSISTOR	
Q405			DTC363EU	DIGITAL TRANSISTOR	
TH1			ERTJ0EV104H	THERMISTOR	
DISPLAY UNIT (X54-3730-20)					
D503-505			B30-2151-05	LED (RED/GREEN)	
C501			CS77BA1A100M	CHIP TNTL 10UF 10WV	
C502,503			CS77AA1A1R5M	CHIP TNTL 1.5UF 10WV	
C504,505			CK73GB1C104K	CHIP C 0.10UF K	
C506			CC73GCH1H470J	CHIP C 47PF J	
C507,508			CK73GB1C104K	CHIP C 0.10UF K	
C509			CK73GB1H103K	CHIP C 0.010UF K	
C510			CS77BA1A100M	CHIP TNTL 10UF 10WV	
C511,512			CK73GB1E103K	CHIP C 0.010UF K	
C513-518			CC73GCH1H101J	CHIP C 100PF J	
C519,520			CK73GB1E103K	CHIP C 0.010UF K	
C521			CS77BA1A100M	CHIP TNTL 10UF 10WV	
C522			CK73GB1C104K	CHIP C 0.10UF K	
C523			CK73FB1E334K	CHIP C 0.33UF K	
C524			CS77BA1A100M	CHIP TNTL 10UF 10WV	
C525			CK73GB1C104K	CHIP C 0.10UF K	
C526			CK73FB1E334K	CHIP C 0.33UF K	
C527			CK73GB1H102K	CHIP C 1000PF K	
C528			CK73GB1H103K	CHIP C 0.010UF K	
C532			CK73GB1H102K	CHIP C 1000PF K	
C533			CC73GCH1H101J	CHIP C 100PF J	
C534			CK73GB1H102K	CHIP C 1000PF K	
C601			CC73GCH1H101J	CHIP C 100PF J	
C602			CK73GB1H102K	CHIP C 1000PF K	
C603			CC73GCH1H101J	CHIP C 100PF J	
C606			CC73GCH1H101J	CHIP C 100PF J	
C607			CK73GB1C104K	CHIP C 0.10UF K	
CN501			E41-2743-05	PIN ASSY	
CN502			E40-6102-05	PIN ASSY	
CN601			E41-2751-05	PIN ASSY	
J601			E58-0522-05	MODULAR JACK	
-			J31-0543-05	COLLAR (LH-5-1.5)	
CP51-54			RK75GB1J471J	CHIP-COM 470 J 1/16W	

Ref. No.	Address	New parts	Parts No.	Description	Desti-nation
R502,503			RK73GB2A000J	CHIP R 0.0 J 1/10W	
R505			RK73GB2A683J	CHIP R 68K J 1/10W	
R506			RK73GB2A103J	CHIP R 10K J 1/10W	
R507			RK73GB2A682J	CHIP R 6.8K J 1/10W	
R508			RK73GB2A102J	CHIP R 1.0K J 1/10W	
R509			RK73GB2A103J	CHIP R 10K J 1/10W	
R510			RK73GB2A224J	CHIP R 220K J 1/10W	
R511,512			RK73GB2A103J	CHIP R 10K J 1/10W	
R513			RK73GB2A104J	CHIP R 100K J 1/10W	
R514			RK73GB2A154J	CHIP R 150K J 1/10W	
R516			RK73PB2H102J	CHIP R 1.0K J 1/2W	
R517			RK73PB2H821J	CHIP R 820 J 1/2W	
R518,519			RK73PB2H102J	CHIP R 1.0K J 1/2W	
R520-526			RK73PB2H821J	CHIP R 820 J 1/2W	
R529-540			RK73GB2A102J	CHIP R 1.0K J 1/10W	
R541-544			RK73GB2A103J	CHIP R 10K J 1/10W	
R545			RK73GH2A472D	CHIP R 4.7K D 1/10W	
R546			RK73GH2A153D	CHIP R 15K D 1/10W	
R547			RK73GB2A103J	CHIP R 10K J 1/10W	
R550			RK73GB2A472J	CHIP R 4.7K J 1/10W	
R601			RK73GB2A681J	CHIP R 680 J 1/10W	
R604,605			RK73GB2A102J	CHIP R 1.0K J 1/10W	
R606			RK73GB2A473J	CHIP R 47K J 1/10W	
VR501			R32-0689-05	SEMI FIXED VARIABLE RESISTOR (10K)	
VR601			R31-0630-05	VARIABLE RESISTOR (10K)	
S501-506			S70-0502-05	TACT SWITCH	
S507		*	S68-0430-05	PUSH SWITCH	
D501,502			HSM88AS-E	DIODE	
D506,507			LA-501DD	LED	
D508-514			DA204U	DIODE	
D601,602			DA204U	DIODE	
D603			MINISMDC020F	VARISTOR	
IC501			NJM4558E-ZB	ANALOGUE IC	
IC502-505			BU4094BCFV	MOS-IC	
IC506,507			TA78L05FF	MOS-IC	
IC508			TC7W53FU-F	HYBRID IC	
Q501			2SC4116(Y)F	TRANSISTOR	
Q502			2SA1586(Y,GR)F	TRANSISTOR	
Q503,504			UPA672T-A	FET	
Q506			RT1P141M-T111	TRANSISTOR	
Q507			UPA672T-A	FET	
Q508-511			RT1P141M-T111	TRANSISTOR	
Q512-514			UPA672T-A	FET	
Q516-519			UPA672T-A	FET	
Q521-524			UPA672T-A	FET	
Q525			2SK1824-A	FET	
TX-RX UNIT (X57-7950-XX) -10: K2 -11: K					
C100			CC73HCH1H050B	CHIP C 5.0PF B	
C101			CC73HCH1H150G	CHIP C 15PF G	K
C101			CC73HCH1H560J	CHIP C 56PF J	K2
C102			CC73HCH1H010B	CHIP C 1.0PF B	K
C102			CC73HCH1H060B	CHIP C 6.0PF B	K2
C103			CC73HCH1H120G	CHIP C 12PF G	K
C103			CC73HCH1H150G	CHIP C 15PF G	K2
C104			CK73HB1H471K	CHIP C 470PF K	
C105			CC73HCH1H050B	CHIP C 5.0PF B	K
C105			CC73HCH1H090B	CHIP C 9.0PF B	K2
C106			CK73HB1H471K	CHIP C 470PF K	

If a part reference number is listed in a shaded box, that part does not come with the PCB.

PARTS LIST

TX-RX UNIT (X57-7950-XX)

Ref. No.	Address	New parts	Parts No.	Description			Destination
C107			CC73HCH1H090B	CHIP C	9.0PF	B	K
C107,108			CC73HCH1H120G	CHIP C	12PF	G	K2
C108			CC73HCH1H080B	CHIP C	8.0PF	B	K
C109			CK73HB1H471K	CHIP C	470PF	K	
C110			CS77CA1V2R2M	CHIP TNTL	2.2UF	35WV	
C111			CC73HCH1H050B	CHIP C	5.0PF	B	K
C111			CC73HCH1H090B	CHIP C	9.0PF	B	K2
C112			CC73HCH1H100B	CHIP C	10PF	B	K
C112			CC73HCH1H180G	CHIP C	18PF	G	K2
C113			CC73HCH1H080B	CHIP C	8.0PF	B	K
C113			CC73HCH1H100B	CHIP C	10PF	B	K2
C114			CK73HB1H471K	CHIP C	470PF	K	
C115			CC73HCH1H050B	CHIP C	5.0PF	B	K
C115			CC73HCH1H090B	CHIP C	9.0PF	B	K2
C116			CK73HB1H471K	CHIP C	470PF	K	
C117			CC73HCH1H020B	CHIP C	2.0PF	B	K
C117			CC73HCH1H050B	CHIP C	5.0PF	B	K2
C118			CC73HCH1H120G	CHIP C	12PF	G	
C119			CK73HB1E104K	CHIP C	0.10UF	K	
C120			CK73HB1H471K	CHIP C	470PF	K	
C121			CC73HCH1H030B	CHIP C	3.0PF	B	K
C121			CC73HCH1H060B	CHIP C	6.0PF	B	K2
C122			CK73HB1H471K	CHIP C	470PF	K	K2
C122,123			CK73HB1H471K	CHIP C	470PF	K	K
C123			CK73HB1E104K	CHIP C	0.10UF	K	K2
C124			CC73HCH1H080B	CHIP C	8.0PF	B	
C125			CK73HB1H471K	CHIP C	470PF	K	
C126			CK73HB1E104K	CHIP C	0.10UF	K	
C127			CK73HB1H471K	CHIP C	470PF	K	
C129			CC73HCH1H080B	CHIP C	8.0PF	B	
C130			CC73HCH1H100B	CHIP C	10PF	B	
C131			CK73HB1E104K	CHIP C	0.10UF	K	
C134			CK73HB1H471K	CHIP C	470PF	K	
C135			CC73HCH1H030B	CHIP C	3.0PF	B	K
C135			CC73HCH1H050B	CHIP C	5.0PF	B	K2
C136			CC73HCH1H100B	CHIP C	10PF	B	K
C136			CC73HCH1H120G	CHIP C	12PF	G	K2
C137			CK73HB1H471K	CHIP C	470PF	K	
C138			CC73HCH1H070B	CHIP C	7.0PF	B	K
C138			CC73HCH1H090B	CHIP C	9.0PF	B	K2
C139			CK73HB1H471K	CHIP C	470PF	K	
C140			CC73HCH1H100B	CHIP C	10PF	B	K
C140			CC73HCH1H180G	CHIP C	18PF	G	K2
C141			CC73HCH1H080B	CHIP C	8.0PF	B	K
C141			CC73HCH1H100B	CHIP C	10PF	B	K2
C142			CK73HB1H471K	CHIP C	470PF	K	
C143			CC73HCH1H070B	CHIP C	7.0PF	B	K
C143			CC73HCH1H090B	CHIP C	9.0PF	B	K2
C144			CC73HCH1H100C	CHIP C	10PF	C	K2
C144			CC73HCH1H120G	CHIP C	12PF	G	K
C145			CC73HCH1H080B	CHIP C	8.0PF	B	K
C145			CC73HCH1H120G	CHIP C	12PF	G	K2
C146			CK73HB1H471K	CHIP C	470PF	K	
C147			CC73HCH1H070B	CHIP C	7.0PF	B	K
C147			CC73HCH1H090B	CHIP C	9.0PF	B	K2
C148			CK73HB1H471K	CHIP C	470PF	K	
C149			CC73HCH1H040B	CHIP C	4.0PF	B	
C150			CC73HCH1H090B	CHIP C	9.0PF	B	K
C150			CC73HCH1H150G	CHIP C	15PF	G	K2
C151			CC73HCH1H060B	CHIP C	6.0PF	B	K

Ref. No.	Address	New parts	Parts No.	Description			Destination
C151,152			CC73HCH1H050B	CHIP C	5.0PF	B	K2
C152			CC73HCH1H050B	CHIP C	5.0PF	B	K
C154			CC73HCH1H050B	CHIP C	5.0PF	B	
C155			CC73HCH1H010B	CHIP C	1.0PF	B	
C156			CC73HCH1H050B	CHIP C	5.0PF	B	
C157			CC73HCH1H560J	CHIP C	56PF	J	
C158			CC73HCH1H050B	CHIP C	5.0PF	B	K
C158			CC73HCH1H080B	CHIP C	8.0PF	B	K2
C159			CC73HCH1H060B	CHIP C	6.0PF	B	
C160			CK73HB1H471K	CHIP C	470PF	K	
C161			CC73HCH1H150G	CHIP C	15PF	G	K
C161			CK73HB1H561K	CHIP C	560PF	K	K2
C162			CC73HCH1H3R5B	CHIP C	3.5PF	B	K
C162,163			CC73HCH1H050B	CHIP C	5.0PF	B	K2
C163,164			CC73HCH1H030B	CHIP C	3.0PF	B	K
C164			CC73HCH1H060B	CHIP C	6.0PF	B	K2
C165			CC73HCH1H3R5B	CHIP C	3.5PF	B	K
C165,166			CC73HCH1H050B	CHIP C	5.0PF	B	K2
C166-169			CC73HCH1H050B	CHIP C	5.0PF	B	K
C167-169			CC73HCH1H060B	CHIP C	6.0PF	B	K2
C170			CC73HCH1H220G	CHIP C	22PF	G	K
C170			CC73HCH1H560J	CHIP C	56PF	J	K2
C171			CC73HCH1H040B	CHIP C	4.0PF	B	K
C171,172			CC73HCH1H060B	CHIP C	6.0PF	B	K2
C172			CC73HCH1H070B	CHIP C	7.0PF	B	K
C173			CC73HCH1H030B	CHIP C	3.0PF	B	K2
C173			CC73HCH1H3R5B	CHIP C	3.5PF	B	K
C174			CC73HCH1H040B	CHIP C	4.0PF	B	K2
C174,175			CC73HCH1H1R5B	CHIP C	1.5PF	B	K
C175			CC73HCH1H050B	CHIP C	5.0PF	B	K2
C176			CK73GB1H471K	CHIP C	470PF	K	
C200,201			CS77CA1V2R2M	CHIP TNTL	2.2UF	35WV	
C202			CC73HCH1H100D	CHIP C	10PF	D	
C203			CK73HB1H471K	CHIP C	470PF	K	
C204			CC73HCH1H101J	CHIP C	100PF	J	
C205			CK73HB1E104K	CHIP C	0.10UF	K	
C206			CC73HCH1H470J	CHIP C	47PF	J	
C207,208			CS77BA1D100M	CHIP TNTL	10UF	20WV	
C209			CK73HB1H471K	CHIP C	470PF	K	
C210			CE32CL1V100M	CHIP EL	10UF	35WV	
C211			CK73HB1H471K	CHIP C	470PF	K	
C212			CK73HB1H103K	CHIP C	0.010UF	K	
C213			CC73HCH1H080B	CHIP C	8.0PF	B	K
C213			CC73HCH1H100B	CHIP C	10PF	B	K2
C214			CC73HCH1H030B	CHIP C	3.0PF	B	K
C214			CC73HCH1H050B	CHIP C	5.0PF	B	K2
C216			CC73HCH1H030B	CHIP C	3.0PF	B	K
C216			CC73HCH1H050B	CHIP C	5.0PF	B	K2
C219			CC73HCH1H100D	CHIP C	10PF	D	
C220-223			CK73HB1H103K	CHIP C	0.010UF	K	
C224			CK73HB1H471K	CHIP C	470PF	K	
C225			CC73HCH1H100D	CHIP C	10PF	D	
C226			CC73HCH1H680J	CHIP C	68PF	J	
C227			CK73HB1E104K	CHIP C	0.10UF	K	
C228			CC73HCH1H101J	CHIP C	100PF	J	
C229			CK73HB1H471K	CHIP C	470PF	K	
C230			CC73HCH1H680J	CHIP C	68PF	J	
C231			CK73HB1H471K	CHIP C	470PF	K	
C232			CC73HCH1H020B	CHIP C	2.0PF	B	K
C233,234			CC73HCH1H330J	CHIP C	33PF	J	K

PARTS LIST

TX-RX UNIT (X57-7950-XX)

Ref. No.	Address	New parts	Parts No.	Description			Desti-nation
C233,234			CC73HCH1H470J	CHIP C	47PF	J	K2
C235,236			CK73HB1H471K	CHIP C	470PF	K	
C237			CC73HCH1H080B	CHIP C	8.0PF	B	K2
C237			CC73HCH1H100B	CHIP C	10PF	B	K
C239			CC73HCH1H070B	CHIP C	7.0PF	B	K
C240			CK73HB1H471K	CHIP C	470PF	K	K2
C241			CC73HCH1H080B	CHIP C	8.0PF	B	K2
C241			CC73HCH1H120J	CHIP C	12PF	J	K
C242			CC73HCH1H020B	CHIP C	2.0PF	B	K2
C243			CC73HCH1H120J	CHIP C	12PF	J	
C244			CC73HCH1H010B	CHIP C	1.0PF	B	K2
C245			CC73HCH1H060D	CHIP C	6.0PF	D	
C246			CK73HB1H103K	CHIP C	0.010UF	K	
C247			CK73HB1H471K	CHIP C	470PF	K	K2
C247,248			CK73HB1H471K	CHIP C	470PF	K	K
C249			CC73HCH1H101J	CHIP C	100PF	J	K
C300			CC73HCH1H270J	CHIP C	27PF	J	
C301			CK73HB1H471K	CHIP C	470PF	K	
C302-305			CK73HB1H103K	CHIP C	0.010UF	K	
C306			CC73HCH1H020B	CHIP C	2.0PF	B	
C318			CC73HCH1H270G	CHIP C	27PF	G	
C322			CK73HB1H471K	CHIP C	470PF	K	
C323			CE32CL1E4R7M	CHIP EL	4.7UF	25WV	
C325			CK73HB1E104K	CHIP C	0.10UF	K	
C326			CC73HCH1H220G	CHIP C	22PF	G	K
C326			CC73HCH1H330G	CHIP C	33PF	G	K2
C328			CC73HCH1H010B	CHIP C	1.0PF	B	K
C328			CC73HCH1H020B	CHIP C	2.0PF	B	K2
C329			CK73HB1H103K	CHIP C	0.010UF	K	
C331			CK73HB1H471K	CHIP C	470PF	K	
C332			CC73HCH1H150J	CHIP C	15PF	J	
C333			CC73HCH1H090B	CHIP C	9.0PF	B	K
C333			CC73HCH1H120J	CHIP C	12PF	J	K2
C334			CK73HB1H103K	CHIP C	0.010UF	K	
C335			CC73HCH1H820J	CHIP C	82PF	J	
C336			CC73HCH1H270J	CHIP C	27PF	J	
C337,338			CK73HB1H103K	CHIP C	0.010UF	K	
C339			CC73HCH1H471J	CHIP C	470PF	J	
C341			CK73HB1H103K	CHIP C	0.010UF	K	
C342			CC73HCH1H180J	CHIP C	18PF	J	
C343,344			CK73HB1H103K	CHIP C	0.010UF	K	
C345			CK73HB1H471K	CHIP C	470PF	K	
C346			CC73HCH1H180J	CHIP C	18PF	J	K2
C346			CC73HCH1H220J	CHIP C	22PF	J	K
C347			CC73HCH1H150G	CHIP C	15PF	G	
C349			CK73HB1H103K	CHIP C	0.010UF	K	
C350			CK73HB1E104K	CHIP C	0.10UF	K	
C352			CC73HCH1H080B	CHIP C	8.0PF	B	K
C352			CC73HCH1H100D	CHIP C	10PF	D	K2
C353			CC73HCH1H180J	CHIP C	18PF	J	K2
C353,354			CC73HCH1H070B	CHIP C	7.0PF	B	K
C354			CC73HCH1H090B	CHIP C	9.0PF	B	K2
C355			CC73HCH1H060B	CHIP C	6.0PF	B	K
C356			CC73HCH1H100D	CHIP C	10PF	D	
C358			CC73HCH1H100D	CHIP C	10PF	D	K2
C358			CC73HCH1H120G	CHIP C	12PF	G	K
C400-403			CK73HB1E104K	CHIP C	0.10UF	K	
C404			CC73HCH1H100D	CHIP C	10PF	D	
C405,406			CK73HB1E104K	CHIP C	0.10UF	K	
C407			CK73HB1H471K	CHIP C	470PF	K	

Ref. No.	Address	New parts	Parts No.	Description			Desti-nation
C408			CK73HB1E104K	CHIP C	0.10UF	K	
C410			CK73HB1H471K	CHIP C	470PF	K	
C411			CK73GB1E105K	CHIP C	1.0UF	K	
C412			CK73HB1H471K	CHIP C	470PF	K	
C413			CK73GB1E105K	CHIP C	1.0UF	K	
C414			CK73HB1H471K	CHIP C	470PF	K	
C415			CK73HB1E104K	CHIP C	0.10UF	K	
C416			CK73HB1H103K	CHIP C	0.010UF	K	
C417			CK73HB1E104K	CHIP C	0.10UF	K	
C418			CK73HB1H102K	CHIP C	1000PF	K	
C419			CK73HB1H471K	CHIP C	470PF	K	
C421			CK73HB1H102K	CHIP C	1000PF	K	
C422			CK73HB1E104K	CHIP C	0.10UF	K	
C423			CK73HB1H103K	CHIP C	0.010UF	K	
C424-430			CK73HB1E104K	CHIP C	0.10UF	K	
C437-440			CK73HB1E104K	CHIP C	0.10UF	K	
C500-503			CK73HB1E104K	CHIP C	0.10UF	K	
C504			CK73HB1H471K	CHIP C	470PF	K	
C505-507			CK73HB1E104K	CHIP C	0.10UF	K	
C508			CK73HB1H103K	CHIP C	0.010UF	K	
C509-512			CK73HB1E104K	CHIP C	0.10UF	K	
C514			CK73HB1H103K	CHIP C	0.010UF	K	
C515			CK73HB1E104K	CHIP C	0.10UF	K	
C517			CK73HB1H103K	CHIP C	0.010UF	K	
C518			CK73HB1E104K	CHIP C	0.10UF	K	
C519			CK73HB1H103K	CHIP C	0.010UF	K	
C520			CK73HB1E104K	CHIP C	0.10UF	K	
C521			CC73HCH1H180J	CHIP C	18PF	J	
C522			CC73HCH1H101J	CHIP C	100PF	J	
C523			CC73HCH1H331J	CHIP C	330PF	J	
C524			CC73HCH1H180J	CHIP C	18PF	J	
C525			CC73HCH1H470J	CHIP C	47PF	J	
C526			CC73HCH1H471J	CHIP C	470PF	J	
C528			CC73HCH1H121J	CHIP C	120PF	J	
C529			CC73HCH1H221J	CHIP C	220PF	J	
C530-533			CK73HB1E104K	CHIP C	0.10UF	K	
C534			CC73HCH1H050C	CHIP C	5.0PF	C	
C535			CK73HB1H103K	CHIP C	0.010UF	K	
C536,537			CK73HB1E104K	CHIP C	0.10UF	K	
C538			CK73HB1H103K	CHIP C	0.010UF	K	
C539			CC73HCH1H820J	CHIP C	82PF	J	
C540			CK73HB1H103K	CHIP C	0.010UF	K	
C541			CK73HB1E104K	CHIP C	0.10UF	K	
C542			CK73FB1A106K	CHIP C	10UF	K	
C543-545			CK73HB1E104K	CHIP C	0.10UF	K	
C546			CC73HCH1H390J	CHIP C	39PF	J	
C547,548			CC73HCH1H100D	CHIP C	10PF	D	
C549			CK73HB1E104K	CHIP C	0.10UF	K	
C550			CK73HB1H103K	CHIP C	0.010UF	K	
C551			CC73HCH1H100D	CHIP C	10PF	D	K
C600,601			CK73FB1A106K	CHIP C	10UF	K	
C602-604			CK73HB1E104K	CHIP C	0.10UF	K	
C605			CK73HB1H103K	CHIP C	0.010UF	K	
C606,607			CK73FB1A106K	CHIP C	10UF	K	
C608			CK73HB1H103K	CHIP C	0.010UF	K	
C610-613			CK73HB1H103K	CHIP C	0.010UF	K	
C614			CS77BA1D100M	CHIP TNTL	10UF	20WV	
C615			CC73HCH1H181J	CHIP C	180PF	J	
C616			CC73HCH1H470J	CHIP C	47PF	J	
C618			CS77CB21A470M	CHIP TNTL	47UF	10WV	

PARTS LIST

TX-RX UNIT (X57-7950-XX)

Ref. No.	Address	New parts	Parts No.	Description			Desti-nation
C619			CC73HCH1H331J	CHIP C	330PF	J	
C620			CC73HCH1H180J	CHIP C	18PF	J	
C621			CS77CB21A470M	CHIP TNTL	47UF	10WV	
C622			CC73HCH1H221J	CHIP C	220PF	J	
C623			CK73HB1H103K	CHIP C	0.010UF	K	
C624			CK73HB1E104K	CHIP C	0.10UF	K	
C625			CK73HB1H103K	CHIP C	0.010UF	K	
C626			CS77BA1D100M	CHIP TNTL	10UF	20WV	
C627			CK73HB1H103K	CHIP C	0.010UF	K	
C628			CC73HCH1H100D	CHIP C	10PF	D	
C629,630			CK73HB1H103K	CHIP C	0.010UF	K	
C631			CC73HCH1H100D	CHIP C	10PF	D	
C632			CK73HB1E104K	CHIP C	0.10UF	K	
C633,634			CK73HB1H103K	CHIP C	0.010UF	K	
C635			CC73HCH1H100D	CHIP C	10PF	D	
C636,637			CK73HB1H103K	CHIP C	0.010UF	K	
C638			CK73GB1E105K	CHIP C	1.0UF	K	
C639			CK73HB1H103K	CHIP C	0.010UF	K	
C641			CK73HB1H103K	CHIP C	0.010UF	K	
C642			CK73HB1E104K	CHIP C	0.10UF	K	
C643			CS77BA1D100M	CHIP TNTL	10UF	20WV	
C644			CC73HCH1H100D	CHIP C	10PF	D	
C645			CK73GB1E105K	CHIP C	1.0UF	K	
C647,648			CS77CA1V2R2M	CHIP TNTL	2.2UF	35WV	
C649			CK73HB1E104K	CHIP C	0.10UF	K	
C650			CK73HB1H471K	CHIP C	470PF	K	
C651			CC73HCH1H101J	CHIP C	100PF	J	
C652			CC73HCH1H100D	CHIP C	10PF	D	
C653,654			CS77BA1D100M	CHIP TNTL	10UF	20WV	
C655			CK73HB1H471K	CHIP C	470PF	K	
C656			CE32CL1V100M	CHIP EL	10UF	35WV	
C657			CC73HCH1H330J	CHIP C	33PF	J	
C658			CK73HB1H471K	CHIP C	470PF	K	
C660			CC73HCH1H100D	CHIP C	10PF	D	
C661			CK73HB1E104K	CHIP C	0.10UF	K	
C662			CC73HCH1H050C	CHIP C	5.0PF	C	K
C662			CC73HCH1H070B	CHIP C	7.0PF	B	K2
C663			CK73HB1H103K	CHIP C	0.010UF	K	
C664			CC73HCH1H3R5B	CHIP C	3.5PF	B	K2
C665			CC73HCH1H030B	CHIP C	3.0PF	B	K
C668			CC73HCH1H030B	CHIP C	3.0PF	B	K
C671			CC73HCH1H010B	CHIP C	1.0PF	B	K
C671			CC73HCH1H040B	CHIP C	4.0PF	B	K2
C672,673			CK73HB1H471K	CHIP C	470PF	K	
C674			CC73HCH1H030B	CHIP C	3.0PF	B	K
C674			CC73HCH1H040B	CHIP C	4.0PF	B	K2
C677			CC73HCH1H060B	CHIP C	6.0PF	B	K2
C677			CC73HCH1H100D	CHIP C	10PF	D	K
C679,680			CK73HB1H471K	CHIP C	470PF	K	
C683-688			CK73HB1H471K	CHIP C	470PF	K	
C690,691			CK73HB1H471K	CHIP C	470PF	K	K
C700			CK73HB1H103K	CHIP C	0.010UF	K	
C701			C92-0905-05	OS-CON	47UF	35WV	
C702			CK73GB1E105K	CHIP C	1.0UF	K	
C703			CK73HB1H471K	CHIP C	470PF	K	
C704			CK73GB1E105K	CHIP C	1.0UF	K	
C705			CK73HB1H471K	CHIP C	470PF	K	
C706			C92-0765-05	CHIP TNTL	4.7UF	16WV	
C707			CE32CL1V100M	CHIP EL	10UF	35WV	
C708			CK73HB1E104K	CHIP C	0.10UF	K	

Ref. No.	Address	New parts	Parts No.	Description			Desti-nation
C709			CK73HB1H103K	CHIP C	0.010UF	K	
C710,711			CK73HB1H471K	CHIP C	470PF	K	
C712			CK73GB1E105K	CHIP C	1.0UF	K	
C713			CK73HB1H471K	CHIP C	470PF	K	
C714			CC73HCH1H181J	CHIP C	180PF	J	
C715			CK73HB1H471K	CHIP C	470PF	K	
C716			CE32CL1V100M	CHIP EL	10UF	35WV	
C717			CC73HCH1H220J	CHIP C	22PF	J	
C718			CK73HB1H471K	CHIP C	470PF	K	
C719			CK73GB1E105K	CHIP C	1.0UF	K	
C720			CK73HB1E104K	CHIP C	0.10UF	K	
C721			CK73GB1E105K	CHIP C	1.0UF	K	
C722,723			CK73HB1E104K	CHIP C	0.10UF	K	
C724,725			CK73GB1E105K	CHIP C	1.0UF	K	
C726			CK73HB1H103K	CHIP C	0.010UF	K	
C727			CK73GB1E105K	CHIP C	1.0UF	K	
C728,729			CK73HB1H471K	CHIP C	470PF	K	
C814			CC73HCH1H101J	CHIP C	100PF	J	
C815			CK73HB1H103K	CHIP C	0.010UF	K	
C817,818			CK73HB1E104K	CHIP C	0.10UF	K	
C819			CK73HB1H103K	CHIP C	0.010UF	K	
C820			CK73HB1H471K	CHIP C	470PF	K	
C821			CK73HB1E104K	CHIP C	0.10UF	K	
C822			CC73HCH1H100D	CHIP C	10PF	D	
C823			CK73HB1E104K	CHIP C	0.10UF	K	
C825			C93-0912-05	CHIP C	100UF	M	
C826			CK73GB1E105K	CHIP C	1.0UF	K	
C827			CK73HB1H471K	CHIP C	470PF	K	
C828			CK73HB1E104K	CHIP C	0.10UF	K	
C831			CK73HB1E104K	CHIP C	0.10UF	K	
C832			CC73HCH1H050B	CHIP C	5.0PF	B	
C842-844			CK73HB1H471K	CHIP C	470PF	K	K
C845,846			CC73HCH1H101J	CHIP C	100PF	J	K
CN101			E04-0154-05	PIN SOCKET			
CN102			E23-1330-05	TERMINAL			K2
CN102,103			E23-1330-05	TERMINAL			K
CN106			E23-1330-05	TERMINAL			
CN500			E04-0154-05	PIN SOCKET			
CN610			E04-0154-05	PIN SOCKET			
CN700,701			E41-2672-05	PIN ASSY			
CN800			E40-6656-05	PIN ASSY			
CN801			E41-2743-05	PIN ASSY			
CN802			E04-0193-05	PIN SOCKET			
CN807-809			E23-1278-05	TERMINAL			
CN811-813			E23-1278-05	TERMINAL			
-			F10-2409-04	SHIELDING CASE			
F700			F53-0328-15	FUSE (5A)			
CF400,401			L72-1028-05	CERAMIC FILTER			
CF402			L72-1027-05	CERAMIC FILTER			
CF403			L72-1041-05	CERAMIC FILTER			
L100,101			L34-4565-05	AIR-CORE COIL			
L103,104			L34-4565-05	AIR-CORE COIL			
L106			L92-0467-05	CHIP FERRITE			
L107			L41-1078-14	SMALL FIXED INDUCTOR (10NH)			K
L107			L41-1278-14	SMALL FIXED INDUCTOR (12NH)			K2
L109			L41-5668-14	SMALL FIXED INDUCTOR (5.6NH)			K
L109			L41-6868-14	SMALL FIXED INDUCTOR (6.8NH)			K2
L111,112			L34-4565-05	AIR-CORE COIL			

PARTS LIST

TX-RX UNIT (X57-7950-XX)

Ref. No.	Address	New parts	Parts No.	Description	Desti-nation
L114-118			L34-4565-05	AIR-CORE COIL	
L119			L34-4616-05	AIR-CORE COIL	
L120,121			L41-1578-14	SMALL FIXED INDUCTOR (15NH)	K
L120,121			L41-1878-14	SMALL FIXED INDUCTOR (18NH)	K2
L200,201			L41-2278-14	SMALL FIXED INDUCTOR (22NH)	K
L200,201			L41-2778-14	SMALL FIXED INDUCTOR (27NH)	K2
L203			L41-5685-14	SMALL FIXED INDUCTOR (560NH)	
L205			L41-4778-14	SMALL FIXED INDUCTOR (47NH)	
L206			L41-1085-33	SMALL FIXED INDUCTOR (0.1UH)	K2
L206			L41-1585-33	SMALL FIXED INDUCTOR (0.15UH)	K
L207			L41-2278-14	SMALL FIXED INDUCTOR (22NH)	
L208-210			L41-1275-33	SMALL FIXED INDUCTOR (0.012UH)	K
L209			L41-1575-33	SMALL FIXED INDUCTOR (0.015UH)	K2
L210			L41-1875-33	SMALL FIXED INDUCTOR (0.018UH)	K2
L211			L41-3378-14	SMALL FIXED INDUCTOR (33NH)	
L212			L92-0467-05	CHIP FERRITE	
L214			L92-0467-05	CHIP FERRITE	
L215			L92-0163-05	BEADS CORE	
L300			L92-0467-05	CHIP FERRITE	
L301			L40-3381-86	SMALL FIXED INDUCTOR (0.33UH)	
L302			L41-5685-47	SMALL FIXED INDUCTOR (560NH)	
L303			L41-3385-47	SMALL FIXED INDUCTOR (330NH)	K2
L303			L41-3985-47	SMALL FIXED INDUCTOR (390NH)	K
L304,305			L41-1578-14	SMALL FIXED INDUCTOR (15NH)	
L308			L41-1878-14	SMALL FIXED INDUCTOR (18NH)	K
L308			L41-2278-14	SMALL FIXED INDUCTOR (22NH)	K2
L309			L41-6878-14	SMALL FIXED INDUCTOR (68NH)	
L310			L41-2785-47	SMALL FIXED INDUCTOR (270NH)	K
L310			L41-3385-47	SMALL FIXED INDUCTOR (330NH)	K2
L312			L41-1078-14	SMALL FIXED INDUCTOR (10NH)	
L313			L40-8275-92	SMALL FIXED INDUCTOR (82NH)	
L315			L41-1078-14	SMALL FIXED INDUCTOR (10NH)	
L316			L40-2785-92	SMALL FIXED INDUCTOR (270NH)	
L317			L41-1095-33	SMALL FIXED INDUCTOR (1.0UH)	
L320			L40-1885-92	SMALL FIXED INDUCTOR (180NH)	
L500			L41-3395-33	SMALL FIXED INDUCTOR (3.3UH)	
L501			L41-4795-33	SMALL FIXED INDUCTOR (4.7UH)	
L502			L41-6885-33	SMALL FIXED INDUCTOR (0.68UH)	
L503			L41-5685-33	SMALL FIXED INDUCTOR (0.56UH)	
L504			L41-2295-33	SMALL FIXED INDUCTOR (2.2UH)	
L505,506			L41-1295-33	SMALL FIXED INDUCTOR (1.2UH)	
L507,508			L41-3305-33	SMALL FIXED INDUCTOR (33UH)	
L600,601			L41-1005-33	SMALL FIXED INDUCTOR (10UH)	
L602			L92-0467-05	CHIP FERRITE	
L603			L41-1005-33	SMALL FIXED INDUCTOR (10UH)	
L604			L41-3385-39	SMALL FIXED INDUCTOR (0.33UH)	
L605			L41-3985-39	SMALL FIXED INDUCTOR (0.39UH)	
L606			L41-1095-39	SMALL FIXED INDUCTOR (1.0UH)	
L607,608			L41-1878-14	SMALL FIXED INDUCTOR (18NH)	K2
L607,608			L41-2278-14	SMALL FIXED INDUCTOR (22NH)	K
L609			L41-1278-14	SMALL FIXED INDUCTOR (12NH)	K2
L609			L41-1078-14	SMALL FIXED INDUCTOR (10NH)	K
L610			L41-2278-14	SMALL FIXED INDUCTOR (22NH)	K
L610			L41-2778-14	SMALL FIXED INDUCTOR (27NH)	K2
L611			L41-1578-14	SMALL FIXED INDUCTOR (15NH)	K2
L611			L41-2278-14	SMALL FIXED INDUCTOR (22NH)	K
L613,614			L92-0639-05	CHIP FERRITE	
L615-617			L92-0467-05	CHIP FERRITE	
L619			L92-0163-05	BEADS CORE	K
L700			L33-1462-05	SMALL FIXED INDUCTOR (68UH)	

Ref. No.	Address	New parts	Parts No.	Description	Desti-nation
L701,702			L41-1005-33	SMALL FIXED INDUCTOR (10UH)	
L800,801			L92-0467-05	CHIP FERRITE	
L803			L92-0162-05	BEADS CORE	
L804			L41-1285-14	SMALL FIXED INDUCTOR (120NH)	
L805,806			L92-0467-05	CHIP FERRITE	
X500			L77-3056-05	TCXO (19.2MHZ)	
X600			L77-1960-15	VCXO (16.8MHZ)	
XF300			L71-0649-05	MCF (58.05MHZ)	
R100			RK73GB2A102J	CHIP R 1.0K J 1/10W	
R101			RK73HB1J000J	CHIP R 0.0 J 1/16W	
R105,106			RK73HB1J104J	CHIP R 100K J 1/16W	
R107			RK73HB1J103J	CHIP R 10K J 1/16W	
R109,110			RK73HB1J104J	CHIP R 100K J 1/16W	
R111			RK73HB1J101J	CHIP R 100 J 1/16W	
R112			RK73HB1J104J	CHIP R 100K J 1/16W	
R113			RK73HB1J103J	CHIP R 10K J 1/16W	
R114			RK73HB1J101J	CHIP R 100 J 1/16W	
R115			RK73FB2B121J	CHIP R 120 J 1/8W	
R116			RK73HB1J103J	CHIP R 10K J 1/16W	
R117			RK73HB1J100J	CHIP R 10 J 1/16W	
R118			RK73HB1J274J	CHIP R 270K J 1/16W	
R119			RK73HB1J393J	CHIP R 39K J 1/16W	
R120			RK73HB1J122J	CHIP R 1.2K J 1/16W	
R121			RK73HB1J102J	CHIP R 1.0K J 1/16W	
R122			RK73HB1J221J	CHIP R 220 J 1/16W	
R125			RK73HB1J000J	CHIP R 0.0 J 1/16W	
R126			RK73HB1J103J	CHIP R 10K J 1/16W	
R128,129			RK73HB1J000J	CHIP R 0.0 J 1/16W	
R130			RK73HB1J274J	CHIP R 270K J 1/16W	
R131			RK73HB1J393J	CHIP R 39K J 1/16W	
R132-136			RK73HB1J104J	CHIP R 100K J 1/16W	
R137			RK73HB1J4R7J	CHIP R 4.7 J 1/16W	
R138,139			RK73HB1J000J	CHIP R 0.0 J 1/16W	
R140			RK73HB1J220J	CHIP R 22 J 1/16W	
R200			RK73HB1J223J	CHIP R 22K J 1/16W	
R201,202			RK73HB1J103J	CHIP R 10K J 1/16W	
R203			RK73HB1J000J	CHIP R 0.0 J 1/16W	
R204			RK73HB1J224J	CHIP R 220K J 1/16W	
R205			RK73HB1J102J	CHIP R 1.0K J 1/16W	
R206			RK73HB1J334J	CHIP R 330K J 1/16W	
R207			RK73HB1J393J	CHIP R 39K J 1/16W	
R208			RK73HB1J000J	CHIP R 0.0 J 1/16W	
R209			RK73HB1J102J	CHIP R 1.0K J 1/16W	
R210			RK73HB1J124J	CHIP R 120K J 1/16W	
R211			RK73HB1J333J	CHIP R 33K J 1/16W	
R212			RK73HB1J394J	CHIP R 390K J 1/16W	
R213			RK73HB1J106J	CHIP R 10M J 1/16W	
R214			RK73HB1J000J	CHIP R 0.0 J 1/16W	
R215,216			RK73HB1J102J	CHIP R 1.0K J 1/16W	
R220,221			RK73HB1J101J	CHIP R 100 J 1/16W	
R223			RK73HB1J181J	CHIP R 180 J 1/16W	K
R223			RK73HB1J331J	CHIP R 330 J 1/16W	K2
R224			RK73HB1J220J	CHIP R 22 J 1/16W	
R225			RK73HB1J334J	CHIP R 330K J 1/16W	
R227			RK73HB1J220J	CHIP R 22 J 1/16W	
R228,229			RK73HB1J000J	CHIP R 0.0 J 1/16W	
R230			RK73HB1J271J	CHIP R 270 J 1/16W	
R231			RK73HB1J180J	CHIP R 18 J 1/16W	
R232			RK73HB1J271J	CHIP R 270 J 1/16W	

PARTS LIST

TX-RX UNIT (X57-7950-XX)

Ref. No.	Address	New parts	Parts No.	Description				Destination
R233			RK73HB1J472J	CHIP R	4.7K	J	1/16W	
R234			RK73HB1J182J	CHIP R	1.8K	J	1/16W	
R235			RK73HB1J220J	CHIP R	22	J	1/16W	
R236			RK73HB1J102J	CHIP R	1.0K	J	1/16W	
R237			RK73HB1J680J	CHIP R	68	J	1/16W	
R238,239			RK73HB1J000J	CHIP R	0.0	J	1/16W	
R243			RK73HB1J271J	CHIP R	270	J	1/16W	
R244			RK73HB1J180J	CHIP R	18	J	1/16W	
R245			RK73HB1J271J	CHIP R	270	J	1/16W	
R246			RK73HB1J221J	CHIP R	220	J	1/16W	K2
R246			RK73HB1J331J	CHIP R	330	J	1/16W	K
R247			RK73HB1J103J	CHIP R	10K	J	1/16W	
R300			RK73HB1J331J	CHIP R	330	J	1/16W	
R301			RK73HB1J101J	CHIP R	100	J	1/16W	
R302			RK73HB1J473J	CHIP R	47K	J	1/16W	
R303			RK73HB1J220J	CHIP R	22	J	1/16W	
R304			RK73HB1J104J	CHIP R	100K	J	1/16W	
R305			RK73HB1J123J	CHIP R	12K	J	1/16W	
R306			RK73HB1J103J	CHIP R	10K	J	1/16W	
R310			RK73HB1J122J	CHIP R	1.2K	J	1/16W	
R311			RK73GB2A100J	CHIP R	10	J	1/10W	K2
R311			RK73GB2A220J	CHIP R	22	J	1/10W	K
R312			RK73HB1J100J	CHIP R	10	J	1/16W	K2
R312			RK73HB1J220J	CHIP R	22	J	1/16W	K
R313			RK73HB1J272J	CHIP R	2.7K	J	1/16W	
R314			RK73HB1J103J	CHIP R	10K	J	1/16W	
R315			RK73GB2A101J	CHIP R	100	J	1/10W	
R316			RK73GB2A100J	CHIP R	10	J	1/10W	
R318			RK73HB1J220J	CHIP R	22	J	1/16W	
R320			RK73HB1J100J	CHIP R	10	J	1/16W	
R323			RK73HB1J151J	CHIP R	150	J	1/16W	K2
R323			RK73HB1J181J	CHIP R	180	J	1/16W	K
R332			RK73HB1J470J	CHIP R	47	J	1/16W	
R400			RK73HB1J224J	CHIP R	220K	J	1/16W	
R401			RK73HB1J220J	CHIP R	22	J	1/16W	
R402			RK73HB1J101J	CHIP R	100	J	1/16W	
R403			RK73HB1J682J	CHIP R	6.8K	J	1/16W	
R404			RK73HB1J000J	CHIP R	0.0	J	1/16W	
R405			RK73HB1J103J	CHIP R	10K	J	1/16W	
R406			RK73HB1J220J	CHIP R	22	J	1/16W	
R407			RK73HB1J474J	CHIP R	470K	J	1/16W	
R408			RK73HB1J103J	CHIP R	10K	J	1/16W	
R409-411			RK73HB1J473J	CHIP R	47K	J	1/16W	
R412			RK73HB1J101J	CHIP R	100	J	1/16W	
R413			RK73HB1J000J	CHIP R	0.0	J	1/16W	
R415			RK73HB1J000J	CHIP R	0.0	J	1/16W	
R416			RK73HB1J222J	CHIP R	2.2K	J	1/16W	
R417,418			RK73HB1J220J	CHIP R	22	J	1/16W	
R420			RK73HB1J470J	CHIP R	47	J	1/16W	
R421			RK73HB1J182J	CHIP R	1.8K	J	1/16W	
R422			RK73HB1J101J	CHIP R	100	J	1/16W	
R425			RK73HB1J183J	CHIP R	18K	J	1/16W	
R426			RK73HB1J822J	CHIP R	8.2K	J	1/16W	
R427,428			RK73HB1J473J	CHIP R	47K	J	1/16W	
R429			RK73HB1J220J	CHIP R	22	J	1/16W	
R431			RK73HB1J000J	CHIP R	0.0	J	1/16W	
R433-435			RK73HB1J000J	CHIP R	0.0	J	1/16W	
R436-438			RK73HB1J152J	CHIP R	1.5K	J	1/16W	
R442-444			RK73HB1J821J	CHIP R	820	J	1/16W	K
R442,443			RK73HB1J821J	CHIP R	820	J	1/16W	K2

Ref. No.	Address	New parts	Parts No.	Description				Destination
R444			RK73HB1J122J	CHIP R	1.2K	J	1/16W	K2
R447			RK73HB1J000J	CHIP R	0.0	J	1/16W	
R448,449			RK73HB1J334J	CHIP R	330K	J	1/16W	
R450			RK73HB1J563J	CHIP R	56K	J	1/16W	
R451			RK73HB1J104J	CHIP R	100K	J	1/16W	
R452			RK73HB1J224J	CHIP R	220K	J	1/16W	
R453			RK73HB1J220J	CHIP R	22	J	1/16W	
R500			RK73HB1J104J	CHIP R	100K	J	1/16W	
R501,502			RK73HH1J104D	CHIP R	100K	D	1/16W	
R503			RK73HB1J101J	CHIP R	100	J	1/16W	
R504			RK73HB1J220J	CHIP R	22	J	1/16W	
R505			RK73HB1J124J	CHIP R	120K	J	1/16W	
R506			RK73HB1J471J	CHIP R	470	J	1/16W	
R507			RK73HB1J220J	CHIP R	22	J	1/16W	
R509			RK73HB1J183J	CHIP R	18K	J	1/16W	
R510			RK73HB1J223J	CHIP R	22K	J	1/16W	
R511			RK73HB1J220J	CHIP R	22	J	1/16W	
R512			RK73HB1J223J	CHIP R	22K	J	1/16W	
R513			RK73HB1J471J	CHIP R	470	J	1/16W	
R514			RK73HB1J220J	CHIP R	22	J	1/16W	
R515			RK73HB1J272J	CHIP R	2.7K	J	1/16W	
R516			RK73HB1J000J	CHIP R	0.0	J	1/16W	
R518			RK73HB1J102J	CHIP R	1.0K	J	1/16W	
R519			RK73HB1J181J	CHIP R	180	J	1/16W	
R520			RK73HB1J394J	CHIP R	390K	J	1/16W	
R521			RK73HB1J154J	CHIP R	150K	J	1/16W	
R522			RK73HB1J333J	CHIP R	33K	J	1/16W	
R523			RK73HB1J000J	CHIP R	0.0	J	1/16W	K2
R523			RK73HB1J151J	CHIP R	150	J	1/16W	K
R524			RK73HB1J104J	CHIP R	100K	J	1/16W	
R525			RK73HB1J000J	CHIP R	0.0	J	1/16W	
R527			RK73HB1J104J	CHIP R	100K	J	1/16W	
R528			RK73HB1J224J	CHIP R	220K	J	1/16W	
R529			RK73HB1J104J	CHIP R	100K	J	1/16W	
R530			RK73HB1J471J	CHIP R	470	J	1/16W	
R531,532			RK73HB1J103J	CHIP R	10K	J	1/16W	
R533			RK73HB1J220J	CHIP R	22	J	1/16W	
R534			RK73HB1J682J	CHIP R	6.8K	J	1/16W	
R535			RK73HB1J104J	CHIP R	100K	J	1/16W	
R536			RK73HB1J272J	CHIP R	2.7K	J	1/16W	
R537			RK73HB1J102J	CHIP R	1.0K	J	1/16W	
R538			RK73HB1J221J	CHIP R	220	J	1/16W	
R539,540			RK73HB1J104J	CHIP R	100K	J	1/16W	
R541			RK73HB1J101J	CHIP R	100	J	1/16W	
R542			RK73HB1J104J	CHIP R	100K	J	1/16W	
R543			RK73HB1J221J	CHIP R	220	J	1/16W	
R544			RK73HB1J104J	CHIP R	100K	J	1/16W	
R545,546			RK73HB1J120J	CHIP R	12	J	1/16W	
R547-550			RK73HB1J182J	CHIP R	1.8K	J	1/16W	
R551			RK73HB1J101J	CHIP R	100	J	1/16W	
R552			RK73HB1J102J	CHIP R	1.0K	J	1/16W	
R602			RK73HB1J101J	CHIP R	100	J	1/16W	
R604			RK73HB1J104J	CHIP R	100K	J	1/16W	
R605			RK73HB1J000J	CHIP R	0.0	J	1/16W	
R606-608			RK73HB1J104J	CHIP R	100K	J	1/16W	
R609			RK73HB1J472J	CHIP R	4.7K	J	1/16W	
R610			RK73HB1J000J	CHIP R	0.0	J	1/16W	
R611			RK73HB1J101J	CHIP R	100	J	1/16W	
R612			RK73HB1J470J	CHIP R	47	J	1/16W	
R613			RK73HB1J000J	CHIP R	0.0	J	1/16W	

PARTS LIST

TX-RX UNIT (X57-7950-XX)

Ref. No.	Address	New parts	Parts No.	Description				Desti-nation
R614			RK73HB1J223J	CHIP R	22K	J	1/16W	
R615			RK73HB1J273J	CHIP R	27K	J	1/16W	
R616			RK73HB1J103J	CHIP R	10K	J	1/16W	
R617			RK73HB1J154J	CHIP R	150K	J	1/16W	
R618			RK73HB1J101J	CHIP R	100	J	1/16W	
R619			RK73HB1J221J	CHIP R	220	J	1/16W	
R620			RK73HB1J000J	CHIP R	0.0	J	1/16W	
R621			RK73HB1J220J	CHIP R	22	J	1/16W	
R622			RK73HB1J103J	CHIP R	10K	J	1/16W	
R623			RK73HB1J562J	CHIP R	5.6K	J	1/16W	
R624			RK73HB1J104J	CHIP R	100K	J	1/16W	
R625			RK73HB1J221J	CHIP R	220	J	1/16W	
R626			RK73HB1J472J	CHIP R	4.7K	J	1/16W	
R627			RK73HB1J220J	CHIP R	22	J	1/16W	
R628			RK73HB1J471J	CHIP R	470	J	1/16W	
R629,630			RK73HB1J104J	CHIP R	100K	J	1/16W	
R631			RK73HB1J822J	CHIP R	8.2K	J	1/16W	
R632			RK73HB1J182J	CHIP R	1.8K	J	1/16W	
R633			RK73HB1J220J	CHIP R	22	J	1/16W	
R634			RK73HB1J473J	CHIP R	47K	J	1/16W	
R635			RK73GB2A2R2J	CHIP R	2.2	J	1/10W	
R636			RK73HB1J104J	CHIP R	100K	J	1/16W	
R637			RK73HB1J473J	CHIP R	47K	J	1/16W	
R638			RK73HB1J220J	CHIP R	22	J	1/16W	
R639			RK73HB1J000J	CHIP R	0.0	J	1/16W	
R640			RK73HB1J102J	CHIP R	1.0K	J	1/16W	
R641			RK73HB1J000J	CHIP R	0.0	J	1/16W	
R642,643			RK73HB1J104J	CHIP R	100K	J	1/16W	
R644			RK73HB1J103J	CHIP R	10K	J	1/16W	
R645			RK73HB1J220J	CHIP R	22	J	1/16W	
R646			RK73HB1J000J	CHIP R	0.0	J	1/16W	
R647			RK73HB1J102J	CHIP R	1.0K	J	1/16W	
R648			RK73HB1J274J	CHIP R	270K	J	1/16W	K2
R648			RK73HB1J394J	CHIP R	390K	J	1/16W	K
R649			RK73HB1J000J	CHIP R	0.0	J	1/16W	
R650-652			RK73HB1J102J	CHIP R	1.0K	J	1/16W	
R653			RK73HB1J124J	CHIP R	120K	J	1/16W	
R654			RK73HB1J333J	CHIP R	33K	J	1/16W	
R655			RK73HB1J394J	CHIP R	390K	J	1/16W	
R656			RK73HB1J106J	CHIP R	10M	J	1/16W	
R657			RK73HB1J223J	CHIP R	22K	J	1/16W	
R658			RK73HB1J103J	CHIP R	10K	J	1/16W	
R659			RK73HB1J224J	CHIP R	220K	J	1/16W	
R660			RK73HB1J334J	CHIP R	330K	J	1/16W	
R661			RK73HB1J393J	CHIP R	39K	J	1/16W	
R663			RK73HB1J000J	CHIP R	0.0	J	1/16W	K2
R665			RK73HB1J000J	CHIP R	0.0	J	1/16W	
R666			RK73HB1J101J	CHIP R	100	J	1/16W	
R668			RK73HB1J472J	CHIP R	4.7K	J	1/16W	
R669			RK73HB1J182J	CHIP R	1.8K	J	1/16W	
R670			RK73HB1J181J	CHIP R	180	J	1/16W	
R671			RK73HB1J220J	CHIP R	22	J	1/16W	
R680			RK73HB1J821J	CHIP R	820	J	1/16W	
R681			RK73HB1J5R6J	CHIP R	5.6	J	1/16W	
R682			RK73HB1J821J	CHIP R	820	J	1/16W	
R683-685			RK73HB1J000J	CHIP R	0.0	J	1/16W	
R686,687			RK73HB1J472J	CHIP R	4.7K	J	1/16W	
R688			RK73HB1J330J	CHIP R	33	J	1/16W	K2
R688			RK73HB1J680J	CHIP R	68	J	1/16W	K
R689,690			RK73HB1J101J	CHIP R	100	J	1/16W	K

Ref. No.	Address	New parts	Parts No.	Description				Desti-nation
R689,690			RK73HB1J181J	CHIP R	180	J	1/16W	K2
R700			RK73HB1J330J	CHIP R	33	J	1/16W	
R701			RK73HB1J100J	CHIP R	10	J	1/16W	
R702			RK73HB1J473J	CHIP R	47K	J	1/16W	
R703			RK73HB1J000J	CHIP R	0.0	J	1/16W	
R704			RK73HB1J472J	CHIP R	4.7K	J	1/16W	
R705			RK73HB1J104J	CHIP R	100K	J	1/16W	
R706			RK73HB1J102J	CHIP R	1.0K	J	1/16W	
R707			RK73HB1J154J	CHIP R	150K	J	1/16W	
R708,709			RK73HB1J473J	CHIP R	47K	J	1/16W	
R710			RK73HB1J472J	CHIP R	4.7K	J	1/16W	
R711			RK73HB1J123J	CHIP R	12K	J	1/16W	
R712			RK73HB1J474J	CHIP R	470K	J	1/16W	
R713			RK73HH1J334D	CHIP R	330K	D	1/16W	
R714			RK73HH1J223D	CHIP R	22K	D	1/16W	
R715-717			RK73HB1J000J	CHIP R	0.0	J	1/16W	
R800-803			RK73HB1J000J	CHIP R	0.0	J	1/16W	
R806-815			RK73HB1J000J	CHIP R	0.0	J	1/16W	
R816,817			RK73HB1J101J	CHIP R	100	J	1/16W	
R818			RK73HB1J102J	CHIP R	1.0K	J	1/16W	
R819			RK73HB1J683J	CHIP R	68K	J	1/16W	
R820			RK73HB1J473J	CHIP R	47K	J	1/16W	
R821			RK73HB1J394J	CHIP R	390K	J	1/16W	
R822			RK73HB1J104J	CHIP R	100K	J	1/16W	
R824,825			RK73HB1J101J	CHIP R	100	J	1/16W	
R826			RK73HB1J562J	CHIP R	5.6K	J	1/16W	
R827			RK73HB1J103J	CHIP R	10K	J	1/16W	
R828			RK73HB1J224J	CHIP R	220K	J	1/16W	
R829			RK73HB1J220J	CHIP R	22	J	1/16W	
R830			RK73HB1J334J	CHIP R	330K	J	1/16W	
R831			RK73HB1J563J	CHIP R	56K	J	1/16W	
R832			RK73HB1J683J	CHIP R	68K	J	1/16W	
R833-835			RK73HB1J101J	CHIP R	100	J	1/16W	
R837			RK73HB1J000J	CHIP R	0.0	J	1/16W	
R838			RK73HB1J101J	CHIP R	100	J	1/16W	
R840,841			RK73HB1J101J	CHIP R	100	J	1/16W	
R842-849			RK73HB1J104J	CHIP R	100K	J	1/16W	
R850,851			RK73HB1J000J	CHIP R	0.0	J	1/16W	
R853			RK73HB1J000J	CHIP R	0.0	J	1/16W	
R855			RK73HB1J000J	CHIP R	0.0	J	1/16W	
R856			RK73GB2A220J	CHIP R	22	J	1/10W	
R857			RK73HB1J000J	CHIP R	0.0	J	1/16W	K
R860			RK73HB1J000J	CHIP R	0.0	J	1/16W	K
R860,861			RK73HB1J000J	CHIP R	0.0	J	1/16W	K2
D100,101			1SV283F	VARIABLE CAPACITANCE DIODE				
D103-108			1SV283F	VARIABLE CAPACITANCE DIODE				
D200			DA221	DIODE				
D500,501			UDZS3.0B	ZENER DIODE				
D503			HSM88AS-E	DIODE				
D504,505			JDP4P02AT	DIODE				
D600			DA221	DIODE				
D601			HVC131	DIODE				
D801			1SS388F	DIODE				
IC100,101			LMC7101BIM5	MOS-IC				
IC200			TC75W51FK(F)	MOS-IC				
IC201			LMC7101BIM5	MOS-IC				
IC203			TC7SH126FU-F	MOS-IC				
IC300			ADL5350ACPZ	MOS-IC				
IC400			AD8051ART	ANALOGUE IC				

PARTS LIST

TX-RX UNIT (X57-7950-XX)
RX VCO/PLL UNIT (X58-5090-XX)

Ref. No.	Address	New parts	Parts No.	Description	Desti-nation
IC401			TC75W51FK(F)	MOS-IC	
IC402			LMC7101BIM5	MOS-IC	
IC403			NJM2287V	MOS-IC	
IC404			MCP6021-E/OT	MOS-IC	
IC405-408			TC7W53FK(F)	MOS-IC	
IC409			TC75W51FK(F)	MOS-IC	
IC500			TC75W51FK(F)	MOS-IC	
IC501			TC75S59F-F	MOS-IC	
IC600,601			TC7WH126FU-F	MOS-IC	
IC602			ADF4001BRUZ	MOS-IC	
IC603			TC75S51FE(F)	MOS-IC	
IC604			LMC7101BIM5	MOS-IC	
IC605			TC75S51FE(F)	MOS-IC	
IC606,607			LMC7101BIM5	MOS-IC	
IC608			TC75W51FK(F)	MOS-IC	
IC700			NJM78M05DL1AZB	ANALOGUE IC	
IC701			XC9101D09AKR	ANALOGUE IC	
IC702			NJM78M08FA-ZB	ANALOGUE IC	
IC703			TK71733S	BI-POLAR IC	
IC704			TK11230CMCL-G	BI-POLAR IC	
IC800			LM73CIMKX-0	MOS-IC	
IC801			TC75S51FE(F)	MOS-IC	
IC802			M24C02-RMN6TP	ROM IC	
IC803			TC75W51FK(F)	MOS-IC	
IC804			M62364FP-F	MOS-IC	
IC805			MCP23S08TE/ML	MOS-IC	
IC806			TC7W53FK(F)	MOS-IC	
Q100			2SC5383-T111	TRANSISTOR	
Q101			2SC5337	TRANSISTOR	
Q200,201			2SC5383-T111	TRANSISTOR	
Q202,203			2SC5108(Y)F	TRANSISTOR	K
Q202,203			2SC5636	TRANSISTOR	K2
Q300			3SK294-FP	FET	
Q301			2SC5337	TRANSISTOR	
Q500			SSM6L05FU-F	FET	
Q501			2SC4617(R)	TRANSISTOR	
Q502			2SK3737-5	FET	
Q503			3SK294-FP	FET	
Q504			2SC4617(R)	TRANSISTOR	
Q505			SSM3K15TE(F)	FET	
Q506			SSM6L05FU-F	FET	
Q507			UPA672T-A	FET	
Q600			SSM3K15TE(F)	FET	
Q601			2SA1832(GR)F	TRANSISTOR	
Q602,603			2SC4617(R)	TRANSISTOR	
Q604,605			2SC5383-T111	TRANSISTOR	
Q606			2SC4725	TRANSISTOR	K
Q606			2SC5636	TRANSISTOR	K2
Q607			SSM3K15TE(F)	FET	
Q700			CPH3317	FET	
Q701			SSM3K15TE(F)	FET	
Q702			2SJ506-E(S)	FET	
Q703			RT1N141M-T111	TRANSISTOR	
Q704			SSM5H01TU-F	FET	
Q705			CPH3317	FET	
Q706			SSM3K15TE(F)	FET	
Q800			SSM3K15TE(F)	FET	

Ref. No.	Address	New parts	Parts No.	Description	Desti-nation
RX VCO/PLL UNIT (X58-5090-XX) -10: K2 -11: K					
C300			CS77CA1VR15M	CHIP TNTL 0.15UF 35WV	
C303			CS77BA1D100M	CHIP TNTL 10UF 20WV	
C304			CC73GCH1H100C	CHIP C 10PF C	
C306			CC73GCH1H100C	CHIP C 10PF C	
C307			CS77CA1V0R1M	CHIP TNTL 0.1UF 35WV	
C308-310			CK73HB1E103K	CHIP C 0.010UF K	
C311			CK73HB1H471K	CHIP C 470PF K	
C312			CC73GCH1H060B	CHIP C 6.0PF B	K
C312			CC73GCH1H070B	CHIP C 7.0PF B	K2
C313			CC73HCH1H101J	CHIP C 100PF J	
C314			CS77BA1E010M	CHIP TNTL 1.0UF 25WV	
C315,316			CC73HCH1H101J	CHIP C 100PF J	
C317			CK73HB1E103K	CHIP C 0.010UF K	
C318			CC73HCH1H101J	CHIP C 100PF J	
C320-322			CC73HCH1H101J	CHIP C 100PF J	
C324			CC73HCH1H101J	CHIP C 100PF J	
C325			CC73GCH1H100C	CHIP C 10PF C	K
C325			CC73GCH1H120G	CHIP C 12PF G	K2
C326			CC73HCH1H101J	CHIP C 100PF J	
C328			CC73GCH1H060B	CHIP C 6.0PF B	K
C328			CC73GCH1H070B	CHIP C 7.0PF B	K2
C329			CK73HB1H471K	CHIP C 470PF K	
C330			CC73HCH1H040B	CHIP C 4.0PF B	
C331			CK73HB1H471K	CHIP C 470PF K	
C332			CC73HCH1H100C	CHIP C 10PF C	
C333			CK73HB1E103K	CHIP C 0.010UF K	
C335			CC73HCH1H101J	CHIP C 100PF J	
C352,353			CC73HCH1H101J	CHIP C 100PF J	
C354,355			CC73GCH1H390J	CHIP C 39PF J	
C356,357			CK73HB1H471K	CHIP C 470PF K	
C358,359			CK73HB1E103K	CHIP C 0.010UF K	
C360,361			CK73HB1H471K	CHIP C 470PF K	
C362			CC73GCH1H150J	CHIP C 15PF J	K
C362			CC73GCH1H270J	CHIP C 27PF J	K2
C363			CC73GCH1H100C	CHIP C 10PF C	K
C363			CC73GCH1H180G	CHIP C 18PF G	K2
C364			CC73GCH1H060B	CHIP C 6.0PF B	K2
C364			CC73GCH1H030B	CHIP C 3.0PF B	K
C365			CC73GCH1H2R5B	CHIP C 2.5PF B	K
C365			CC73GCH1H040B	CHIP C 4.0PF B	K2
C366,367			CK73HB1H471K	CHIP C 470PF K	
C368			CC73GCH1H080B	CHIP C 8.0PF B	K
C368			CC73GCH1H100C	CHIP C 10PF C	K2
C369			CC73GCH1H070B	CHIP C 7.0PF B	K
C369			CC73GCH1H080B	CHIP C 8.0PF B	K2
C370			CC73GCH1H060B	CHIP C 6.0PF B	K2
C370			CC73GCH1H070B	CHIP C 7.0PF B	K
C371			CC73GCH1H050B	CHIP C 5.0PF B	K2
C371			CC73GCH1H060B	CHIP C 6.0PF B	K
C372			CC73GCH1H040B	CHIP C 4.0PF B	K2
C372			CC73GCH1H050B	CHIP C 5.0PF B	K
C373			CC73GCH1H030B	CHIP C 3.0PF B	K2
C373			CC73GCH1H040B	CHIP C 4.0PF B	K
C374,375			CC73GCH1H0R5B	CHIP C 0.5PF B	
C376,377			CK73HB1H471K	CHIP C 470PF K	
C378			CC73HCH1H030B	CHIP C 3.0PF B	K
C378			CC73HCH1H040C	CHIP C 4.0PF C	K2
C379			C93-0787-05	CHIP C 0.1UF J	

PARTS LIST

RX VCO/PLL UNIT (X58-5090-XX)
TX VCO/PLL UNIT (X58-5100-XX)

Ref. No.	Address	New parts	Parts No.	Description	Destination
C380			CC73GCH1H010B	CHIP C 1.0PF B	K
C380,381			CC73GCH1H020B	CHIP C 2.0PF B	K2
C382,383			CC73GCH1H040B	CHIP C 4.0PF B	K
C382,383			CC73GCH1H050B	CHIP C 5.0PF B	K2
CN303			E40-5816-05	PIN ASSY	
CN350			E40-6860-05	PIN ASSY	
CN351			E40-6098-05	PIN ASSY	
-			F10-2377-04	SHIELDING CASE	
L300			L92-0163-05	BEADS CORE	
L303			L41-1295-33	SMALL FIXED INDUCTOR (1.2UH)	
L305,306			L92-0163-05	BEADS CORE	
L309			L41-1878-14	SMALL FIXED INDUCTOR (18NH)	K
L309			L41-2278-14	SMALL FIXED INDUCTOR (22NH)	K2
L310			L92-0163-05	BEADS CORE	
L312,313			L92-0163-05	BEADS CORE	
L315			L41-3378-14	SMALL FIXED INDUCTOR (33NH)	
L316			L41-1878-14	SMALL FIXED INDUCTOR (18NH)	K
L316			L41-2278-14	SMALL FIXED INDUCTOR (22NH)	K2
L350-357			L41-1095-33	SMALL FIXED INDUCTOR (1.0UH)	
L358,359			L34-4607-15	AIR-CORE COIL	
L360,361			L41-1098-40	SMALL FIXED INDUCTOR (1000NH)	
L362,363			L41-1095-33	SMALL FIXED INDUCTOR (1.0UH)	
L364			L41-2275-33	SMALL FIXED INDUCTOR (0.022UH)	K2
L364			L41-3975-33	SMALL FIXED INDUCTOR (0.039UH)	K
L365,366			L92-0163-05	BEADS CORE	
R301			RK73GB2A391J	CHIP R 390 J 1/10W	
R302			RK73GB2A151J	CHIP R 150 J 1/10W	
R303			RK73GB2A000J	CHIP R 0.0 J 1/10W	
R304			RK73HB1J472J	CHIP R 4.7K J 1/16W	
R305			RK73GB2A000J	CHIP R 0.0 J 1/10W	
R306			RK73HB1J100J	CHIP R 10 J 1/16W	
R307			RK73HB1J470J	CHIP R 47 J 1/16W	
R308			RK73HB1J100J	CHIP R 10 J 1/16W	
R310			RK73HB1J102J	CHIP R 1.0K J 1/16W	
R311			RK73HB1J100J	CHIP R 10 J 1/16W	
R312			RK73HB1J330J	CHIP R 33 J 1/16W	
R313			RK73HB1J103J	CHIP R 10K J 1/16W	
R314			RK73HB1J472J	CHIP R 4.7K J 1/16W	
R315			RK73HB1J101J	CHIP R 100 J 1/16W	
R316			RK73HB1J100J	CHIP R 10 J 1/16W	
R317			RK73HB1J101J	CHIP R 100 J 1/16W	
R318			RK73HB1J121J	CHIP R 120 J 1/16W	K2
R319			RK73HB1J151J	CHIP R 150 J 1/16W	
R320			RK73HB1J223J	CHIP R 22K J 1/16W	
R321			RK73HB1J103J	CHIP R 10K J 1/16W	
R322			RK73HB1J8R2J	CHIP R 8.2 J 1/16W	
R323			RK73HB1J151J	CHIP R 150 J 1/16W	
R324			RK73HB1J8R2J	CHIP R 8.2 J 1/16W	
R325			RK73GB2A000J	CHIP R 0.0 J 1/10W	K2
R326,327			RK73GB2A000J	CHIP R 0.0 J 1/10W	K
R327			RK73GB2A000J	CHIP R 0.0 J 1/10W	K2
R331			RK73GB2A000J	CHIP R 0.0 J 1/10W	
R333			RK73HB1J000J	CHIP R 0.0 J 1/16W	
R350,351			RK73HB1J474J	CHIP R 470K J 1/16W	
R352			RK73HB1J000J	CHIP R 0.0 J 1/16W	
R354			RK73HB1J474J	CHIP R 470K J 1/16W	
R357,358			RK73HB1J000J	CHIP R 0.0 J 1/16W	
R361,362			RN73GH1J330D	CHIP R 33 D 1/16W	
R363,364			RN73GH1J271D	CHIP R 270 D 1/16W	
R365,366			RN73GH1J470D	CHIP R 47 D 1/16W	
R367			RK73HB1J330J	CHIP R 33 J 1/16W	
R368			RN73GH1J333D	CHIP R 33K D 1/16W	
R369			RN73GH1J103D	CHIP R 10K D 1/16W	
R370			RK73HB1J101J	CHIP R 100 J 1/16W	
R372			RK73HB1J000J	CHIP R 0.0 J 1/16W	
R374			RK73GB2A000J	CHIP R 0.0 J 1/10W	K2
R375			RK73GB2A000J	CHIP R 0.0 J 1/10W	K
R377			RK73GB2A000J	CHIP R 0.0 J 1/10W	
R379			RK73HB1J000J	CHIP R 0.0 J 1/16W	
D352,353			1SV325F	VARIABLE CAPACITANCE DIODE	
D355			1SV282-F	VARIABLE CAPACITANCE DIODE	
D357-361			1SV282-F	VARIABLE CAPACITANCE DIODE	
IC300			SKY72300-362	MOS-IC	
Q300			2SC5636	TRANSISTOR	
Q350,351			SSM6L05FU-F	FET	
Q352,353			MCH3914(8)-H	FET	
Q354			2SC5108(Y)F	TRANSISTOR	K
Q354			2SC5636	TRANSISTOR	K2

TX VCO/PLL UNIT (X58-5100-XX) -10: K2 -11: K

Ref. No.	Address	New parts	Parts No.	Description	Destination
C300			C92-0863-05	CHIP TNTL 0.047UF 35WV	K2
C300			CS77CA1VR15M	CHIP TNTL 0.15UF 35WV	K
C303			CS77BA1D100M	CHIP TNTL 10UF 20WV	
C304			CC73GCH1H100C	CHIP C 10PF C	
C306			CC73GCH1H100C	CHIP C 10PF C	
C307			CS77CA1VR15M	CHIP TNTL 0.15UF 35WV	
C308-310			CK73HB1E103K	CHIP C 0.010UF K	
C311			CK73HB1H471K	CHIP C 470PF K	
C312			CC73GCH1H050B	CHIP C 5.0PF B	K
C312			CC73GCH1H120G	CHIP C 12PF G	K2
C313			CC73HCH1H101J	CHIP C 100PF J	
C314			CS77BA1E010M	CHIP TNTL 1.0UF 25WV	
C315,316			CC73HCH1H101J	CHIP C 100PF J	
C317			CK73HB1E103K	CHIP C 0.010UF K	
C318			CC73HCH1H101J	CHIP C 100PF J	
C320-322			CC73HCH1H101J	CHIP C 100PF J	
C323			CC73GCH1H030B	CHIP C 3.0PF B	K2
C324			CC73HCH1H101J	CHIP C 100PF J	
C325			CC73GCH1H080B	CHIP C 8.0PF B	K
C326			CC73HCH1H101J	CHIP C 100PF J	
C328			CC73GCH1H050B	CHIP C 5.0PF B	K
C328			CC73GCH1H120G	CHIP C 12PF G	K2
C329			CK73HB1H471K	CHIP C 470PF K	
C330			CC73HCH1H040C	CHIP C 4.0PF C	K
C330			CC73HCH1H3R5B	CHIP C 3.5PF B	K2
C331			CK73HB1H471K	CHIP C 470PF K	K
C331,332			CK73HB1H471K	CHIP C 470PF K	K2
C332			CC73HCH1H100C	CHIP C 10PF C	K
C333			CK73HB1E103K	CHIP C 0.010UF K	
C335			CC73HCH1H101J	CHIP C 100PF J	
C350			C93-0787-05	CHIP C 0.1UF J	
C352,353			CC73HCH1H101J	CHIP C 100PF J	K
C354			CC73GCH1H470J	CHIP C 47PF J	K
C354,355			CK73GB1H471K	CHIP C 470PF K	K2
C355			CC73GCH1H270J	CHIP C 27PF J	K
C356,357			CK73HB1H471K	CHIP C 470PF K	
C358,359			CK73HB1E103K	CHIP C 0.010UF K	

PARTS LIST

TX VCO/PLL UNIT (X58-5100-XX)

Ref. No.	Address	New parts	Parts No.	Description	Destination
C360,361			CK73HB1H471K	CHIP C 470PF K	
C362			CC73GCH1H120J	CHIP C 12PF J	K
C362,363			CC73GCH1H120J	CHIP C 12PF J	K2
C363			CC73GCH1H090B	CHIP C 9.0PF B	K
C364			CC73GCH1H0R5B	CHIP C 0.5PF B	K2
C364			CC73GCH1H020B	CHIP C 2.0PF B	K
C365			CC73GCH1H010B	CHIP C 1.0PF B	K2
C365			CC73GCH1H1R5B	CHIP C 1.5PF B	K
C366,367			CK73HB1H471K	CHIP C 470PF K	
C368			CC73GCH1H040B	CHIP C 4.0PF B	K
C368			CC73GCH1H060B	CHIP C 6.0PF B	K2
C369			CC73GCH1H050B	CHIP C 5.0PF B	K
C369-373			CC73GCH1H050B	CHIP C 5.0PF B	K2
C370			CC73GCH1H070B	CHIP C 7.0PF B	K
C371			CC73GCH1H040B	CHIP C 4.0PF B	K
C372			CC73GCH1H060B	CHIP C 6.0PF B	K
C373			CC73GCH1H030B	CHIP C 3.0PF B	K
C374,375			CC73GCH1H0R5B	CHIP C 0.5PF B	
C376,377			CK73HB1H471K	CHIP C 470PF K	
C378			CC73HCH1H040C	CHIP C 4.0PF C	
C379			C93-0787-05	CHIP C 0.1UF J	
C382			CC73GCH1H030B	CHIP C 3.0PF B	K
C382			CC73GCH1H050B	CHIP C 5.0PF B	K2
C383			CC73GCH1H030B	CHIP C 3.0PF B	K2
C383			CC73GCH1H050B	CHIP C 5.0PF B	K
CN303			E40-5816-05	PIN ASSY	
CN350			E40-6860-05	PIN ASSY	
CN351			E40-6098-05	PIN ASSY	
-			F10-2377-04	SHIELDING CASE	
L300			L92-0163-05	BEADS CORE	
L303			L41-1295-33	SMALL FIXED INDUCTOR (1.2UH)	
L305,306			L92-0163-05	BEADS CORE	
L307			L41-1078-14	SMALL FIXED INDUCTOR (10NH)	K2
L308,309			L41-1578-14	SMALL FIXED INDUCTOR (15NH)	K
L309			L41-4778-14	SMALL FIXED INDUCTOR (47NH)	K2
L310			L92-0163-05	BEADS CORE	
L312,313			L92-0163-05	BEADS CORE	
L314			L41-1078-14	SMALL FIXED INDUCTOR (10NH)	K2
L315			L41-2278-14	SMALL FIXED INDUCTOR (22NH)	K
L315			L41-3978-14	SMALL FIXED INDUCTOR (39NH)	K2
L350-357			L41-1095-33	SMALL FIXED INDUCTOR (1.0UH)	K2
L350,351			L41-1005-33	SMALL FIXED INDUCTOR (10UH)	K
L352-357			L41-1095-33	SMALL FIXED INDUCTOR (1.0UH)	K
L358			L34-4608-15	AIR-CORE COIL	K2
L358,359			L34-4607-15	AIR-CORE COIL	K
L359			L34-4607-15	AIR-CORE COIL	K2
L360,361			L41-1005-33	SMALL FIXED INDUCTOR (10UH)	K2
L362,363			L41-1095-33	SMALL FIXED INDUCTOR (1.0UH)	
L364			L41-1875-33	SMALL FIXED INDUCTOR (0.018UH)	
L365,366			L92-0163-05	BEADS CORE	
L367,368			L41-1098-40	SMALL FIXED INDUCTOR (1000NH)	K
R301			RK73GB2A391J	CHIP R 390 J 1/10W	
R302			RK73GB2A121J	CHIP R 120 J 1/10W	K
R302			RK73GB2A151J	CHIP R 150 J 1/10W	K2
R303			RK73GB2A000J	CHIP R 0.0 J 1/10W	
R305			RK73GB2A000J	CHIP R 0.0 J 1/10W	
R306			RK73HB1J100J	CHIP R 10 J 1/16W	
R307			RK73HB1J560J	CHIP R 56 J 1/16W	
R308			RK73HB1J100J	CHIP R 10 J 1/16W	
R310			RK73HB1J102J	CHIP R 1.0K J 1/16W	
R311			RK73HB1J100J	CHIP R 10 J 1/16W	
R312			RK73HB1J330J	CHIP R 33 J 1/16W	K
R312			RK73HB1J470J	CHIP R 47 J 1/16W	K2
R313			RK73HB1J473J	CHIP R 47K J 1/16W	
R315			RK73HB1J101J	CHIP R 100 J 1/16W	
R316			RK73HB1J100J	CHIP R 10 J 1/16W	
R317			RK73HB1J101J	CHIP R 100 J 1/16W	
R318			RK73HB1J121J	CHIP R 120 J 1/16W	K
R318			RK73HB1J222J	CHIP R 2.2K J 1/16W	K2
R319			RK73HB1J151J	CHIP R 150 J 1/16W	K
R319			RK73HB1J391J	CHIP R 390 J 1/16W	K2
R320			RK73HB1J103J	CHIP R 10K J 1/16W	K2
R320			RK73HB1J223J	CHIP R 22K J 1/16W	K
R321			RK73HB1J103J	CHIP R 10K J 1/16W	K
R321			RK73HB1J562J	CHIP R 5.6K J 1/16W	K2
R322			RK73HB1J220J	CHIP R 22 J 1/16W	
R323			RK73HB1J470J	CHIP R 47 J 1/16W	
R324			RK73HB1J220J	CHIP R 22 J 1/16W	
R325			RK73GB2A000J	CHIP R 0.0 J 1/10W	K2
R326,327			RK73GB2A000J	CHIP R 0.0 J 1/10W	K
R327			RK73GB2A000J	CHIP R 0.0 J 1/10W	K2
R331			RK73GB2A000J	CHIP R 0.0 J 1/10W	
R333			RK73HB1J000J	CHIP R 0.0 J 1/16W	
R350,351			RK73HB1J474J	CHIP R 470K J 1/16W	
R353			RK73HB1J000J	CHIP R 0.0 J 1/16W	
R354			RK73HB1J474J	CHIP R 470K J 1/16W	
R355			RK73HB1J103J	CHIP R 10K J 1/16W	
R356			RK73HB1J180J	CHIP R 18 J 1/16W	K2
R356			RK73HB1J270J	CHIP R 27 J 1/16W	K
R357,358			RK73HB1J000J	CHIP R 0.0 J 1/16W	
R361,362			RN73GH1J330D	CHIP R 33 D 1/16W	
R363,364			RN73GH1J271D	CHIP R 270 D 1/16W	
R365,366			RN73GH1J470D	CHIP R 47 D 1/16W	
R367			RK73HB1J330J	CHIP R 33 J 1/16W	
R368			RN73GH1J333D	CHIP R 33K D 1/16W	
R369			RN73GH1J103D	CHIP R 10K D 1/16W	
R370			RK73HB1J820J	CHIP R 82 J 1/16W	
R372			RK73HB1J000J	CHIP R 0.0 J 1/16W	
R373			RK73HB1J474J	CHIP R 470K J 1/16W	
R374			RK73GB2A000J	CHIP R 0.0 J 1/10W	K2
R375			RK73GB2A000J	CHIP R 0.0 J 1/10W	K
R377			RK73GB2A000J	CHIP R 0.0 J 1/10W	
R379			RK73HB1J000J	CHIP R 0.0 J 1/16W	
D352,353			1SV278F	VARIABLE CAPACITANCE DIODE	K2
D352,353			1SV325F	VARIABLE CAPACITANCE DIODE	K
D355			1SV278F	VARIABLE CAPACITANCE DIODE	K
D355			1SV282-F	VARIABLE CAPACITANCE DIODE	K2
D357			1SV282-F	VARIABLE CAPACITANCE DIODE	K2
D357-361			1SV278F	VARIABLE CAPACITANCE DIODE	K
D358-361			1SV278F	VARIABLE CAPACITANCE DIODE	K2
IC300			SKY72300-362	MOS-IC	
Q300			2SC5636	TRANSISTOR	
Q350,351			SSM6L05FU-F	FET	
Q352,353			MCH3914(8)-H	FET	
Q354			2SC5108(Y)F	TRANSISTOR	K
Q354			2SC5636	TRANSISTOR	K2

EXPLODED VIEW

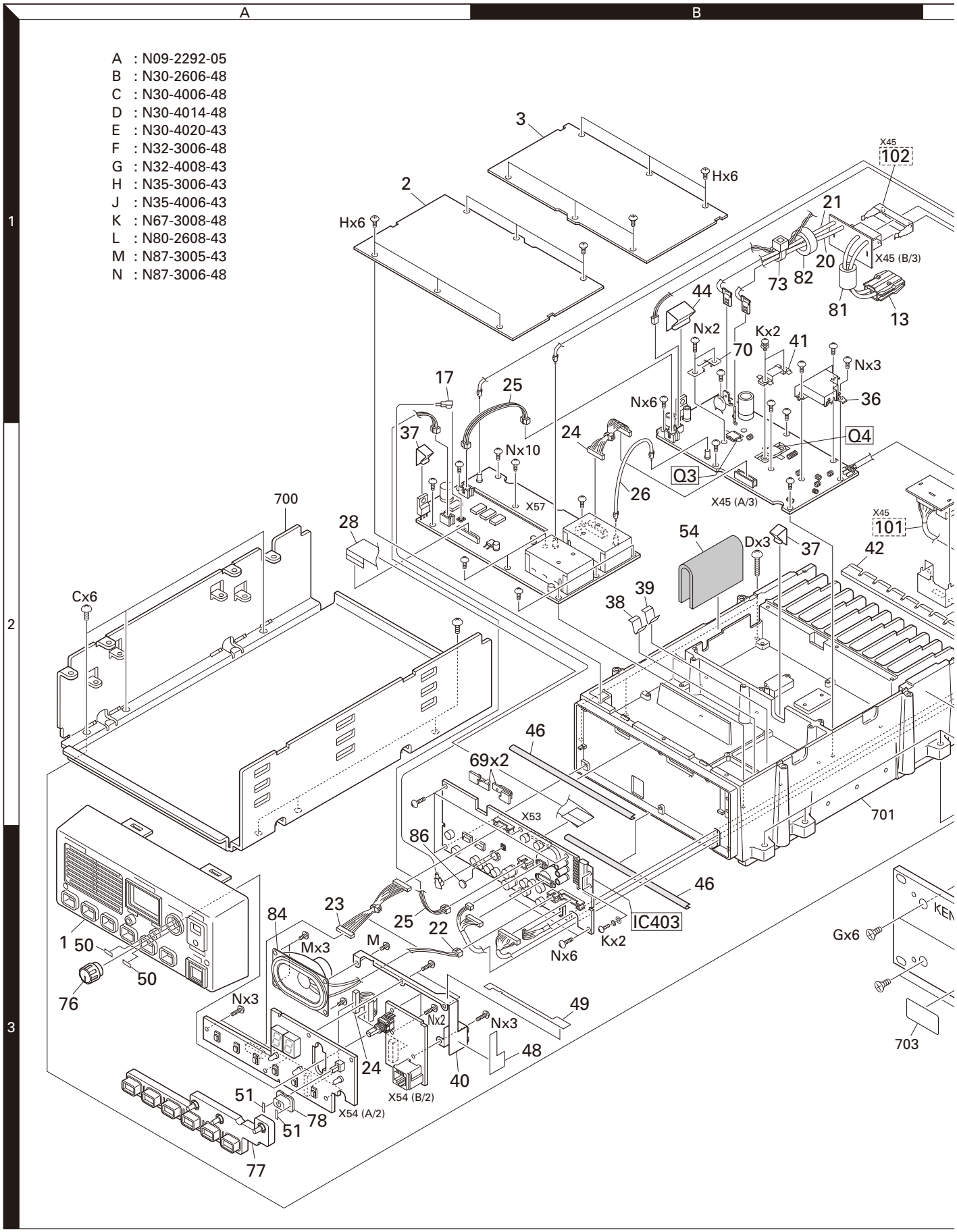

Parts with the exploded numbers larger than 700 are not supplied.
If a part reference number is listed in a box on the exploded view of the PCB, that part does not come with the PCB.
These parts must be ordered separately.

EXPLODED VIEW

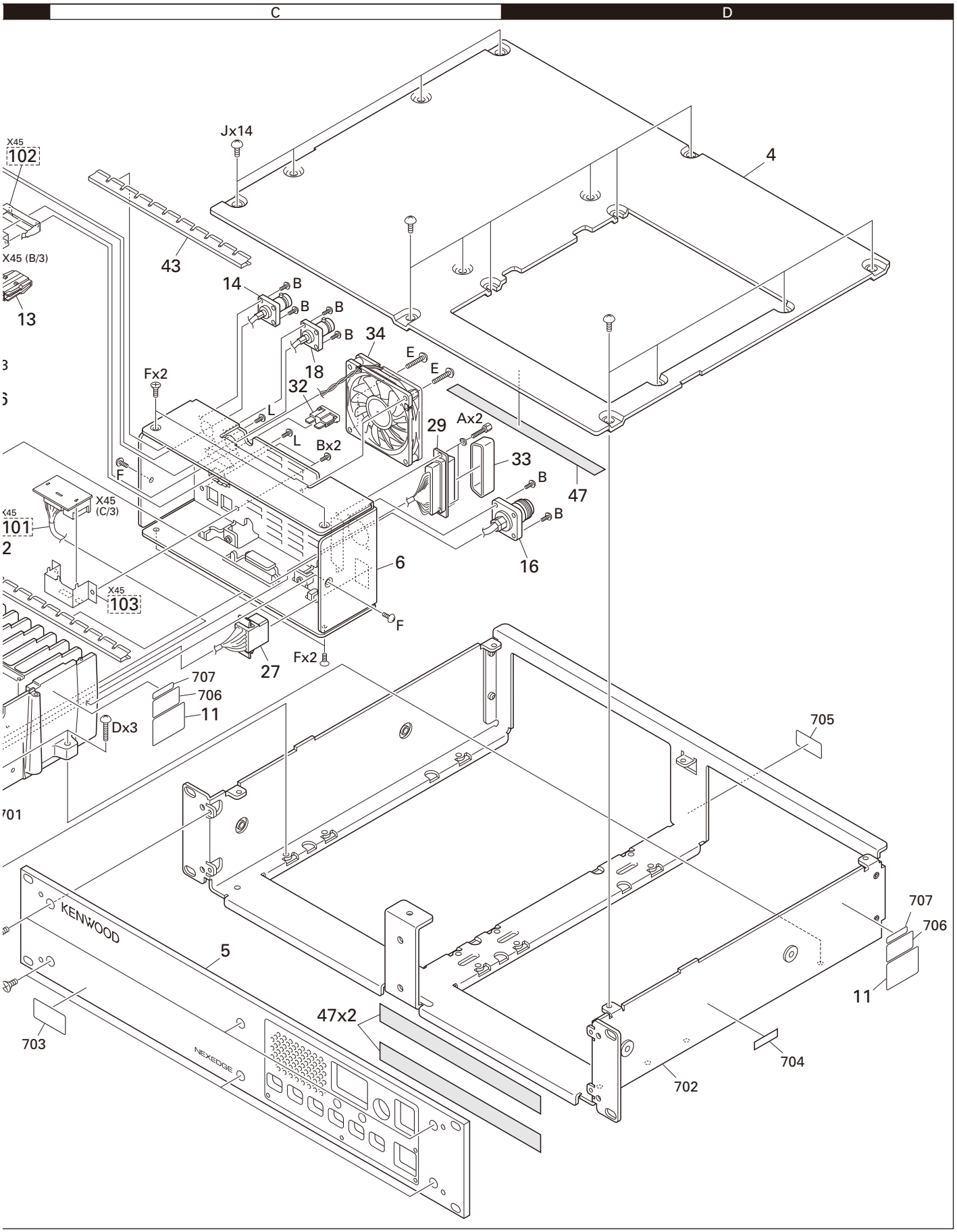

Parts with the exploded numbers larger than 700 are not supplied.
If a part reference number is listed in a box on the exploded view of the PCB, that part does not come with the PCB.
These parts must be ordered separately.

PACKING

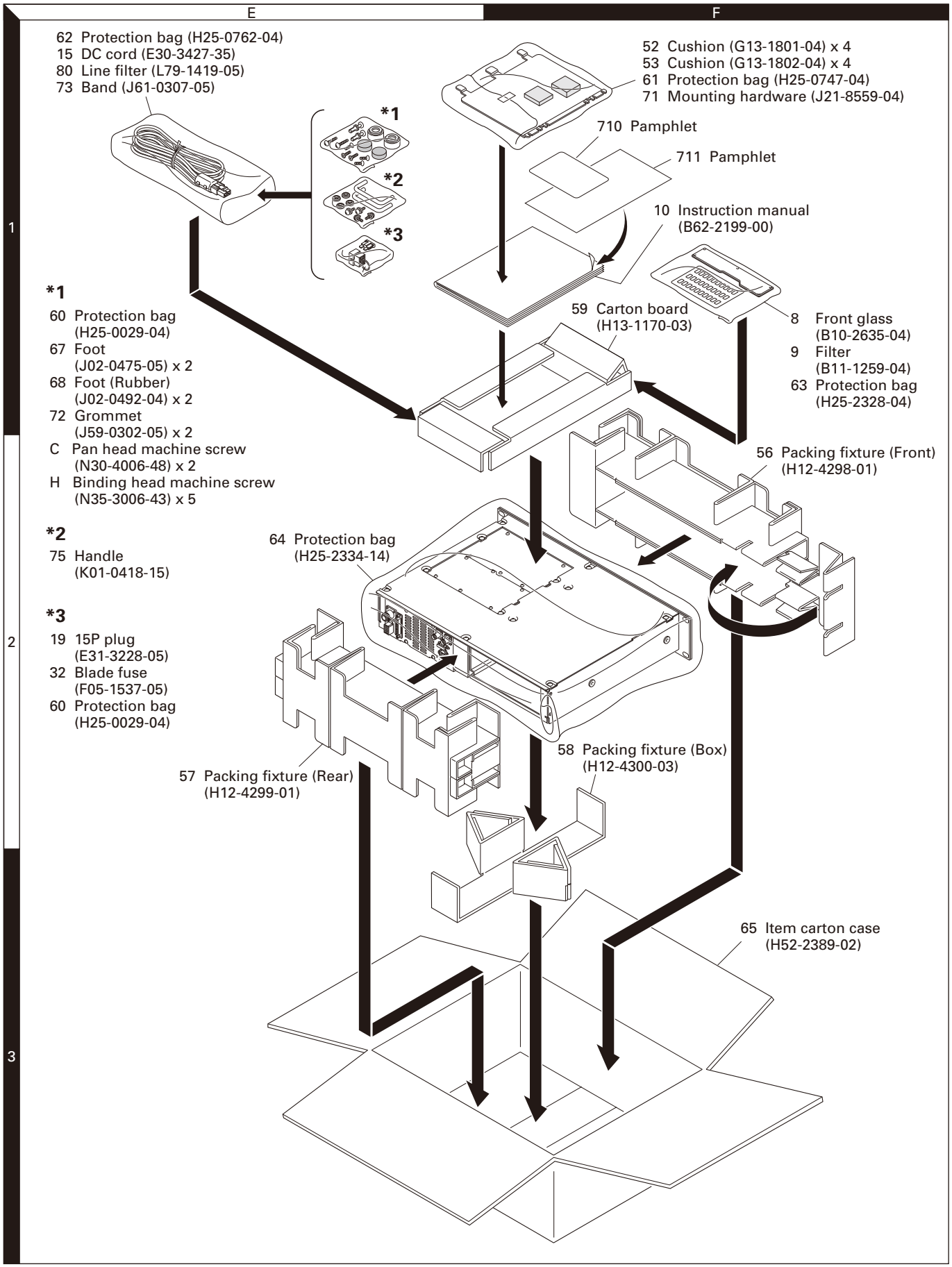

Parts with the exploded numbers larger than 700 are not supplied.

TROUBLE SHOOTING

1. Fault Diagnosis of the BGA (Ball Grid Array) IC

■ Overview

A flowchart for determining whether or not the transceiver can be powered on (**the Display does not function even if the power switch is turned on**) due to broken BGA parts.

■ BGA parts

ASIC (IC20), DSP (IC6), SRAM (IC9)

● Checking power supply voltage

Checking voltage

Points to be checked	Normal voltage
33M IC303 (5 pin)	3.3V
16M IC305 (5 pin)	1.6V
15M IC304 (5 pin)	1.5V
33A IC306 (5 pin)	3.3V
33BU Q303 (Collector Side)	3.3V

Power supply of each device is connected through the coil.
[ASIC]
33M: L20 and L308, 15M: L309
[DSP]
33M: L4 and L308, 16M: R324
[SRAM]
33BU: L5

When an abnormal value is confirmed. →

Checking for an abnormal point

33M has an abnormal voltage.
[ASIC]
Remove L20 to check the voltage of the 33M.
If the voltage becomes normal, the ASIC is broken.
[DSP]
Remove L4 to check the voltage of the 33M.
If the voltage becomes normal, the DSP is broken.

16M has an abnormal voltage.
[DSP]
Remove R324 to check the voltage of the 16M.
If the voltage becomes normal, the DSP is broken.

15M has an abnormal voltage.
[ASIC]
Remove L309 to check the voltage of the 15M.
If the voltage becomes normal, the ASIC is broken.

33A has an abnormal voltage.
[ASIC]
Remove L316 to check the voltage of the 33A.
If the voltage becomes normal, the ASIC is broken.

33BU has an abnormal voltage.
[SRAM]
Remove L5 to check the voltage of the 33BU.
If the voltage becomes normal, the SRAM is broken.

If the voltage is not corrected, there is a problem other than the BGA parts.

↓ When a normal value is confirmed.

● Checking the clock

Checking the frequency and the magnitude voltage.

Points to be checked	Normal Freq. and Magnitude	
18.432MHz R115 (ASIC side)	18.432MHz	3.3V
R52 (DSP side)	18.432MHz	3.3V
32.768kHz IC17 (1 pin)	32.768kHz	3.3V

When an abnormal value is confirmed. →

[18.432MHz]
Remove the R115 and R52. If it oscillates normally, the DSP and ASIC may be broken.
[32.768kHz]
Exchange IC17(RTC). If it oscillates normally, the ASIC may be broken.

↓ When a normal value is confirmed.

● Checking the Reset/Control signal

Checking the reset and control signal input to the ASIC

Points to be checked	Normal voltage
RESET R511	3.3V
/BINT IC307 (1 pin)	3.3V
/OVRB Q301 (Collector side)	3.3V

When an abnormal value is confirmed. →

The BGA parts are not broken.

↓ When a normal value is confirmed.

Checking the ASIC input switch signal
*Each signal is not masked by the setting of the FPU.
The POWER key is pressed and held.

Points to be checked	Confirmed voltage
/PSW R271 (ASIC Side)	0V

When an abnormal value is confirmed. →

The BGA parts are not broken.

↓ When a normal value is confirmed.

● Checking the output signal from the ASIC

Points to be checked	Normal voltage
/FRST IC3 (12 pin)	3.3V

When an abnormal value is confirmed. →

If the /FRST is always 0V, the ASIC is broken.

↓ When a normal value is confirmed.

TROUBLE SHOOTING

● Checking the signal output from the ASIC via software control

When a normal value is confirmed.

Points to be checked	Normal voltage
SBC R241	3.3V

When an abnormal value is confirmed. → Remove R241. If the ASIC side is 0V, the ASIC/ SRAM may be broken.

When a normal value is confirmed.

Points to be checked	Normal voltage
/DRST C38 (Signal Side)	3.3V

When an abnormal value is confirmed. → If the /DRST is 0V, the ASIC/SRAM are broken.

● Panel control (Control unit)

When a normal value is confirmed.

Points to be checked	Normal voltage
SB L317	"Power Supply Voltage" – 0.4V or more

When an abnormal value is confirmed. → If the SBC is 3.3V and SB L317 is "Normal voltage", the BGA parts are not broken.

● Panel control (Display unit)

When a normal value is confirmed.

Checking voltage

Points to be checked	Normal voltage
VDD IC506 (2 pin), IC507 (2 pin)	5.0V

When an abnormal value is confirmed. → The BGA parts are not broken. IC503~IC507 may be broken.

When a normal value is confirmed.

Points to be checked	Normal voltage
SOE CN502 (11 pin)	5.0V

When an abnormal value is confirmed. → Check the follows signal on "Control Unit" in turning on power.

Points to be checked	Normal pulse voltage
IC19 (2 pin, 3 pin)	3.3V→0V→3.3V

If the signal is abnormal or no signal, the BGA may be broken.

When a normal value is confirmed.

Check the clock/data/strobe signal when turning on the power.

Points to be checked	Normal pulse voltage
CLK CN502 (14 pin)	0V→5V→0V
DAT CN502 (15 pin)	0V→5V→0V
STB1 CN502 (13 pin)	0V→5V→0V

When an abnormal value is confirmed. → Check the follows signal on "Control Unit" in powering on.

Points to be checked	Normal pulse voltage
[CLK is abnormal value.]	
→ IC18 (6 pin)	0V→3.3V→0V
[DAT is abnormal value.]	
→ IC18 (8 pin)	0V→3.3V→0V
[STB1 is abnormal value.]	
→ IC26 (1,2 pin)	0V→3.3V→0V or 3.3V

If the signal is abnormal value or no signal, the BGA may be broken.

When a normal value is confirmed.

Checking voltage

Points to be checked	Normal voltage
POWLEDC IC502 (4 pin)	5V

When an abnormal value is confirmed. → If nothing or an abnormal character is displayed and the Power LED does not light even after replacing the Display Unit, the BGA may be broken.
The panel Logic IC receives the display data from the ASIC. The display signal becomes abnormal if communication is incorrect due to the trouble in the ASIC.

When a normal value is confirmed.

It is unlikely that the BGA parts are broken.

● When an error display appears on the LED segment indicator.

The display indicates "E 1 "	Appears when all Channel Data is blank. Please set the channel data.
The display indicates "E 2 "	Appears when the selected Channel is blank. (When a blank channel is selected with Remote Control, etc.) Please set the channel data.

TROUBLE SHOOTING

The display indicates “E 3 ”	Appears when TX PLL or RX PLL is Un-Lock. TX LED blinks at TX PLL Un-Lock. BUSY LED blinks at RX PLL Un-Lock. This display disappears when PLL is steady. However, the following cause might exist when not disappearing for a long time. • When there is no External reference input (At the setting that uses External reference.) →Please Input an “External reference” signal, or change the FPU setting. • Correct Data might not be set to the PLL IC. →Please reactivate the Repeater. • There may be a hardware fault.
The display indicates “E 4 ”	Appears when the Repeater started transmitting on a Channel to which a transmit frequency is not set. Please set the transmit frequency.
The display indicates “E 5 ”	Appears when the ESN is not written to the repeater. Please write the ESN.
The display indicates “E.6.”	An error occurs when the ASIC internal RAM reads or writes. The ASIC may be broken.
The display indicates “E 6.”	An error occurs when the DSP internal RAM reads or writes. The DSP may be broken.
The display indicates “E 6 ”	An error occurs when the SRAM (IC9) is read or written. The SRAM may be broken.
Priority level of display	• When Repeater starts E.6. → E6 → E6. → E5 → E1 • After Repeater starts E2 → E3, E4

2. If normal power is not obtained, please follow the steps below

1. Switch off the repeater.
   The impedance of the Final FET (Q4) and Drive FET (Q3) can be measured easily using a DVM (Digital Volt Meter) ohm mode.
   Normal condition – Gate: > 5kohm
   The above impedance values are rough estimations.
2. Switch on the repeater. Check the voltage at F1 output point.
   The voltage is around 13.6V during reception.
   The voltage will be 13.0V~ during transmission.
   If this point measures 0V, then F1 is damaged.
3. Remove C27.
4. Connect a 50ohm load to the ANT terminal.
   Transmit and check the current drain in High power mode.
   If the current drain is less than 1.0A, then the Final FET is damaged.
   If the current drain is less than 5.0A, short the Drive FET gate to ground, and check the current drain.
   If the current drain is not 0.1A less than the original value, then the Drive FET is damaged.
5. Check the input power level at the Drive FET gate location.
   Connect the wire to [RF] location. (A join of R17 and R18)
   Confirm that it is about 0.3W.
   If power found is considerably lower than 0.3W, check the circuit before the Drive FET.

TROUBLE SHOOTING

■ Replacing the Final FET (Q4)

1) The X45 (final) PCB must be shifted to the left after placing it into the chassis.
   Insert a board of just 1mm between the PCB and the case.
2) The FET (RD60HUF1-101) must be shifted to the right during mounting.

Max Power NG

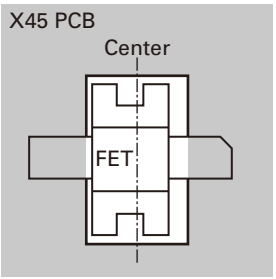

Max Power OK

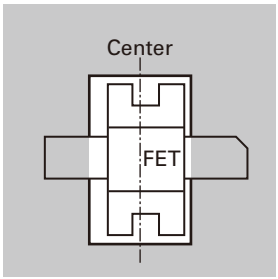

3) Apply solder to cover the entire FET terminal. (Both input and output terminals of the FET (Q3,Q4)).

Max Power NG

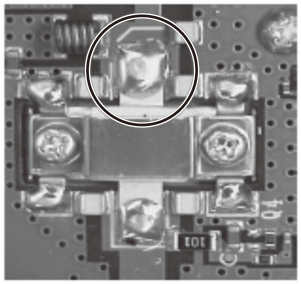

Max Power OK

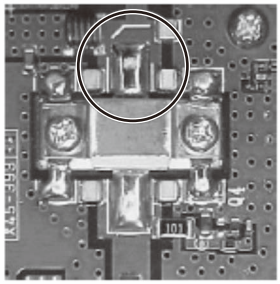

3. Replacing Control Unit

3-1. Control Unit Information

Original Control Unit	Control Unit (Service Unit)	Difference between Original Unit and Service Unit
X53-4490-10	X53-4490-11	Mounted chip at 0-11 location for Service Unit. 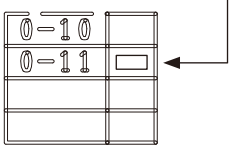

3-2. Supplied Accessories

Item (Including Part Number)	Quantity
Control Unit (X53-449)	1
Kenwood ESN Label	3
NXDN ESN Label	2
Addendum (B59-2621-XX)	1

3-3. Printed Circuit Board Data

The following data is written on the printed circuit board:

Data Type	Description
Firmware	NXR-710/810 Firmware
FPU Data (PC programming mode)	NXR-710 K type data.
Various Adjustment Data (PC test mode)	General adjustment values for the NXR-710.
Kenwood ESN	Model Name: NXR-710/810S Type: K The same number as the Kenwood ESN label is written.
NXDN ESN	The same number as the NXDN ESN label is written.

3-4. After Changing the PCB

1. After changing the printed circuit board, write the up-to-date Firmware following the instructions in the "RE-ALIGNMENT 4. Firmware Programming Mode".
2. Using the KPG-129D, select your desired item (Model Name and Frequency) from the Model > Product Information menu, then use Program > Write Data to the repeater to write the FPU data (PC Programming mode).
   When writing to the repeater, a Warning Message, corresponding to the item selected, appears. Click [OK] to continue writing the data.
3. Enter Program > Test mode, then adjust the various adjustment data (PC Test mode) as described in the "ADJUSTMENT".
4. For the X53-449, attach the new labels corresponding to the new printed circuit board. (Refer to the images on page 45 for label placement.)
5. If necessary, write the FPU data used by the customer with the KPG-129D.

Note:

- When a new printed circuit board is used, the Kenwood ESN changes, as does the Repeater Information display of the KPG-129D, but this does not have any effect on the operation of the transceiver.
- If changing to the original Kenwood ESN and NXDN ESN, please contact our service center.
- Re-installing other parts from original unit to Service unit is not required after changing to Service unit.

TROUBLE SHOOTING

3-5. ESN Label Layout

The following labels are provided in the service unit package.

Note: For the X53-449, a UPC code and UPC barcode is not printed on the Kenwood ESN Label. If necessary, cut the label at the cut-off line and attach only the serial number.

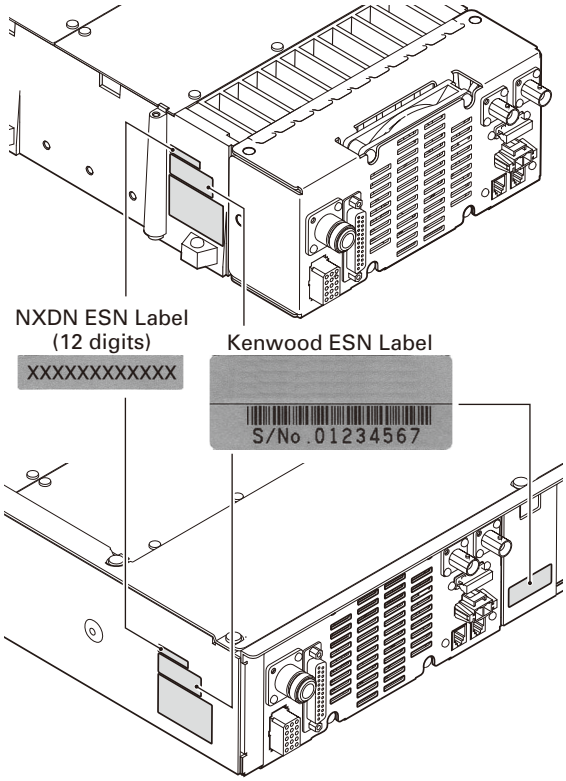

ADJUSTMENT

Test Equipment Required for Alignment

Test Equipment	Major Specifications	
1. Standard Signal Generator (SSG)	Frequency Range Modulation Output When performing the Frequency adjustment, the following accuracy is necessary. • 0.001ppm Use a standard oscillator for adjustments, if necessary.	400 to 520MHz Frequency modulation and external modulation –127dBm/0.1μV to greater than –20dBm/22.4mV
2. Power Meter	Input Impedance Operation Frequency Measurement Capability	50Ω 400 to 520MHz or more Vicinity of 100W
3. Deviation Meter	Frequency Range	400 to 520MHz
4. Digital Volt Meter (DVM)	Measuring Range Input Impedance	1V to 20V DC High input impedance for minimum circuit loading
5. Oscilloscope		DC through 30MHz
6. High Sensitivity Frequency Counter	Frequency Range Frequency Stability	10Hz to 600MHz 0.2ppm or less
7. Ammeter		15A or more
8. AF Volt Meter (AF V.M)	Frequency Range Voltage Range	50Hz to 10kHz 3mV to 3V
9. Audio Generator (AG)	Frequency Range Output	50Hz to 5kHz 0 to 1V
10. Distortion Meter	Capability Input Level	3% or less at 1kHz 50mV to 10Vrms
11. Voltmeter	Measuring Range Input Impedance	10V to 1.5V DC or less 50kΩ/V or greater
12. 4Ω Dummy Load		Approx. 4Ω, 5W

Test cable for microphone input (E30-3360-28)

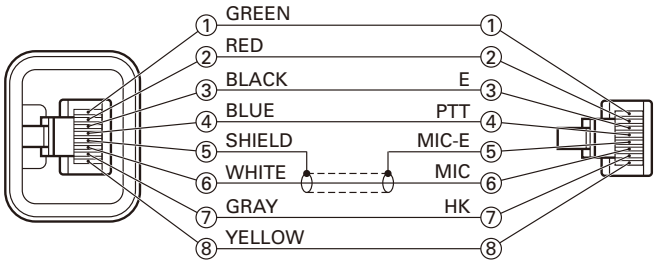

Tuning cable (E30-3383-05)

Adapter cable (E30-3383-05) is required for injecting an audio if PC tuning is used.
See "PC Mode" section for the connection.

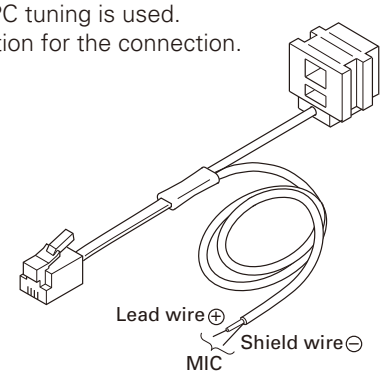

MIC connector (Front panel view)

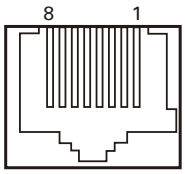

1: NC
2: SB
3: GND
4: PTT/TXD
(PC serial data from transceiver)
5: MIC GND
6: MIC
7: HOOK/RXD
(PC serial data to transceiver)
8: NC

Flat cable (36-pin) about 256mm

To connect the Control unit (CN38) to the TX-RX unit (CN800) while in servicing, you can use the 36-pin flat cable, E37-0979-05, which is available from the KENWOOD parts center.

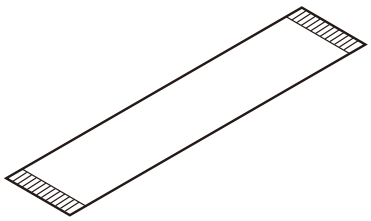

ADJUSTMENT

Test Channel

No.	K		K2	
	RX (MHz)	TX (MHz)	RX (MHz)	TX (MHz)
1	485.050000	485.100000	435.050000	435.100000
2	450.050000	450.100000	400.050000	400.100000
3	519.950000	519.900000	469.950000	469.900000
4	485.000000	485.000000	435.000000	435.000000
5	485.200000	485.200000	435.200000	435.200000
6	485.400000	485.400000	435.400000	435.400000
7~16	-	-	-	-

Test Signaling (Analog)

No.	RX (Decode Signaling)	TX (Encode Signaling)
1	None	None
2	None	100Hz Square Wave
3	QT 67.0Hz	QT 67.0Hz
4	QT 151.4Hz	QT 151.4Hz
5	QT 210.7Hz	QT 210.7Hz
6	QT 254.1Hz	QT 254.1Hz
7	DQT D023N	DQT D023N
8	DQT D754I	DQT D754I
9	DTMF Decode (CODE: 159D)	DTMF Encode (CODE: 159D)
10	None	DTMF Encode (CODE: 9)
11	None	Test Tone Encode
12	None	CW ID Encode (ID: VVV)
13	None	Courtesy Tone

Test Signaling (NXDN)

No.	RX (Decode Signaling)	TX (Encode Signaling)
1	RAN 1	RAN 1
2	RAN 1	PN 9
3	RAN 1	Maximum Deviation Pattern

- Signaling number 1 is used for link test.
- Signaling number 2 is used for TX modulation signal quality test. i.e, TX adjacent channel power, FSK error, Occupied bandwidth, Emission mask, etc.
- Signaling number 3 is used for TX deviation test. If the modulation mode is very narrow, the modulation frequency is 600Hz. If the modulation mode is narrow, the modulation frequency is 1200Hz.

Adjustment Points

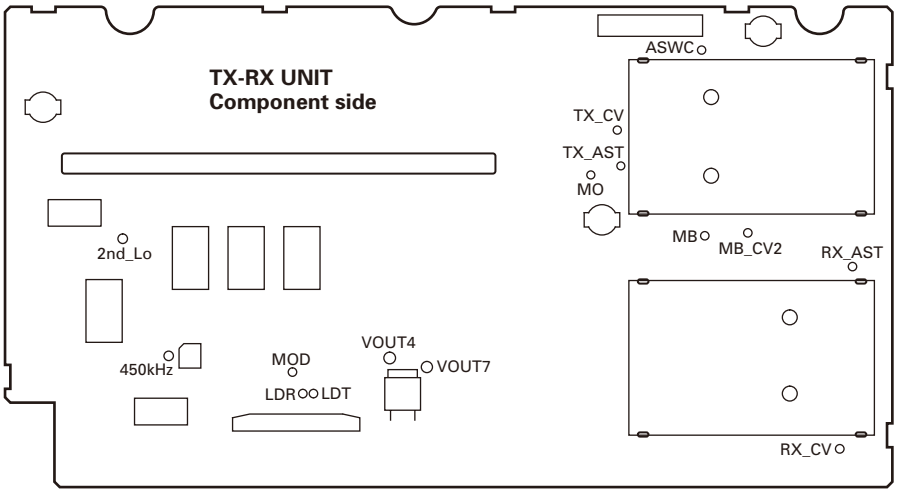

ADJUSTMENT

Common Section

Item	Condition	Measurement			Adjustment			Specifications / Remarks
		Test-equipment	Unit	Terminal	Unit	Parts	Method	
1. Setting	1) Connect the unit to a suitable power supply (13.6V). 2) Turn the power switch on after connecting a PC and FPU cable to the radio. 3) Start up the program for the adjustment.							
2. Receive Assist Adjust	FPU Test mode 1) Adjust Item: [Receive Assist] 2) Adjust Item: [A: Low], [A: Center], [A: High], [B: Low], [B: Center], [B: High]					PC ADJ	3.0V	±0.1V [V] indicator on the PC window shows "VCO lock voltage". Change the adjustment value to get "VCO lock voltage" within the limit of the specified voltage. Press [Apply All] button to store the adjustment value. Confirm the VCO lock voltage approximately 3 seconds after the adjustment value is changed.
	3) Adjust Item: [A: Low], [A: Center], [A: High], [B: Low], [B: Center], [B: High]	DVM	TX-RX	RX_CV			Check	3.0V±0.1V
3. Transmit Assist Adjust	FPU Test mode 1) Adjust Item: [Transmit Assist] 2) Adjust Item: [A: Low], [A: Center], [A: High], [B: Low], [B: Center], [B: High] Press [Transmit] button.					PC ADJ	3.0V	±0.1V [V] indicator on the PC window shows "VCO lock voltage". Change the adjustment value to get "VCO lock voltage" within the limit of the specified voltage. Press [Apply All] button to store the adjustment value. Confirm the VCO lock voltage approximately 3 seconds after the adjustment value is changed.
	3) Adjust Item: [A: Low], [A: Center], [A: High], [B: Low], [B: Center], [B: High] Press [Transmit] button.	DVM	TX-RX	TX_CV			Check	3.0V±0.1V
4. Sensitivity 1 Adjust	FPU Test mode 1) Adjust Item: [Sensitivity 1] 2) Adjust Item: [Low], [Low'], [Center], [High'], [High]					PC ADJ	Write the value as followings (typical value) [Low] = 20 **K**, 25 **K2** [Low'] = 70 [Center] = 105 **K**, 100 **K2** [High'] = 150 **K**, 145 **K2** [High] = 210 **K**, 205 **K2**	Press [Apply All] button to store the adjustment value. Variable-Capacitor Tune voltage is adjusted. (Output voltage is adjustment of BPF)

ADJUSTMENT

Item	Condition	Measurement			Adjustment			Specifications / Remarks
		Test-equipment	Unit	Terminal	Unit	Parts	Method	
5. Sensitivity 2 Adjust	FPU Test mode 1) Adjust Item: [Sensitivity 2] 2) Adjust Item: [Low], [Low'], [Center], [High'], [High]					PC ADJ	Write the value as followings (typical value) [Low] = 35 **K**, 25 **K2** [Low'] = 70 [Center] = 110 **K**, 100 **K2** [High'] = 150 **K**, 145 **K2** [High] = 190 **K**, 205 **K2**	Press [Apply All] button to store the adjustment value. Variable-Capacitor Tune voltage is adjusted. (Output voltage is adjustment of BPF)
6. AGC Target Level Adjustment	FPU Test mode 1) Adjust Item: [AGC Target Level Adjustment]						Write the value as followings (typical value) [AGC Target Level Adjustment] = –18	Press [Apply] button to store the adjustment value.
7. AGC Adjustment [Analog Narrow]	FPU Test mode 1) Adjust Item: [AGC Adjustment (Analog Narrow)] 2) Adjust Item: [Low], [Low'], [Center], [High'], [High]						Write the value as followings (typical value) [Low] = 256 [Low'] = 256 [Center] = 256 [High'] = 256 [High] = 256	Press [Apply All] button to store the adjustment value.
8. AGC Adjustment [Analog Wide]	FPU Test mode 1) Adjust Item: [AGC Adjustment (Analog Wide)] 2) Adjust Item: [Low], [Low'], [Center], [High'], [High]							
9. AGC Adjustment [NXDN Very Narrow]	FPU Test mode 1) Adjust Item: [AGC Adjustment (NXDN Very Narrow)] 2) Adjust Item: [Low], [Low'], [Center], [High'], [High]							
10. Frequency Adjust	FPU Test mode 1) Adjust Item: [Frequency] Connect the SSG to the RX ANT. CH: 1 (Analog Narrow) SSG Output: –47dBm (1mV) (CW (without modulation)) **Caution:** Perform the frequency adjustment under the following condition. • Temperature range of +23°C to +27°C (+73.4°F to +80.6°F). (The temperature is displayed on the frequency adjustment screen of the KPG-129D.) • Use an accuracy of 0.001ppm for the SSG. (Use a standard oscillator if necessary.)	SSG	Rear	RX ANT		PC ADJ		Press [Start] button of [Auto Tuning]. Press [Apply] Button to store the adjustment value after the automatic adjustment was finished. **Remark:** Wait for one hour after turning the repeater power switch OFF, then perform the frequency adjustment.

ADJUSTMENT

Receiver Section

Item	Condition	Measurement			Adjustment			Specifications / Remarks
		Test-equipment	Unit	Terminal	Unit	Parts	Method	
1. RD Level Adjust [Analog Wide]	FPU Test mode 1) Adjust Item: [RD Level (Analog Wide)] Connect the SSG to the RX ANT. SSG setting Frequency: Desired Frequency Output: –53dBm (501µV) MOD: 1.0kHz DEV: ±3.0kHz	SSG AF VTVM	Rear	RX ANT CONTROL I/O Jack RD (Pin No.10)		PC ADJ	80mV	±5mV Press [Apply] button to store the adjustment value.
2. RD Level Adjust [Analog Narrow]	FPU Test mode 1) Adjust Item: [RD Level (Analog Narrow)] Connect the SSG to the RX ANT. SSG setting Frequency: Desired Frequency Output: –53dBm (501µV) MOD: 1.0kHz DEV: ±1.5kHz							
3. RA Level Adjust [Analog Wide]	FPU Test mode 1) Adjust Item: [RA Level (Analog Wide)] Connect the SSG to the RX ANT. SSG setting Frequency: Desired Frequency Output: –53dBm (501µV) MOD: 1.0kHz DEV: ±3.0kHz	SSG AF VTVM	Rear	RX ANT CONTROL I/O Jack RA (Pin No.11)		PC ADJ	400mV	±20mV Press [Apply] button to store the adjustment value.
4. RA Level Adjust [Analog Nrrow]	FPU Test mode 1) Adjust Item: [RA Level (Analog Narrow)] Connect the SSG to the RX ANT. SSG setting Frequency: Desired Frequency Output: –53dBm (501µV) MOD: 1.0kHz DEV: ±1.5kHz							
5. Open Squelch Adjust [Analog Wide]	FPU Test mode 1) Adjust Item: [Open Squelch (Analog Wide)] Connect the SSG to the RX ANT. SSG setting Frequency: [Low], [Low'], [Center], [High'], [High] Output : 12dB SINAD level –1dB MOD: 1.0kHz DEV: ±3.0kHz	SSG Audio analyzer Oscilloscope	Rear	RX ANT		PC ADJ		Press [Apply] button to store the adjustment value. **Note:** Write the fixed value of "33" when the adjustment value is 27 or less.
	2) SSG output: OFF						Check	The squelch shall be closed.

ADJUSTMENT

Item	Condition	Measurement			Adjustment			Specifications / Remarks
		Test-equipment	Unit	Terminal	Unit	Parts	Method	
6. Open Squelch Adjust [Analog Narrow]	FPU Test mode 1) Adjust Item: [Open Squelch (Analog Narrow)] Connect the SSG to the RX ANT. SSG setting Frequency: [Low], [Low'], [Center], [High'], [High] Output : 12dB SINAD level –1dB MOD: 1.0kHz DEV: ±1.5kHz	SSG Audio analyzer Oscilloscope	Rear	RX ANT		PC ADJ		Press [Apply] button to store the adjustment value. **Note:** Write the fixed value of "30" when the adjustment value is 24 or less.
	2) SSG output: OFF						Check	The squelch shall be closed.
7. Open Squelch Adjust [NXDN Very Narrow]	FPU Test mode 1) Adjust Item: [Open Squelch (NXDN Very Narrow)] Connect the SSG to the RX ANT. SSG setting Frequency: [Low], [Low'], [Center], [High'], [High] Output: 12dB SINAD level of Analog Narrow –4dB MOD: OFF					PC ADJ		Press [Apply] button to store the adjustment value.
8. Tight Squelch Adjust [Analog Wide]	FPU Test mode 1) Adjust Item: [Tight Squelch (Analog Wide)] Connect the SSG to the RX ANT. SSG setting Frequency: [Low], [Low'], [Center], [High'], [High] Output : 12dB SINAD level +8dB MOD: 1.0kHz DEV: ±3.0kHz					PC ADJ		Press [Apply] button to store the adjustment value.
	2) SSG output: OFF						Check	The squelch shall be closed.
9. Tight Squelch Adjust [Analog Narrow]	FPU Test mode 1) Adjust Item: [Tight Squelch (Analog Narrow)] Connect the SSG to the RX ANT. SSG setting Frequency: [Low], [Low'], [Center], [High'], [High] Output : 12dB SINAD level +8dB MOD: 1.0kHz DEV: ±1.5kHz					PC ADJ		Press [Apply] button to store the adjustment value.
	2) SSG output: OFF						Check	The squelch shall be closed.

ADJUSTMENT

Item	Condition	Measurement			Adjustment			Specifications / Remarks
		Test-equipment	Unit	Terminal	Unit	Parts	Method	
10. RSSI Reference Adjust [Analog Wide]	FPU Test mode 1) Adjust Item: [RSSI Ref (Analog Wide)] Connect the SSG to the RX ANT. SSG setting Frequency: [Low], [Low'] [Center], [High'], [High] Output : 12dB SINAD level –1dB MOD: 1.0kHz DEV: ±3.0kHz	SSG Audio analyzer	Rear	RX ANT		PC ADJ		Press [Apply] button to store the adjustment value.
11. RSSI Reference Adjust [Analog Narrow]	FPU Test mode 1) Adjust Item: [RSSI Ref (Analog Narrow)] Connect the SSG to the RX ANT. SSG setting Frequency: [Low], [Low'] [Center], [High'], [High] Output : 12dB SINAD level –1dB MOD: 1.0kHz DEV: ±1.5kHz							
12. RSSI Reference Adjust [NXDN Very Narrow]	FPU Test mode 1) Adjust Item: [RSSI Ref (NXDN Very Narrow)] Connect the SSG to the RX ANT. SSG setting Frequency: [Low], [Low'] [Center], [High'], [High] Output : 12dB SINAD level for Analog Narrow –1dB MOD: OFF							**Remark:** Measure 12dB SINAD in Analog Narrow beforehand, when adjusting "12. RSSI Reference Adjust [NXDN Very Narrow]".
13. Low RSSI Adjust [Analog Wide]	FPU Test mode 1) Adjust Item: [Low RSSI (Analog Wide)] Connect the SSG to the RX ANT. SSG setting Frequency: [Low], [Low'] [Center], [High'], [High] Output: –118dBm (0.28μV) MOD: 1.0kHz DEV: ±3.0kHz	SSG	Rear	RX ANT		PC ADJ		Press [Apply] button to store the adjustment value.
14. Low RSSI Adjust [Analog Narrow]	FPU Test mode 1) Adjust Item: [Low RSSI (Analog Narrow)] Connect the SSG to the RX ANT. SSG setting Frequency: [Low], [Low'] [Center], [High'], [High] Output: –118dBm (0.28μV) MOD: 1.0kHz DEV: ±1.5kHz							

ADJUSTMENT

Item	Condition	Measurement			Adjustment			Specifications / Remarks
		Test-equipment	Unit	Terminal	Unit	Parts	Method	
15 .Low RSSI Adjust [NXDN Very Narrow]	FPU Test mode 1) Adjust Item: [Low RSSI (NXDN Very Narrow)] Connect the SSG to the RX ANT. SSG setting Frequency: [Low], [Low'] [Center], [High'], [High] Output: –118dBm (0.28μV) MOD: OFF	SSG	Rear	RX ANT		PC ADJ		Press [Apply] button to store the adjustment value.
16. High RSSI Adjust [Analog Wide]	FPU Test mode 1) Adjust Item: [High RSSI (Analog Wide)] Connect the SSG to the RX ANT. SSG setting Frequency: [Low], [Low'] [Center], [High'], [High] Output: –70dBm (70.7μV) MOD: 1.0kHz DEV: ±3.0kHz	SSG	Rear	RX ANT		PC ADJ		Press [Apply] button to store the adjustment value.
17. High RSSI Adjust [Analog Narrow]	FPU Test mode 1) Adjust Item: [High RSSI (Analog Narrow)] Connect the SSG to the RX ANT. SSG setting Frequency: [Low], [Low'] [Center], [High'], [High] Output: –70dBm (70.7μV) MOD: 1.0kHz DEV: ±1.5kHz							
18. High RSSI Adjust [NXDN Very Narrow]	FPU Test mode 1) Adjust Item: [High RSSI (NXDN Very Narrow)] Connect the SSG to the RX ANT. SSG setting Frequency: [Low], [Low'] [Center], [High'], [High] Output: –70dBm (70.7μV) MOD: OFF							
19. Receiver Sensitivity Check [Analog Wide]	1) Connect the SSG to the RX ANT. SSG setting Frequency: Desired Frequency Output: –53dBm (501μV) MOD: 1.0kHz DEV: ±3.0kHz AF: 0.45V/4Ω	SSG Audio analyzer Oscilloscope	Rear	RX ANT TEST/ SPKR Jack pin 12 4Ω load			Check	–115dBm (0.4μV) or Less
[Analog Narrow]	2) SSG setting DEV: ±1.5kHz							

ADJUSTMENT

Transmitter Section

Item	Condition	Measurement			Adjustment			Specifications / Remarks
		Test-equipment	Unit	Terminal	Unit	Parts	Method	
1. High Transmit Power Limit Adjust	FPU Test mode 1) Adjust Item: [High Transmit Power Limit Adjust] Frequency: [Low], [Low'], [Center], [High'], [High] Press [Transmit] button.	Power meter	Rear	TX ANT		PC ADJ	43W±1.5W	Press [Apply] button to store the adjustment value.
2. High Transmit Power Adjust	FPU Test mode 1) Adjust Item: [High Transmit Power] Frequency: [Low], [Low'], [Center], [High'], [High] Press [Transmit] button.						40W±0.5W	
3. Low Transmit Power Limit Adjust	FPU Test mode 1) Adjust Item: [Low Transmit Power Limit Adjust] Frequency: [Low], [Low'], [Center], [High'], [High] Press [Transmit] button.						28W±1.5W	
4. Low Transmit Power Adjust	FPU Test mode 1) Adjust Item: [High Transmit Power Adjust] Frequency: [Low], [Low'], [Center], [High'], [High] Press [Transmit] button.						25W±0.5W	
5. Maximum Deviation Adjust [NXDN Narrow]	FPU Test mode 1) Adjust Item: [Maximum Deviation (NXDN Narrow)]					PC ADJ	Write the value as followings (typical value) [Maximum Deviation (NXDN Narrow)] = 530	Press [Apply] button to store the adjustment value.
6. Maximum Deviation Adjust [NXDN Very Narrow]	FPU Test mode 1) Adjust Item: [Maximum Deviation (NXDN Very Narrow)]						Write the value as followings (typical value) [Maximum Deviation (NXDN Very Narrow)] = 530	
7. Maximum Deviation Adjust [Analog Wide]	FPU Test mode 1) Adjust Item: [Maximum Deviation (Analog Wide)]						Write the value as followings (typical value) [Maximum Deviation (Analog Wide)] = 530	
8. Maximum Deviation Adjust [Analog Narrow]	FPU Test mode 1) Adjust Item: [Maximum Deviation (Analog Narrow)]						Write the value as followings (typical value) [Maximum Deviation (Analog Narrow)] = 530	

ADJUSTMENT

Item	Condition	Measurement			Adjustment			Specifications / Remarks
		Test-equipment	Unit	Terminal	Unit	Parts	Method	
9. Balance Adjust [20Hz Adjustment]	FPU Test mode 1) Adjust Item: [Balance] Connect the Deviation Meter to the TX ANT end via the ATT. Deviation Meter setting LPF: 3kHz HPF: OFF De-emphasis: OFF 2) Adjust Item: [A: Low], [A: Center], [A: High], [B: Low], [B: Center], [B: High] Press [Transmit] button. 20Hz is transmitted.	Deviation meter Oscilloscope	Rear	TX ANT		PC ADJ	The Deviation of 20Hz frequency is fixed to 2.05kHz Deviation. Change the 2kHz adjustment value to become the same deviation to 20Hz within the specified range.	2kHz Tone deviation is within ±1.0% of 20Hz tone deviation. Press [Apply All] button to store the adjustment value after all adjustment point was adjusted.
[2.0kHz Adjustment]	FPU Test mode 1) Adjust Item: [Balance] [2kHz Sine Wave] check box is checked. 2) Adjust Item: [A: Low], [A: Center], [A: High], [B: Low], [B: Center], [B: High] Press [Transmit] button. Check while transmitting change to 2kHz.							
10. Standard Modulation Check [Analog Wide]	1) Connect the Deviation Meter to the TX ANT end via the ATT. Deviation Meter setting LPF: 15kHz HPF: OFF De-emphasis: OFF Detector: (p-p)/2 2) Connect the AG to the MIC Terminal of MIC connector. AG Frequency : 1kHz (Sine Wave) AG Output level: Adjust to become the 3kHz Deviation.	Deviation meter Oscilloscope AG DVM	Rear Front	TX ANT MIC			Check	5.0mV±1.5mV
[Analog Narrow]	1) Connect the Deviation Meter to the TX ANT end via the ATT. Deviation Meter setting LPF: 15kHz HPF: OFF De-emphasis: OFF Detector: (p-p)/2 2) Connect the AG to the MIC Terminal of MIC connector. AG Frequency : 1kHz (Sine Wave) AG Output level: Adjust to become the 1.5kHz Deviation.							

ADJUSTMENT

Item	Condition	Measurement			Adjustment			Specifications / Remarks
		Test-equipment	Unit	Terminal	Unit	Parts	Method	
11. TD Deviation Adjust [Analog Wide]	FPU Test mode 1) Adjust Item: [TD Deviation (Analog Wide)] Connect the Deviation Meter to the TX ANT end via the ATT. Deviation Meter setting LPF: 3kHz, HPF: OFF De-emphasis: OFF 2) Connect the AG to the TD Terminal of CONTROL I/O Jack. AG Frequency : 100Hz (Sine Wave) AG Output level : 0.5Vpp (177mVrms) Press [Transmit] button.	Deviation meter Oscilloscope AG AF VTVM	Rear	TX ANT CONTROL I/O Jack TD (Pin No.8)		PC ADJ	0.75kHz Deviation	±0.1kHz Press [Apply] button to store the adjustment value.
12. TD Deviation Adjust [Analog Narrow]	FPU Test mode 1) Adjust Item: [TD Deviation (Analog Narrow)] Connect the Deviation Meter to the TX ANT end via the ATT. Deviation Meter setting LPF: 3kHz, HPF: OFF De-emphasis: OFF 2) Connect the AG to the TD Terminal of CONTROL I/O Jack. AG Frequency : 100Hz (Sine Wave) AG Output level : 0.5Vpp (177mVrms) Press [Transmit] button.							
13. Transmit Audio Input (TA) Adjust [Analog Wide]	FPU Test mode 1) Adjust Item: [Transmit Audio Input (TA) (Analog Wide)] Connect the Deviation Meter to the TX ANT end via the ATT. Deviation Meter setting LPF: 15kHz, HPF: OFF De-emphasis: OFF 2) Connect the AG to the TA Terminal of CONTROL I/O Jack. AG Frequency : 1kHz (Sine Wave) AG Output level: 280mVrms Press [Transmit] button.	Deviation meter Oscilloscope AG AF VTVM	Rear	TX ANT CONTROL I/O Jack TA (Pin No.9)		PC ADJ	3.0kHz Deviation	±0.1kHz Press [Apply] button to store the adjustment value.
14. Transmit Audio Input (TA) Adjust [Analog Narrow]	FPU Test mode 1) Adjust Item: [Transmit Audio Input (TA) (Analog Narrow)] Connect the Deviation Meter to the TX ANT end via the ATT. Deviation Meter setting LPF: 15kHz, HPF: OFF De-emphasis: OFF 2) Connect the AG to the TA Terminal of CONTROL I/O Jack. AG Frequency : 1kHz (Sine Wave) AG Output level: 280mVrms Press [Transmit] button.						1.5kHz Deviation	±0.05kHz Press [Apply] button to store the adjustment value.

ADJUSTMENT

Item	Condition	Measurement			Adjustment			Specifications / Remarks
		Test-equipment	Unit	Terminal	Unit	Parts	Method	
15. QT Deviation Adjust [Analog Wide]	FPU Test mode 1) Adjust Item: [QT Deviation (Analog Wide)] Connect the Deviation Meter to the TX ANT end via the ATT. Deviation Meter setting LPF: 3kHz, HPF: OFF De-emphasis: OFF Detector: p-p/2 Press [Transmit] button.	Deviation meter Oscilloscope	Rear	TX ANT		PC ADJ	0.75kHz Deviation	±0.05kHz Press [Apply] button to store the adjustment value.
16. QT Deviation Adjust [Analog Narrow]	FPU Test mode 1) Adjust Item: [QT Deviation (Analog Narrow)] Connect the Deviation Meter to the TX ANT end via the ATT. Deviation Meter setting LPF: 3kHz, HPF: OFF De-emphasis: OFF Detector: p-p/2 Press [Transmit] button.						0.35kHz Deviation	±0.05kHz Press [Apply] button to store the adjustment value.
17. DQT Deviation Adjust [Analog Wide]	FPU Test mode 1) Adjust Item: [DQT Deviation (Analog Wide)] Connect the Deviation Meter to the TX ANT end via the ATT. Deviation Meter setting LPF: 3kHz, HPF: OFF De-emphasis: OFF Detector: Peak hold Press [Transmit] button.						0.75kHz Deviation	±0.05kHz Press [Apply] button to store the adjustment value.
18. DQT Deviation Adjust [Analog Narrow]	FPU Test mode 1) Adjust Item: [DQT Deviation (Analog Narrow)] Connect the Deviation Meter to the TX ANT end via the ATT. Deviation Meter setting LPF: 3kHz, HPF: OFF De-emphasis: OFF Detector: Peak hold Press [Transmit] button.						0.35kHz Deviation	±0.05kHz Press [Apply] button to store the adjustment value.
19. DTMF Deviation Adjust [Analog Wide]	FPU Test mode 1) Adjust Item: [DTMF Deviation (Analog Wide)] Connect the Deviation Meter to the TX ANT end via the ATT. Deviation Meter setting LPF: 15kHz, HPF: OFF De-emphasis: OFF Press [Transmit] button.	Deviation meter Oscilloscope	Rear	TX ANT		PC ADJ	3.0kHz Deviation	±0.1kHz Press [Apply] button to store the adjustment value.
20. DTMF Deviation Adjust [Analog Narrow]	FPU Test mode 1) Adjust Item: [DTMF Deviation (Analog Narrow)] Connect the Deviation Meter to the TX ANT end via the ATT. Deviation Meter setting LPF: 15kHz, HPF: OFF De-emphasis: OFF Press [Transmit] button.						1.5kHz Deviation	±0.05kHz Press [Apply] button to store the adjustment value.

ADJUSTMENT

Item	Condition	Measurement			Adjustment			Specifications / Remarks
		Test-equipment	Unit	Terminal	Unit	Parts	Method	
21. Test Tone Deviation Adjust [Analog Wide]	FPU Test mode 1) Adjust Item: [Test Tone Deviation (Analog Wide)] Connect the Deviation Meter to the TX ANT end via the ATT. Deviation Meter setting LPF: 15kHz HPF: OFF De-emphasis: OFF Press [Transmit] button.	Deviation meter Oscilloscope	Rear	TX ANT		PC ADJ	3.0kHz Deviation	±0.1kHz Press [Apply] button to store the adjustment value.
22. Test Tone Deviation Adjust [Analog Narrow]	FPU Test mode 1) Adjust Item: [Test Tone Deviation (Analog Narrow)] Connect the Deviation Meter to the TX ANT end via the ATT. Deviation Meter setting LPF: 15kHz HPF: OFF De-emphasis: OFF Press [Transmit] button.						1.5kHz Deviation	±0.05kHz Press [Apply] button to store the adjustment value.
23. CW ID Deviation Adjust [Analog Wide]	FPU Test mode 1) Adjust Item: [CW ID Deviation (Analog Wide)] Connect the Deviation Meter to the TX ANT end via the ATT. Deviation Meter setting LPF: 15kHz HPF: OFF De-emphasis: OFF Press [Transmit] button.						2.0kHz Deviation	±0.1kHz Press [Apply] button to store the adjustment value.
24. CW ID Deviation Adjust [Analog Narrow]	FPU Test mode 1) Adjust Item: [CW ID Deviation (Analog Narrow)] Connect the Deviation Meter to the TX ANT end via the ATT. Deviation Meter setting LPF: 15kHz HPF: OFF De-emphasis: OFF Press [Transmit] button.						1.0kHz Deviation	±0.05kHz Press [Apply] button to store the adjustment value.
25. Courtesy Tone Deviation Adjust [Analog Wide]	FPU Test mode 1) Adjust Item: [Courtesy Tone Deviation (Analog Wide)] Connect the Deviation Meter to the TX ANT end via the ATT. Deviation Meter setting LPF: 15kHz HPF: OFF De-emphasis: OFF Press [Transmit] button.						1.0kHz Deviation	±0.05kHz Press [Apply] button to store the adjustment value.
26. Courtesy Tone Deviation Adjust [Analog Narrow]	FPU Test mode 1) Adjust Item: [Courtesy Tone Deviation (Analog Narrow)] Connect the Deviation Meter to the TX ANT end via the ATT. Deviation Meter setting LPF: 15kHz HPF: OFF De-emphasis: OFF Press [Transmit] button.						0.5kHz Deviation	±0.05kHz Press [Apply] button to store the adjustment value.

ADJUSTMENT

Item	Condition	Measurement			Adjustment			Specifications / Remarks
		Test-equipment	Unit	Terminal	Unit	Parts	Method	
27. Repeat Gain Adjust [Analog Wide]	FPU Test mode 1) Adjust Item: [Repeat Gain (Analog Wide)] Connect the Deviation Meter to the TX ANT end via the ATT. Deviation Meter setting LPF: 15kHz HPF: OFF De-emphasis: OFF 2) Connect the SSG to the RX ANT. SSG setting Frequency: Desired Frequency Output: –53dBm (501μV) MOD: 1.0kHz DEV: ±1.0kHz	Deviation meter Oscilloscope SSG	Rear	TX ANT RX ANT		PC ADJ	1.0kHz Deviation	±0.1kHz Press [Apply] button to store the adjustment value.
28. Repeat Gain Adjust [Analog Narrow]	FPU Test mode 1) Adjust Item: [Repeat Gain (Analog Narrow)] Connect the Deviation Meter to the TX ANT end via the ATT. Deviation Meter setting LPF: 15kHz HPF: OFF De-emphasis: OFF 2) Connect the SSG to the RX ANT. SSG setting Frequency: Desired Frequency Output: –53dBm (501μV) MOD: 1.0kHz DEV: ±1.0kHz							

Confirmation and Alignment of Set-up to Prevent Receiver Desensitization

1. Confirmation of Duplexer alignment

The duplexer allows the Repeater to simultaneously transmit and receive. To accomplish this, in the programmed receive frequency, the transmit frequency must be notched or suppressed by 75dB or more. Additionally, on the programmed transmit frequency, the receive frequency must be notched or suppressed by 75dB or more. The following figures are examples of Duplexer alignment using a spectrum analyzer.

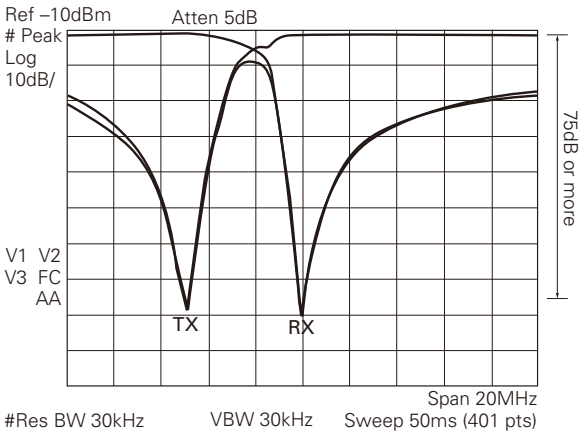

2. Confirmation of Repeater Desensitization

The following figure is a Test set-up for Repeater Desensitization.

After this Test set-up is completed, confirm the Repeater Desensitization as mentioned below.

1) Disable the repeater mode.
2) Adjust the level of the RF generator until 12dB SINAD is reached.
3) Increase the output of the RF generator by 1dB. (This increases the SINAD.)
4) Enable the repeater mode.
5) Read the SINAD level. It should not drop below 12dB SINAD. If the SINAD is less then 12dB, check the tightness of the connectors and the tuning of duplexer.

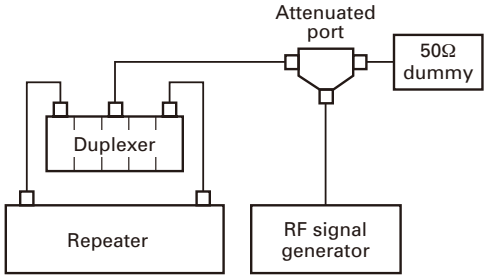

TERMINAL FUNCTION

Final Unit (X45-3930-XX) (A/3)

Pin No.	Name	I/O	Function
CN1 (To X57-795 CN610)			
1	TX IN	I	TX driver input signal (Coaxial)
CN201 (To X45-393 B/3 +B)			
1	+B	I	Power supply input
CN202 (To X45-393 B/3 GND)			
1	GND	-	Ground
CN203 (To X57-795 CN701)			
1	GND	-	Ground
2	+B	O	Power supply output
3	+B	O	Power supply output
CN204 (To X57-795 CN801)			
1	GND	-	Ground
2	8TC	I	8V power supply control
3	RAMP	I	RF power control voltage
4	ASWC	I	ANT switch control
5	FAN	I	FAN control
6	FDT	O	Coupler input voltage
7	TMP2	O	Temperature of X45 Final unit
8	TMP1	O	Temperature of X45 Final unit
9	PLIM	I	Power limit control
10	H/L	I	Power control
11	HWV2	O	Hardware version detect
CN205 (To FAN)			
1	FAB	O	FAN power supply
2	FAG	-	FAN ground

Final Unit (X45-3930-XX) (B/3)

Pin No.	Name	I/O	Function
+B (To X45-393 A/3 CN201)			
1	+B	O	Power supply output
GND (To X45-393 A/3 CN202)			
1	GND	-	Ground
+B1 (To DC 13.6V)			
1	+B	I	Power supply input
GND (To DC 13.6V)			
1	GND	-	Ground

Final Unit (X45-3930-XX) (C/3)

Pin No.	Name	I/O	Function
N_SYNC1, 2 (To X53-449 CN5)			
1	N_SYNC1_B	I/O	RS-485 differential signal 1-B
2	N_SYNC1_A	I/O	RS-485 differential signal 1-A
3	N_SYNC2_B	I/O	RS-485 differential signal 2-B
4	N_SYNC2_A	I/O	RS-485 differential signal 2-A
5	N_SYNC1_B	I/O	RS-485 differential signal 1-B
6	N_SYNC1_A	I/O	RS-485 differential signal 1-A
7	N_SYNC2_B	I/O	RS-485 differential signal 2-B
8	N_SYNC2_A	I/O	RS-485 differential signal 2-A
J401, 402 (N_SYNC1, 2 jack)			
1	N_SYNC2_A	I/O	RS-485 differential signal 2-A
2	N_SYNC2_B	I/O	RS-485 differential signal 2-B
3	N_SYNC1_A	I/O	RS-485 differential signal 1-A
4	N_SYNC1_B	I/O	RS-485 differential signal 1-B

Control Unit (X53-4490-10)

Pin No.	Name	I/O	Function
CN5 (To X45-393 C/3)			
1	N_SYNC1_B	I/O	RS-485 differential signal 1-B
2	N_SYNC1_A	I/O	RS-485 differential signal 1-A
3	N_SYNC2_B	I/O	RS-485 differential signal 2-B
4	N_SYNC2_A	I/O	RS-485 differential signal 2-A
5	N_SYNC1_B	I/O	RS-485 differential signal 1-B
6	N_SYNC1_A	I/O	RS-485 differential signal 1-A
7	N_SYNC2_B	I/O	RS-485 differential signal 2-B
8	N_SYNC2_A	I/O	RS-485 differential signal 2-A
CN38 (To X57-795 CN800)			
1	TMP1	I	Temperature of X45 Final unit
2	TMP2	I	Temperature of X45 Final unit
3	RAMP	O	RF power control voltage
4	FWD	I	RF power monitor voltage
5	TXASSIST	O	TX PLL assist voltage
6	RXASSIST	O	RX PLL assist voltage
7	TX_CV	I	TX VCO lock voltage
8	RX_CV	I	RX VCO lock voltage
9	GND	-	Ground
10	GND	-	Ground
11	TXVCOB	O	TX VCO B control signal
12	RXVCOA/B	O	RX VCO control signal to A or B
13	TXVCOA	O	TX VCO A control signal

TERMINAL FUNCTION

Pin No.	Name	I/O	Function
14	/RXPCS_TR	O	RX PLL chip select signal
15	LDT	I	TX PLL lock detect signal
16	/16_8PCS	O	Reference clock PLL chip select signal
17	LDR	I	RX PLL lock detect signal
18	/TXPCS	O	TX PLL chip select signal
19	SPSCLK0	O	Serial clock
20	SPSD0	O	Serial data
21	SBC	O	Switched +B control signal
22	GND	-	Ground
23	MOD	O	Audio signal for TX modulation
24	GND	-	Ground
25	RSSI	I	RSSI voltage
26	AGC	O	Auto gain control voltage
27	33A	O	3.3V voltage
28	/EWP	O	EEPROM write control signal
29	HWV1	I	Hardware version signal
30	I2CCK	O	Serial clock
31	SPSCLK1	O	Serial clock
32	I2CDA	I/O	Serial data
33	SPSD1	O	Serial data
34	/IOCS	I	IO expander chip select signal
35	/EVCS	O	DA converter chip select signal
36	NC	-	No connection
CN39			
IN	IF_SIG	I	450kHz IF signal
OUT	GND	-	Ground
CN40 (To X54-373 CN502)			
1	SB	O	Power supply input
2	SB	O	Power supply input
3	GND	-	Ground
4	NC	-	No connection
5	DAT	O	Serial data
6	PSW	I	Power switch signal
7	STB1	O	Data latch signal
8	CLK	O	Serial clock
9	SOE	O	Output enable signal
10	TXD1	I/O	MIC PTT, UART TX data
11	K1	I	Key scan input
12	RXD1	I	Hook detect signal, UART TX data
13	K2	I	Key scan input
14	K3	I	Key scan input

Pin No.	Name	I/O	Function
15	K4	O	Key scan output
16	K5	O	Key scan output
17	VLI	I	Speaker audio level control voltage
18	5C	O	5V voltage
19	MIG	-	MIC ground
20	MIC	I	MIC signal
CN41 (To TEST/SPKR 15-pin Connector)			
1	SB	O	Power supply output
2	SB	O	Power supply input
3	GND	-	Ground
4	GND	-	Ground
CN42 (To TEST/SPKR 15-pin Connector)			
1	AO5	O	Auxiliary output 5
2	AO4	O	Auxiliary output 4
3	AO3	O	Auxiliary output 3
4	SPO	O	Speaker AF output
5	SPO	O	Speaker AF output
6	AO2	O	Auxiliary output 2
7	AO1	O	Auxiliary output 1
8	SPI	I	Internal speaker AF input
9	RSI	O	RSSI voltage
10	RD	O	RX data output
11	SPG	-	Speaker ground
12	SPG	-	Speaker ground
CN43 (To INT SPKR)			
1	SPO	O	Internal speaker AF output
2	SPG	-	Speaker ground
CN44 (To CONTROL I/O 25-pin D-sub Connector)			
1	NC	-	No connection
2	NC	-	No connection
3	SPM_D25	I	Speaker mute signal input
4	IO6_D25	I/O	Programmable function input/output 6
5	RXG	-	RX signal ground for RA,RD
6	IO5_D25	I/O	Programmable function input/output 5
7	RA_D25	O	RX-Audio output (voice)
8	IO4_D25	I/O	Programmable function input/output 4
9	RD_D25	O	RX-DATA output (data or signaling)
10	IO3_D25	I/O	Programmable function input/output 3
11	TA_D25	I	TX audio input (voice)
12	IO2_D25	I/O	Programmable function input/output 2
13	TD_D25	I	TX-DATA input (data or signaling)

TERMINAL FUNCTION

Pin No.	Name	I/O	Function
14	IO1_D25	I/O	Programmable function input/output 1
15	DG	-	Control line ground
16	TXG	-	TX signal ground for TA,TD
17	AI3_D25	I	Programmable function input 3
18	BER_DATA_D25	O	Bit error rate data
19	AI2_D25	I	Programmable function input 2
20	SC_D25	O	Squelch control output
21	AI1_D25	I	Programmable function input 1
22	/EPTT_D25	I	External PTT
23	TXD0_D25	O	UART TX data
24	EXT_MON_D25	I	External monitor signal
25	RXD0_D25	I	UART RX data
26	BER_CLK_D25	O	Bit error rate clock
27	NC (RSSI)		No connection (RSSI)
28	NC	-	No connection
29	NC	-	No connection
30	NC	-	No connection
CN301 (To X57-795 CN700)			
1	GND	-	Ground
2	+B	I	Power supply input
3	SB	I	Power supply input

Display Unit (X54-3730-20) (A/2)

Pin No.	Name	I/O	Function
CN501 (To X54-373 B/2 CN601)			
1	HK	I	Hook detection input/ RXD input
2	MIC	I	MIC signal input
3	MIG	-	MIC ground
4	PTT	I/O	PTT input/ TDX output
5	GND	-	Ground
6	NC	-	No connection
7	SB	O	Power supply output after power switch
8	NC	-	No connection
9	GND	-	Ground
10	5M	O	Common 5V output
11	VLI	I	Volume control input for AF signal
CN502 (To X53-449 CN40)			
1	MIG	-	MIC ground
2	MIC	O	MIC signal output
3	VLI	O	Volume control output for AF signal
4	5C	I	Common 5V output
5	K4	I	KEY input 4
6	K5	I	KEY input 5
7	K2	O	KEY input 2
8	K3	O	KEY input 3
9	K1	O	KEY input 1
10	HK/RXD	O	Hook detection output/ RXD input
11	SOE	I	Output enable for shift register
12	PTT/TXD	I/O	PTT output/ TDX input
13	STB1	I	Strobe data for shift register
14	CLK	I	Clock data input
15	DAT	I	Serial data input
16	PSW	O	Power switch output
17	GND	-	Ground
18	NC	-	No connection
19	SB	I	Power supply output after power switch
20	SB	I	Power supply output after power switch

Display Unit (X54-3730-20) (B/2)

Pin No.	Name	I/O	Function
CN601 (To X54-373 A/2 CN501)			
1	VLI	O	Volume control output for AF signal
2	5M	I	Common 5V input
3	GND	-	Ground
4	NC	-	No connection
5	SB	I	Power supply output after power switch
6	NC	-	No connection
7	GND	-	Ground
8	PTT	I/O	PTT output/ TDX input
9	MIG	-	MIC ground
10	MIC	O	MIC signal output
11	HK	O	Hook detection output/ RXD output
J601 (MIC jack)			
1	NC	-	No connection
2	SB	O	Power supply output after power switch
3	GND	-	Ground
4	PTT/TXD	I/O	PTT input/ TDX output
5	MIG	-	MIC ground
6	MIC	I	MIC signal input
7	HOOK/RXD	I	Hook detection input/ RXD input
8	NC	-	No connection

TERMINAL FUNCTION

TX-RX Unit (X57-7950-XX)

Pin No.	Name	I/O	Function
CN101 (To RX ANT)			
1	RX_SIGNAL	I	Receive signal input (Coaxial)
CN202 (To X58-509 CN350)			
1	GND	-	Ground
2	NC	-	No connection
3	80C_2	O	8V power supply
4	RXVCOA/B	O	VCO select
5	RX_CV	I	Control voltage input
6	NC	-	No connection
7	RXASSIST	O	Assist voltage output
CN203 (To X58-509 CN351)			
1	VO	I	VCO input
2	GND	-	Ground
CN204 (To X58-509 CN303)			
1	FIN	O	VCO output
2	SPSCLK0	O	PLL clock output
3	/RXPCS_TR	O	PLL chip select output
4	SPSD0	O	PLL data output
5	33C	O	3.3V power supply
6	50C	O	5V power supply
7	LDR	I	PLL lock detect input
8	REF	O	19.2MHz reference clock output
CN500 (To Ext IN)			
1	REF IN	I	External reference input (Coaxial)
CN605 (To X58-510 CN350)			
1	GND	-	Ground
2	TXVCOB	O	VCOB select
3	80C_1	O	8V power supply
4	TXVCOA	O	VCOA select
5	TX_CV	I	Control voltage input
6	MO	O	Modulation output
7	TXASSIST	O	Assist voltage output
CN608 (To X58-510 CN351)			
1	VO	I	VCO input
2	GND	-	Ground
CN609 (To X58-510 CN303)			
1	FIN	O	VCO output
2	SPSCLK0	O	PLL clock output
3	/TXPCS	O	PLL chip select output
4	SPSD0	O	PLL data output
5	33C	O	3.3V power supply
6	50C	O	5V power supply
7	LDT	I	PLL lock detect input
8	REF	O	16.8MHz reference clock output
CN610 (To X45-393 A/3 CN1)			
1	TX OUT	O	TX driver output signal (Coaxial)
CN700 (To X53-449 CN301)			
1	GND	-	Ground
2	+B	O	Power supply output
3	SB	O	Power supply output
CN701 (To X45-393 A/3 CN203)			
1	GND	-	Ground
2	+B	I	Power supply input
3	+B	I	Power supply input
CN800 (To X53-449 CN38)			
1	NC	-	No connection
2	/EVCS	I	DA converter chip select signal
3	/IOCS	O	IO expander chip select signal
4	SPSD1	I	Serial data
5	I2CDA	I/O	Serial data
6	SPSCLK1	I	Serial clock
7	I2CCK	I	Serial clock
8	HWV1	O	Hardware version signal
9	/EWP	I	EEPROM write control signal
10	33A	I	3.3V voltage
11	AGC	I	Auto gain control voltage
12	RSSI	O	RSSI voltage
13	GND	-	Ground
14	MOD	I	Audio signal for TX modulation
15	GND	-	Ground
16	SBC	I	Switched +B control signal
17	SPSD0	I	Serial data
18	SPSCLK0	I	Serial clock
19	/TXPCS	I	TX PLL chip select signal
20	LDR	O	RX PLL lock detect signal
21	/16_8PCS	I	Reference clock PLL chip select signal
22	LDT	O	TX PLL lock detect signal
23	/RXPCS_TR	I	RX PLL chip select signal
24	TXVCOA	I	TX VCO A control signal
25	RXVCOA/B	I	RX VCO control signal to A or B
26	TXVCOB	I	TX VCO B control signal

TERMINAL FUNCTION

Pin No.	Name	I/O	Function
27	GND	-	Ground
28	GND	-	Ground
29	RX_CV	O	RX VCO lock voltage
30	TX_CV	O	TX VCO lock voltage
31	RXASSIST	I	RX PLL assist voltage
32	TXASSIST	I	TX PLL assist voltage
33	FWD	O	RF power monitor voltage
34	RAMP	I	RF power control voltage
35	TMP2	O	Temperature of X45 Final unit
36	TMP1	O	Temperature of X45 Final unit
CN801 (To X45-393 A/3 CN204)			
1	HWV2	I	Hardware version detect
2	H/L	O	Power control
3	PLIM	O	Power limit control
4	TMP1	I	Temperature of X45 Final unit
5	TMP2	I	Temperature of X45 Final unit
6	FDT	I	Coupler input voltage
7	FAN	O	FAN control
8	ASWC	O	ANT switch control
9	RAMP	O	RF power control voltage
10	8TC	O	8V power supply control
11	GND	-	Ground
CN802 (To X53-449 CN39)			
1	IF_SIG	O	450kHz IF signal (Coaxial)

RX VCO/PLL Unit (X58-5090-XX)

Pin No.	Name	I/O	Function
CN303 (To X57-795 CN204)			
1	FIN	I	VCO input
2	SPSCLK0	I	PLL clock input
3	/RXPCS_TR	I	PLL chip select input
4	SPSD0	I	PLL data input
5	33C	I	3.3V power supply
6	50C	I	5V power supply
7	LDR	O	PLL Lock detect output
8	REF	I	19.2MHz reference clock input
CN350 (To X57-795 CN202)			
1	GND	-	Ground
2	NC	-	No connection
3	80C_2	I	8V power supply
4	RXVCOA/B	I	VCO select
5	RX_CV	O	Control voltage output
6	NC	-	No connection
7	RXASSIST	I	Assist voltage input
CN351 (To X57-795 CN203)			
1	VO	O	VCO output
2	GND	-	Ground

TX VCO/PLL Unit (X58-5100-XX)

Pin No.	Name	I/O	Function
CN303 (To X57-795 CN609)			
1	FIN	I	VCO input
2	SPSCLK0	I	PLL clock input
3	/TXPCS	I	PLL chip select input
4	SPSD0	I	PLL data input
5	33C	I	3.3V power supply
6	50C	I	5V power supply
7	LDT	O	PLL lock detect output
8	REF	I	16.8MHz reference clock input
CN350 (To X57-795 CN605)			
1	GND	-	Ground
2	TXVCOB	I	VCOB select
3	80C_1	I	8V power supply
4	TXVCOA	I	VCOA select
5	TX_CV	O	Control voltage output
6	MO	I	Modulation input
7	TXASSIST	I	Assist voltage input
CN351 (To X57-795 CN608)			
1	VO	O	VCO output
2	GND	-	Ground

TERMINAL FUNCTION

CONTROL I/O 25-pin D-sub Connector

Pin No	Pin Name	I/O	Signal Type	Signal Summary	Specification	Min	Typ	Max	Unit	Remarks
1	NC (RSSI)	-	-	-	-	-	-	-	-	
2	RXD 2	I	Digital	Serial Data input 2 RS-232C level	-	–15	-	+15	V	
3	TXD 2	O	Digital	Serial Data output 2 RS-232C level	-	±3.5	±4.2		V	
4	AI1	I	Digital	Programmable Function Input 1 /CMOS	VIH	0.8Vcc		Vcc	V	Vcc=5V±2%
					VIL	0		0.2Vcc	V	
					Input impedance		47k		Ohm	47k ohm PU to Vcc
5	AI2	I	Digital	Programmable Function Input 2 /CMOS	VIH	0.8Vcc		Vcc	V	Vcc=5V±2%
					VIL	0		0.2Vcc	V	
					Input impedance		47k		Ohm	47k ohm PU to Vcc
6	AI3	I	Digital	Programmable Function Input 3 /CMOS	VIH	0.8Vcc		Vcc	V	Vcc=5V±2%
					VIL	0		0.2Vcc	V	
					Input impedance		47k		Ohm	47k ohm PU to Vcc
7	DG	-	GND	Digital GND	-	-	-	-	-	
8	TD	I	Analog	TX Data Input (signaling)	INPUT: 0.1kHz/0.5Vp-p	0.7	0.75	0.8	kHzDEV	NFM/WFM
					Input Impedance		600		Ohm	600 ohm PDis applied to GND.
9	TA	I	Analog	TX Audio Input (voice)	1kHz/60% Dev	270	280	290	mV	
					Input impedance		600		Ohm	600 ohm PDis applied to GND.
10	RD	O	Analog	RX Data Output (signaling) Not squelched	INPUT: 60% Dev.	75	80	85	mV	
11	RA	O	Analog	RX Audio Output (voice) Squelched	INPUT: 60% Dev.	380	400	420	mV	
12	RXG	-	GND	RX Signal GND	-	-	-	-	-	
13	SPM	I	Digital	Speaker Mute /CMOS	VIH	0.7Vcc	-	5.5	V	Vcc=3.3V±2%
					VIL	-	-	0.3Vcc	V	
					Input impedance		47k		Ohm	47k ohm PU to Vcc
14	BER_CLK	O	Digital	for Bit Error Rate Clock	VOH (IO=–20μA)	4.4	4.5		V	
					VOL (IO=20μA)		0	0.1	V	
15	EMON	I	Digital	External Monitor Switch	VIH	0.8Vcc		Vcc	V	Vcc=5V±2%
					VIL	0		0.2Vcc	V	
					Input impedance		47k		Ohm	
16	EPTT	I	Digital	External PTT Switch	VIH	2.0			V	Vcc=5V ±2%
					VIL			0.8	V	
					Input impedance		47k		Ohm	47k ohm PU to Vcc
17	SC	O	Digital	Squelch Control	VOH (Vcc=5V, IO=–3mA)	Vcc–0.7			V	
					VOL (Vcc=5V, IO=8mA)			0.6	V	
18	BER_DAT	O	Digital	for Bit Error Rate Data	VOH (IO=–20μA)	4.4	4.5		V	
					VOL (IO=20μA)		0	0.1	V	

TERMINAL FUNCTION

Pin No	Pin Name	I/O	Signal Type	Signal Summary	Specification	Min	Typ	Max	Unit	Remarks
19	TXG	-	GND	TX Signal GND	-	-	-	-	-	
20	IO1	I	Digital	Programmable Function I/O 1	VIH	0.8Vcc		Vcc	V	Vcc=5V±2%
					VIL	0		0.2Vcc	V	
					Input impedance		47k		Ohm	47k ohm PU to Vcc
		O			VOH (Vcc=5V, IO=–3mA)	Vcc–0.7			V	
					VOL (Vcc=5V, IO=8mA)			0.6	V	
21	IO2	I	Digital	Programmable Function I/O 2	VIH	0.8Vcc		Vcc	V	Vcc=5V±2%
					VIL	0		0.2Vcc	V	
					Input impedance		47k		Ohm	47k ohm PU to Vcc
		O			VOH (Vcc=5V, IO=–3mA)	Vcc–0.7			V	
					VOL (Vcc=5V, IO=8mA)			0.6	V	
22	IO3	I	Digital	Programmable Function I/O 3	VIH	0.8Vcc		Vcc	V	Vcc=5V±2%
					VIL	0		0.2Vcc	V	
					Input impedance		47k		Ohm	47k ohm PU to Vcc
		O			VOH (Vcc=5V, IO=–3mA)	Vcc–0.7			V	
					VOL (Vcc=5V, IO=8mA)			0.6	V	
23	IO4	I	Digital	Programmable Function I/O 4	VIH	0.8Vcc		Vcc	V	Vcc=5V±2%
					VIL	0		0.2Vcc	V	
					Input impedance		47k		Ohm	47k ohm PU to Vcc
		O			VOH (Vcc=5V, IO=–3mA)	Vcc–0.7			V	
					VOL (Vcc=5V, IO=8mA)			0.6	V	
24	IO5	I	Digital	Programmable Function I/O 5	VIH	0.8Vcc		Vcc	V	Vcc=5V±2%
					VIL	0		0.2Vcc	V	
					Input impedance		47kΩ		V	47k ohm PU to Vcc
		O			VOH (Vcc=5V, IO=–3mA)	Vcc–0.7			V	
					VOL (Vcc=5V, IO=8mA)			0.6	V	
25	IO6	I	Digital	Programmable Function I/O 6	VIH	0.8Vcc		Vcc	V	Vcc=5V±2%
					VIL	0		0.2Vcc	V	
					Input impedance		47kΩ		V	47k ohm PU to Vcc
		O			VOH (Vcc=5V, IO=–3mA)	Vcc–0.7			V	
					VOL (Vcc=5V, IO=8mA)			0.6	V	

TERMINAL FUNCTION

TEST/SPKR 15-pin Connector

Pin No.	Pin Name	I/O	Signal Type	Configu-ration Change	Signal Summary	Specification	Min	Typ	Max	Unit	Remarks
1	SB	-	-	No	Power Supply	Voltage value	10.8	13.6	15.6	V	
						Supply current			1	A	
2	SB	-	-	No	Power Supply	Voltage value	10.8	13.6	15.6	V	
						Supply current			1	A	
3	NC	-	-	-	-	-					
4	GND	-	GND	No	Digital GND						
5	GND	-	GND	No	Digital GND						
6	SPG	-	GND	No	Speaker GND		-	-			
7	RD	O	Analog	No	RX Data Output (signaling) Not squelched	INPUT: 60% Dev.	75	80	85	mV	
8	RSSI	O	Analog	No	RSSI Output	Amplitude value	0		3.3	V	
						Allowable Load value	10k			Ohm	
9	SPI	I	Analog	No	Internal Speaker Input		-	-	-		
10	AO1	O	Digital	default	Auxiliary Output 1 Open collector	External voltage value			16	V	
						Supply current			200	mA	
				$R203	Auxiliary Output 1 Open collector with PU	PU resistor	4.7k	47k	47k	Ohm	Vcc=5V±2%
						VOL (IO=0mA)			0.1	V	
11	AO2	O	Digital	default	Auxiliary Output 2 Open collector	External Voltage value			16	V	
						Supply current			200	mA	
				$R202	Auxiliary Output 2 Open collector with PU	PU resistor	4.7k	47k	47k	Ohm	Vcc=5V±2%
						VOL (IO=0mA)			0.1	V	
12	SPO	O	Analog	No	External Speaker Output	Output level			4	W	
13	AO3	O	Digital	default	Auxiliary Output 3 Open collector	External voltage value			16	V	
						Supply current			200	mA	
				$R201	Auxiliary Output 3 Open collector with PU	PU resistor	4.7k	47k	47k	Ohm	Vcc=5V±2%
						VOL (IO=0mA)			0.1	V	
14	AO4	O	Digital	default	Auxiliary Output 4 Open collector	External voltage value			16	V	
						Supply current			200	mA	
				$R200	Auxiliary Output 4 Open collector with PU	PU resistor	4.7k	47k	47k	Ohm	Vcc=5V±2%
						VOL (IO=0mA)			0.1	V	
15	AO5	O	Digital	default	Auxiliary Output 5 Open collector	External voltage value			16	V	
						Supply current			200	mA	
				$R198	Auxiliary Output 5 Open collector with PU	PU resistor	4.7k	47k	47k	Ohm	Vcc=5V±2%
						VOL (IO=0mA)			0.1	V	

NXR-810 PC BOARD

FINAL UNIT (X45-3930-XX) -10: K2 -11: K
Component side view (J79-0264-19)

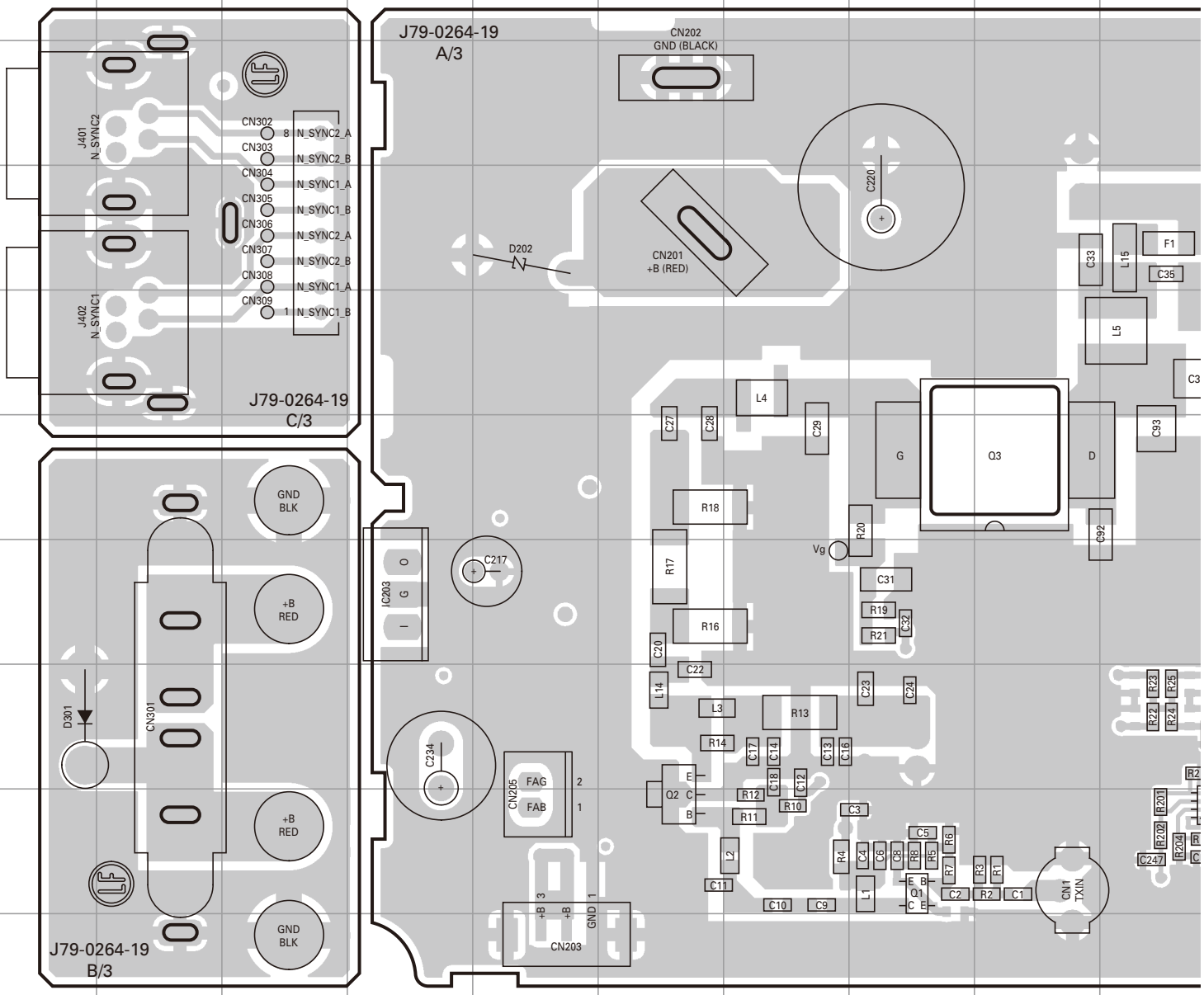

Ref. No.	Address	Ref. No.	Address
IC201	9J	D2	8M
IC202	8L	D3	9Q
IC203	7D	D4	8S
Q1	9H	D5	8S
Q2	9F	D8	4Q
Q3	6I	D201	8K
Q4	5L	D202	4E
D1	8Q	D301	8A

PC BOARD NXR-810

FINAL UNIT (X45-3930-XX) -10: K2 -11: K
Component side view (J79-0264-19)

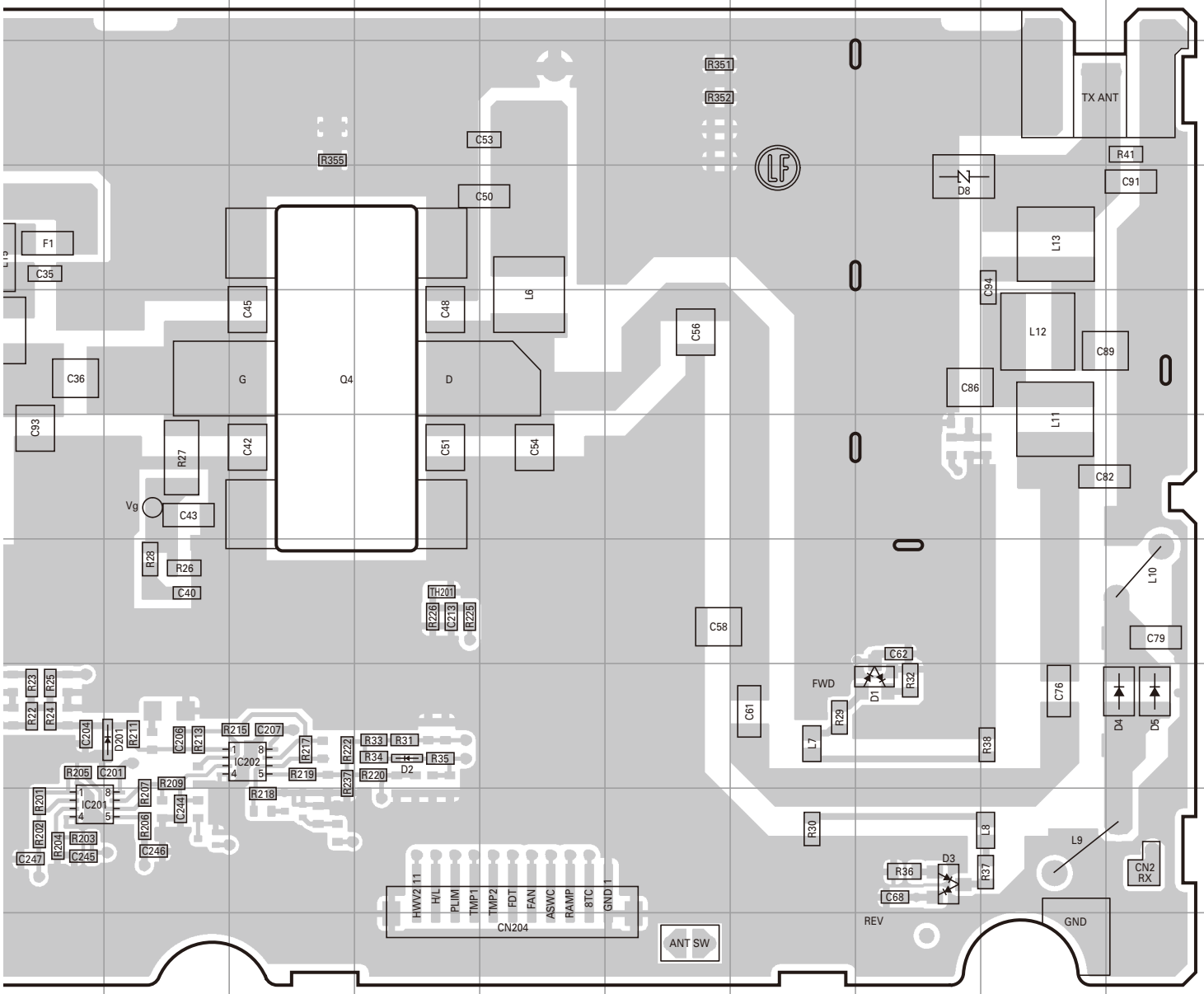

Component side

Layer 1	
Layer 2	
Layer 3	
Layer 4	

Foil side

NXR-810 PC BOARD

FINAL UNIT (X45-3930-XX) -10: K2 -11: K
Foil side view (J79-0264-19)

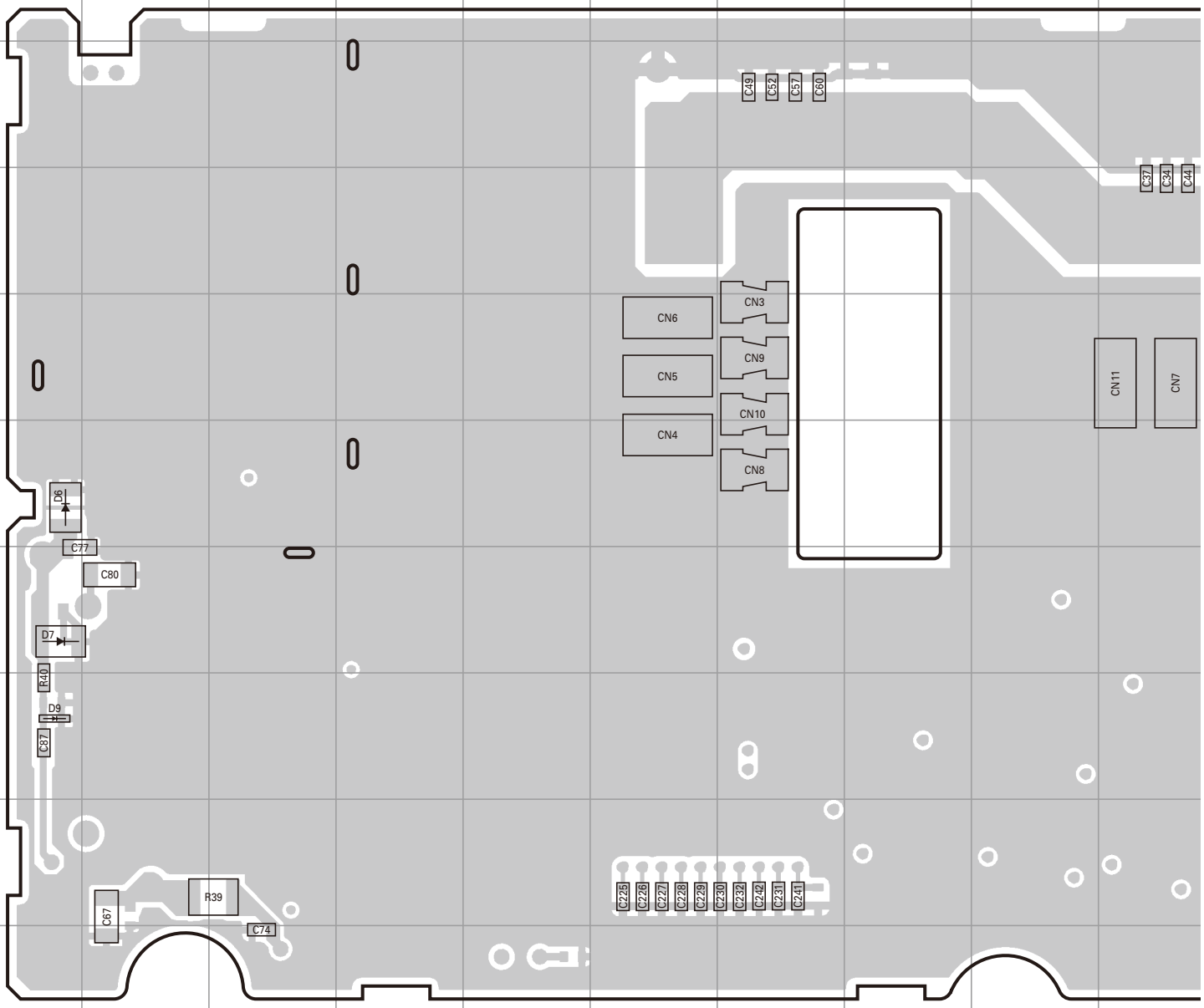

Ref. No.	Address	Ref. No.	Address
Q203	7O	D6	6A
Q204	6O	D7	7A
Q205	7P	D9	8A
Q206	6P	D203	9O
Q207	9O		

FINAL UNIT (X45-3930-XX) -10: K2 -11: K
Foil side view (J79-0264-19)

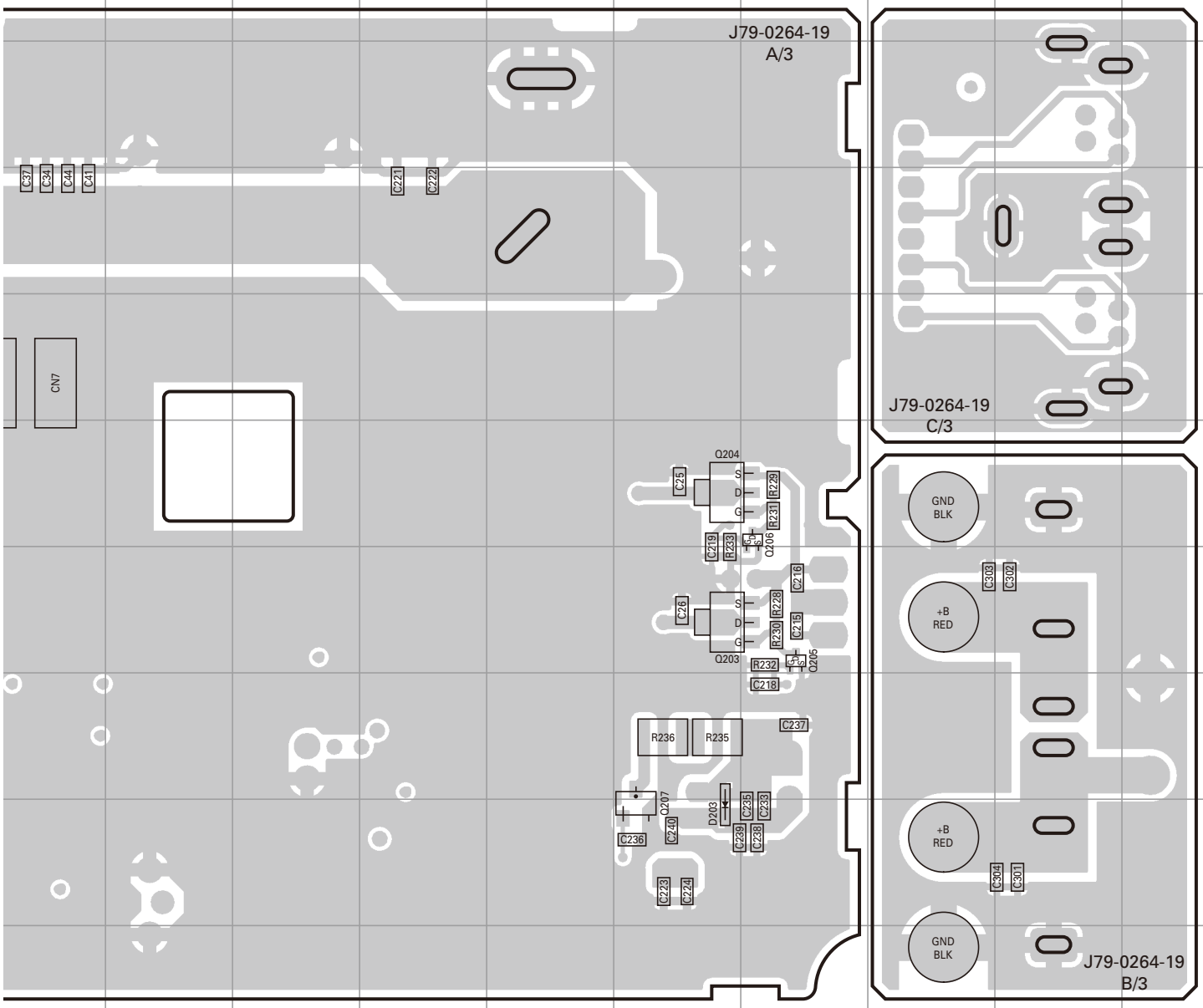

Component side
Layer 1
Layer 2
Layer 3
Layer 4
Foil side

NXR-810 PC BOARD

CONTROL UNIT (X53-4490-10)
Component side view (J79-0277-09)

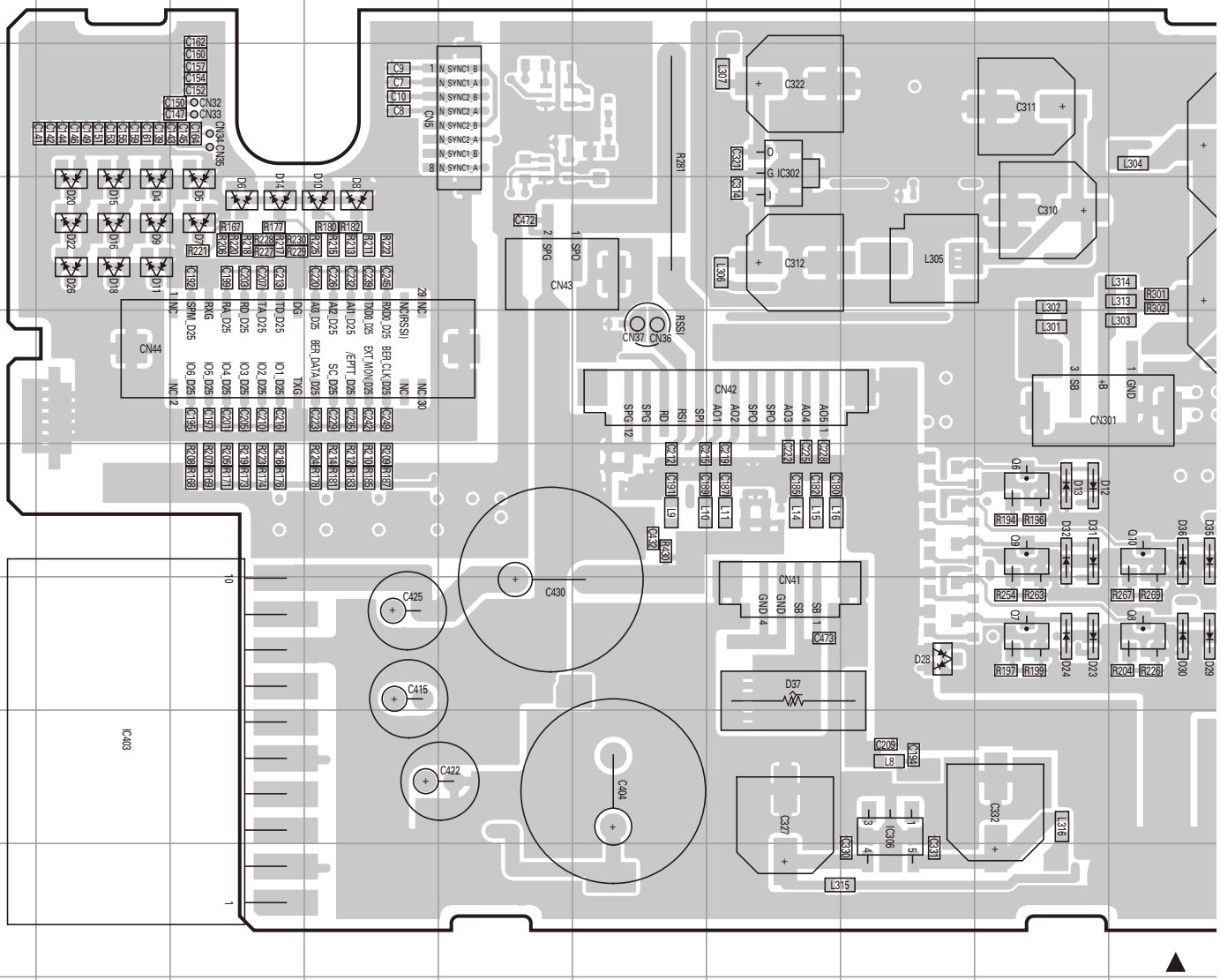

Ref. No.	Address	Ref. No.	Address	Ref. No.	Address	Ref. No.	Address	Ref. No.	Address
IC25	8N	Q6	6I	D7	4C	D18	4B	D32	6I
IC26	8N	Q7	7I	D8	4D	D20	4B	D35	6J
IC27	8M	Q8	7J	D9	4B	D22	4B	D36	6J
IC28	8M	Q9	6I	D10	4D	D23	7I	D37	7G
IC302	3G	Q10	6J	D11	4B	D24	7I	D302	4N
IC303	4M	Q302	5L	D12	6I	D26	4B	D304	5L
IC304	4N	Q303	5L	D13	6I	D28	7H	D305	5L
IC305	4R	D4	4B	D14	4C	D29	7J		
IC306	8H	D5	4C	D15	4B	D30	7J		
IC403	8B	D6	4C	D16	4B	D31	6I		

CONTROL UNIT (X53-4490-10)
Component side view (J79-0277-09)

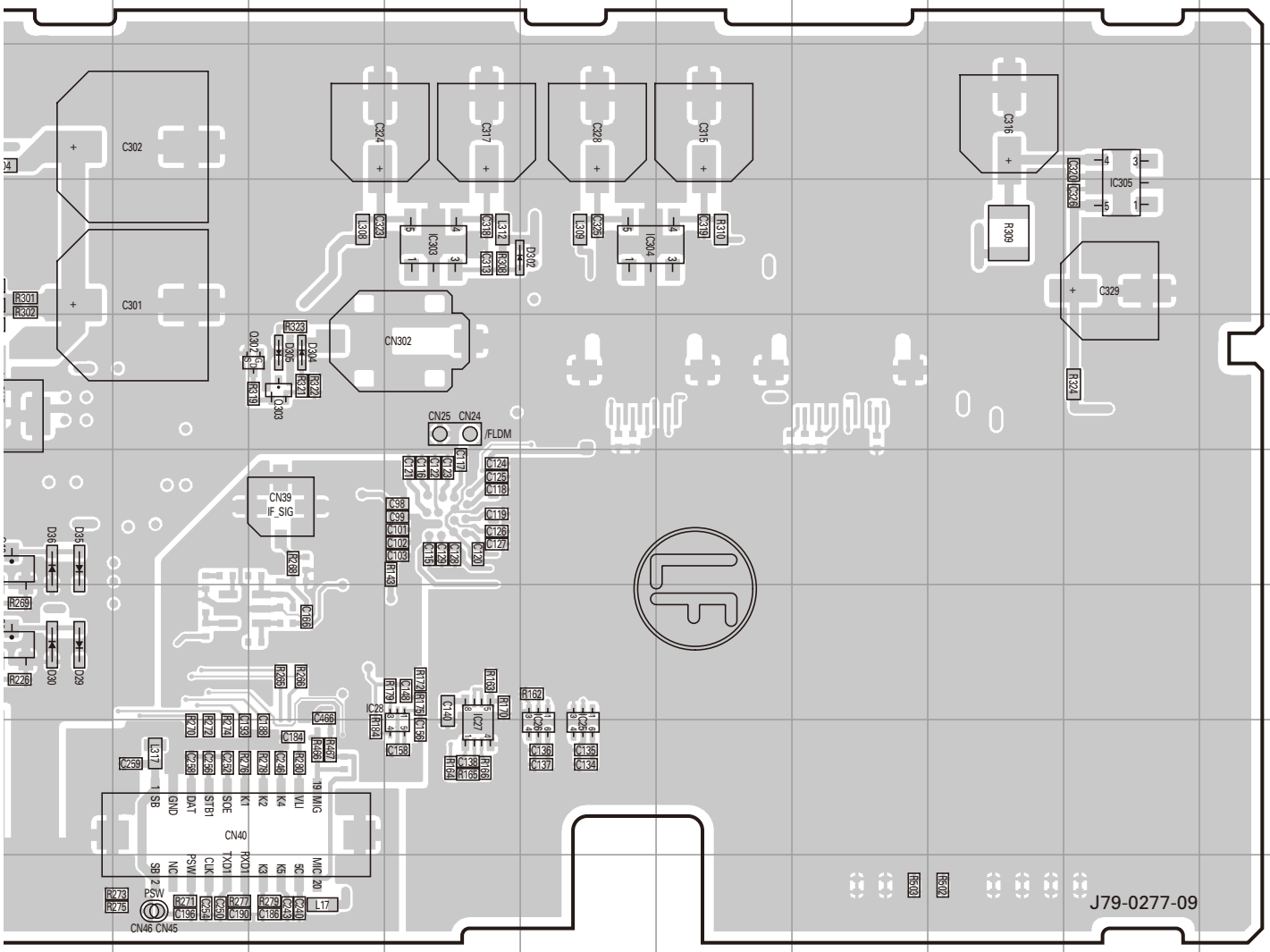

Component side

Layer 1	
Layer 2	
Layer 3	
Layer 4	
Layer 5	
Layer 6	

Foil side

NXR-810 PC BOARD

CONTROL UNIT (X53-4490-10)
Foil side view (J79-0277-09)

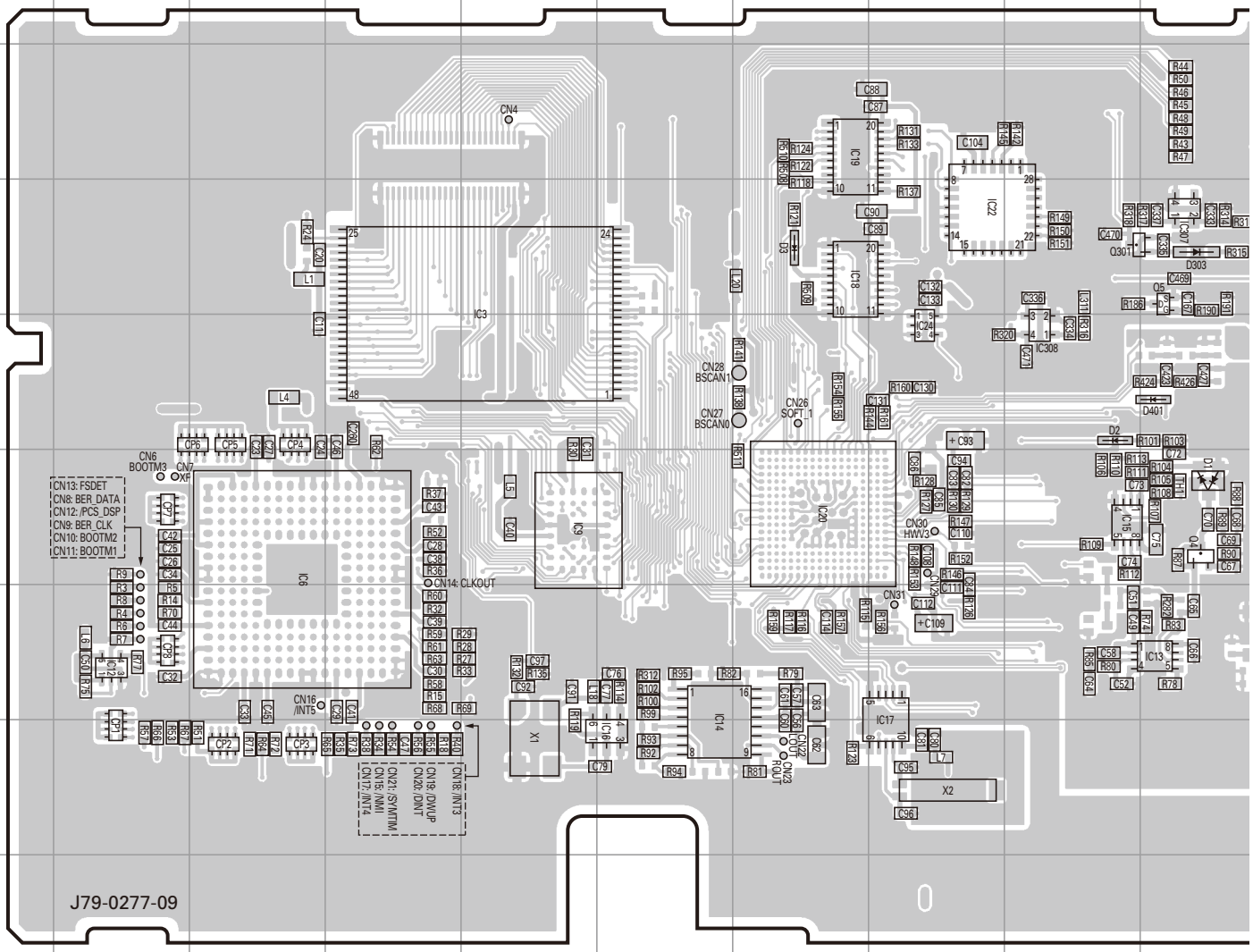

Ref. No.	Address	Ref. No.	Address	Ref. No.	Address	Ref. No.	Address	Ref. No.	Address
IC3	4E	IC13	7J	IC23	5K	IC407	7M	Q405	8Q
IC4	3O	IC14	8F	IC24	5H	IC411	6M	D1	6J
IC5	4O	IC15	6I	IC301	3L	IC412	5O	D2	5I
IC6	6C	IC16	8F	IC307	4J	Q4	6J	D3	4G
IC7	3N	IC17	8H	IC308	5I	Q5	4J	D301	4M
IC8	4N	IC18	4G	IC401	7N	Q301	4I	D303	4J
IC9	6E	IC19	3G	IC402	7N	Q401	7O	D401	5J
IC10	3M	IC20	6G	IC404	7L	Q402	8O		
IC11	4M	IC21	5K	IC405	5Q	Q403	8P		
IC12	7B	IC22	4H	IC406	5M	Q404	8N		

PC BOARD NXR-810

CONTROL UNIT (X53-4490-10)
Foil side view (J79-0277-09)

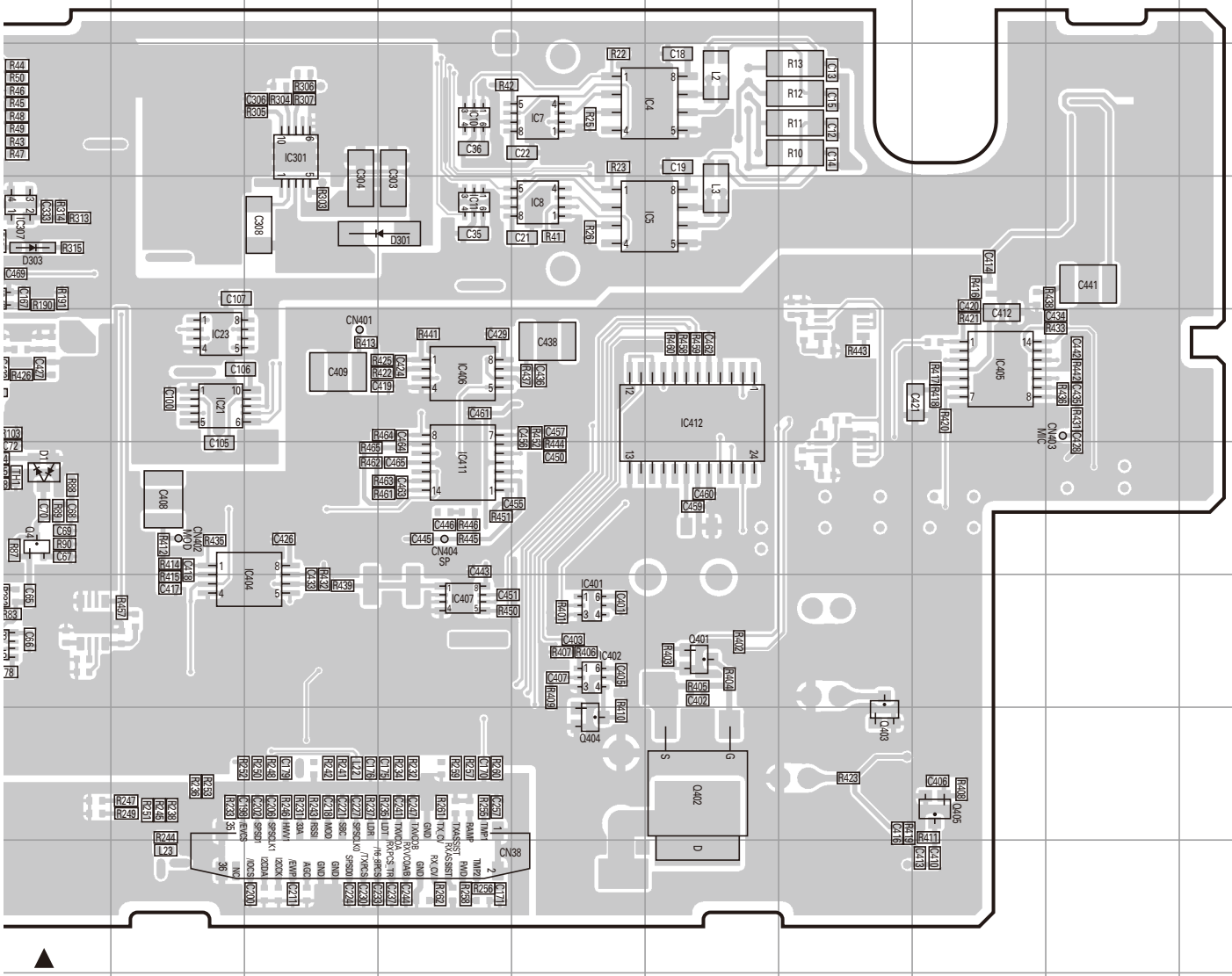

Component side

Layer 1
Layer 2
Layer 3
Layer 4
Layer 5
Layer 6

Foil side

NXR-810 PC BOARD

DISPLAY UNIT (X54-3730-20) Component side view (J79-0295-09)

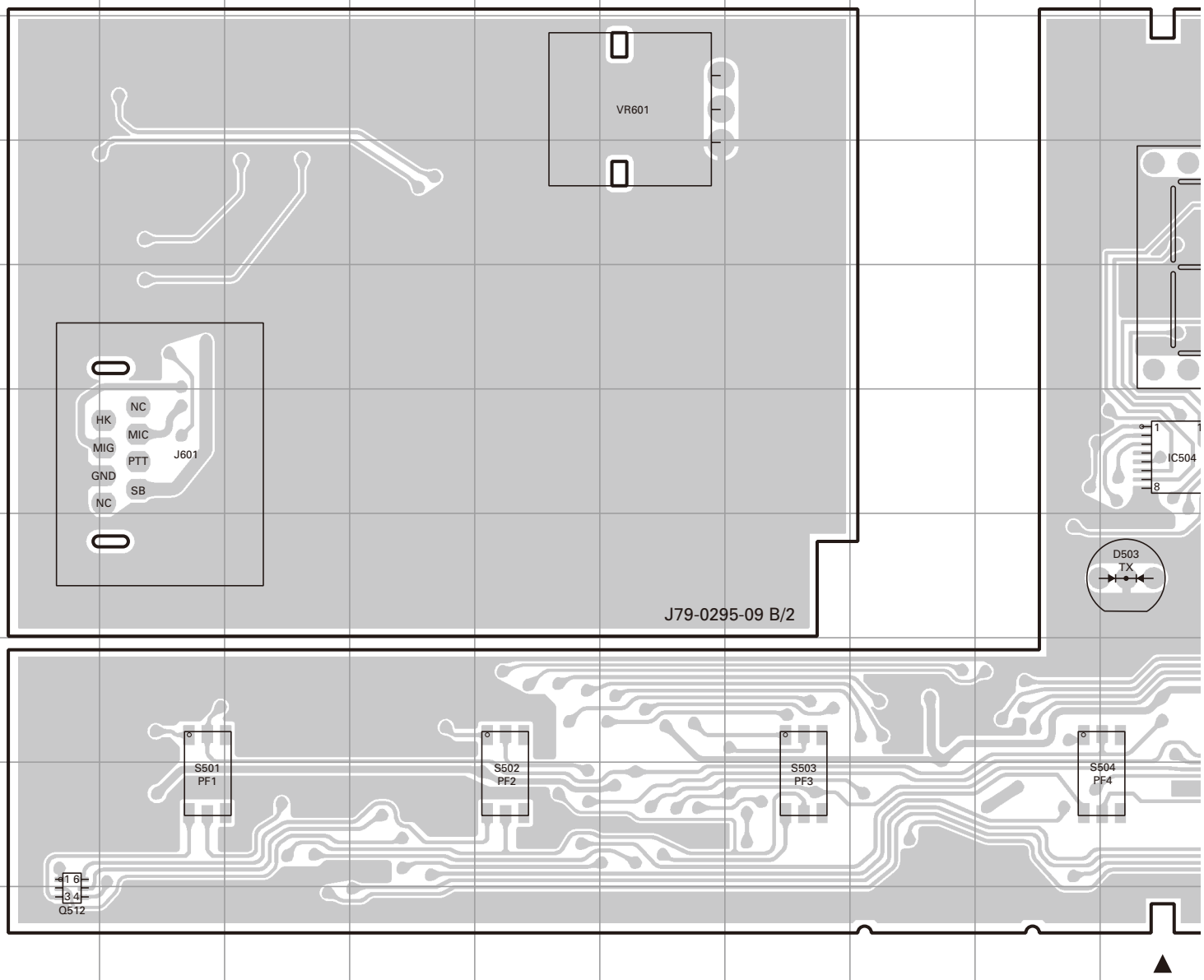

DISPLAY UNIT (X54-3730-20) Component side view (J79-0295-09)

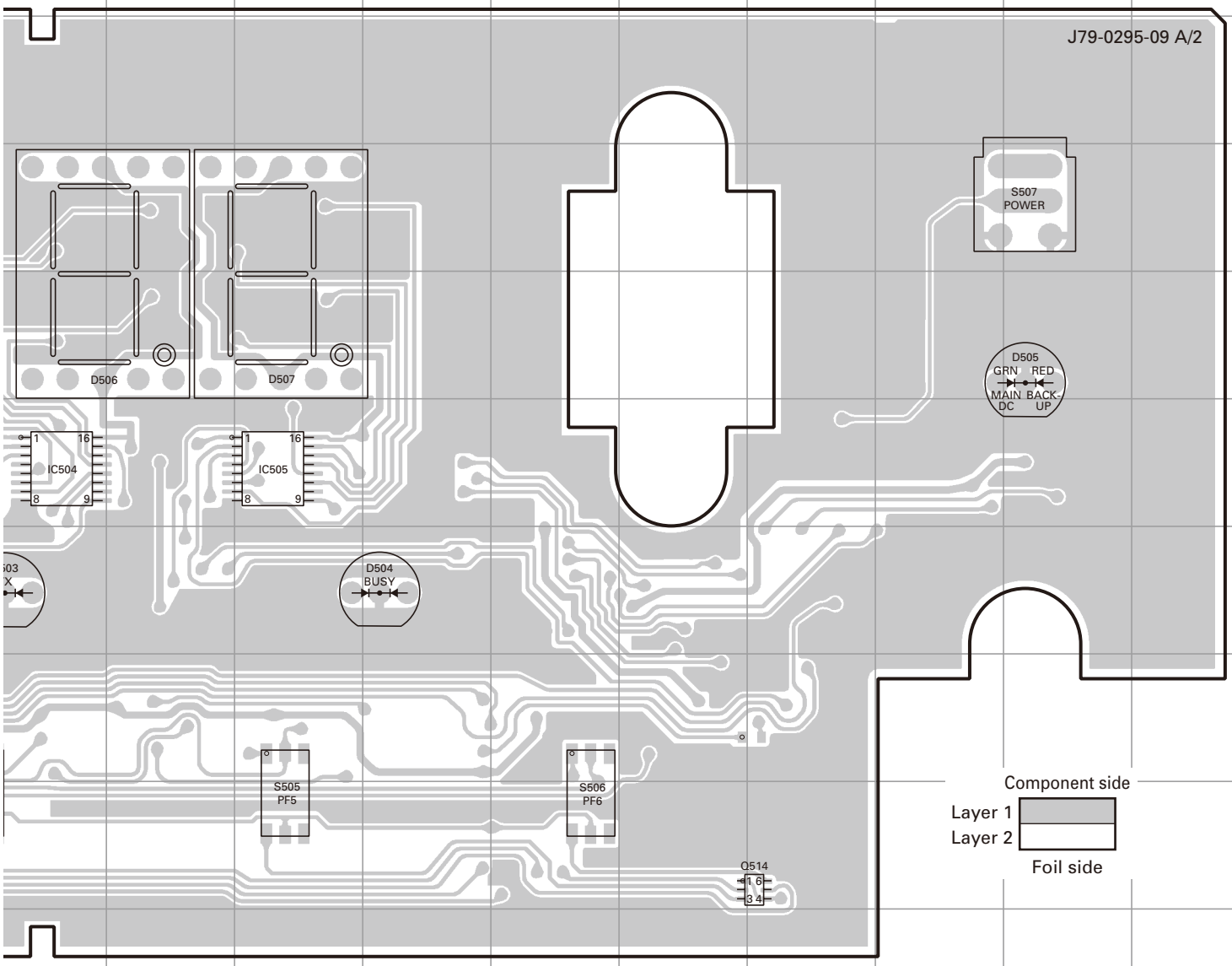

Ref. No.	Address
IC504	6J
IC505	6L
Q512	10A
Q514	9P
D503	7J
D504	7M
D505	5R
D506	5J
D507	5L

NXR-810 PC BOARD

DISPLAY UNIT (X54-3730-20) Foil side view (J79-0295-09)

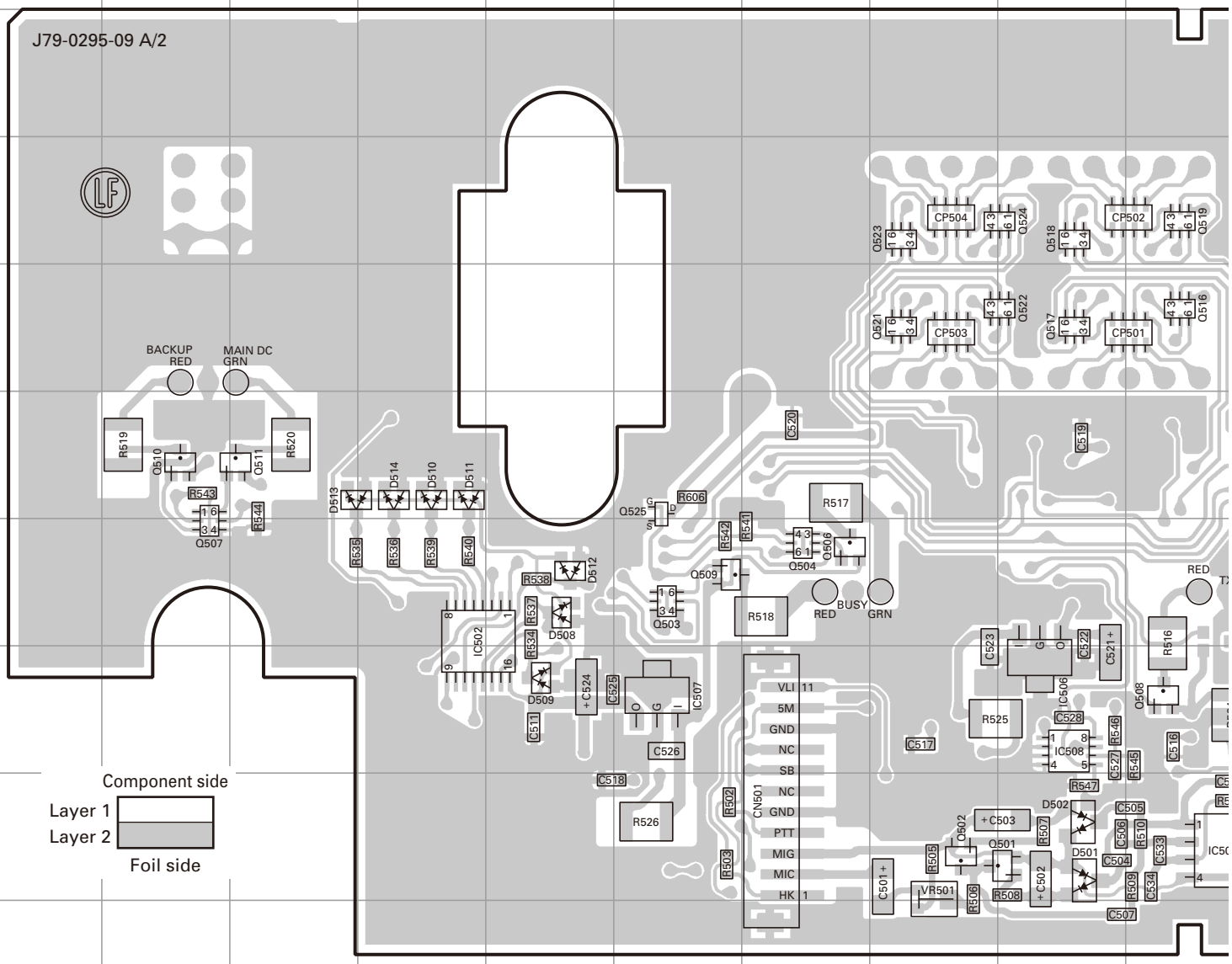

Component side
Layer 1
Layer 2
Foil side

Ref. No.	Address	Ref. No.	Address	Ref. No.	Address	Ref. No.	Address
IC501	9J	Q506	7G	Q519	4J	D510	6D
IC502	7D	Q507	7B	Q521	5H	D511	6D
IC503	9P	Q508	8J	Q522	5I	D512	7E
IC506	8I	Q509	7F	Q523	4H	D513	6C
IC507	8F	Q510	6B	Q524	4I	D514	6D
IC508	8I	Q511	6C	Q525	6F	D601	5R
Q501	9I	Q513	9N	D501	9I	D602	4R
Q502	9H	Q516	5J	D502	9I	D603	4R
Q503	7F	Q517	5I	D508	7E		
Q504	7G	Q518	4I	D509	8E		

DISPLAY UNIT (X54-3730-20) Foil side view (J79-0295-09)

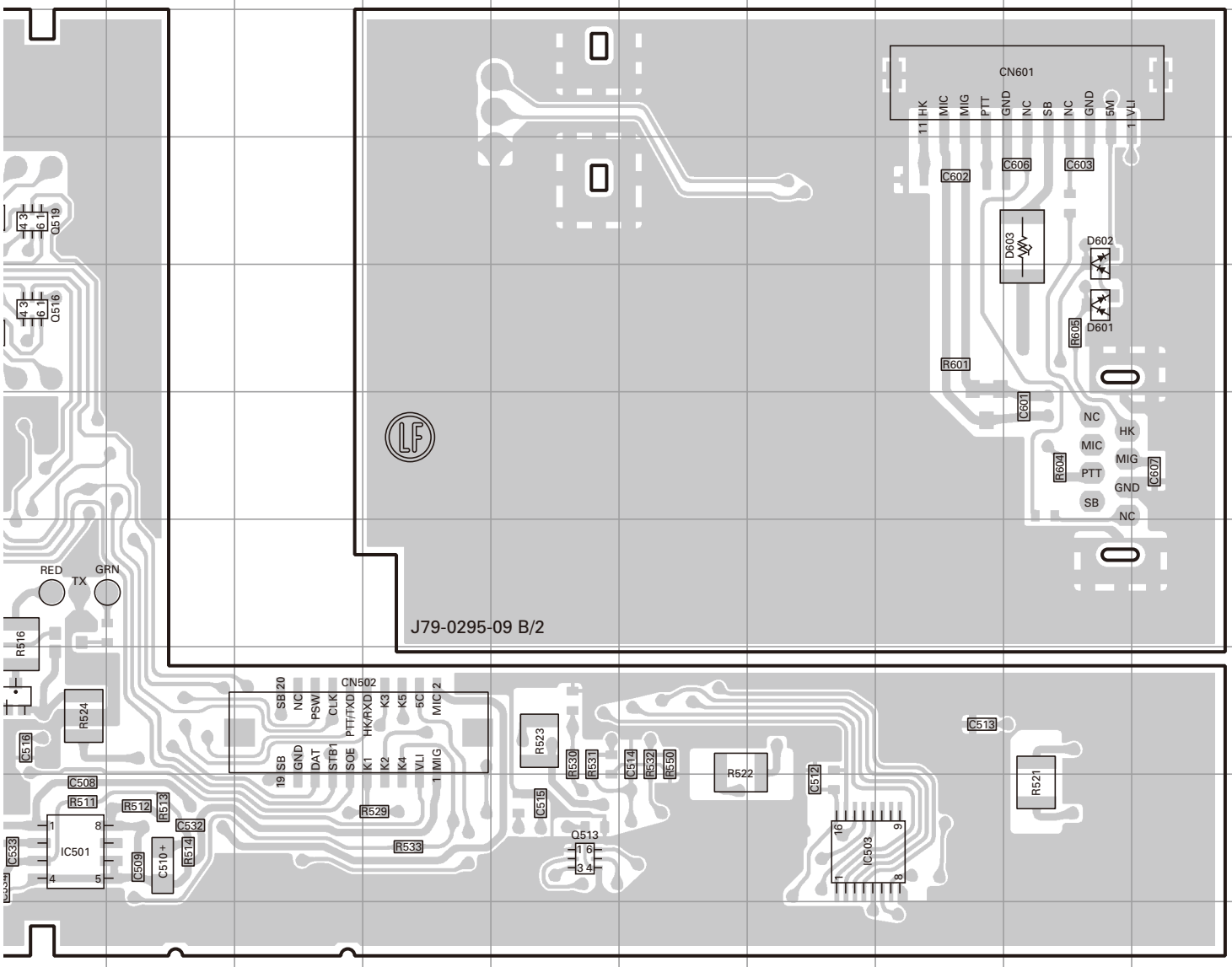

NXR-810 PC BOARD

TX-RX UNIT (X57-7950-XX) -10: K2 -11: K
Component side view (J79-0266-19)

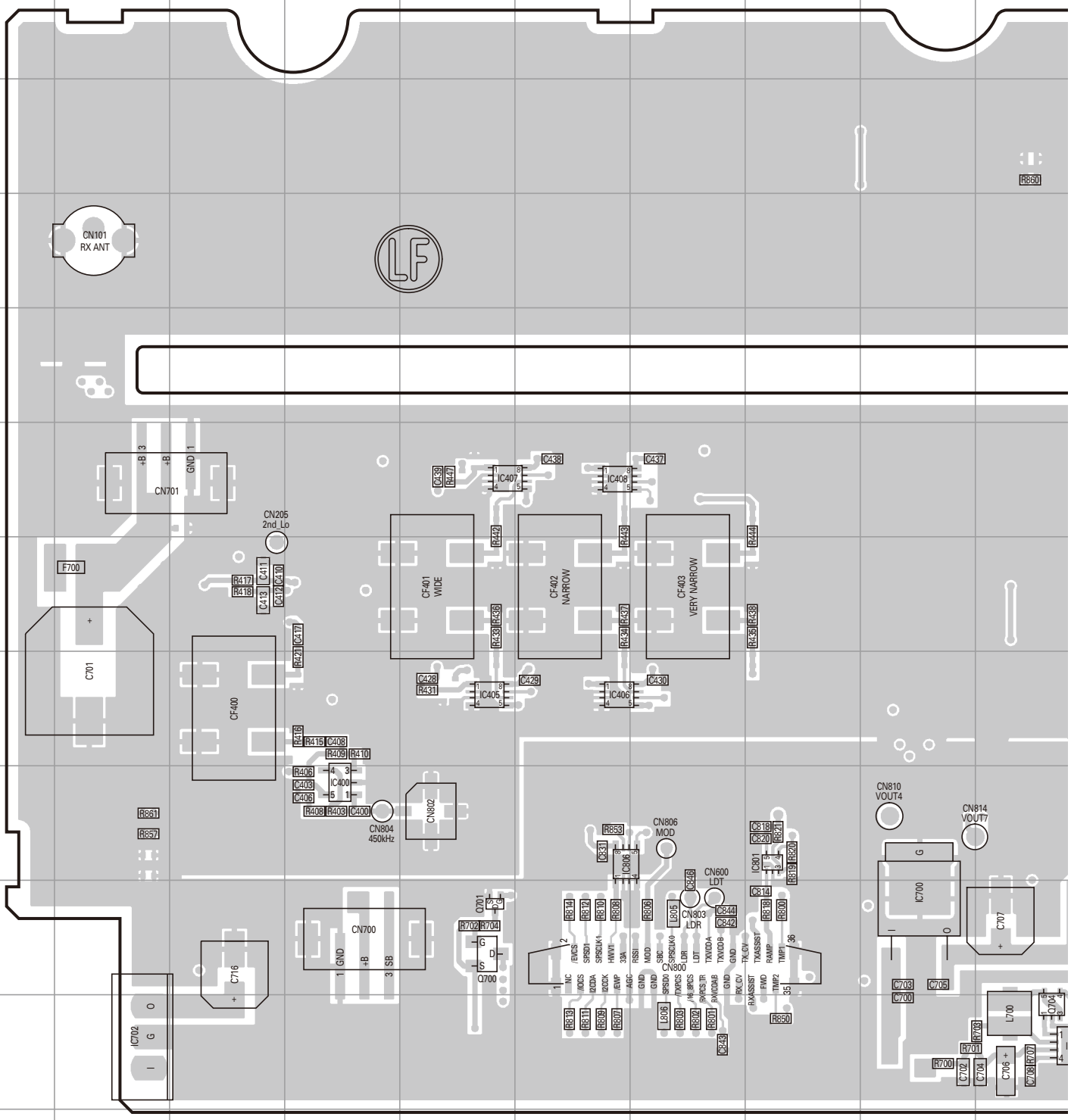

Ref. No.	Address	Ref. No.	Address	Ref. No.	Address	Ref. No.	Address
IC203	9M	IC603	6O	IC701	11J	Q701	10E
IC400	9D	IC604	6P	IC702	11B	Q704	11J
IC405	8E	IC605	6M	IC703	10K	Q705	10K
IC406	8F	IC606	5M	IC801	9H	Q706	9K
IC407	6E	IC608	5M	IC806	9F		
IC408	6F	IC700	10I	Q700	10E		

PC BOARD NXR-810

TX-RX UNIT (X57-7950-XX) -10: K2 -11: K
Component side view (J79-0266-19)

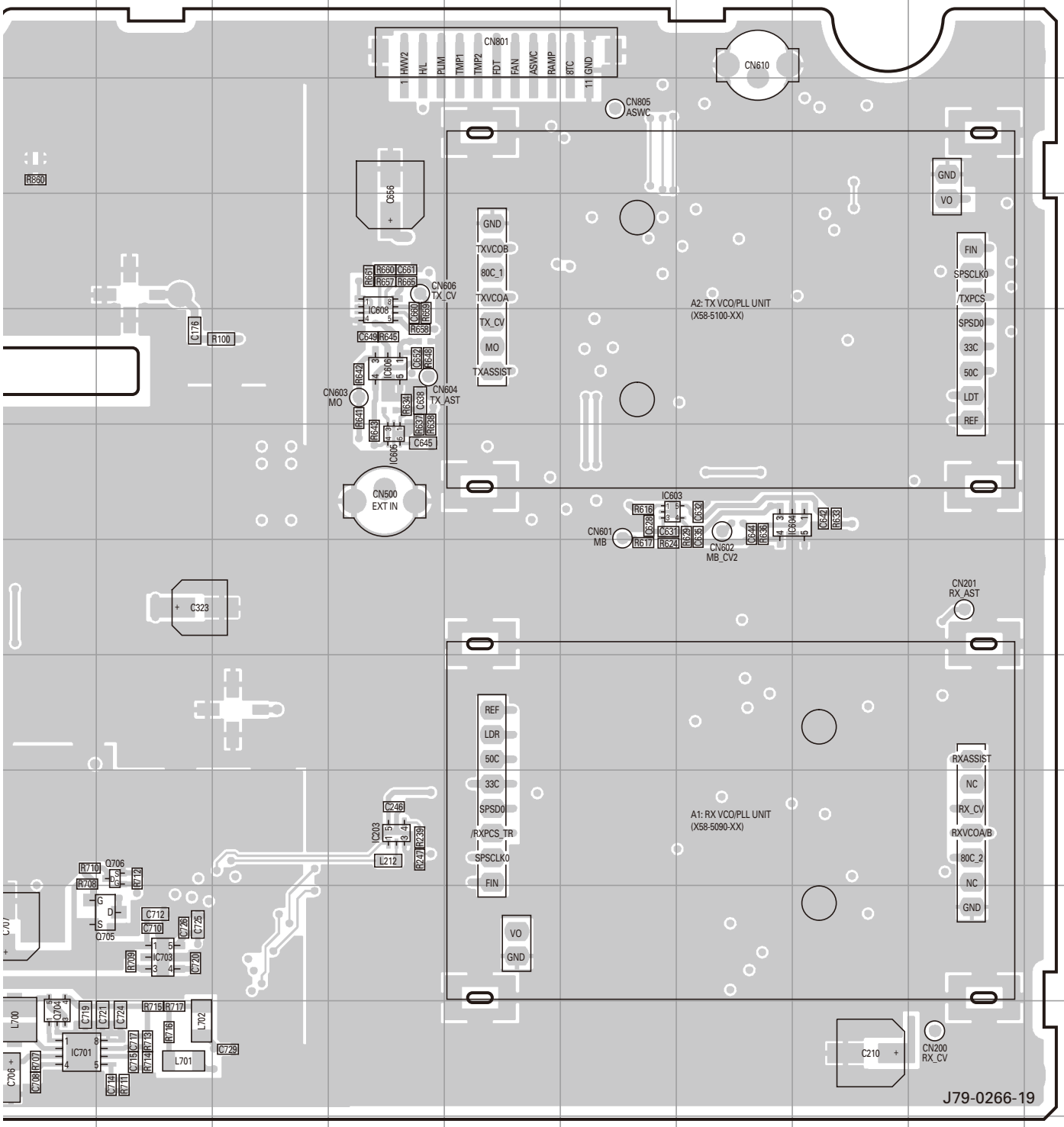

Component side
Layer 1
Layer 2
Layer 3
Layer 4
Foil side

NXR-810 PC BOARD

TX-RX UNIT (X57-7950-XX) -10: K2 -11: K

Foil side view (J79-0266-19)

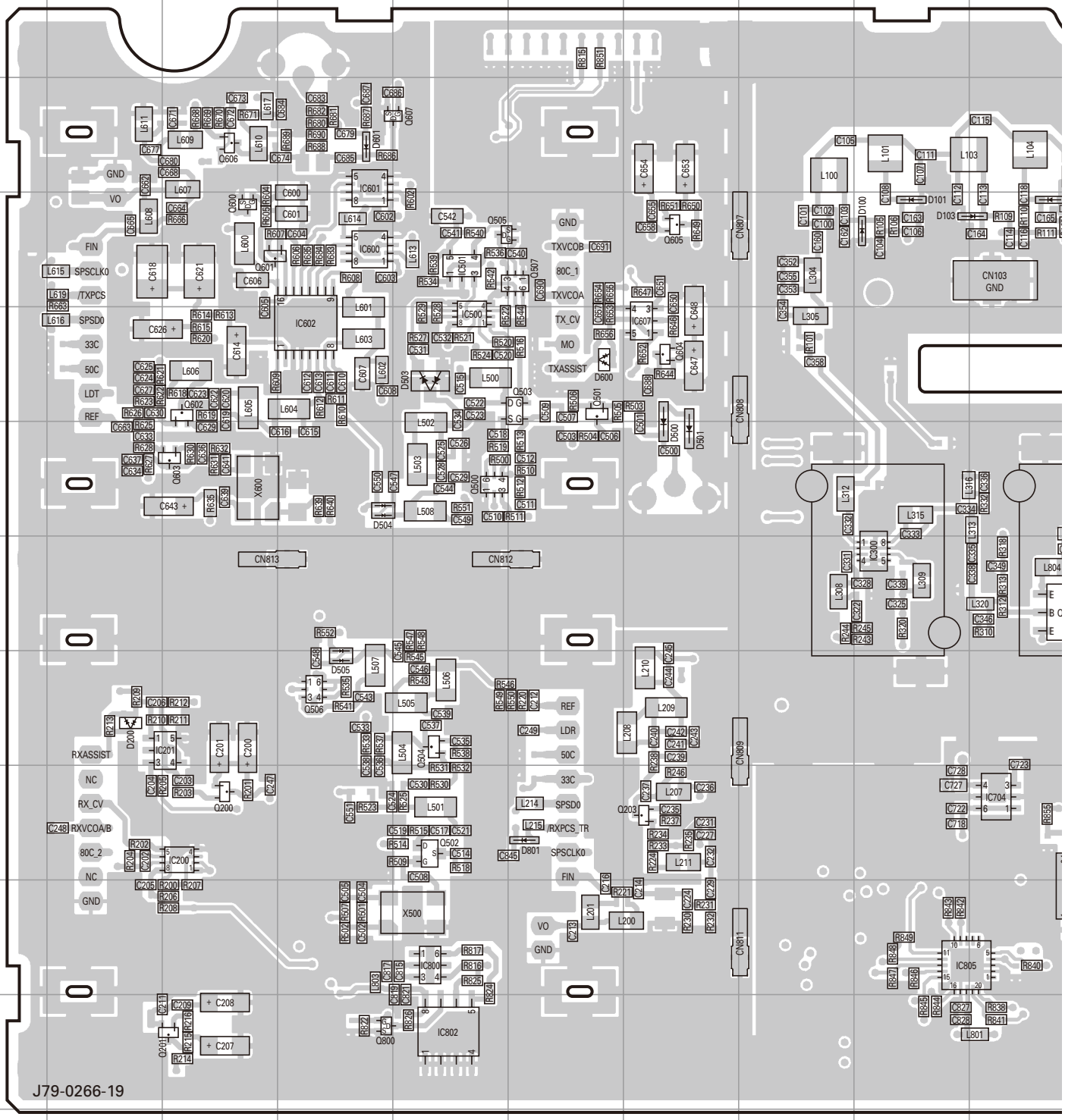

Ref. No.	Address	Ref. No.	Address	Ref. No.	Address	Ref. No.	Address	Ref. No.	Address	Ref. No.	Address	Ref. No.	Address	Ref. No
IC100	4P	IC402	8P	IC600	4D	IC802	11E	Q200	9C	Q500	6E	Q506	8D	Q604
IC101	4O	IC403	7P	IC601	3D	IC803	10L	Q201	11C	Q501	5F	Q507	4F	Q605
IC200	9C	IC404	8O	IC602	5D	IC804	10K	Q202	6P	Q502	9E	Q600	4C	Q606
IC201	8C	IC409	7Q	IC607	5G	IC805	10I	Q203	9G	Q503	5F	Q601	4C	Q607
IC300	7I	IC500	5E	IC704	9J	Q100	4Q	Q300	7O	Q504	8E	Q602	5C	Q702
IC401	8Q	IC501	4E	IC800	10E	Q101	3K	Q301	7J	Q505	4E	Q603	6C	Q703

PC BOARD NXR-810

TX-RX UNIT (X57-7950-XX) -10: K2 -11: K
Foil side view (J79-0266-19)

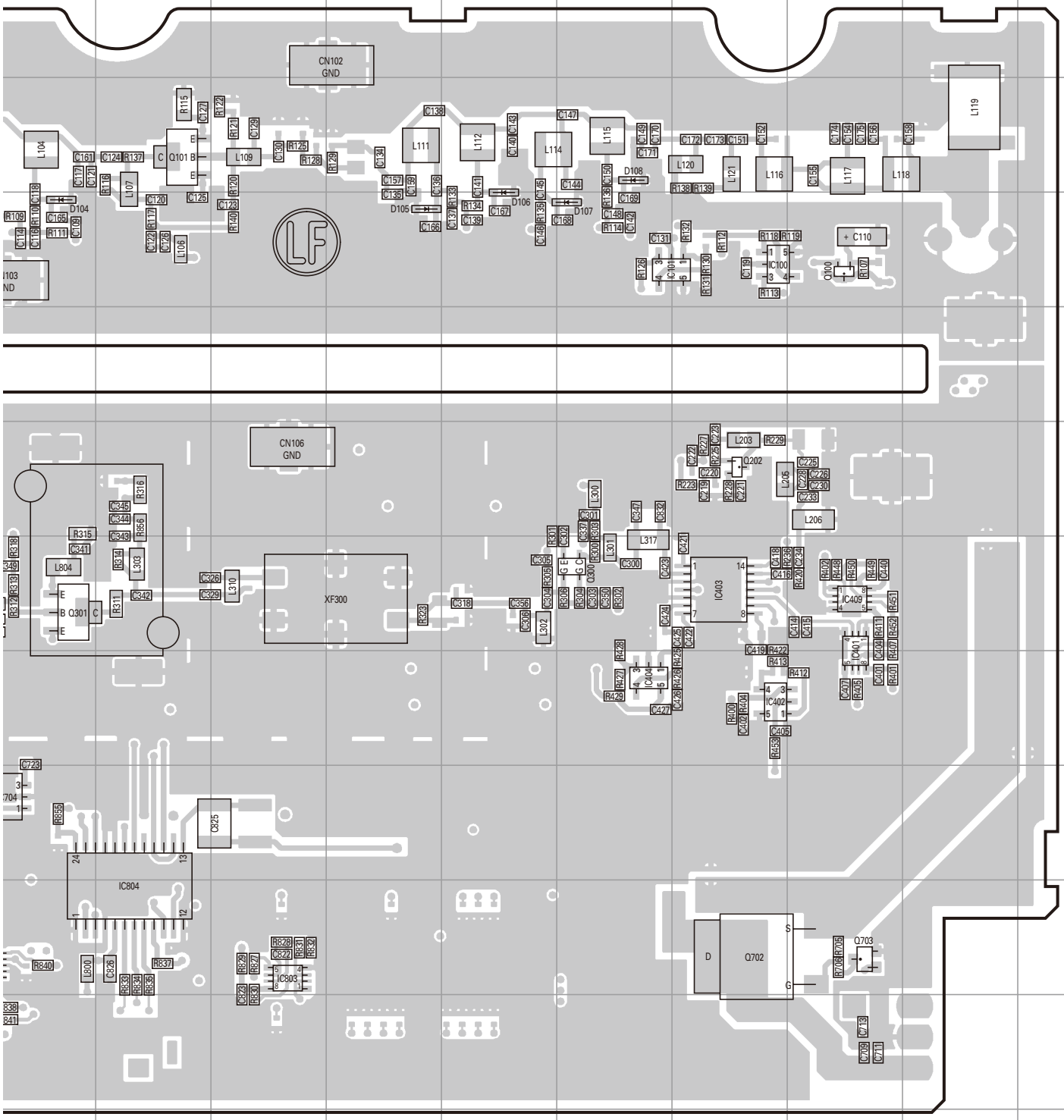

Ref. No.	Address	Ref. No.	Address	Ref. No.	Address	Ref. No.	Address
Q604	5G	Q800	11D	D106	4N	D503	5E
Q605	4G	D100	4I	D107	4O	D504	6D
Q606	3C	D101	4I	D108	3O	D505	8D
Q607	3E	D103	4I	D200	8B	D600	5F
Q702	10P	D104	4J	D500	6G	D601	3D
Q703	10Q	D105	4M	D501	6G	D801	9F

Component side
Layer 1
Layer 2
Layer 3
Layer 4
Foil side

NXR-810 PC BOARD

RX VCO/PLL UNIT (X58-5090-XX)
-10: K2 -11: K
Component side view (J79-0269-09)

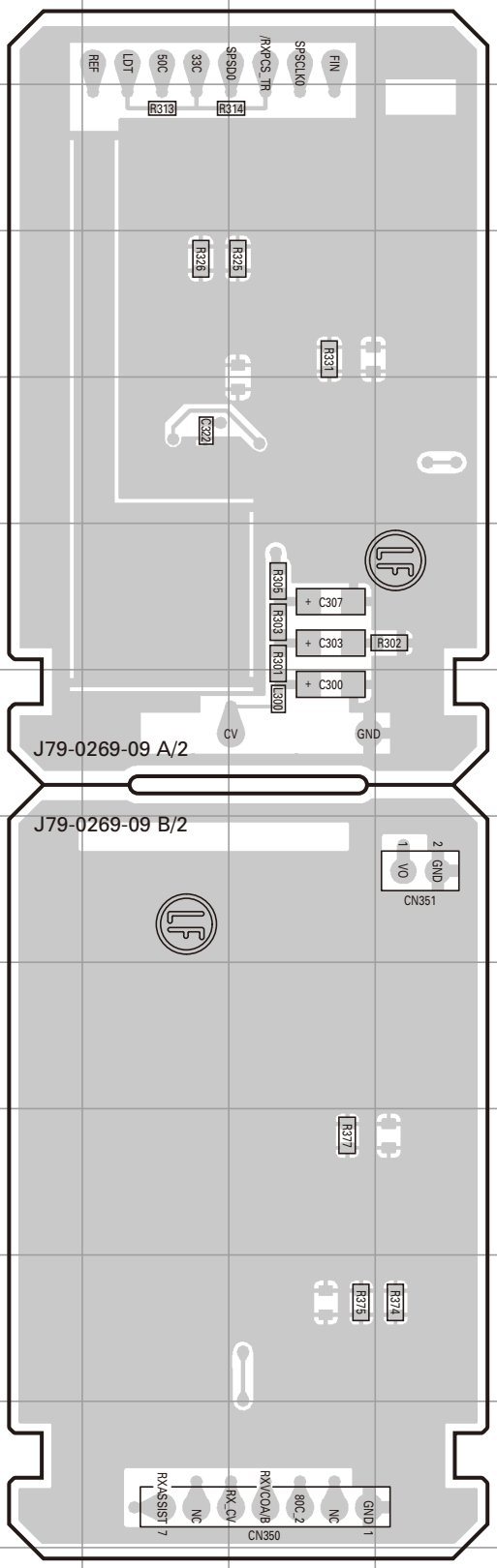

RX VCO/PLL UNIT (X58-5090-XX)
-10: K2 -11: K
Foil side view (J79-0269-09)

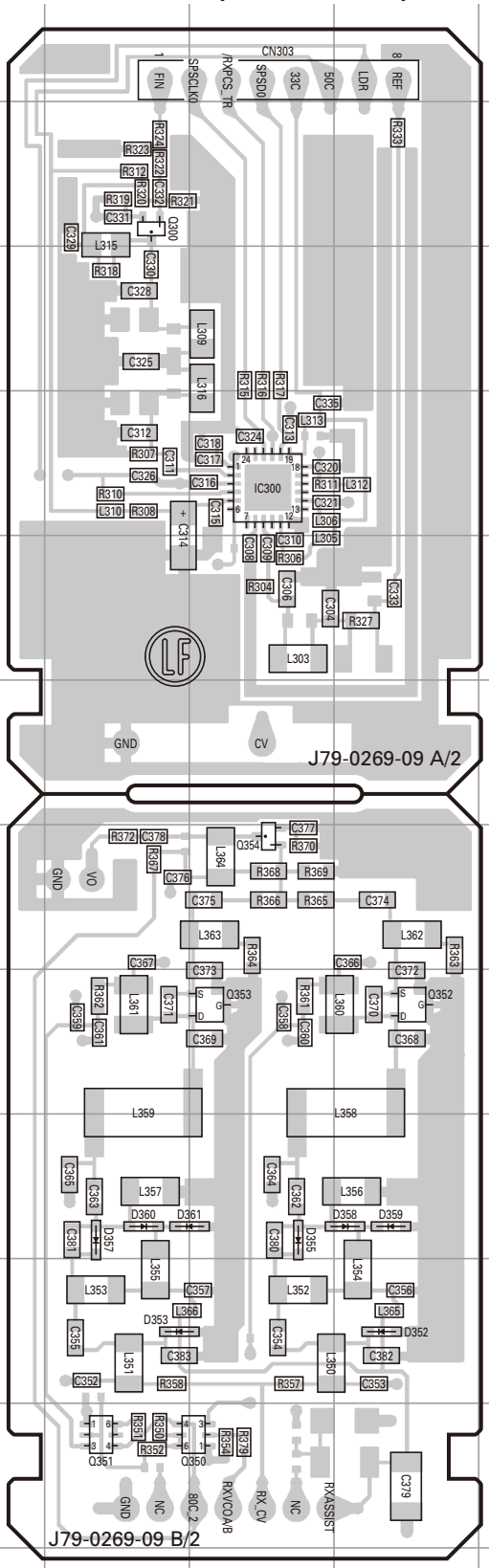

Ref. No.	Address
IC300	5G
Q300	3F
Q350	12G
Q351	12F
Q352	9H
Q353	9G
Q354	8G
D352	11H
D353	11F
D355	10G
D357	10F
D358	10H
D359	10H
D360	10F
D361	10G

Component side
Layer 1
Layer 2
Foil side

Component side
Layer 1
Layer 2
Foil side

TX VCO/PLL UNIT (X58-5100-XX)
-10: K2 -11: K
Component side view (J79-0270-09)

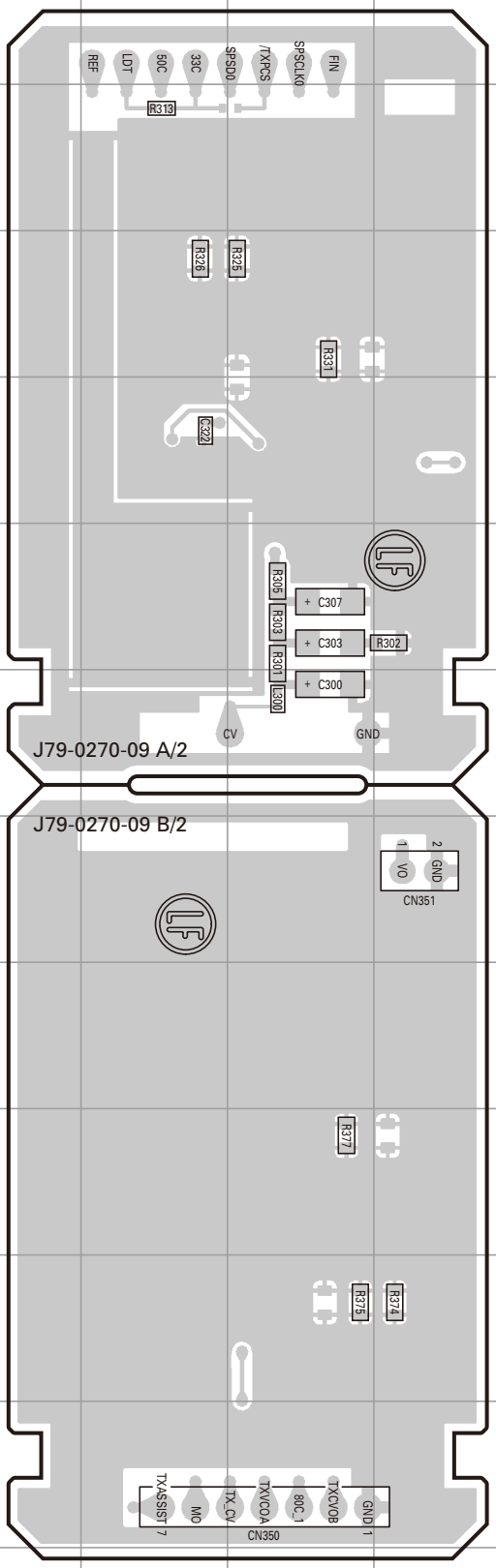

TX VCO/PLL UNIT (X58-5100-XX)
-10: K2 -11: K
Foil side view (J79-0270-09)

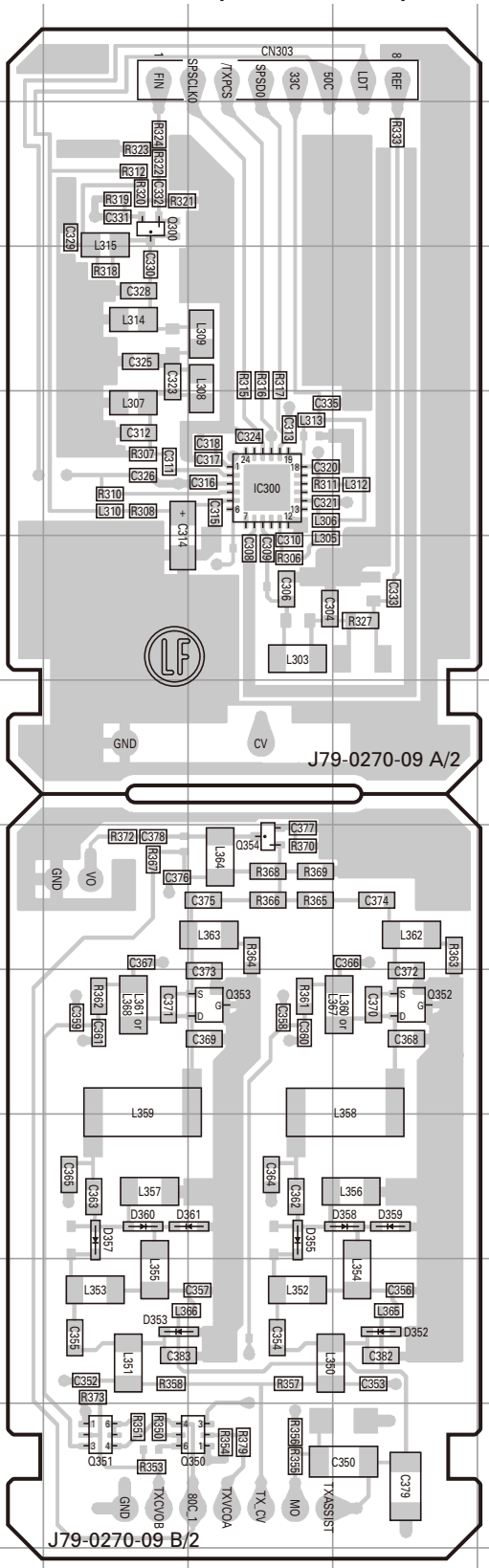

Ref. No.	Address
IC300	5G
Q300	3F
Q350	12G
Q351	12F
Q352	9H
Q353	9G
Q354	8G
D352	11H
D353	11F
D355	10G
D357	10F
D358	10H
D359	10H
D360	10F
D361	10G

Component side
Layer 1
Layer 2
Foil side

Component side
Layer 1
Layer 2
Foil side

NXR-810 INTERCONNECTION DIAGRAM

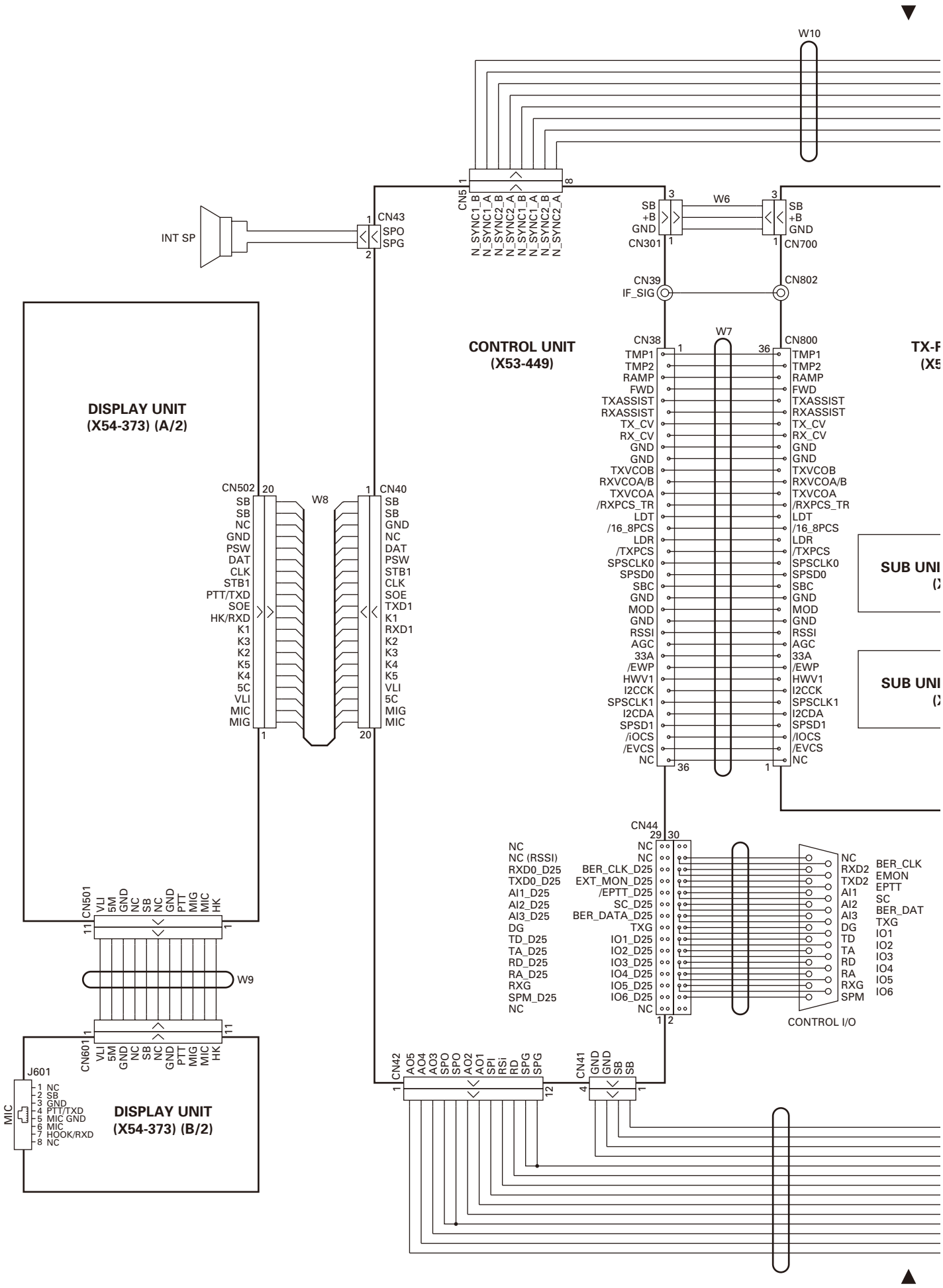

INTERCONNECTION DIAGRAM NXR-810

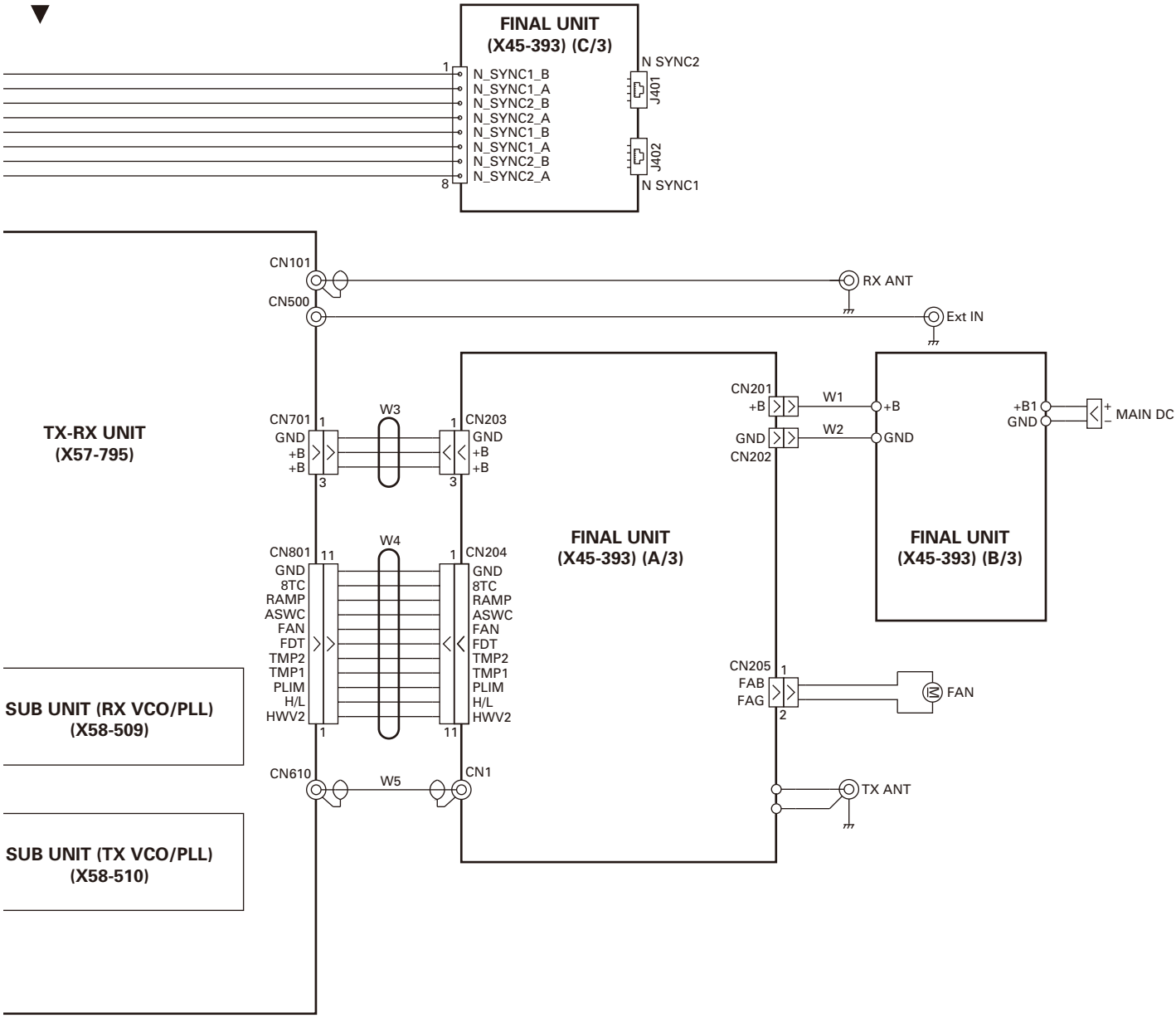

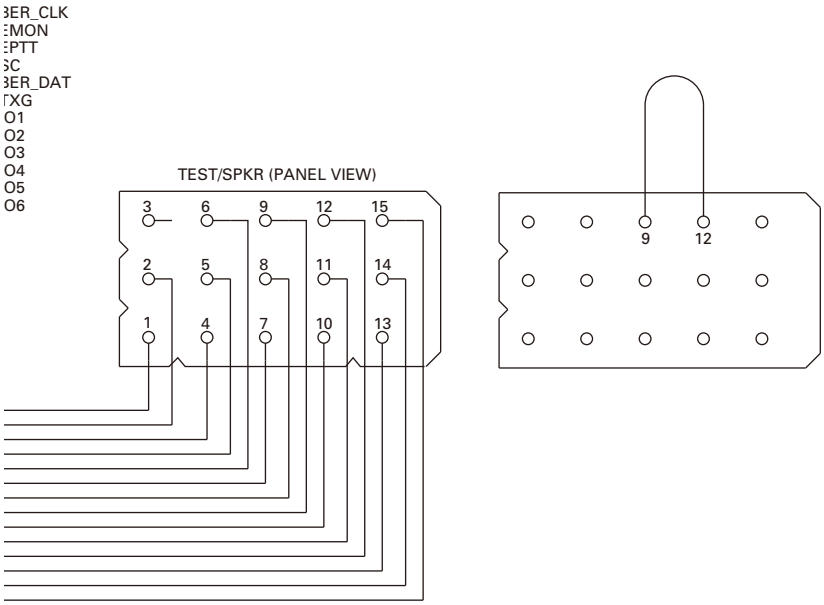

NXR-810 SCHEMATIC DIAGRAM

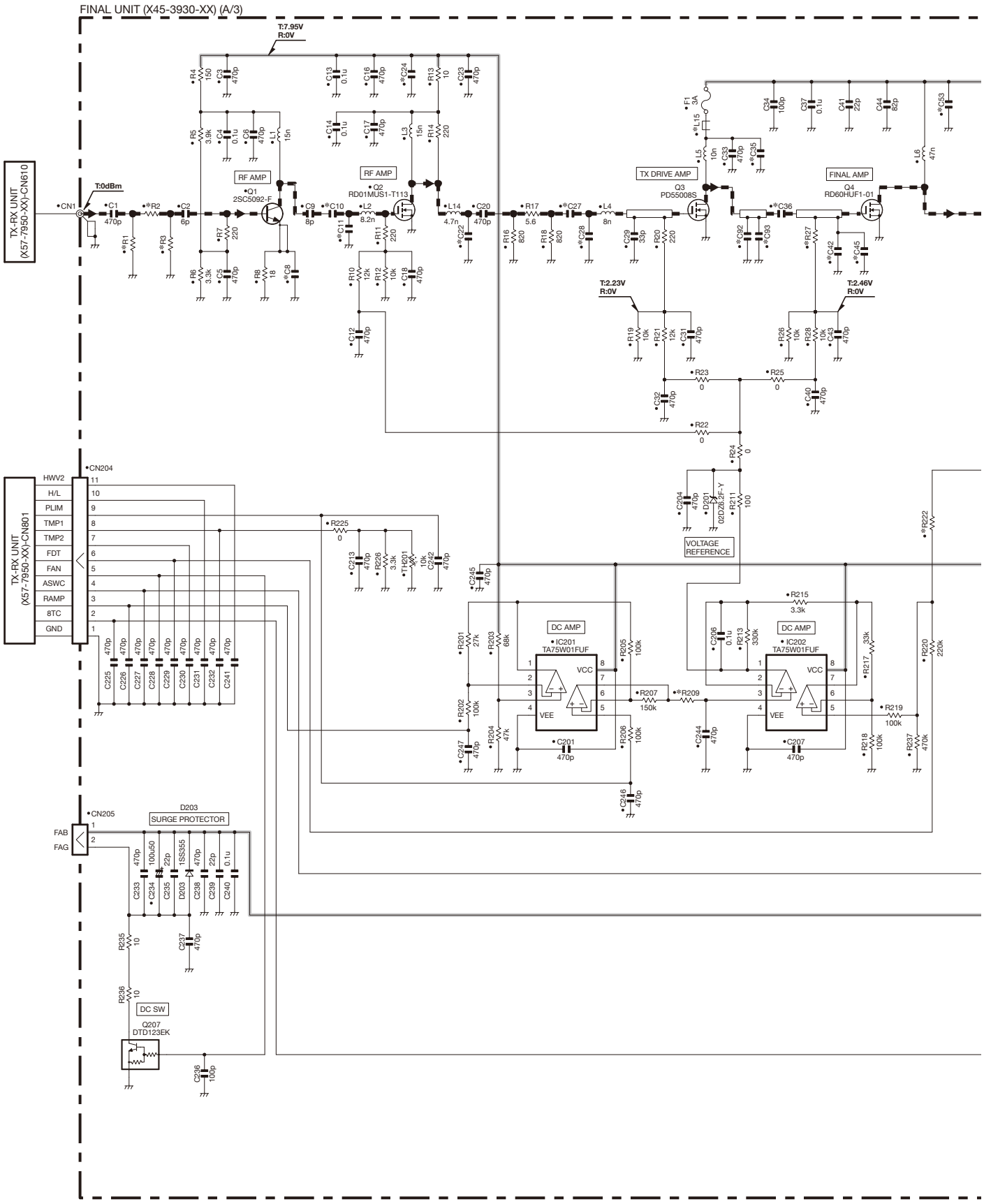

X45-3930-XX (A/3)		C8	C10	C11	C22	C24	C27	C28	C35	C36	C42	C45	C53	C92	C93	L15	R1	R2	R3	R27	R209	R222
-10	K2	470p	12p	NO	12p	NO	6p	6p	NO	39p	39p	39p	NO	15p	NO	NO	180	27	180	100	100k	47k
-11	K	47p	5p(B)	4p(B)	8p(D)	47p	470p	9p	47p	18p	18p	18p	5p	10p	22p	L92-0179-05	270	18	270	220	330k	12k

SCHEMATIC DIAGRAM NXR-810

FINAL UNIT (X45-3930-XX) (A/3)

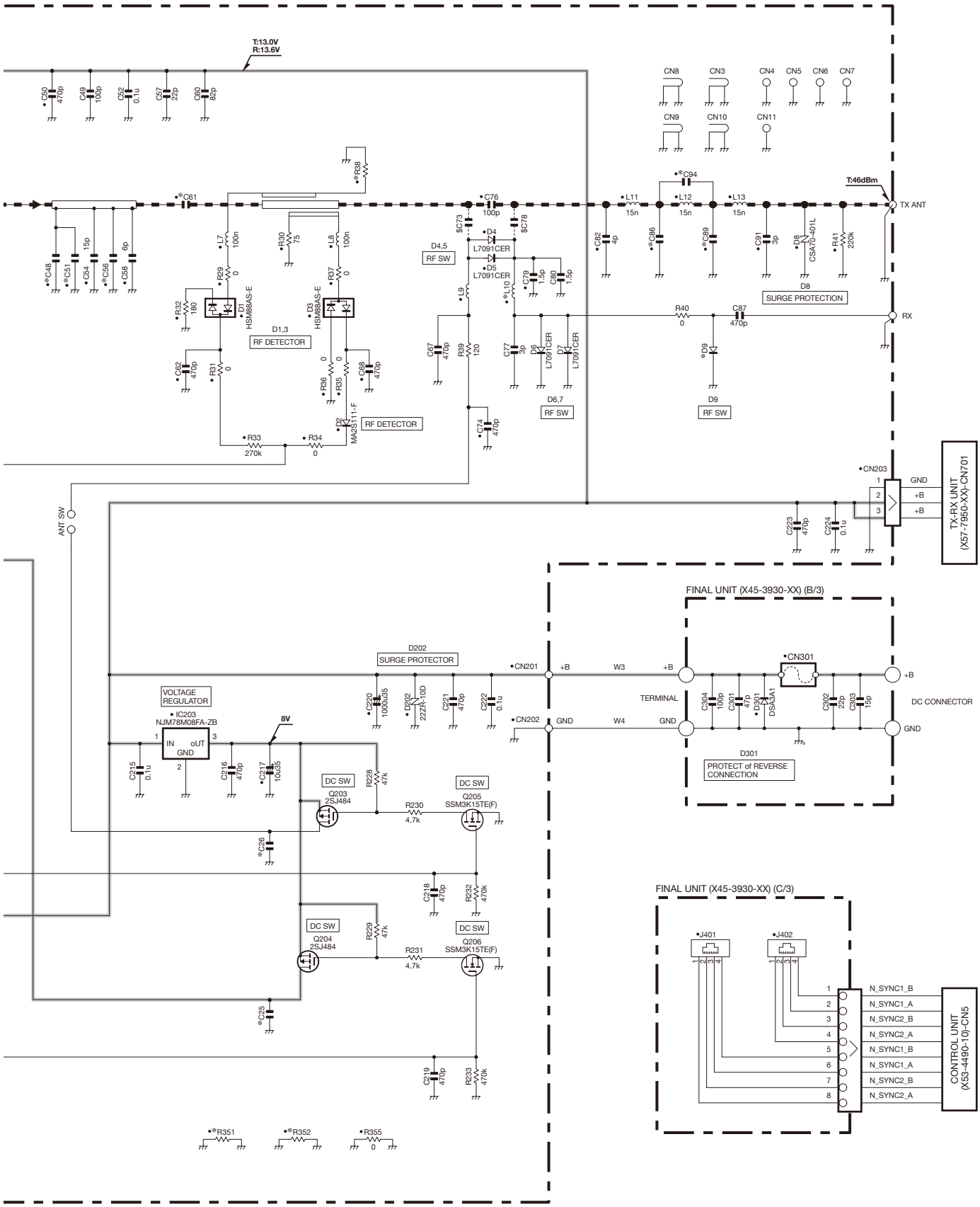

X45-3930-XX (A/3)		D9	C25	C26	C48	C51	C56	C61	C86	C89	C94	L10	R38	R351	R352
-10	K2	NO	NO	NO	30p	27p	10p	100p	9p	10p	NO	L34-4758-05	82	0	NO
-11	K	HVC131	47p	47p	22p	22p	7p	470p	7p	8p	1p	L34-4743-05	75	NO	0

Note : The components marked with a dot (•) are parts of layer 1.

NXR-810 SCHEMATIC DIAGRAM

CONTROL UNIT (X53-4490-10)

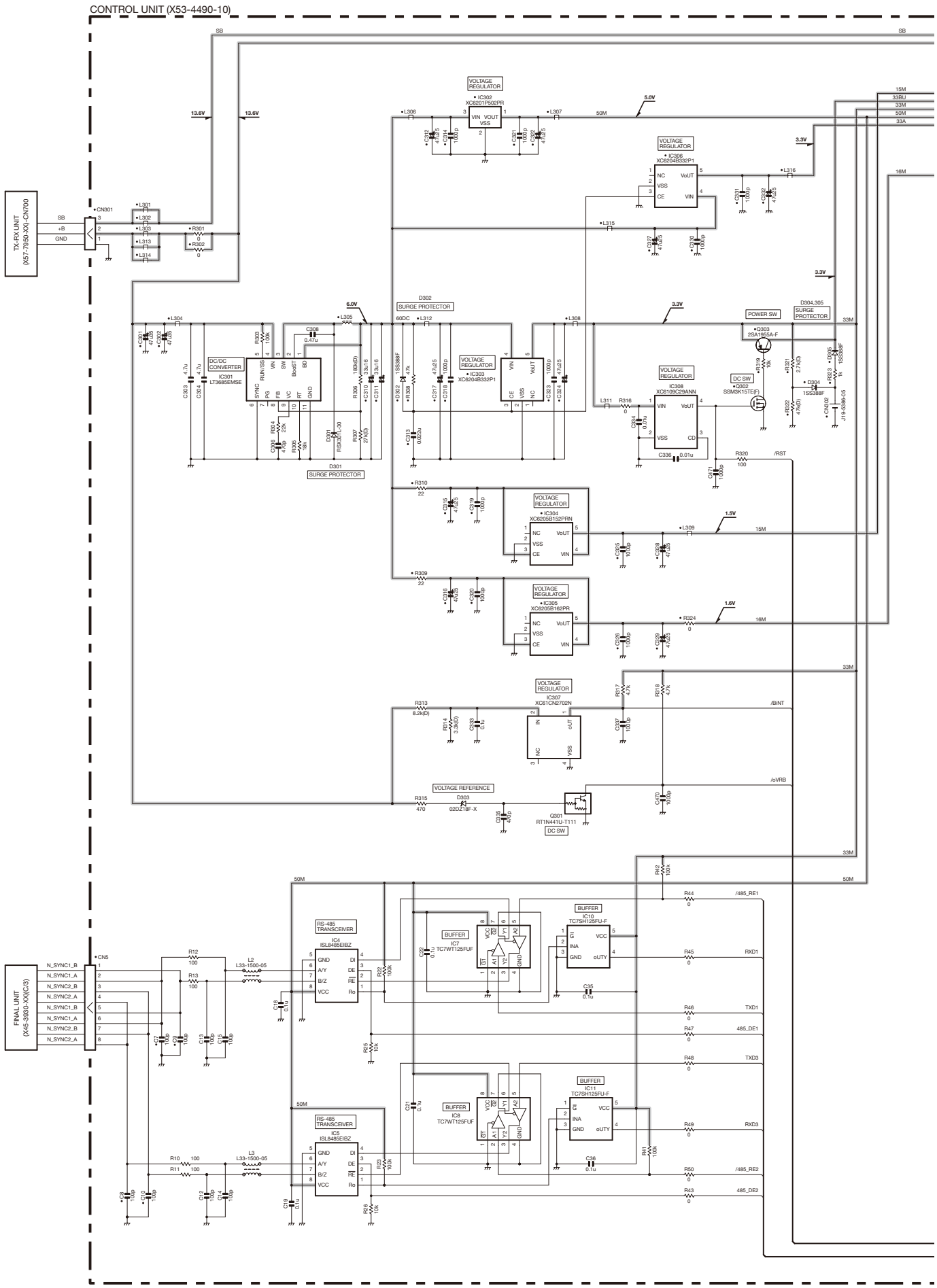

SCHEMATIC DIAGRAM NXR-810

CONTROL UNIT (X53-4490-10)

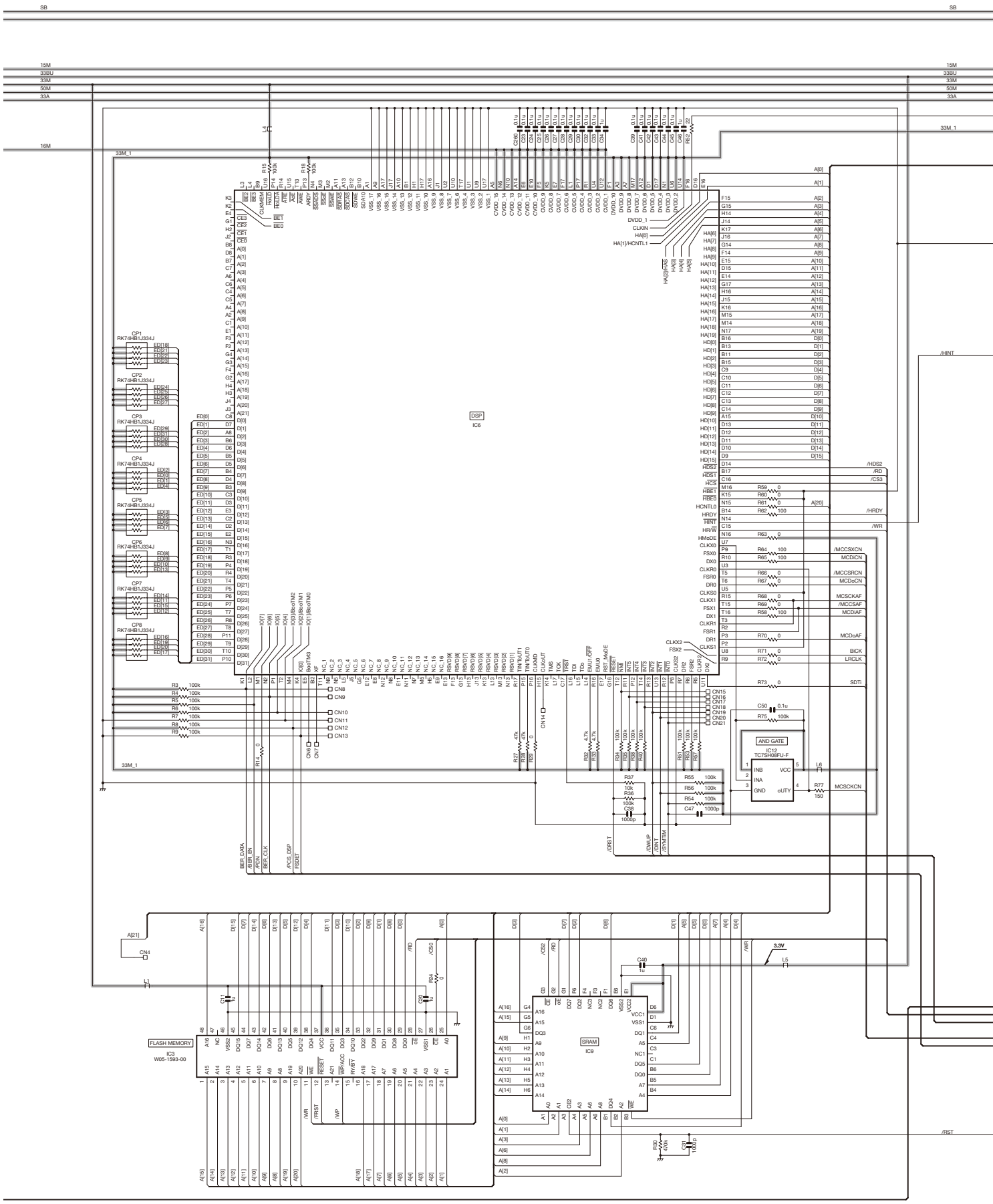

NXR-810 SCHEMATIC DIAGRAM

CONTROL UNIT (X53-4490-10)

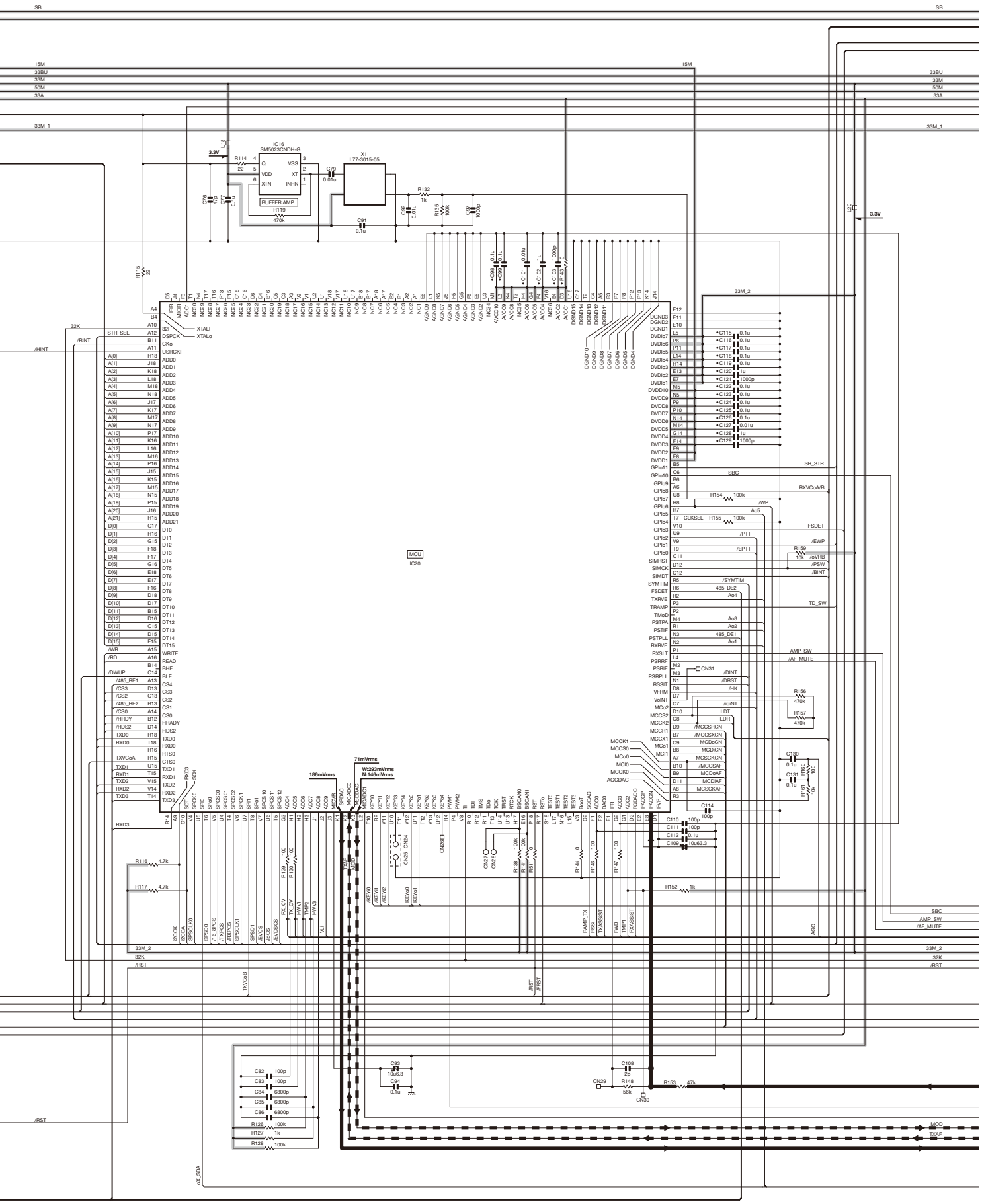

SCHEMATIC DIAGRAM NXR-810

CONTROL UNIT (X53-4490-10)

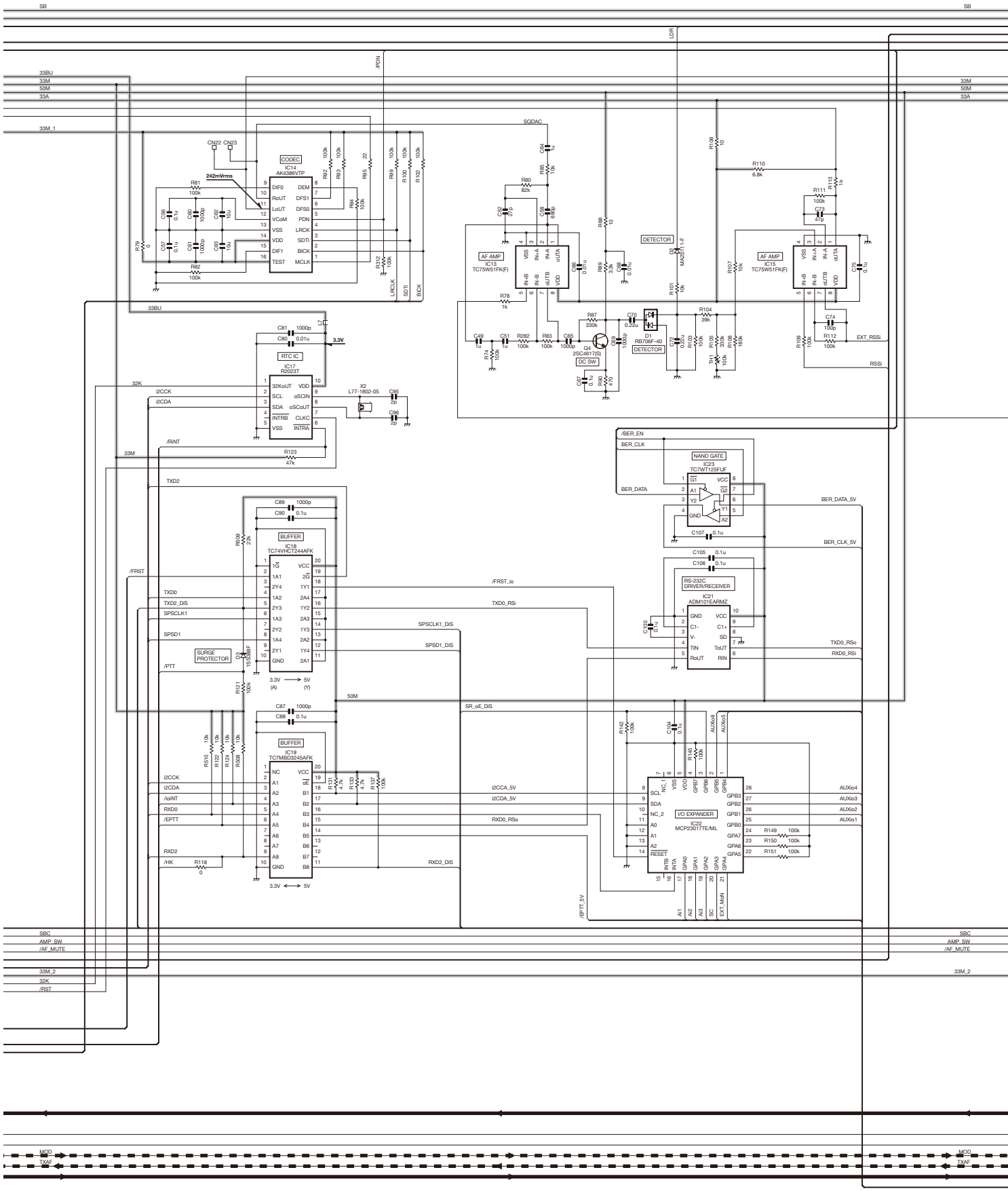

NXR-810 SCHEMATIC DIAGRAM

CONTROL UNIT (X53-4490-10)

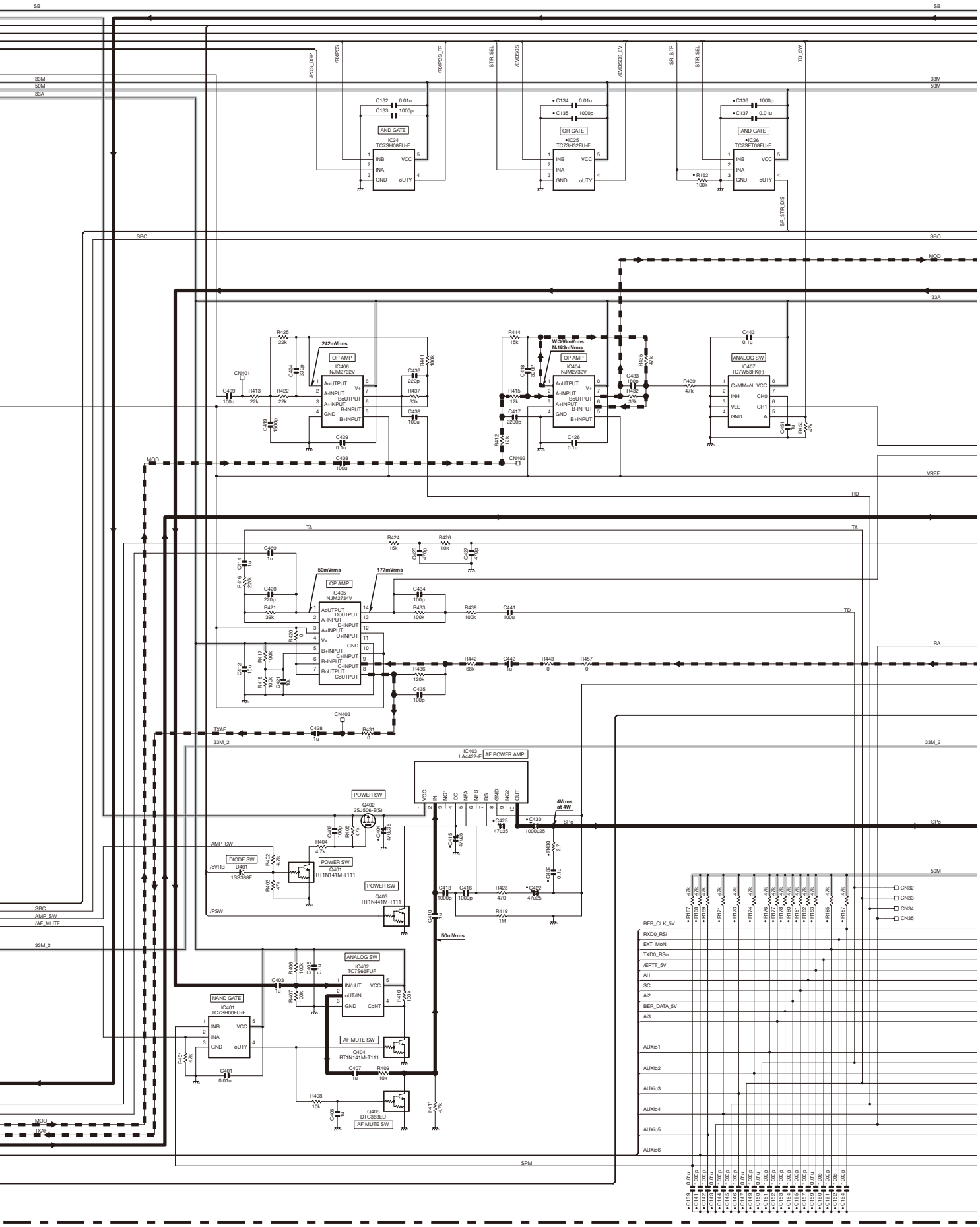

SCHEMATIC DIAGRAM NXR-810

CONTROL UNIT (X53-4490-10)

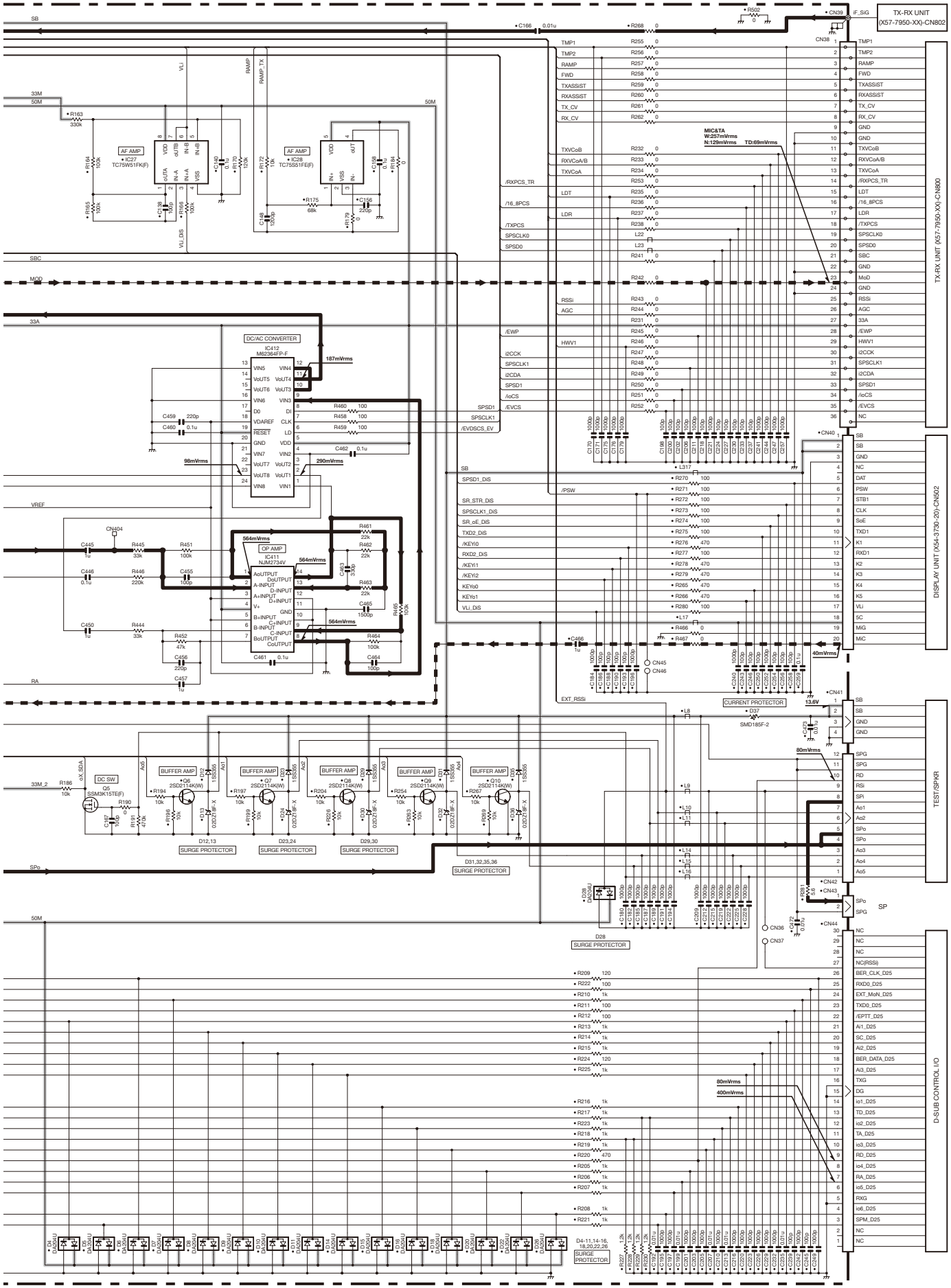

Note : The components marked with a dot (•) are parts of layer 1.

NXR-810 SCHEMATIC DIAGRAM

DISPLAY UNIT (X54-3730-20) (A/2)

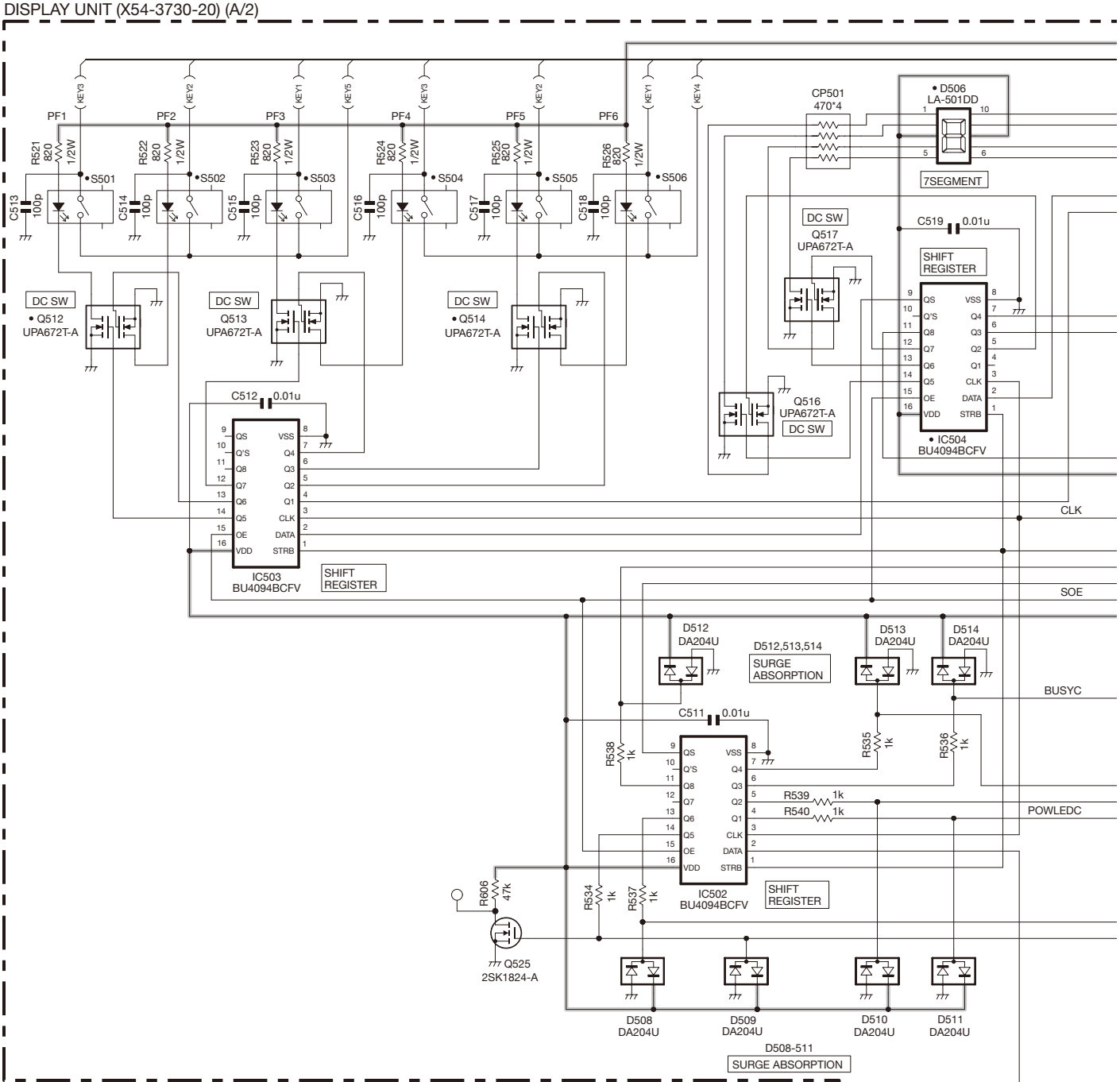

DISPLAY UNIT (X54-3730-20) (B/2)

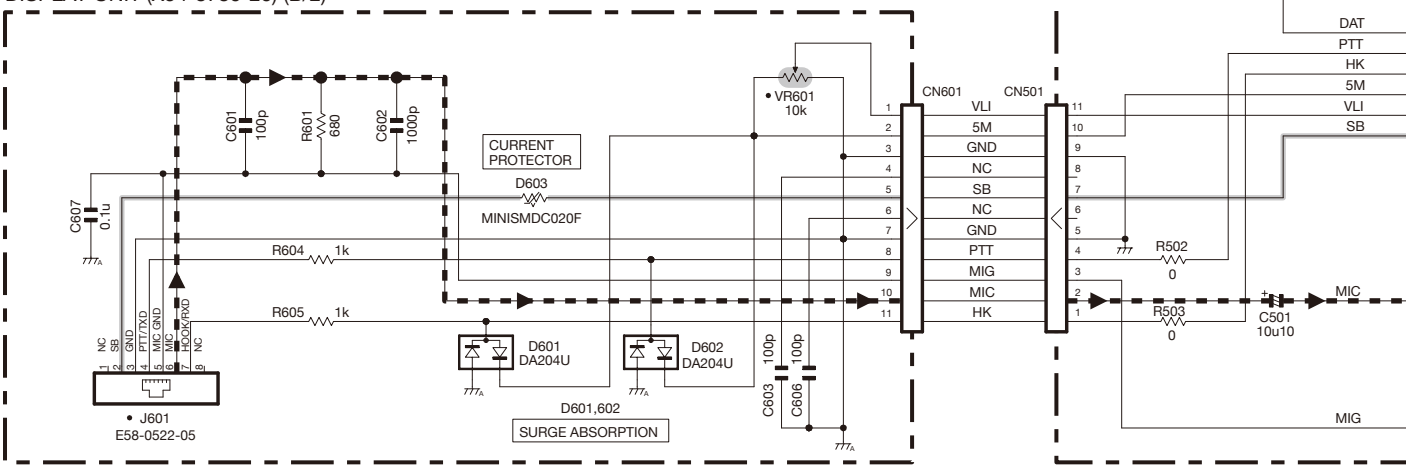

SCHEMATIC DIAGRAM NXR-810

DISPLAY UNIT (X54-3730-20) (A/2)

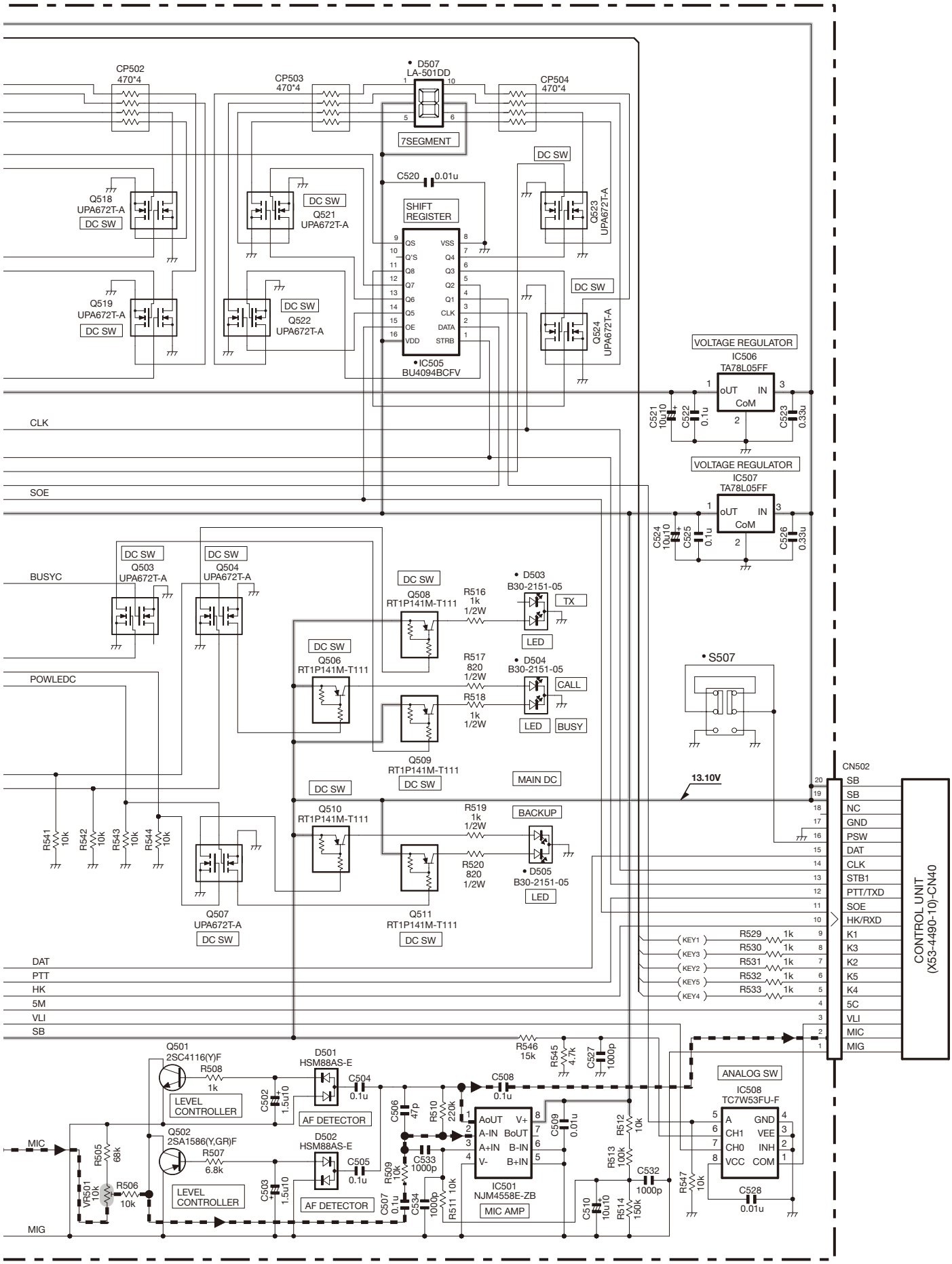

Note : The components marked with a dot (•) are parts of layer 1.

NXR-810 SCHEMATIC DIAGRAM

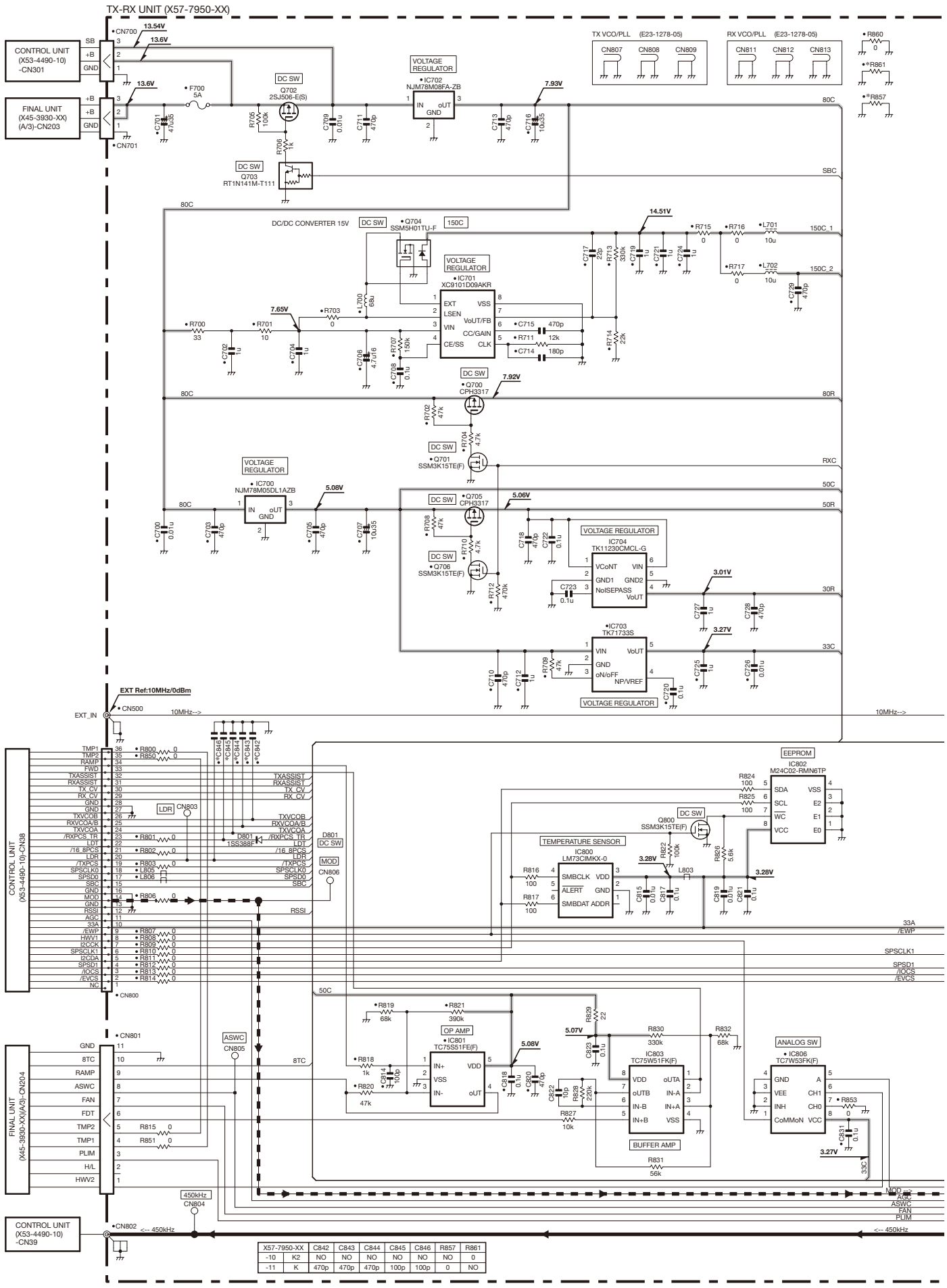

X57-7950-XX	C842	C843	C844	C845	C846	R857	R861
-10	K2	NO	NO	NO	NO	NO	0
-11	K	470p	470p	470p	100p	100p	0

SCHEMATIC DIAGRAM NXR-810

TX-RX UNIT (X57-7950-XX)

X57-7950-XX	C551	R523
-10	K2	NO	0
-11	K	10p	150

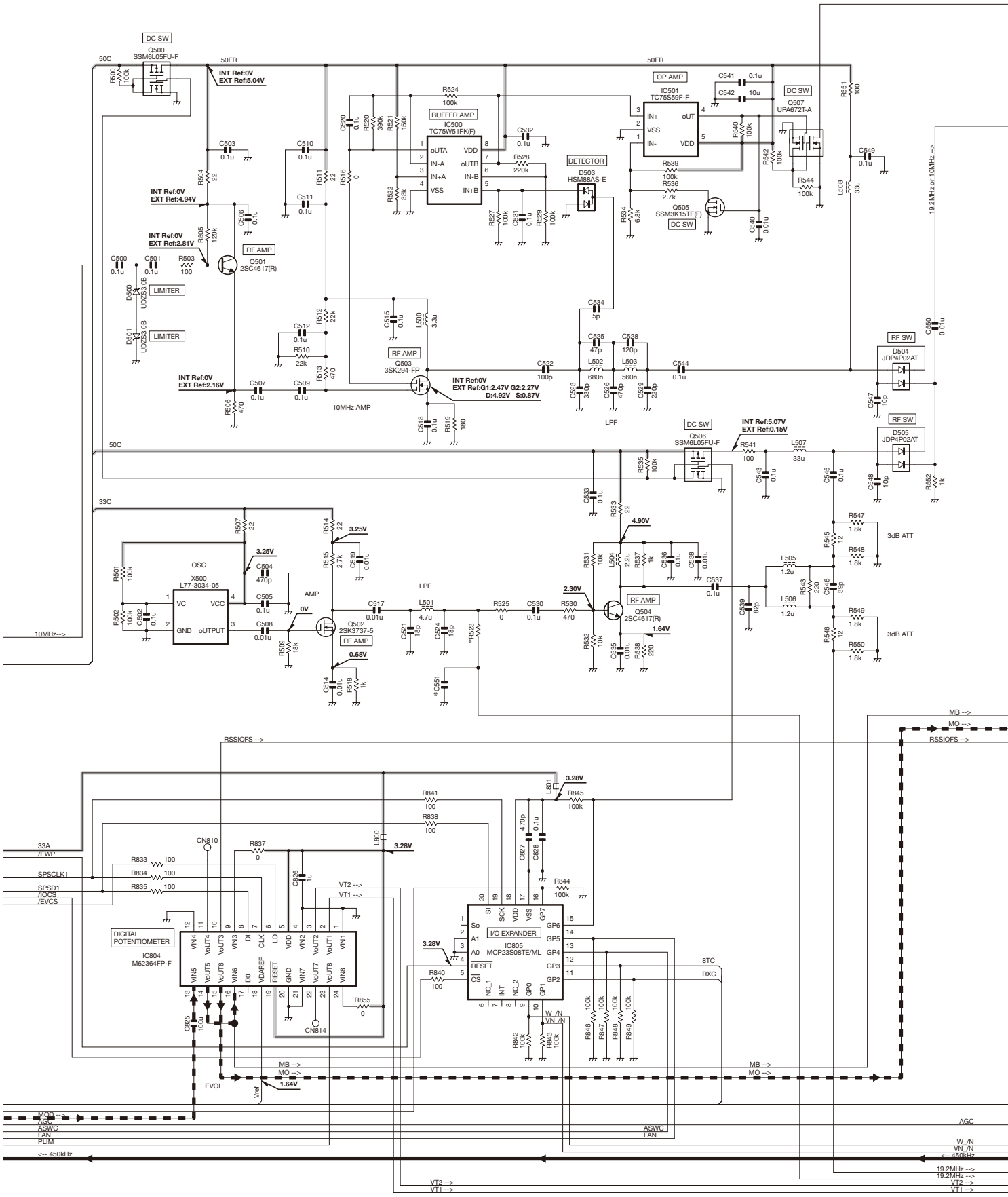

NXR-810 SCHEMATIC DIAGRAM

TX-RX UNIT (X57-7950-XX)

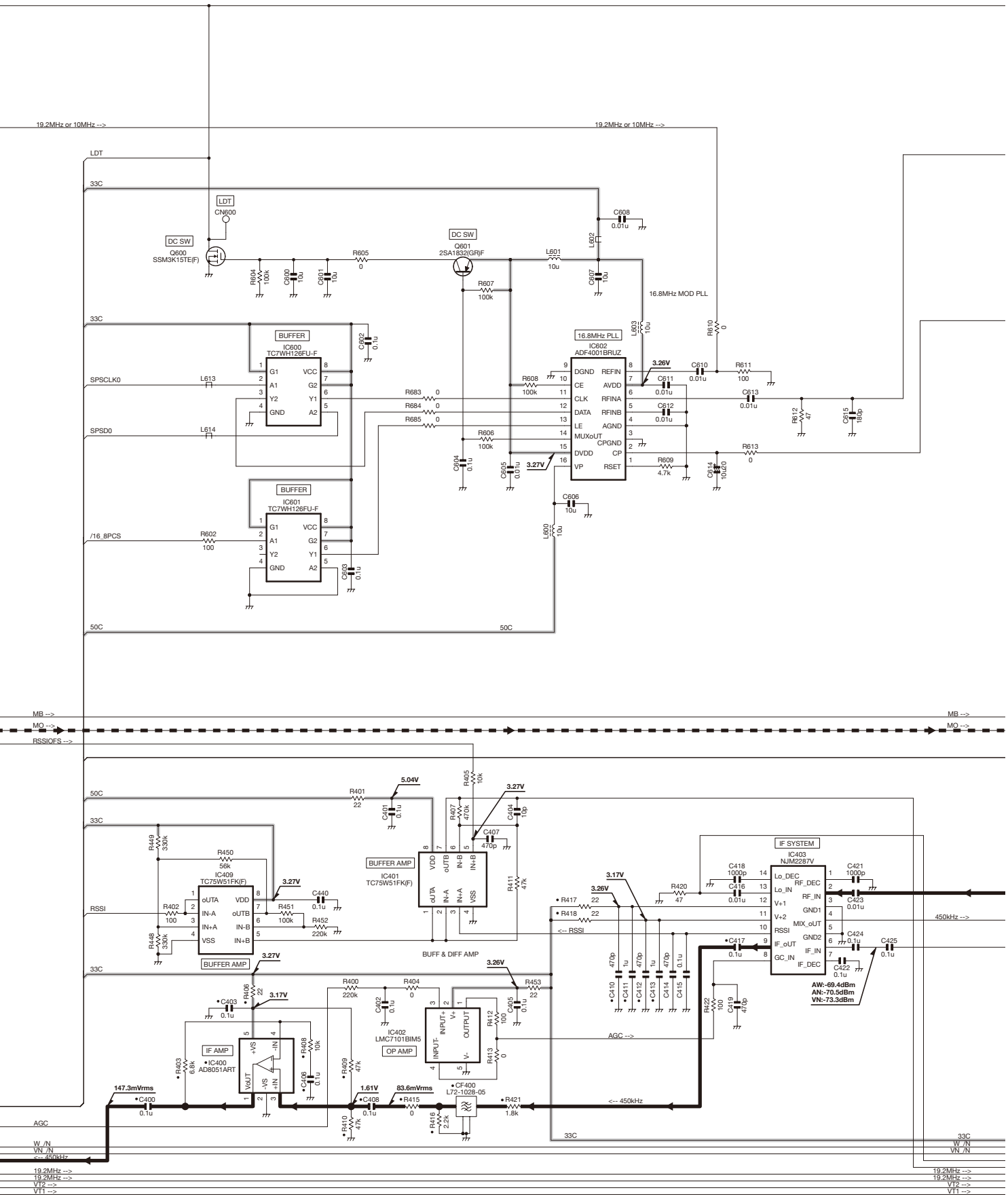

SCHEMATIC DIAGRAM NXR-810

TX-RX UNIT (X57-7950-XX)

X57-7950-XX		R444	R648
-10	K2	1.2k	270k
-11	K	820	390k

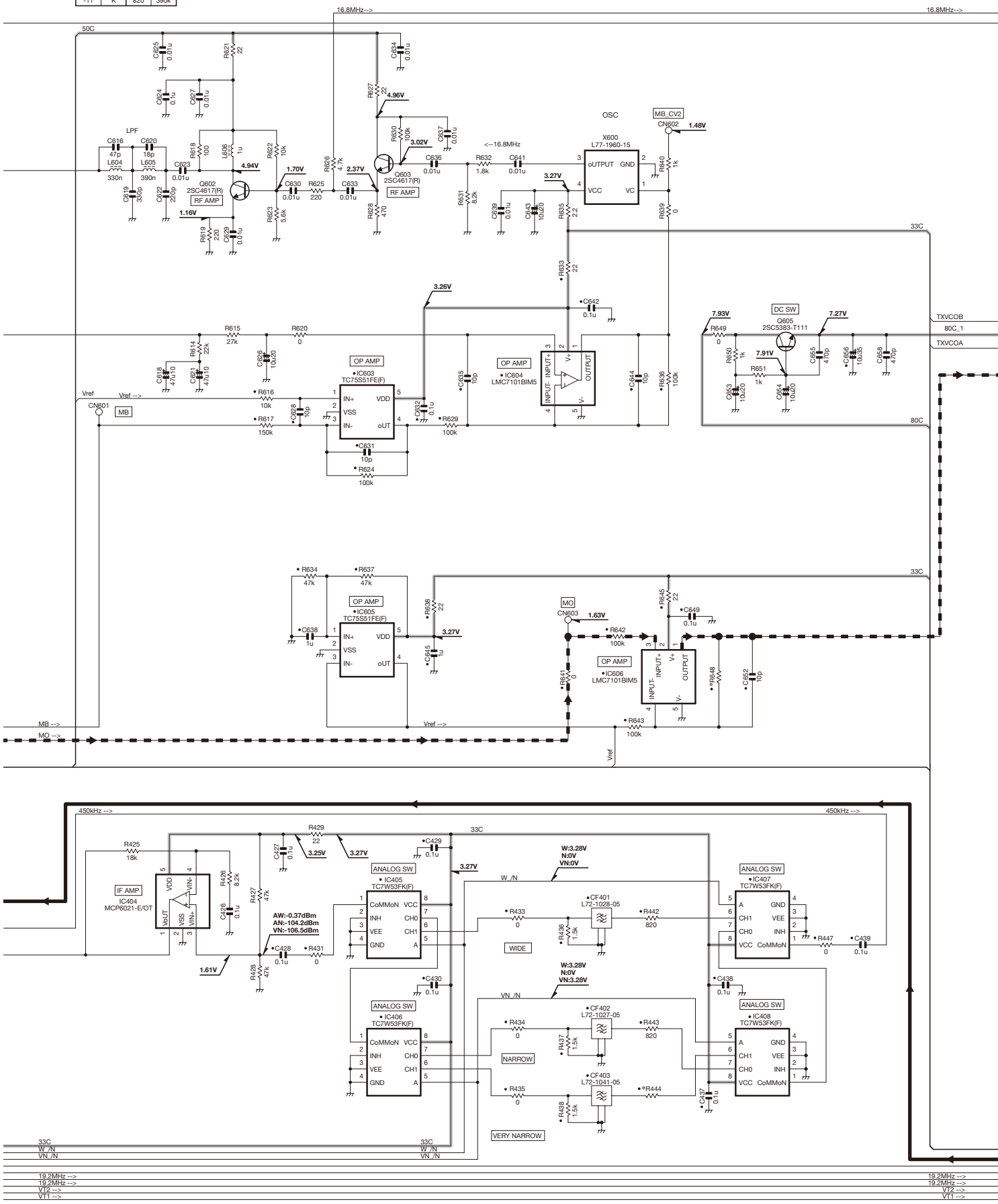

NXR-810 SCHEMATIC DIAGRAM

TX-RX UNIT (X57-7950-XX)

X58-5100-XX (B/2)		Q354	D352	D353	D355	D357	C352	C353	C354	C355	C363	C364	C365	C368	C370	C371	C372	C373	C382	C383	L350	L351	L358	L360	L361	L367	L368	R356	R374	R375
-10	K2	2SC5636	1SV278F	1SV278F	1SV282-F	1SV282-F	NO	NO	470p	470p	12p	0.5p(B)	1p(B)	6p(B)	5p(B)	5p(B)	5p(B)	5p(B)	5p(B)	3p(B)	1u	1u	22n	10u	10u	NO	NO	18	0	NO
-11	K	2SC5108(Y)F	1SV325F	1SV325F	1SV278F	1SV278F	100p	100p	47p	27p	9p(B)	2p(B)	1.5p(B)	4p(B)	7p(B)	4p(B)	6p(B)	3p(B)	3p(B)	5p(B)	10u	10u	17.5n	NO	NO	1u	1u	27	NO	0

X58-5100-XX (A/2)		C300	C312	C323	C325	C328	C330	C332	L307	L308	L309	L314	L315	R302	R312	R318	R319	R320	R321	R325	R326
-10	K2	0.047uF	12p(G)	3p(B)	NO	12p(G)	3.5p(B)	470p	10n	NO	47n	10n	39n	150	47	2.2k	390	10k	5.6k	0	NO
-11	K	0.15uF	5p(B)	NO	8p(B)	5p(B)	4p	10p	NO	15n	15n	NO	22n	120	33	120	150	22k	10k	NO	0

X57-7950-XX		C662	C664	C665	C668	C690	C691	L607	L608	L619	R663
-10	K2	7p(B)	3.5p(B)	NO	NO	NO	NO	18n	18n	NO	0
-11	K	5p(C)	NO	3p(B)	3p(B)	470p	470p	22n	22n	L92-0163-05	NO

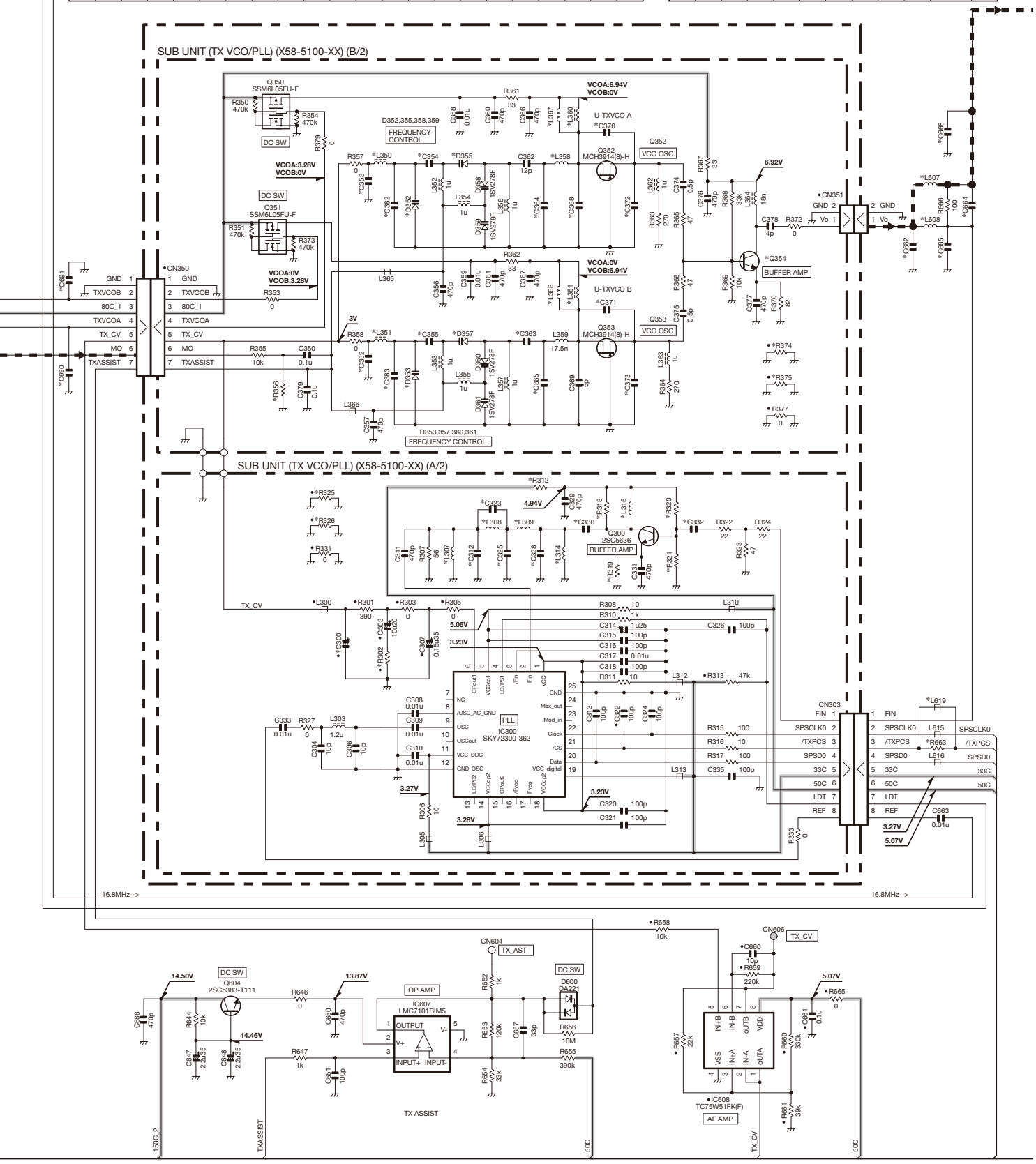

X57-795 5/8, X58-510 (A,B/2) 1/1

SCHEMATIC DIAGRAM NXR-810

TX-RX UNIT (X57-7950-XX)

X58-5090-XX (A/2)		C312	C325	C328	L309	L316	R318	R325	R326
-10	K2	7p(B)	12p	7p(B)	22n	22n	120	0	NO
-11	K	6p(B)	10p	6p(B)	18n	18n	NO	NO	0

X57-7950-XX		C213	C214	C216	C248	C249	L200	L201
-10	K2	10p(B)	5p(B)	5p(B)	NO	NO	27n	27n
-11	K	8p(B)	3p(B)	3p(B)	470p	100p	22n	22n

X58-5090-XX (B/2)		Q354	C362	C363	C364	C365	C368	C369	C370	C371	C372	C373	C378	C380	C381	C382	C383	L364	R374	R375
-10	K2	2SC5636	27p	18p	6p(B)	4p(B)	10p	8p(B)	6p(B)	5p(B)	4p(B)	3p(B)	4p	2p(B)	2p(B)	5p(B)	5p(B)	22n	0	NO
-11	K	2SC5108(Y)F	15p	10p	3p(B)	2.5p(B)	8p(B)	7p(B)	7p(B)	6p(B)	5p(B)	4p(B)	3p(B)	1p(B)	NO	4p(B)	4p(B)	39n	NO	0

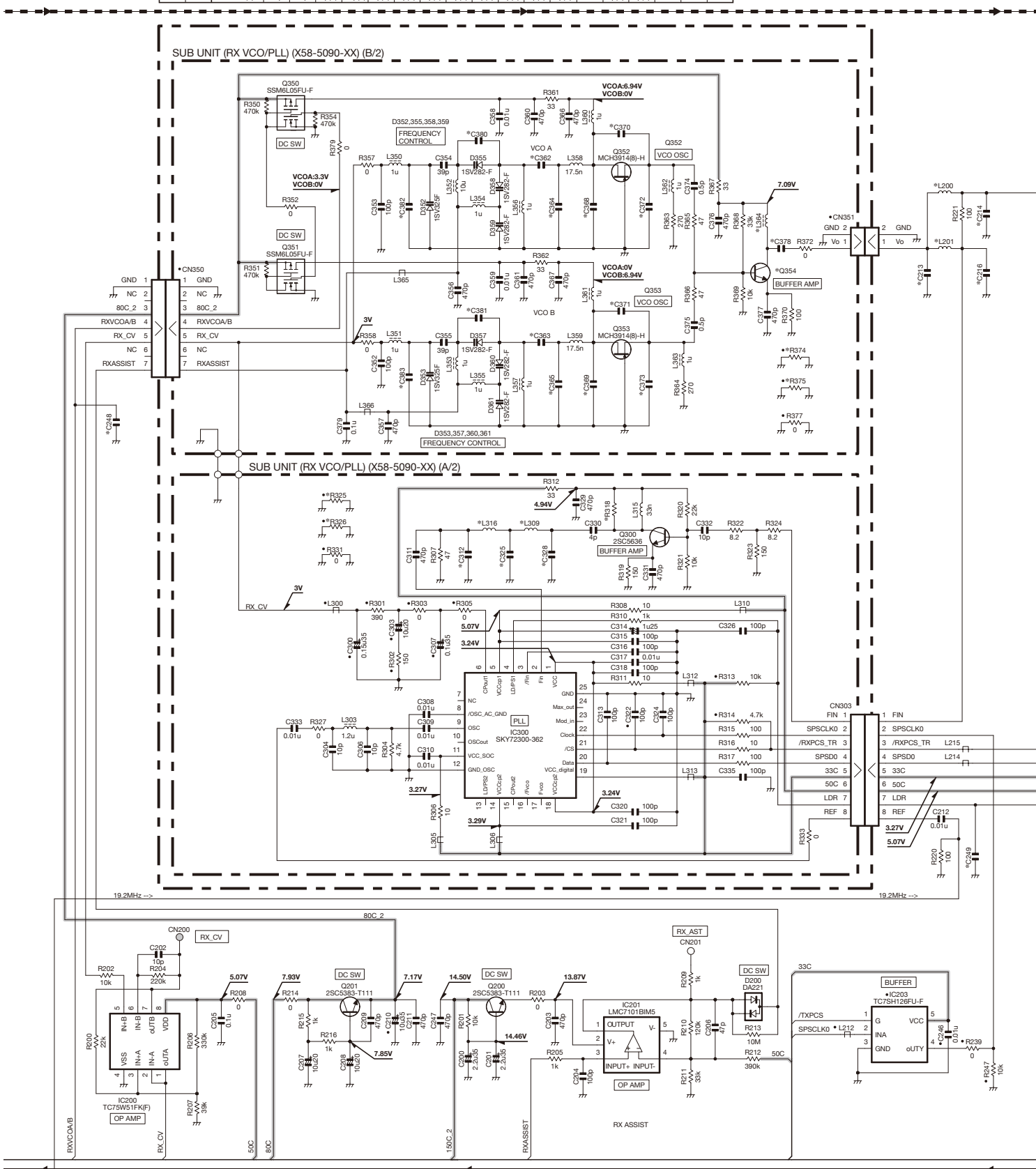

NXR-810 SCHEMATIC DIAGRAM

TX-RX UNIT (X57-7950-XX)

X57-7950-XX		Q202	Q203	C101	C102	C103	C105	C107	C108	C111	C112	C113	C115	C117	C121	C123	C161	C162	C163	C164	C165	C232	C233	C234	L107	L109	L206	R223	R246
-10	K2	2SC5636	2SC5636	56p	6p(B)	15p(G)	9p(B)	12p(G)	12p(G)	9p(B)	18p(G)	10p(B)	9p(B)	5p(B)	6p(B)	0.1u	560p	5p(B)	5p(B)	6p(B)	5p(B)	NO	47p	47p	12n	6.8n	100n	330	220
-11	K	2SC5108(Y)F	2SC5108(Y)F	15p	1p(B)	12p(G)	5p(B)	9p(B)	8p(B)	5p(B)	10p(B)	8p(B)	5p(B)	2p(B)	3p(B)	470p	15p(G)	3.5p(B)	3p(B)	3p(B)	3.5p(B)	2p(B)	33p	33p	10n	5.6n	150n	180	330

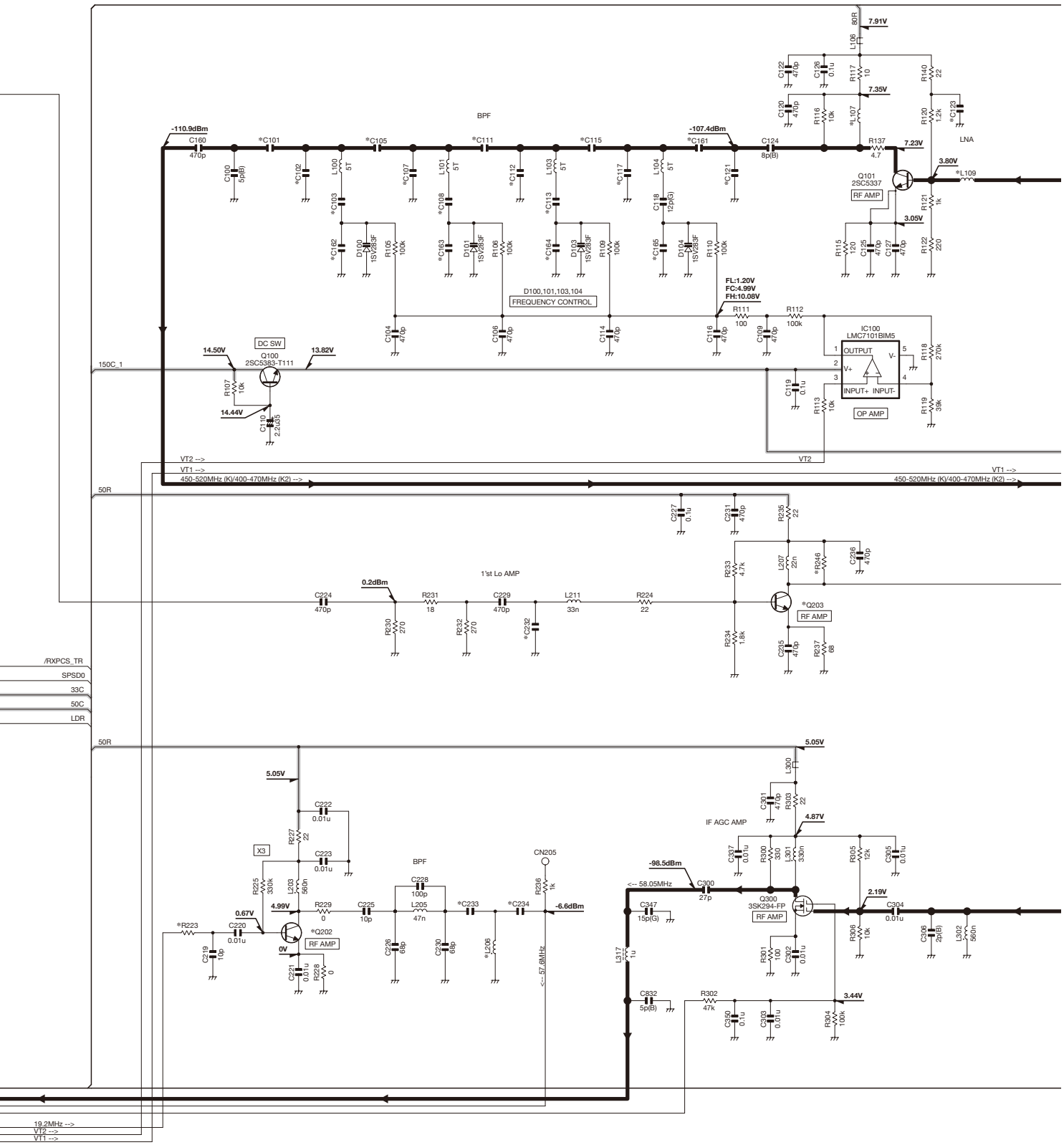

SCHEMATIC DIAGRAM NXR-810

TX-RX UNIT (X57-7950-XX)

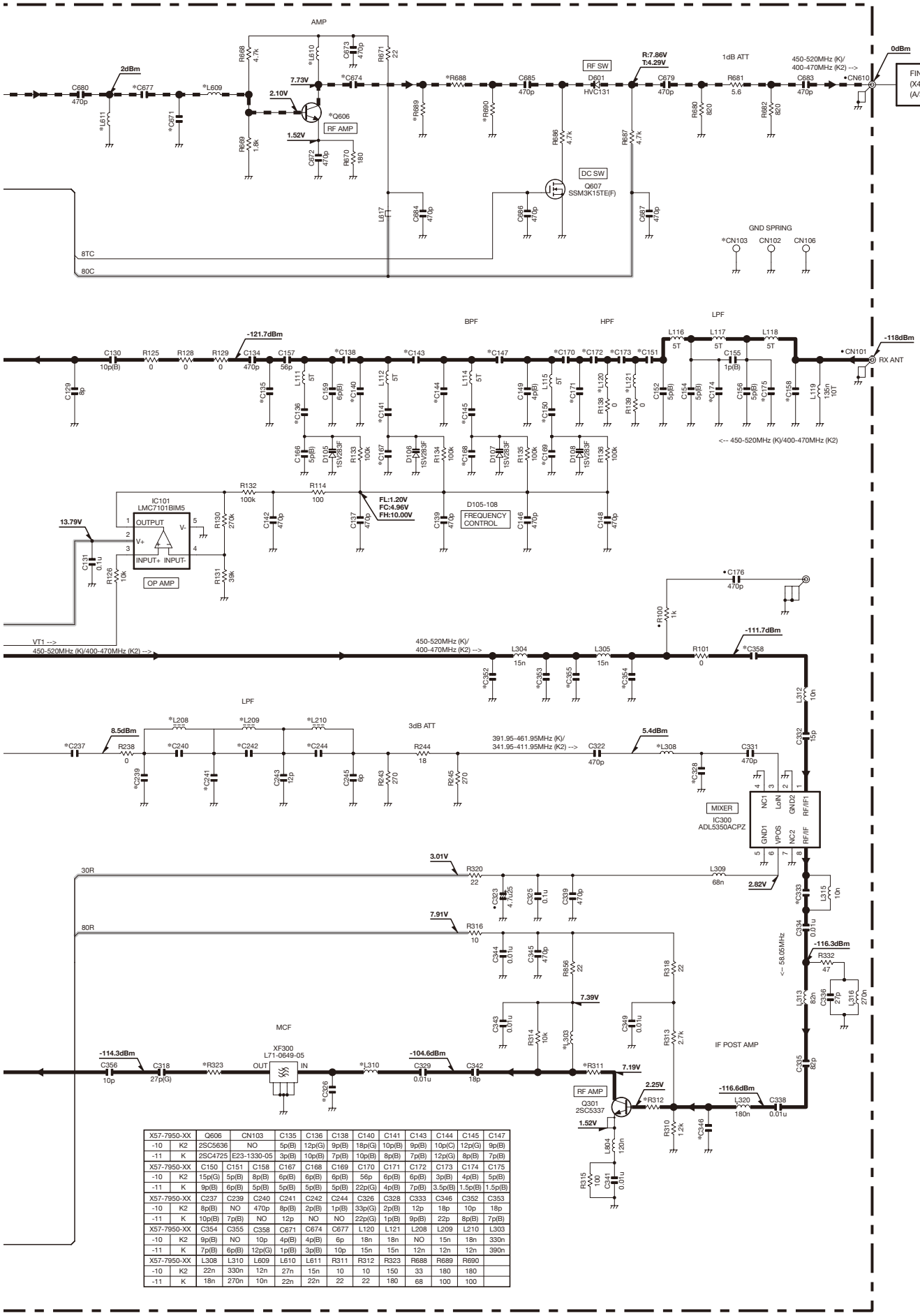

X57-7950-XX		Q606	CN103	C135	C136	C138	C140	C141	C143	C144	C145	C147
-10	K2	2SC5636	NO	5p(B)	12p(G)	9p(B)	18p(G)	10p(B)	9p(B)	10p(C)	12p(G)	9p(B)
-11	K	2SC4725	E23-1330-05	3p(B)	10p(B)	7p(B)	10p(B)	8p(B)	7p(B)	12p(G)	8p(B)	7p(B)
X57-7950-XX		C150	C151	C158	C167	C168	C169	C170	C171	C172	C173	C174	C175
-10	K2	15p(G)	5p(B)	8p(B)	6p(B)	6p(B)	6p(B)	56p	6p(B)	6p(B)	3p(B)	4p(B)	5p(B)
-11	K	9p(B)	6p(B)	5p(B)	5p(B)	5p(B)	5p(B)	22p(G)	4p(B)	7p(B)	3.5p(B)	1.5p(B)	1.5p(B)
X57-7950-XX		C237	C239	C240	C241	C242	C244	C326	C328	C333	C346	C352	C353
-10	K2	8p(B)	NO	470p	8p(B)	2p(B)	1p(B)	33p(G)	2p(B)	12p	18p	10p	18p
-11	K	10p(B)	7p(B)	NO	12p	NO	NO	22p(G)	1p(B)	9p(B)	22p	8p(B)	7p(B)
X57-7950-XX		C354	C355	C358	C671	C674	C677	L120	L121	L208	L209	L210	L303
-10	K2	9p(B)	NO	10p	4p(B)	4p(B)	6p	18n	18n	NO	15n	18n	330n
-11	K	7p(B)	6p(B)	12p(G)	1p(B)	3p(B)	10p	15n	15n	12n	12n	12n	390n
X57-7950-XX		L308	L310	L609	L610	L611	R311	R312	R323	R688	R689	R690	
-10	K2	22n	330n	12n	27n	15n	10	10	150	33	180	180	
-11	K	18n	270n	10n	22n	22n	22	22	180	68	100	100	

Note : The components marked with a dot (•) are parts of layer 1.

NXR-810 BLOCK DIAGRAM

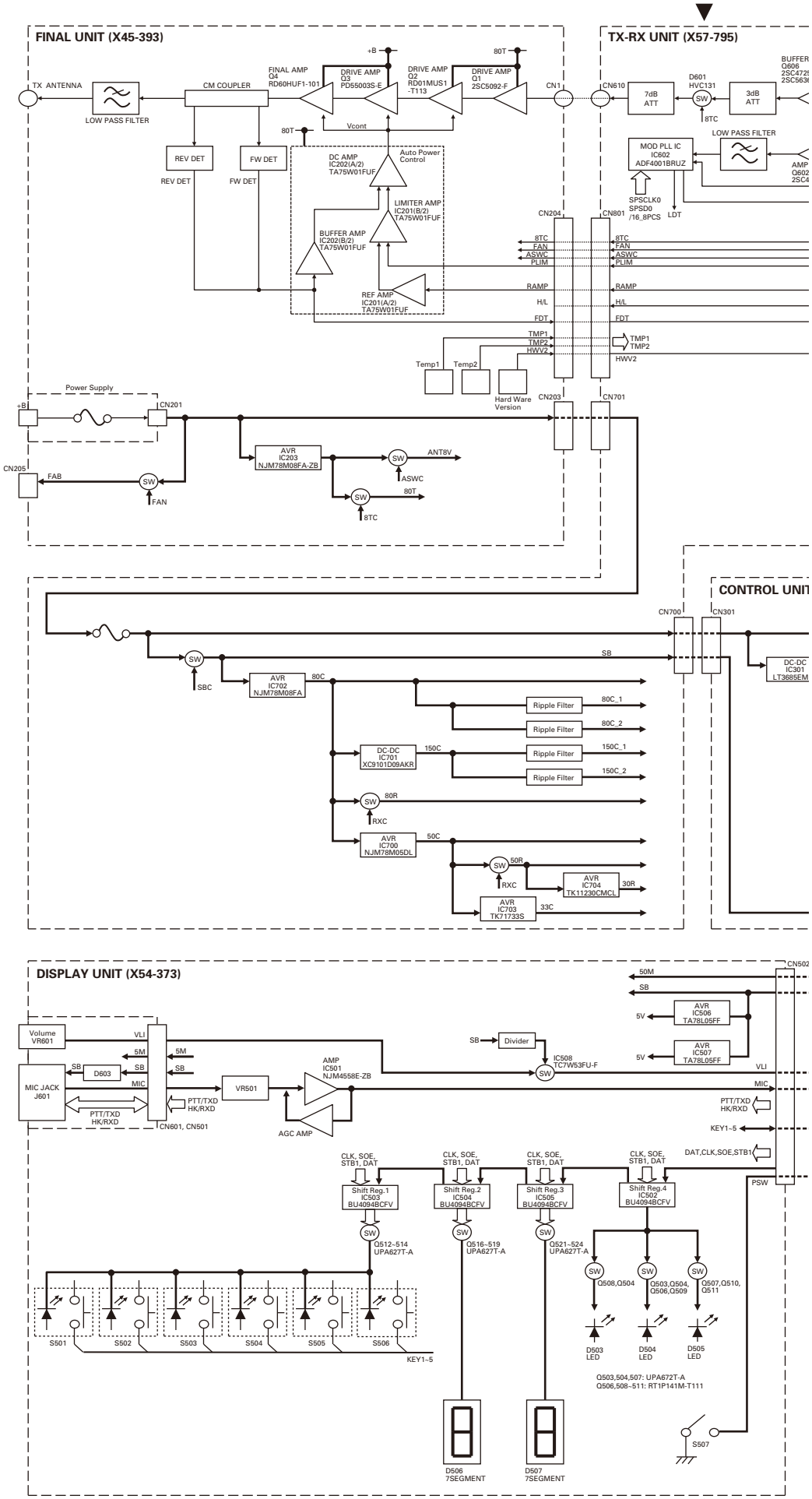

BLOCK DIAGRAM NXR-810

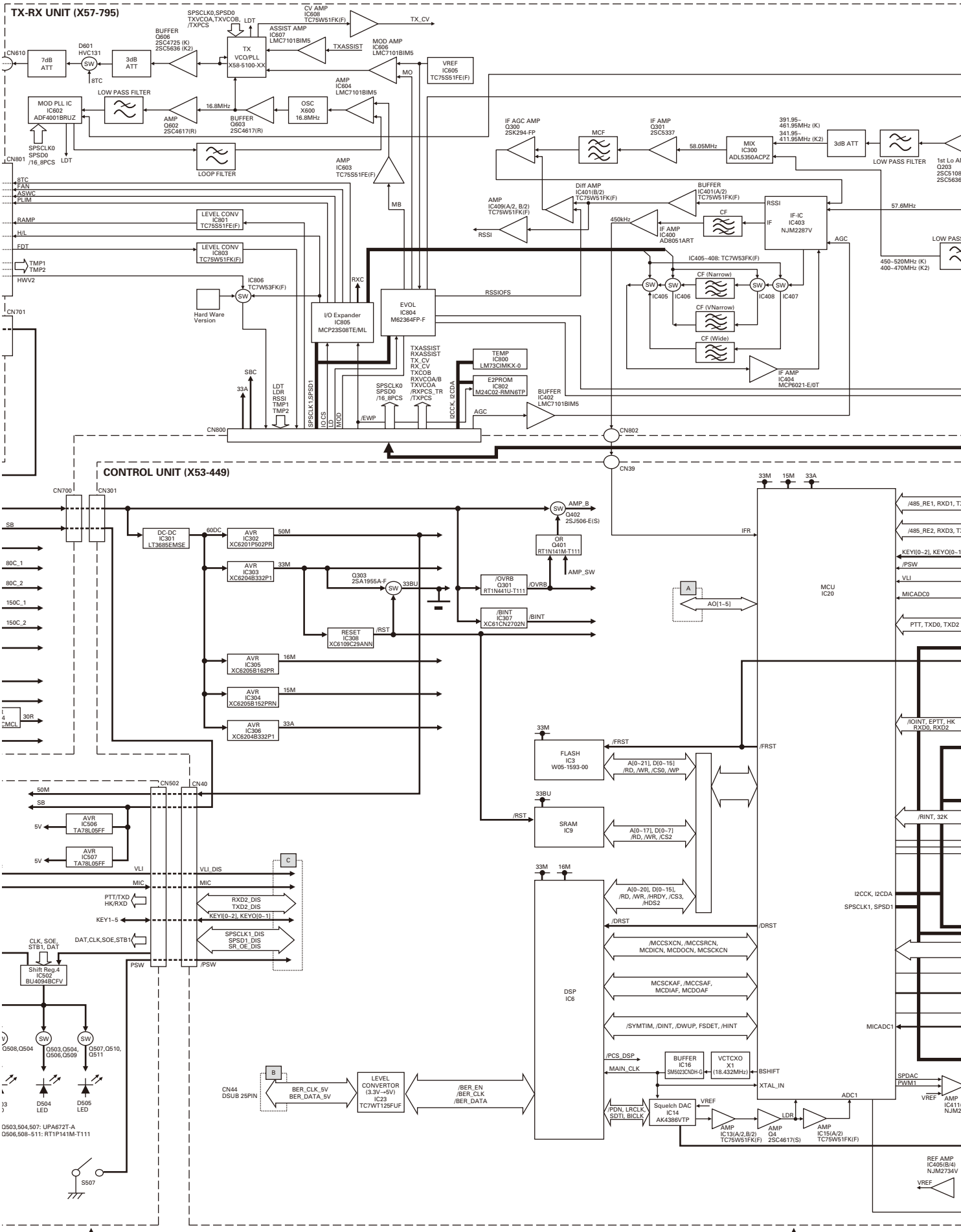

NXR-810 BLOCK DIAGRAM

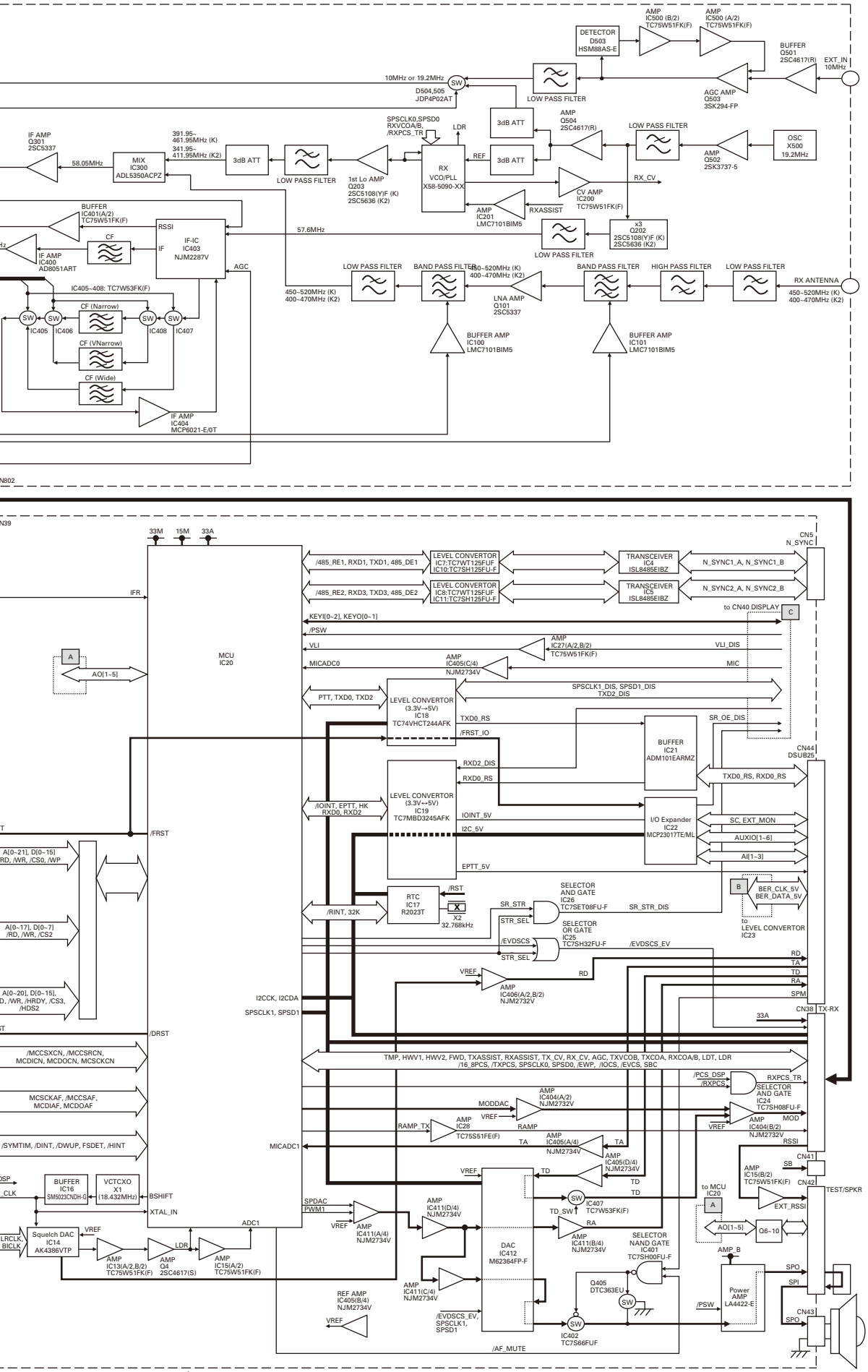

OPTIONAL ACCESSORIES: KES-5 (EXTERNAL SPEAKER)

When Using an External Speaker

1. Make sure the unit's power is tuned off.
2. When using the external speaker, remove the jumper lead from the connector, and attach the speaker cable.
3. When not using the external speaker, replace the jumper lead and insert the connector into the speaker jack (pin 9 and 12).

Specifications

Maximum input power 40W
Impedance 4Ω
Dimensions (W x H x D) projection not included
..... 129 x 129 x 77 mm (5-1/16 x 5-1/16 x 3 inches)
Weight ..... 820g / 1.81 lbs

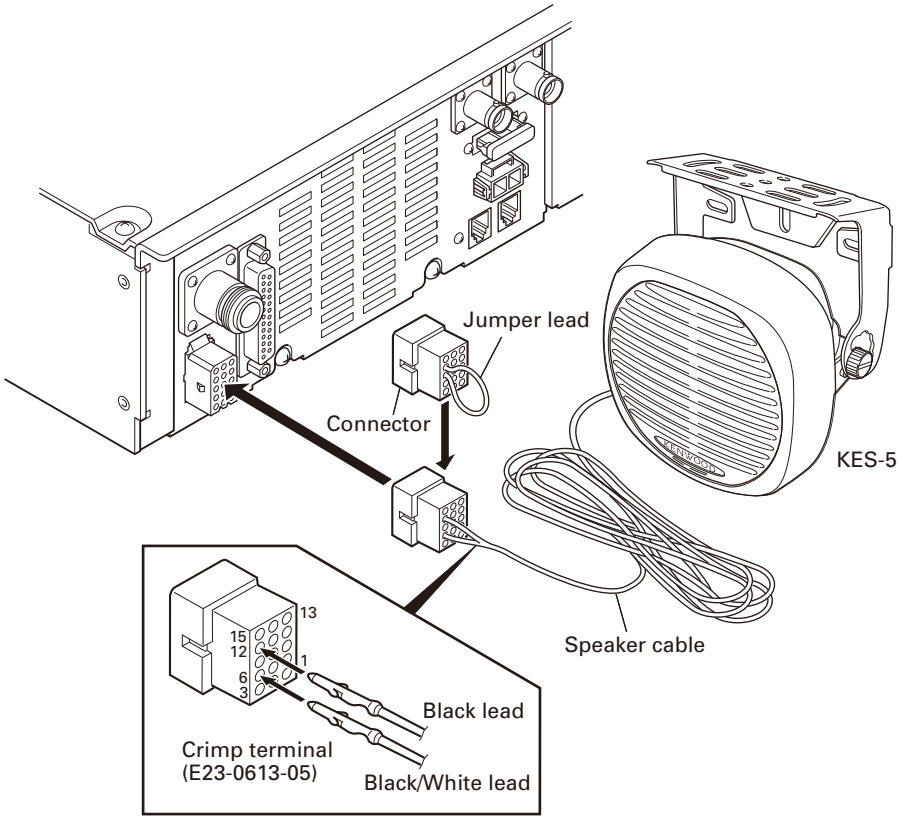

NXR-810

SPECIFICATIONS

General

Frequency Ranges.....K: 450~520MHz
K2: 400~470MHz
Number of Channels.....30
Channel Spacing
Analog.....12.5/ 25kHz
Digital.....6.25/ 12.5kHz
PLL Channel Step.....3.125/ 5kHz
Antenna Impedance 50Ω
Operating Voltage..... 10.8~15.6V DC
Current Drain
Standby..... 0.5A
Receive 1.0A
Transmit 11.0A
TX Power
50% Duty..... 40W
100% Duty..... 25W
Operating Temperature Range
..... –22°F~+140°F (–30°C~+60°C)
Frequency Stability ..... ±0.5ppm
Dimension (W x H x D) (Projections not included)
.....19.02 x 3.46 x 13.39 inches (483 x 88 x 340 mm)
Weight (net)..... 21.4 lbs (9.7kg)

Receiver

Sensitivity
Digital@6.25kHz (3% BER) 0.22μV
Digital@12.5kHz (3% BER) 0.28μV
Analog (12dB SINAD).....0.28μV
Sensitivity
Analog@25kHz 80dB
Analog@12.5kHz 74dB
FM Hum & Noise
Analog@25kHz 55dB
Analog@12.5kHz 50dB
Intermodulation Distortion..... 80dB
Spurious Response..... 90dB
Audio Distortion (Ext. SP) ..... Less than 2.5% at 1000Hz
Audio Output (Ext. SP)....4W (at 4Ω, less than 5% distortion)

Transmitter

RF Power Output.....25~40W
Spurious & Harmonics..... 80dB
FM Hum & Noise
Analog@25kHz 55dB
Analog@12.5kHz 50dB
Audio Distortion..... Less than 1% at 1000Hz
Modulation.....16K0F3E, 11K0F3E, 8K30F1E, 8K30F1D, 8K30F7W, 4K00F1E, 4K00F1D,4K00F7W, 4K00F2D

Analog measurements made per TIA/EIA 603 and specifications shown are typical.
Kenwood reserves the right to change specifications without prior notice or obligation.

Kenwood Corporation
2967-3, Ishikawa-machi, Hachioji-shi, Tokyo, 192-8525 Japan

Kenwood U.S.A. Corporation
P.O. BOX 22745, 2201 East Dominguez Street, Long Beach, CA 90801-5745, U.S.A.

Kenwood Electronics Canada Inc.
6070 Kestrel Road, Mississauga, Ontario, Canada L5T 1S8

Kenwood Electronics Deutschland GmbH
Rembrücker Str. 15, 63150 Heusenstamm, Germany

Kenwood Electronics Belgium N.V.
Leuvensesteenweg 248 J, 1800 Vilvoorde, Belgium

Kenwood Electronics France S.A.
L'Etoile Paris Nord 2, 50 Allée des Impressionnistes, Bp 58416 Villepinte, 95944 Roissy Ch De Gaulle Cedex

Kenwood Electronics UK Limited
KENWOOD House, Dwight Road, Watford, Herts., WD18 9EB United Kingdom

Kenwood Electronics Europe B.V.
Amsterdamseweg 37, 1422 AC Uithoorn, The Netherlands

Kenwood Electronics Italia S.p.A.
Via G. Sirtori, 7/9 20129 Milano, Italy

Kenwood Ibérica, S.A.
Bolivia, 239-08020 Barcelona, Spain

Kenwood Electronics Australia Pty. Ltd.
Talavera Business Park Building A, 4 Talavera Road, North Ryde NSW 2113 Australia

Kenwood Electronics (Hong Kong) Ltd.
Suite 2504, 25/F, Tower 2, Nina Tower, No. 8 Yeung Uk Road, Tsuen Wan, New Territories, Hong Kong

Kenwood Electronics Singapore Pte Ltd
1 Ang Mo Kio Street 63, Singapore 569110

NXR-810 PC BOARD

PC BOARD NXR-810

FINAL UNIT (X45-3930-XX) -10: K2 -11: K
Component side view (J79-0264-19)

FINAL UNIT (X45-3930-XX) -10: K2 -11: K
Component side view (J79-0264-19)

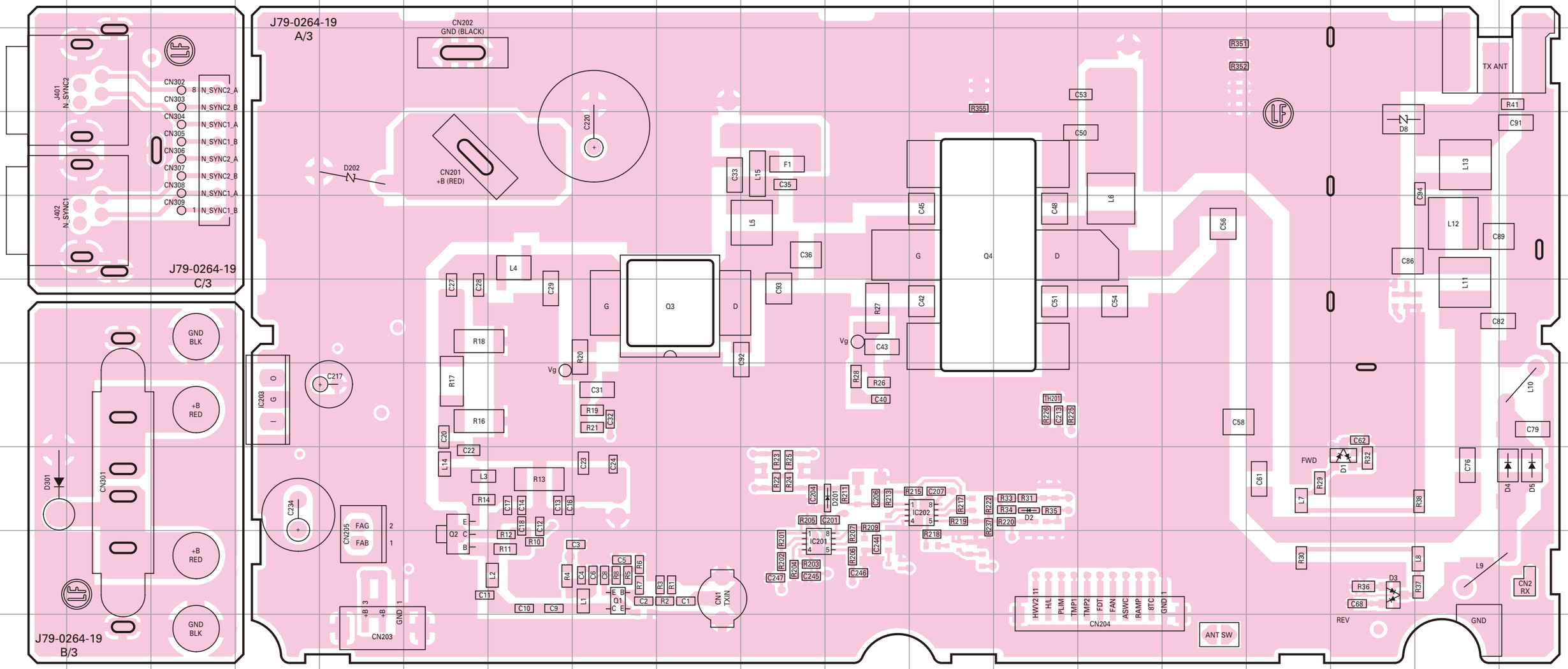

Ref. No.	Address	Ref. No.	Address
IC201	9J	D2	8M
IC202	8L	D3	9Q
IC203	7D	D4	8S
Q1	9H	D5	8S
Q2	9F	D8	4Q
Q3	6I	D201	8K
Q4	5L	D202	4E
D1	8Q	D301	8A

Component side
Layer 1
Layer 2
Layer 3
Layer 4
Foil side

NXR-810 PC BOARD

PC BOARD NXR-810

FINAL UNIT (X45-3930-XX) -10: K2 -11: K
Foil side view (J79-0264-19)

FINAL UNIT (X45-3930-XX) -10: K2 -11: K
Foil side view (J79-0264-19)

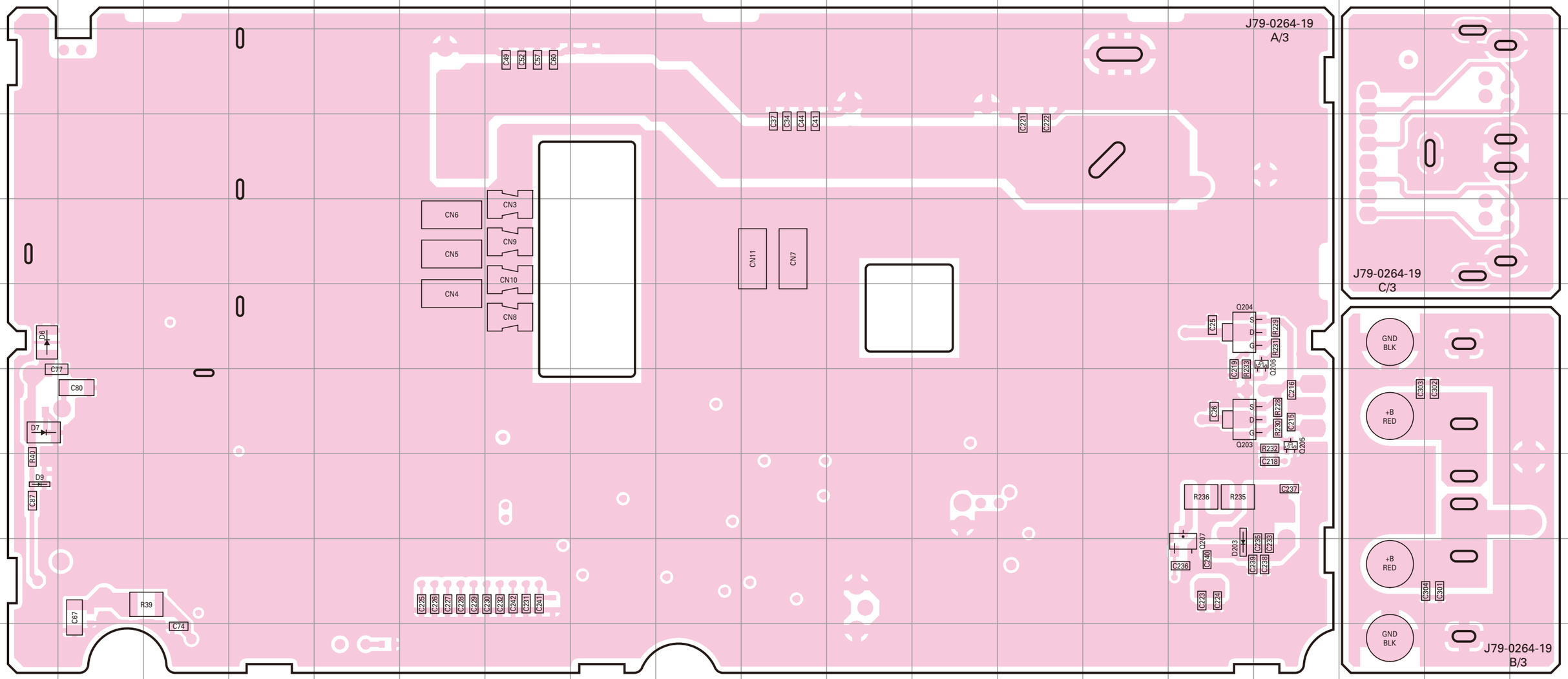

Ref. No.	Address	Ref. No.	Address
Q203	7O	D6	6A
Q204	6O	D7	7A
Q205	7P	D9	8A
Q206	6P	D203	9O
Q207	9O		

Component side
Layer 1
Layer 2
Layer 3
Layer 4
Foil side

NXR-810 PC BOARD

PC BOARD NXR-810

CONTROL UNIT (X53-4490-10)
Component side view (J79-0277-09)

CONTROL UNIT (X53-4490-10)
Component side view (J79-0277-09)

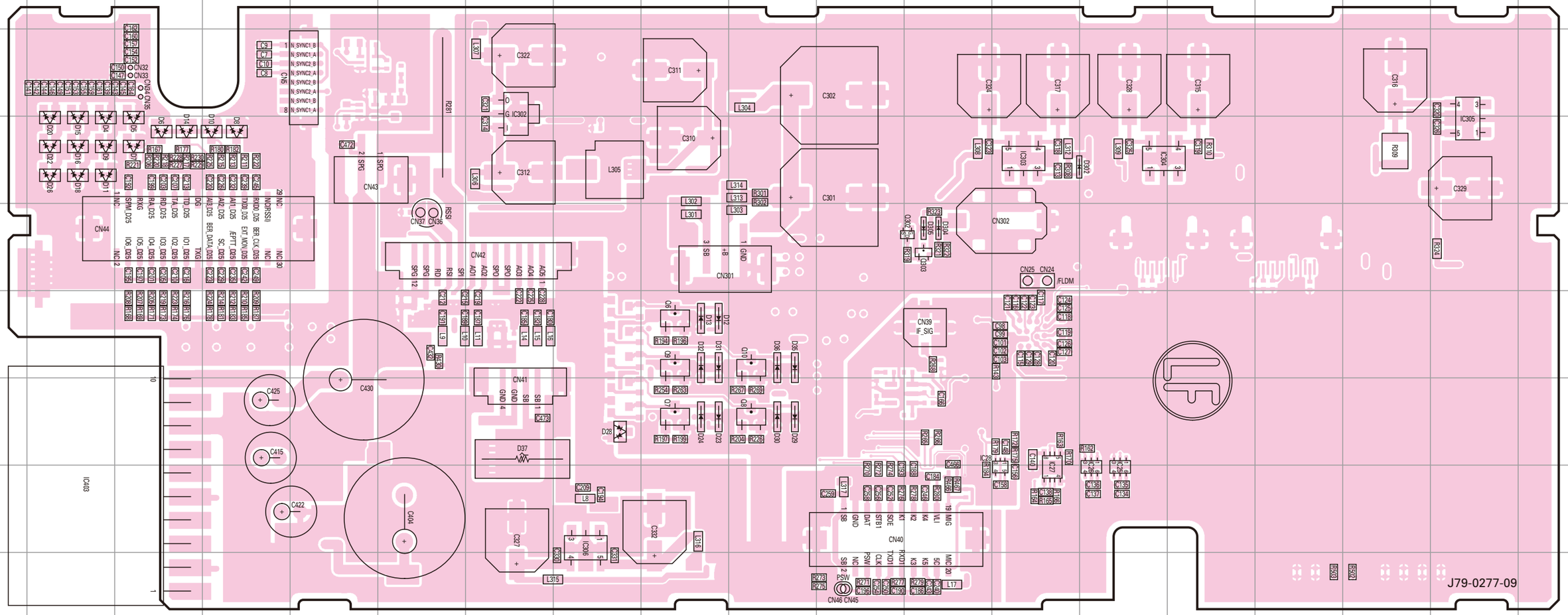

Ref. No.	Address	Ref. No.	Address	Ref. No.	Address	Ref. No.	Address	Ref. No.	Address
IC25	8N	Q6	6I	D7	4C	D18	4B	D32	6I
IC26	8N	Q7	7I	D8	4D	D20	4B	D35	6J
IC27	8M	Q8	7J	D9	4B	D22	4B	D36	6J
IC28	8M	Q9	6I	D10	4D	D23	7I	D37	7G
IC302	3G	Q10	6J	D11	4B	D24	7I	D302	4N
IC303	4M	Q302	5L	D12	6I	D26	4B	D304	5L
IC304	4N	Q303	5L	D13	6I	D28	7H	D305	5L
IC305	4R	D4	4B	D14	4C	D29	7J		
IC306	8H	D5	4C	D15	4B	D30	7J		
IC403	8B	D6	4C	D16	4B	D31	6I		

Component side
Layer 1
Layer 2
Layer 3
Layer 4
Layer 5
Layer 6
Foil side

NXR-810 PC BOARD

PC BOARD NXR-810

CONTROL UNIT (X53-4490-10)
Foil side view (J79-0277-09)

CONTROL UNIT (X53-4490-10)
Foil side view (J79-0277-09)

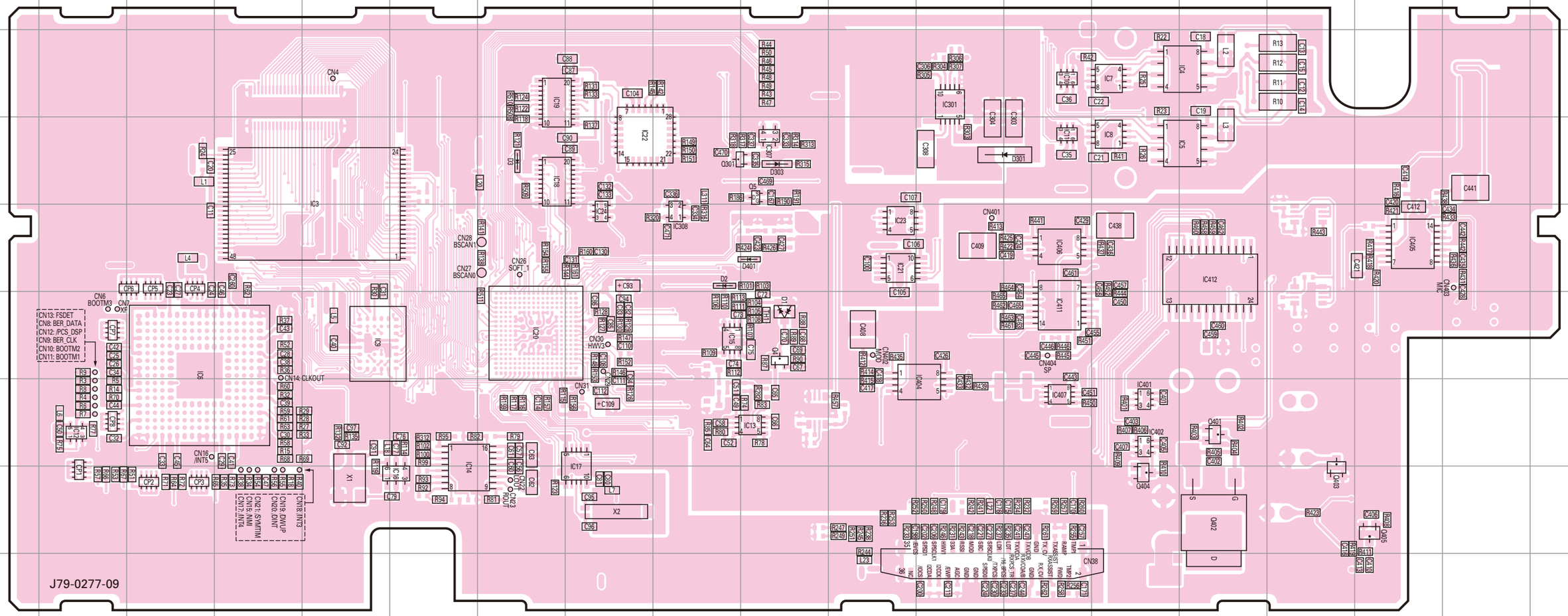

Ref. No.	Address	Ref. No.	Address	Ref. No.	Address	Ref. No.	Address	Ref. No.	Address
IC3	4E	IC13	7J	IC23	5K	IC407	7M	Q405	8Q
IC4	3O	IC14	8F	IC24	5H	IC411	6M	D1	6J
IC5	4O	IC15	6I	IC301	3L	IC412	5O	D2	5I
IC6	6C	IC16	8F	IC307	4J	Q4	6J	D3	4G
IC7	3N	IC17	8H	IC308	5I	Q5	4J	D301	4M
IC8	4N	IC18	4G	IC401	7N	Q301	4I	D303	4J
IC9	6E	IC19	3G	IC402	7N	Q401	7O	D401	5J
IC10	3M	IC20	6G	IC404	7L	Q402	8O		
IC11	4M	IC21	5K	IC405	5Q	Q403	8P		
IC12	7B	IC22	4H	IC406	5M	Q404	8N		

Component side
Layer 1
Layer 2
Layer 3
Layer 4
Layer 5
Layer 6
Foil side

NXR-810 PC BOARD

PC BOARD NXR-810

DISPLAY UNIT (X54-3730-20) Component side view (J79-0295-09)

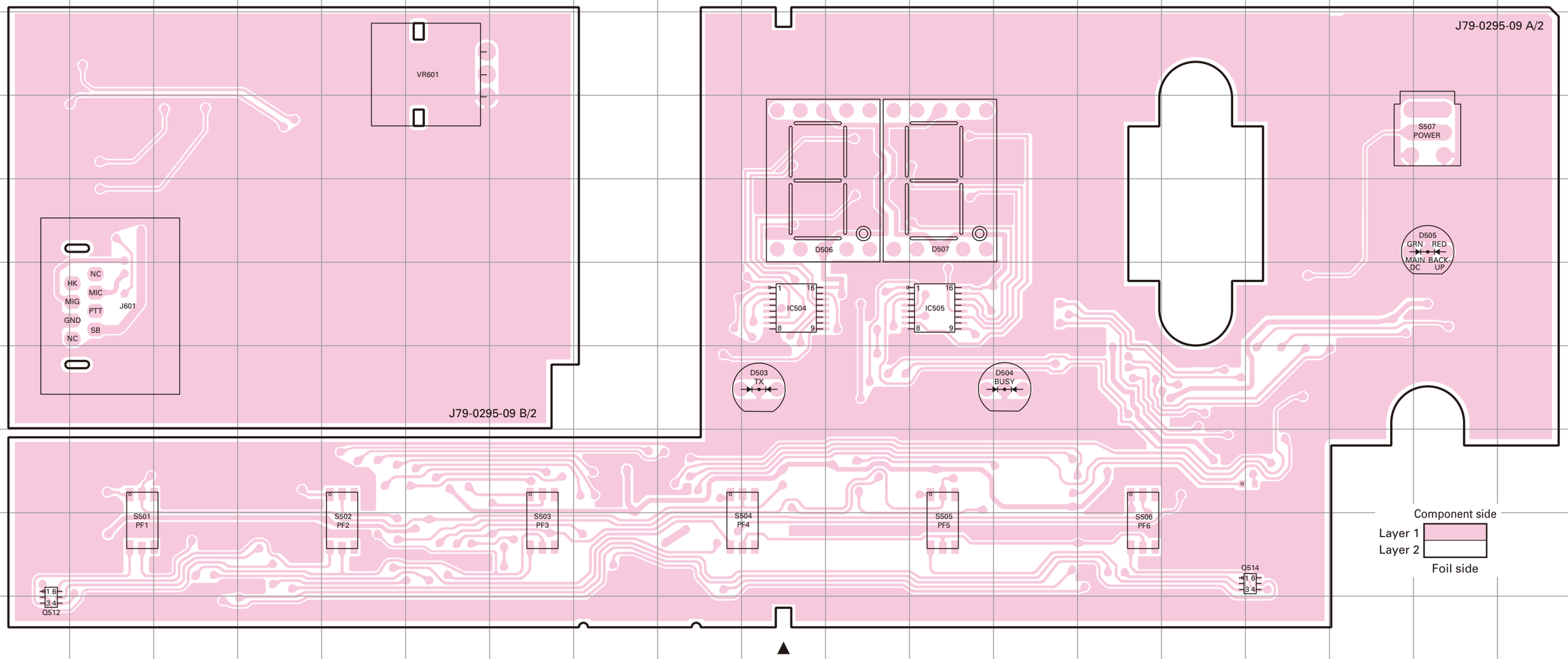

Ref. No.	Address
IC504	6J
IC505	6L
Q512	10A
Q514	9P
D503	7J
D504	7M
D505	5R
D506	5J
D507	5L

NXR-810 PC BOARD

PC BOARD NXR-810

DISPLAY UNIT (X54-3730-20) Foil side view (J79-0295-09)

DISPLAY UNIT (X54-3730-20) Foil side view (J79-0295-09)

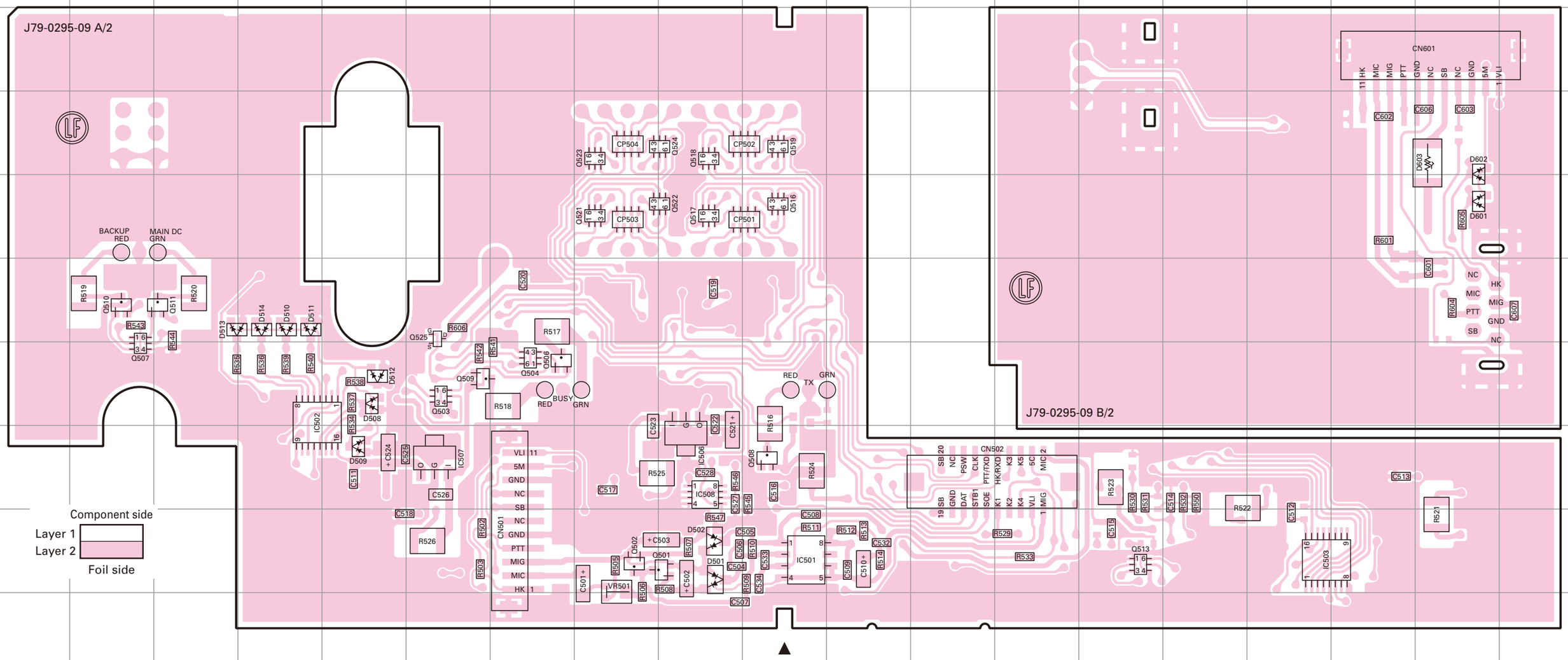

Ref. No.	Address	Ref. No.	Address	Ref. No.	Address	Ref. No.	Address
IC501	9J	Q506	7G	Q519	4J	D510	6D
IC502	7D	Q507	7B	Q521	5H	D511	6D
IC503	9P	Q508	8J	Q522	5I	D512	7E
IC506	8I	Q509	7F	Q523	4H	D513	6C
IC507	8F	Q510	6B	Q524	4I	D514	6D
IC508	8I	Q511	6C	Q525	6F	D601	5R
Q501	9I	Q513	9N	D501	9I	D602	4R
Q502	9H	Q516	5J	D502	9I	D603	4R
Q503	7F	Q517	5I	D508	7E		
Q504	7G	Q518	4I	D509	8E		

NXR-810 PC BOARD

TX-RX UNIT (X57-7950-XX) -10: K2 -11: K
Component side view (J79-0266-19)

PC BOARD NXR-810

TX-RX UNIT (X57-7950-XX) -10: K2 -11: K
Component side view (J79-0266-19)

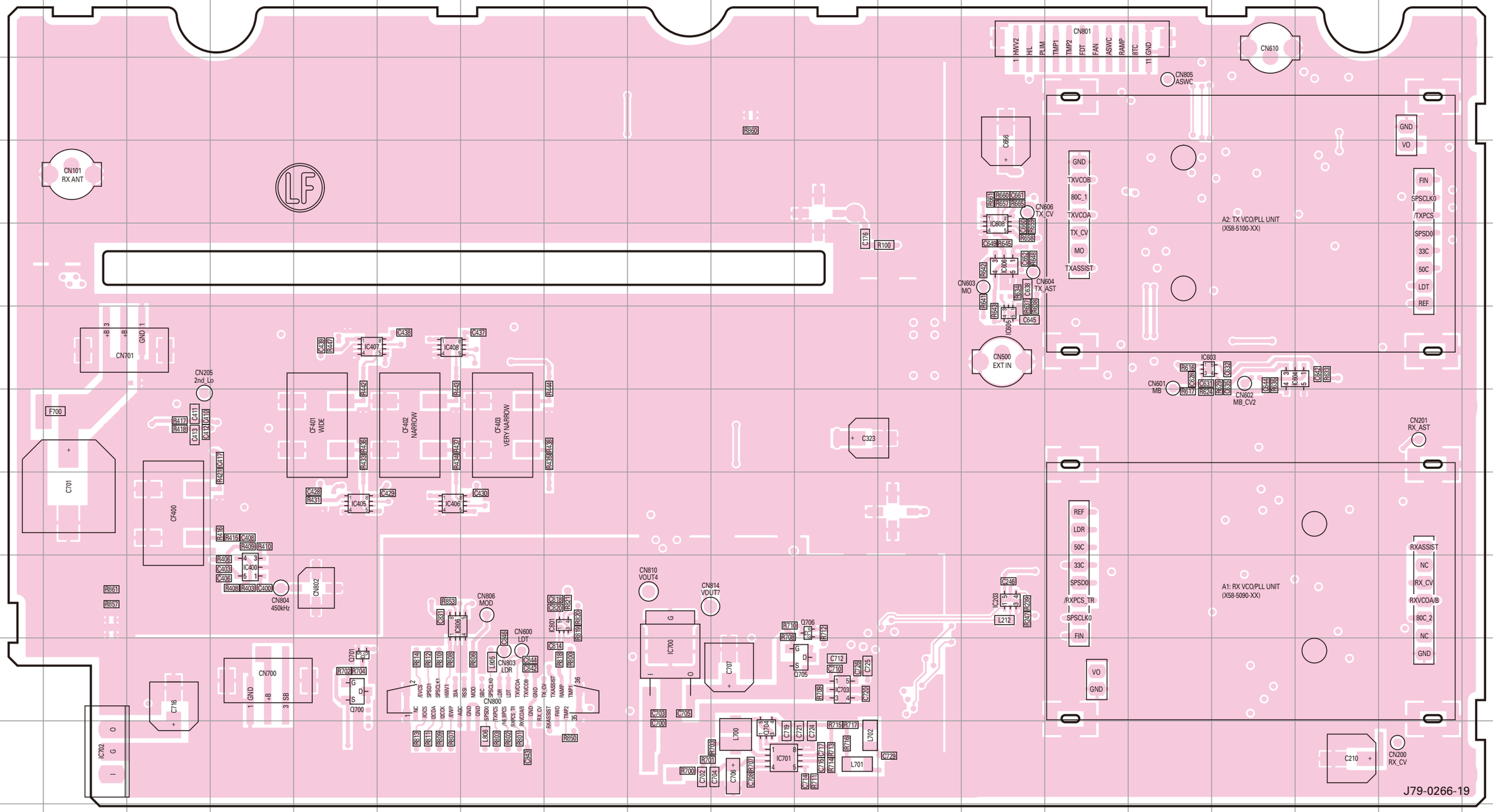

Ref. No.	Address	Ref. No.	Address	Ref. No.	Address	Ref. No.	Address
IC203	9M	IC603	6O	IC701	11J	Q701	10E
IC400	9D	IC604	6P	IC702	11B	Q704	11J
IC405	8E	IC605	6M	IC703	10K	Q705	10K
IC406	8F	IC606	5M	IC801	9H	Q706	9K
IC407	6E	IC608	5M	IC806	9F		
IC408	6F	IC700	10I	Q700	10E		

Component side
Layer 1
Layer 2
Layer 3
Layer 4
Foil side

NXR-810 PC BOARD

PC BOARD NXR-810

TX-RX UNIT (X57-7950-XX) -10: K2 -11: K
Foil side view (J79-0266-19)

TX-RX UNIT (X57-7950-XX) -10: K2 -11: K
Foil side view (J79-0266-19)

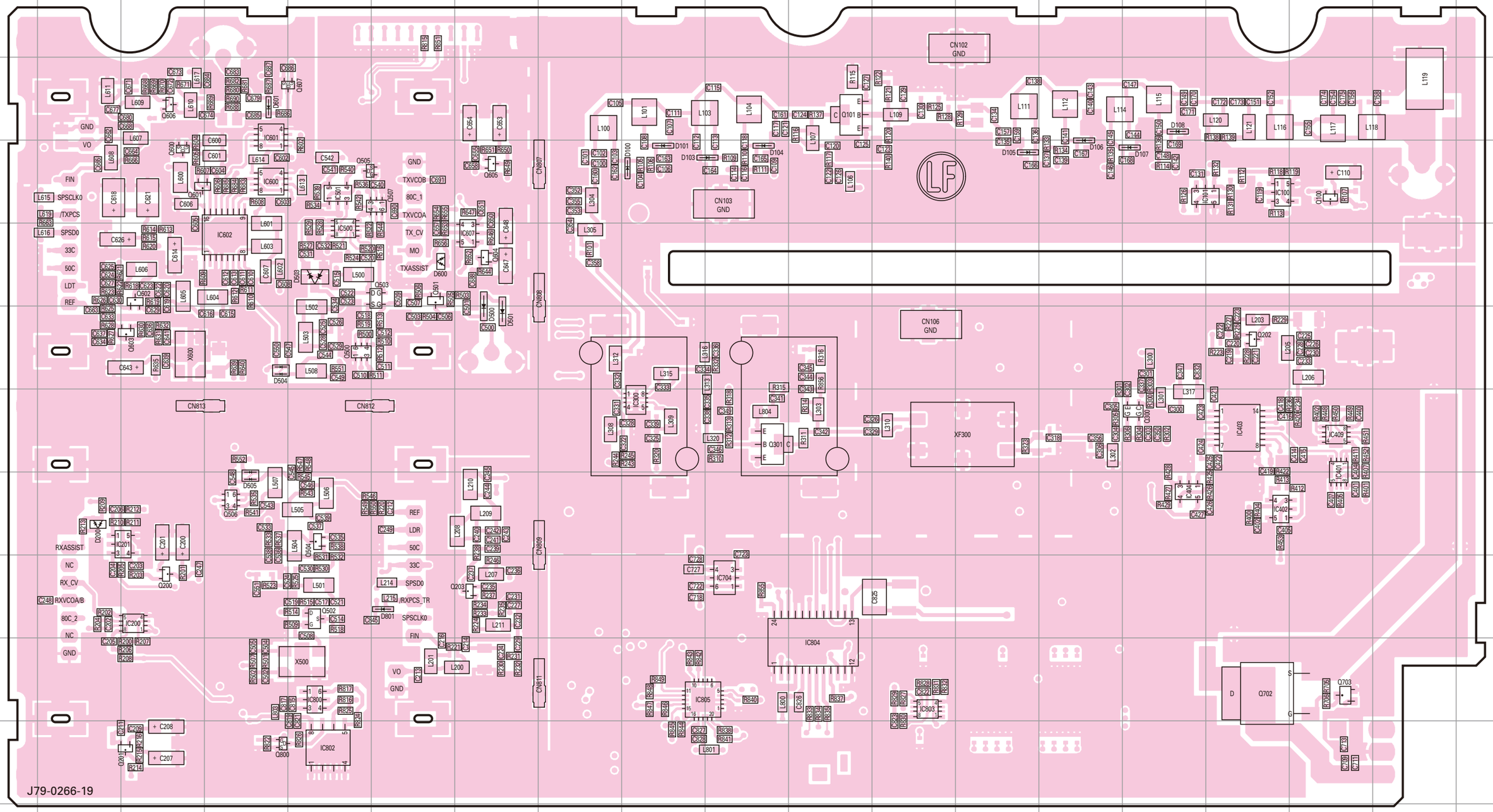

Ref. No.	Address	Ref. No.	Address	Ref. No.	Address	Ref. No.	Address	Ref. No.	Address	Ref. No.	Address	Ref. No.	Address	Ref. No.	Address	Ref. No.	Address	Ref. No.	Address	Ref. No.	Address	Ref. No.	Address
IC100	4P	IC402	8P	IC600	4D	IC802	11E	Q200	9C	Q500	6E	Q506	8D	Q604	5G	Q800	11D	D106	4N	D503	5E
IC101	4O	IC403	7P	IC601	3D	IC803	10L	Q201	11C	Q501	5F	Q507	4F	Q605	4G	D100	4I	D107	4O	D504	6D
IC200	9C	IC404	8O	IC602	5D	IC804	10K	Q202	6P	Q502	9E	Q600	4C	Q606	3C	D101	4I	D108	3O	D505	8D
IC201	8C	IC409	7Q	IC607	5G	IC805	10I	Q203	9G	Q503	5F	Q601	4C	Q607	3E	D103	4I	D200	8B	D600	5F
IC300	7I	IC500	5E	IC704	9J	Q100	4Q	Q300	7O	Q504	8E	Q602	5C	Q702	10P	D104	4J	D500	6G	D601	3D
IC401	8Q	IC501	4E	IC800	10E	Q101	3K	Q301	7J	Q505	4E	Q603	6C	Q703	10Q	D105	4M	D501	6G	D801	9F

Component side
Layer 1
Layer 2
Layer 3
Layer 4
Foil side

NXR-810 PC BOARD

RX VCO/PLL UNIT (X58-5090-XX)
-10: K2 -11: K
Component side view (J79-0269-09)

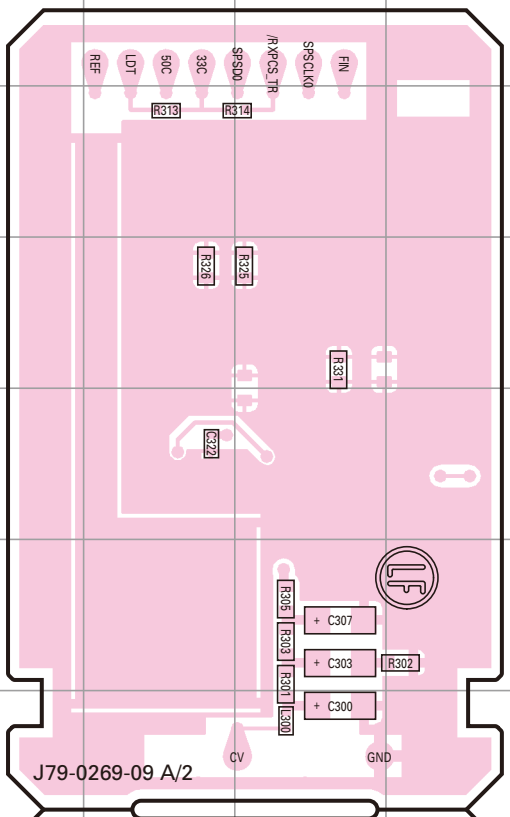

RX VCO/PLL UNIT (X58-5090-XX)
-10: K2 -11: K
Foil side view (J79-0269-09)

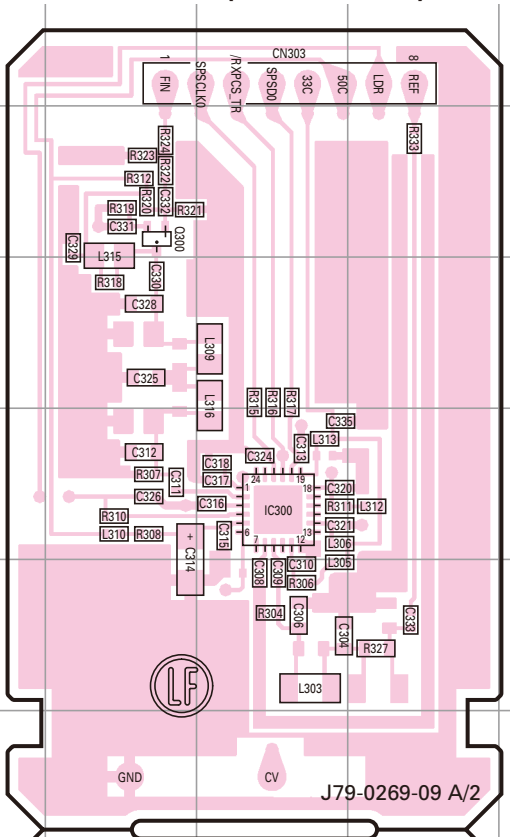

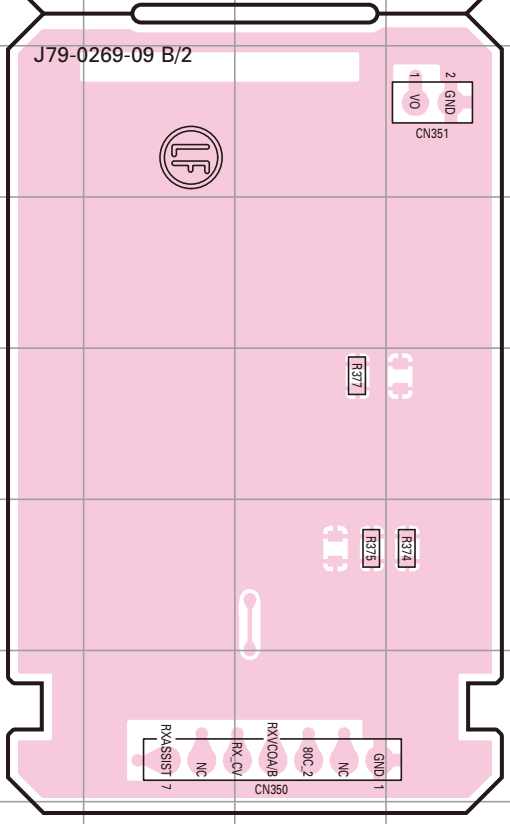

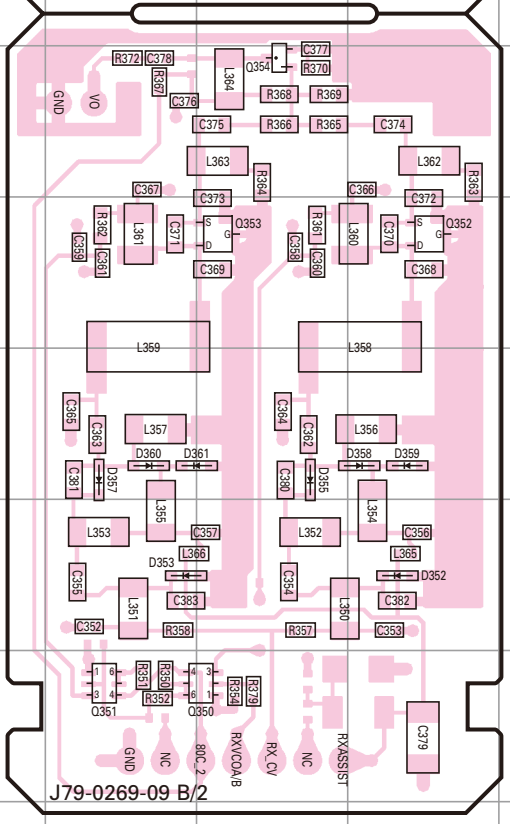

Ref. No.	Address
IC300	5G
Q300	3F
Q350	12G
Q351	12F
Q352	9H
Q353	9G
Q354	8G
D352	11H
D353	11F
D355	10G
D357	10F
D358	10H
D359	10H
D360	10F
D361	10G

Component side
Layer 1
Layer 2
Foil side

Component side
Layer 1
Layer 2
Foil side

PC BOARD NXR-810

TX VCO/PLL UNIT (X58-5100-XX)
-10: K2 -11: K
Component side view (J79-0270-09)

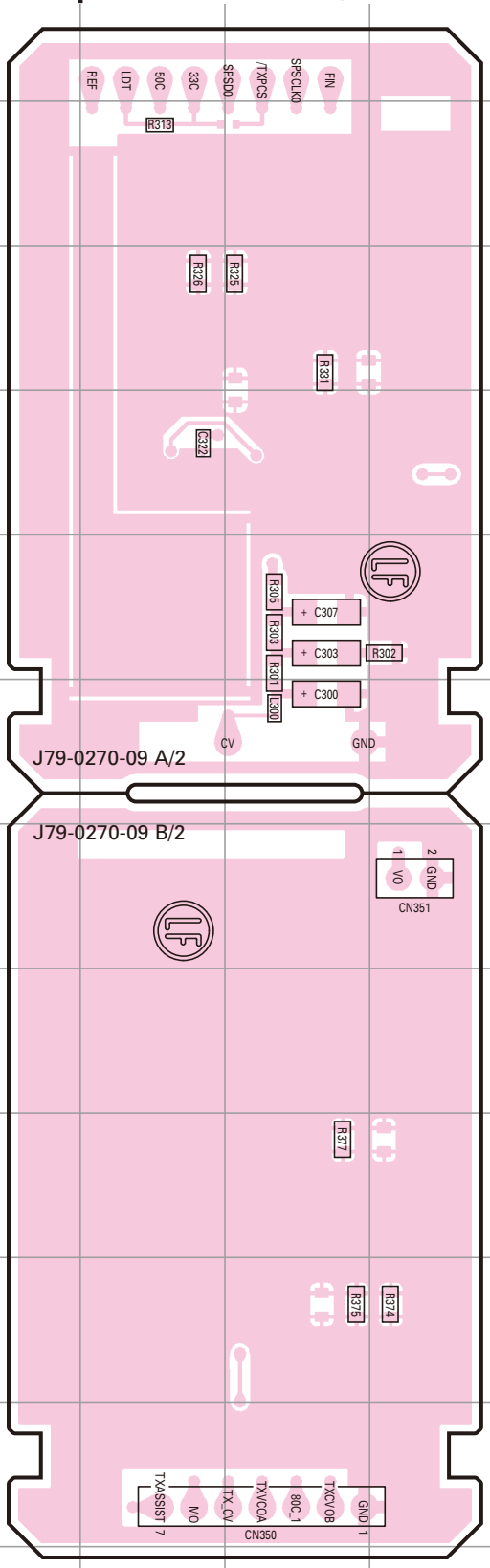

TX VCO/PLL UNIT (X58-5100-XX)
-10: K2 -11: K
Foil side view (J79-0270-09)

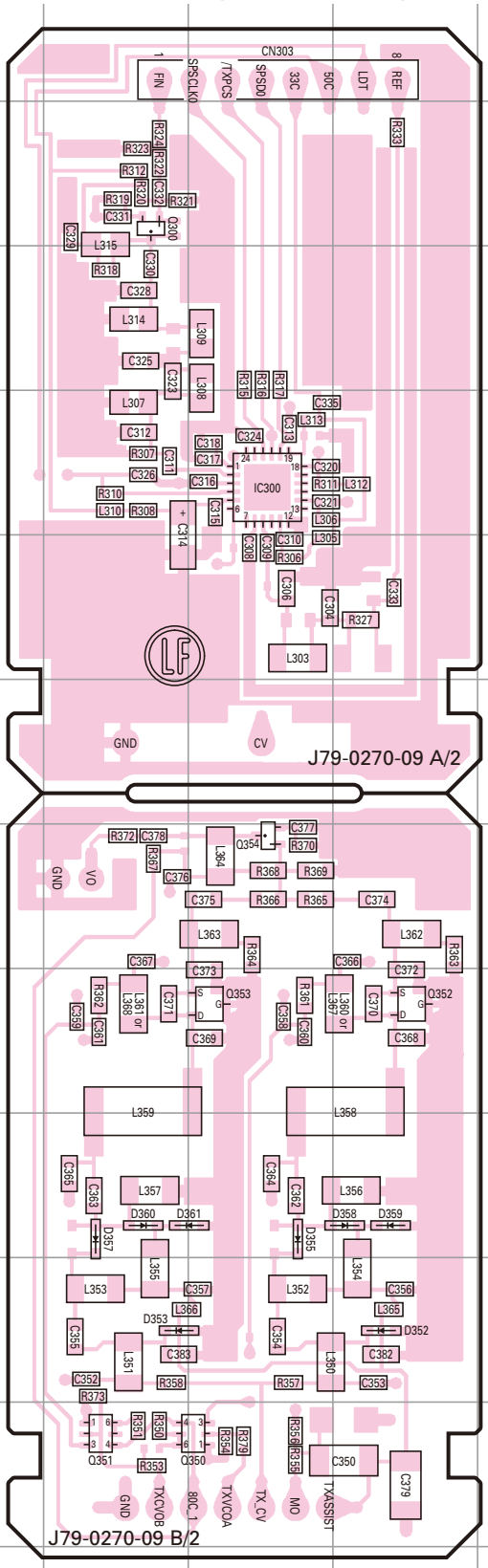

Ref. No.	Address
IC300	5G
Q300	3F
Q350	12G
Q351	12F
Q352	9H
Q353	9G
Q354	8G
D352	11H
D353	11F
D355	10G
D357	10F
D358	10H
D359	10H
D360	10F
D361	10G

Component side
Layer 1
Layer 2
Foil side

Component side
Layer 1
Layer 2
Foil side

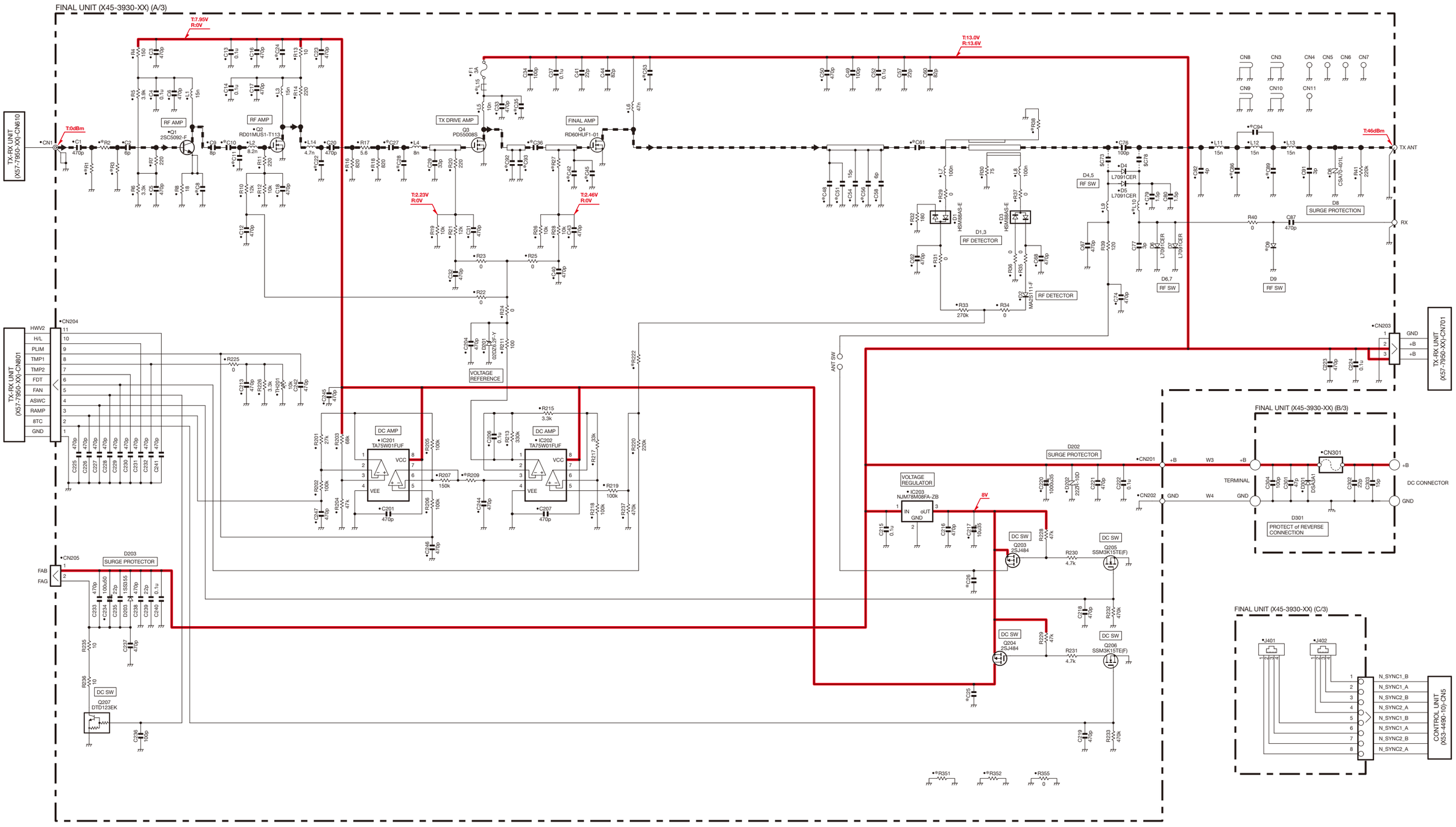

X45-3930-XX (A/3)	C8	C10	C11	C22	C24	C27	C28	C35	C36	C42	C45	C53	C92	C93	L15	R1	R2	R3	R27	R209	R222
-10	K2	470p	12p	NO	12p	NO	6p	6p	NO	39p	39p	39p	NO	15p	NO	180	27	180	100	100k	47k
-11	K	47p	5p(B)	4p(B)	8p(D)	47p	470p	9p	47p	18p	18p	18p	5p	10p	22p	L92-0179-05	270	18	270	220	330k	12k

X45-3930-XX (A/3)	D9	C25	C26	C48	C51	C56	C61	C86	C89	C94	L10	R38	R351	R352
-10	NO	NO	NO	30p	27p	10p	100p	9p	10p	NO	L34-4758-05	82	0	NO
-11	K	HVC131	47p	47p	22p	22p	7p	470p	7p	8p	1p	L34-4743-05	75	NO	0

CONTROL UNIT (KD-165D-13)

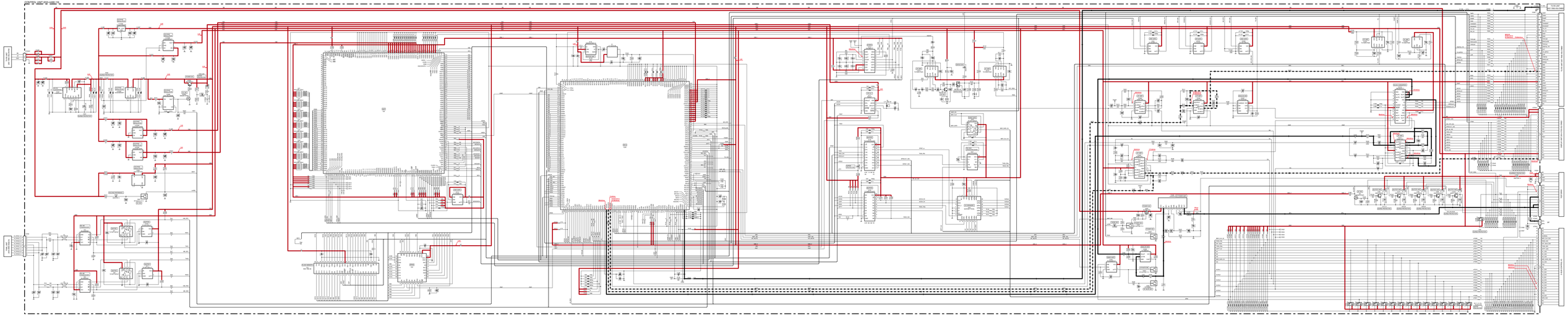

DISPLAY UNIT (X54-3730-20) (A/2)

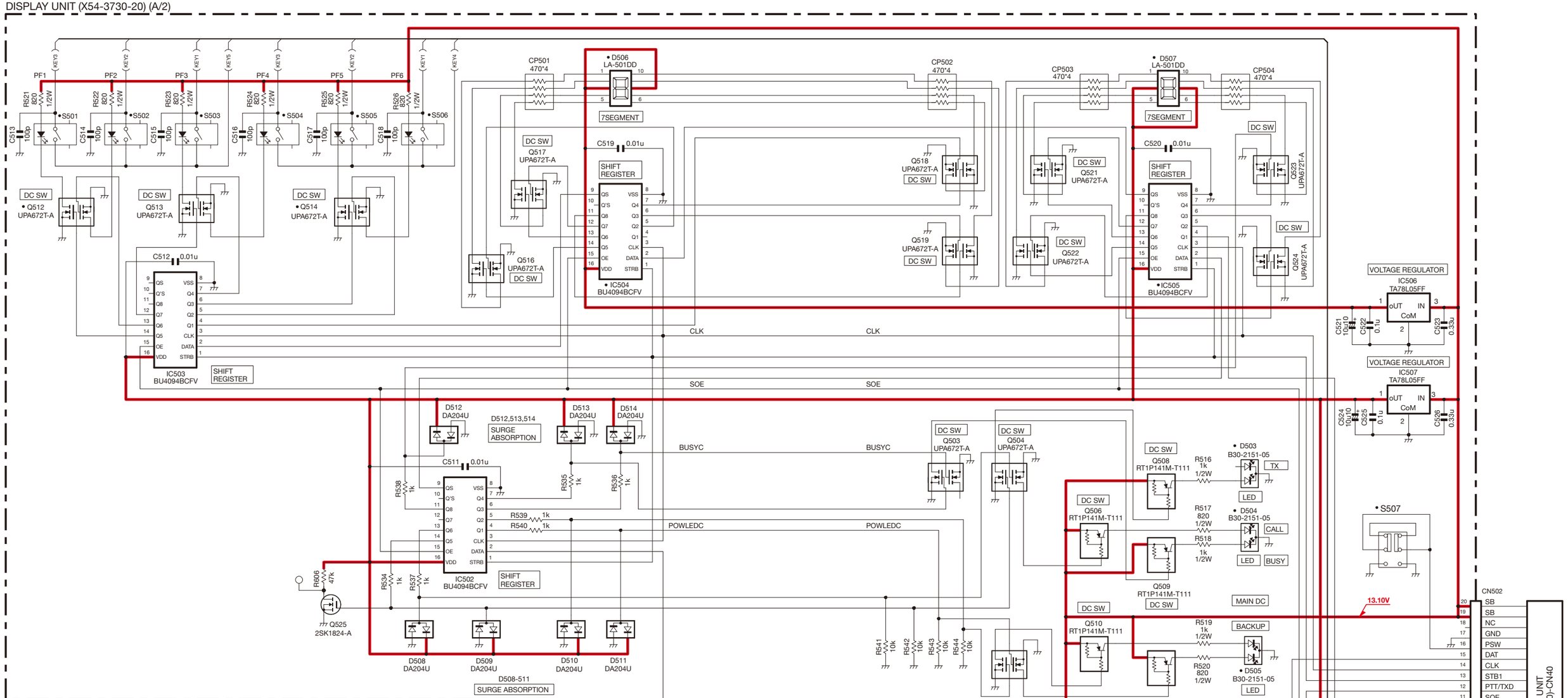

DISPLAY UNIT (X54-3730-20) (B/2)

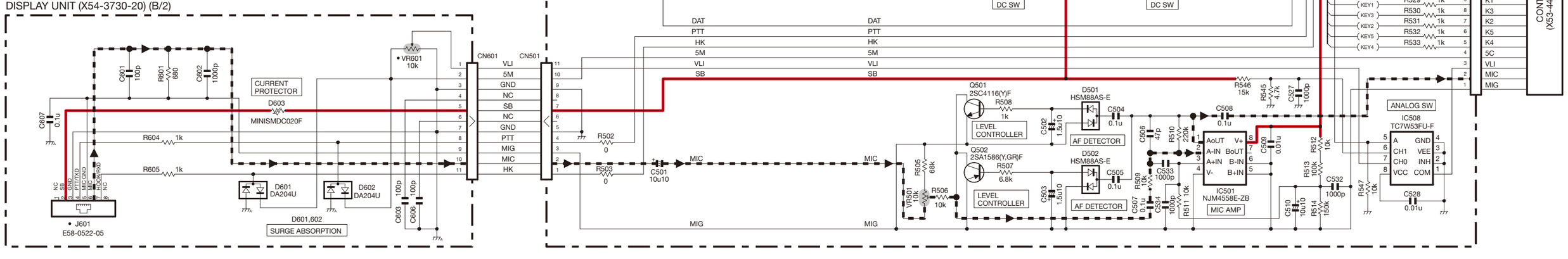

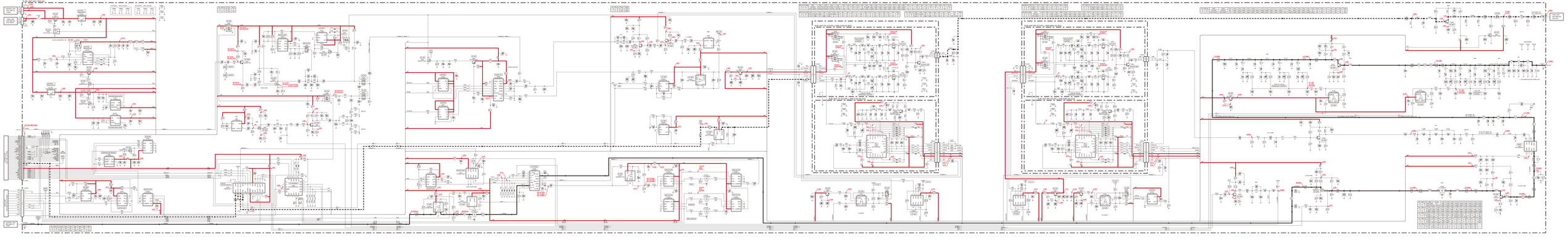

A : N09-2292-05
B : N30-2606-48
C : N30-4006-48
D : N30-4014-48
E : N30-4020-43
F : N32-3006-48
G : N32-4008-43
H : N35-3006-43
J : N35-4006-43
K : N67-3008-48
L : N80-2608-43
M : N87-3005-43
N : N87-3006-48

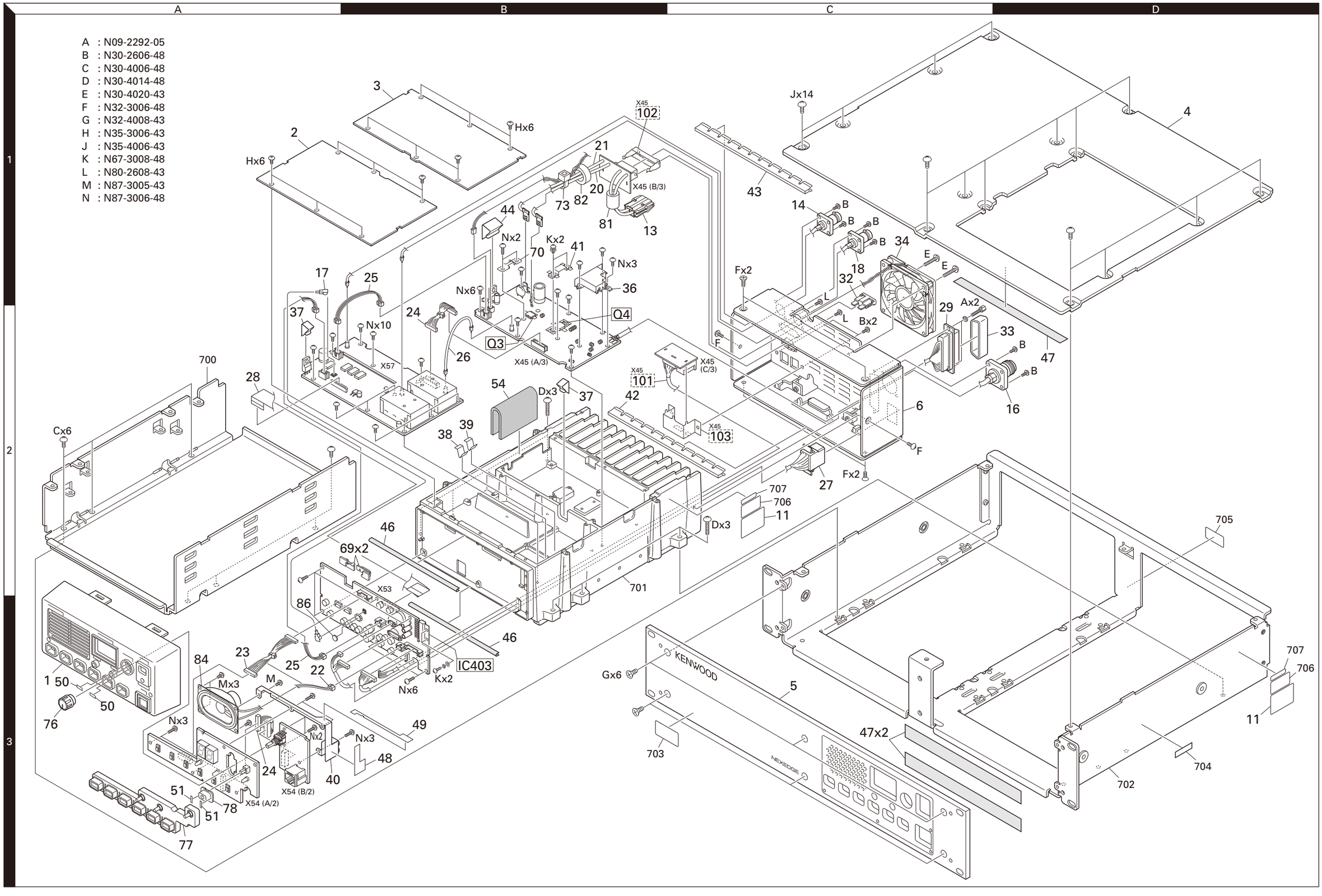

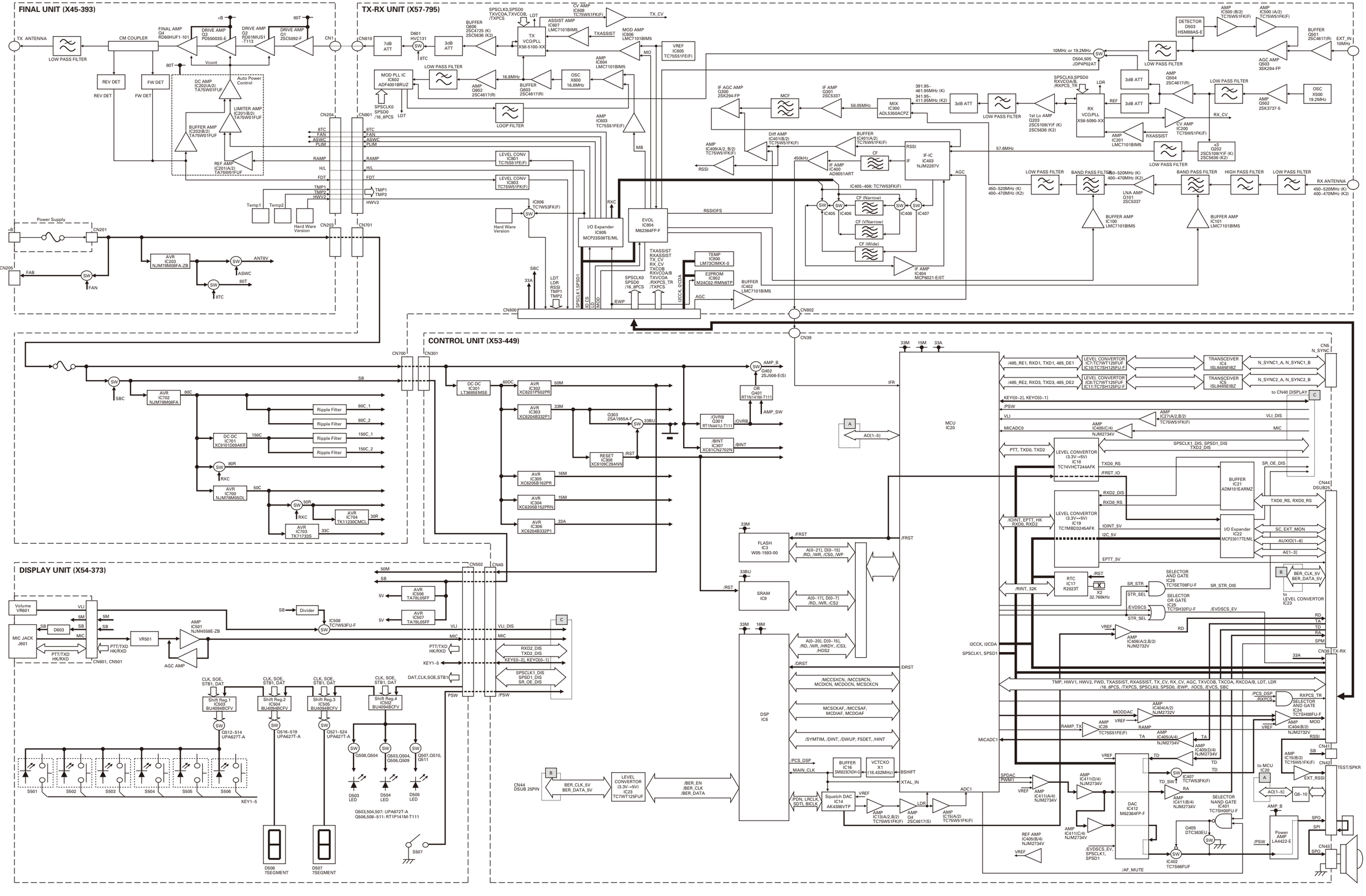
FINAL UNIT (X45-393)
TX-RX UNIT (X57-795)
CONTROL UNIT (X53-449)
DISPLAY UNIT (X54-373)
TX ANTENNA
LOW PASS FILTER
CM COUPLER
FINAL AMP Q4 RD60HUF1-101
DRIVE AMP Q3 PD55003S-E
DRIVE AMP Q2 RD01MUS1 -T113
DRIVE AMP Q1 2SC5092-F
REV DET
FW DET
DC AMP IC202(A/2) TA75W01FUF
Auto Power Control
LIMITER AMP IC201(B/2) TA75W01FUF
BUFFER AMP IC202(B/2) TA75W01FUF
REF AMP IC201(A/2) TA75W01FUF
7dB ATT
D601 HVC131
3dB ATT
BUFFER Q606 2SC4725 (K) 2SC5636 (K2)
TX VCO/PLL X58-5100-XX
ASSIST AMP IC607 LMC7101BIM5
CV AMP IC608 TC75W51FK(F)
MOD AMP IC606 LMC7101BIM5
VREF IC605 TC75S51FE(F)
MOD PLL IC IC602 ADF4001BRUZ
AMP Q602 2SC4617(R)
BUFFER Q603 2SC4617(R)
OSC X600 16.8MHz
AMP IC604 LMC7101BIM5
LOOP FILTER
AMP IC603 TC75S51FE(F)
LEVEL CONV IC801 TC75S51FE(F)
LEVEL CONV IC803 TC75W51FK(F)
IC806 TC7W53FK(F)
Hard Ware Version
Temp1
Temp2
I/O Expander IC805 MCP23S08TE/ML
EVOL IC804 M62364FP-F
TEMP IC800 LM73CIMKX-0
E2PROM IC802 M24C02-RMN6TP
BUFFER IC402 LMC7101BIM5
IF AMP IC404 MCP6021-E/OT
IC405~408: TC7W53FK(F)
CF (Narrow)
CF (VNarrow)
CF (Wide)
IF-IC IC403 NJM2287V
IF AMP IC400 AD8051ART
CF
Diff AMP IC401(B/2) TC75W51FK(F)
BUFFER IC401(A/2) TC75W51FK(F)
AMP IC409(A/2, B/2) TC75W51FK(F)
IF AMP Q301 2SC5337
IF AGC AMP Q300 2SK294-FP
MCF
MIX IC300 ADL5350ACPZ
3dB ATT
LOW PASS FILTER
1st Lo AMP Q203 2SC5108(Y)F (K) 2SC5636 (K2)
RX VCO/PLL X58-5090-XX
CV AMP IC200 TC75W51FK(F)
AMP IC201 LMC7101BIM5
x3 Q202 2SC5108(Y)F (K) 2SC5636 (K2)
DETECTOR D603 HSM88AS-E
AMP IC500 (B/2) TC75W51FK(F)
AMP IC500 (A/2) TC75W51FK(F)
BUFFER Q501 2SC4617(R)
AGC AMP Q503 3SK294-FP
AMP Q504 2SC4617(R)
AMP Q502 2SK3737-5
OSC X500 19.2MHz
EXT_IN 10MHz
10MHz or 19.2MHz
D504,505 JDP4P02AT
BAND PASS FILTER
HIGH PASS FILTER
LNA AMP Q101 2SC5337
BUFFER AMP IC100 LMC7101BIM5
BUFFER AMP IC101 LMC7101BIM5
RX ANTENNA
450~520MHz (K) 400~470MHz (K2)
Power Supply
AVR IC203 NJM78M08FA-ZB
ANT8V
FAB
FAN
ASWC
8TC
AVR IC702 NJM78M08FA
DC-DC IC701 XC9101D09AKR
AVR IC700 NJM78M05DL
AVR IC704 TK11230CMCL
AVR IC703 TK71733S
Ripple Filter
DC-DC IC301 LT3689EMSE
AVR IC302 XC6201P502PR
AVR IC303 XC6204B332P1
AVR IC305 XC6205B162PR
AVR IC304 XC6205B152PRN
AVR IC306 XC6204B332P1
RESET IC308 XC6109C29ANN
RESET IC309 XC6109C29ANN
OR Q401 RT1N141M-T111
/OVRB Q301 RT1N441U-T111
/BINT IC307 XC61CN2702N
AMP_B
AMP_SW
MCU IC20
FLASH IC3 W05-1593-00
SRAM IC9
DSP IC6
RTC IC17 R2023T
X2 32.768kHz
LEVEL CONVERTOR (3.3V→5V) IC18 TC74VHCT244AFK
LEVEL CONVERTOR (3.3V↔5V) IC19 TC7MBD3245AFK
LEVEL CONVERTOR IC7:TC7WT125FUF IC10:TC7SH125FU-F
LEVEL CONVERTOR IC8:TC7WT125FUF IC11:TC7SH125FU-F
TRANSCEIVER IC4 ISL8485EIBZ
TRANSCEIVER IC6 ISL8485EIBZ
BUFFER IC21 ADM101EARMZ
I/O Expander IC22 MCP23017TE/ML
SELECTOR AND GATE IC26 TC7SET08FU-F
SELECTOR OR GATE IC25 TC7SH32FU-F
SELECTOR AND GATE IC24 TC7SH08FU-F
SELECTOR NAND GATE IC401 TC7SH00FU-F
DAC IC412 M62364FP-F
AMP IC411(D/4) NJM2734V
AMP IC411(C/4) NJM2734V
AMP IC411(B/4) NJM2734V
AMP IC411(A/4) NJM2734V
AMP IC405(D/4) NJM2734V
AMP IC405(A/4) NJM2734V
AMP IC404(A/2) NJM2732V
AMP IC404(B/2) NJM2732V
AMP IC406(A/2,B/2) NJM2732V
AMP IC13(A/2,B/2) TC75W51FK(F)
AMP IC15(A/2) TC75W51FK(F)
AMP IC15(B/2) TC75W51FK(F)
Squelch DAC IC14 AK4386VTP
VCTCXO X1 (18.432MHz)
BUFFER IC16 SM5023CNDH-G
Q405 DTC363EU
Power AMP LA4422-E
CN44 DSUB 25PIN
BER_CLK_5V BER_DATA_5V
LEVEL CONVERTOR (3.3V→5V) IC23 TC7WT125FUF
/BER_EN /BER_CLK /BER_DATA
Volume VR601
MIC JACK J601
D603
VR501
AMP IC501 NJM4558E-ZB
AGC AMP
Divider
IC508 TC7W53FU-F
AVR IC506 TA78L05FF
AVR IC507 TA78L05FF
Shift Reg.1 IC501 BU4094BCFV
Shift Reg.2 IC504 BU4094BCFV
Shift Reg.3 IC505 BU4094BCFV
Shift Reg.4 IC502 BU4094BCFV
Q512~514 UPA627T-A
Q516~519 UPA627T-A
Q521~524 UPA627T-A
Q508,Q504
Q503,Q504, Q506,Q509
Q507,Q510, Q511
D503 LED
D504 LED
D505 LED
Q503,504,507: UPA627T-A
Q506,508~511: RT1P141M-T111
S501
S502
S503
S504
S505
S506
KEY1~5
S507
D506 7SEGMENT
D507 7SEGMENT
CN601, CN501
CN502
CN40
CN800
CN802
CN39
CN700
CN301
CN203
CN701
CN205
CN201
CN1
CN610
CN801
CN204
CN44 DSUB25
CN38
CN43
CN41
CN42
CN5 N_SYNC
TX-RX
TEST/SPKR
to CN40 DISPLAY
to LEVEL CONVERTOR IC23
to MCU IC20
/485_RE1, RXD1, TXD1, 485_DE1
/485_RE2, RXD3, TXD3, 485_DE2
N_SYNC1_A, N_SYNC1_B
N_SYNC2_A, N_SYNC2_B
KEYI[0~2], KEYO[0~1]
/PSW
VLI
MICADC0
PTT, TXD0, TXD2
/IOINT, EPTT, HK RXD0, RXD2
/RINT, 32K
/EVDSCS_EV
/AF_MUTE
/EVDSCS_EV, SPSCLK1, SPSD1
I2CCK, I2CDA
SPSCLK1, SPSD1
TMP, HWV1, HWV2, FWD, TXASSIST, RXASSIST, TX_CV, RX_CV, AGC, TXVCOB, TXCOA, RXCOA/B, LDT, LDR /16_8PCS, /TXPCS, SPSCLK0, SPSD0, /EWP, /IOCS, /EVCS, SBC
/PCS_DSP MAIN_CLK
/PDN, LRCLK, SDTI, BICLK
SPDAC PWM1
MICADC1
ADC1
BSHIFT
XTAL_IN
/FRST
/DRST
/RST
/RINT, 32K
/EVDSCS_EV
/EVDSCS_EV

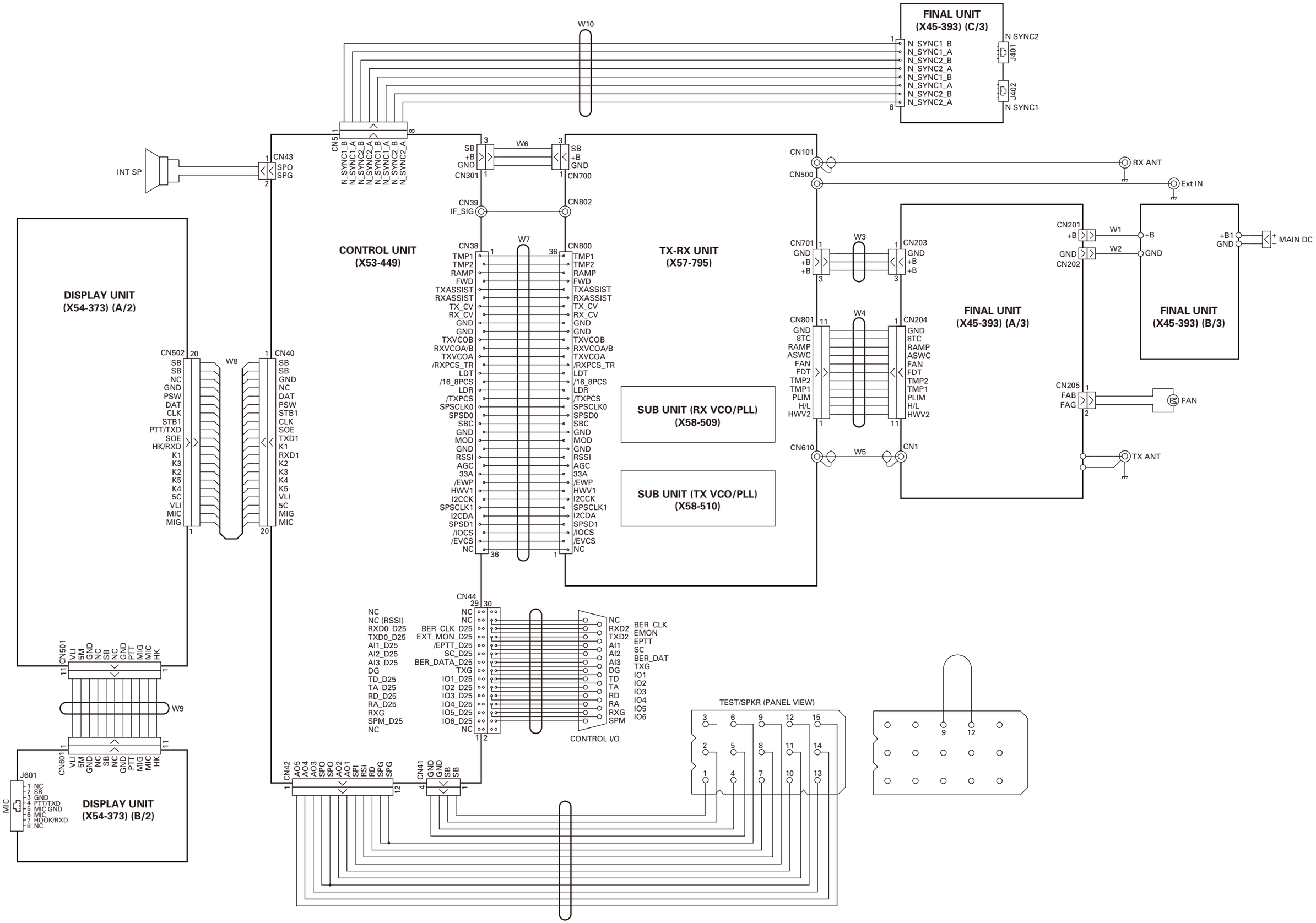
FINAL UNIT
(X45-393) (C/3)
N SYNC2
N SYNC1
J401
J402
W10
CN5
N_SYNC1_B
N_SYNC1_A
N_SYNC2_B
N_SYNC2_A
N_SYNC1_B
N_SYNC1_A
N_SYNC2_B
N_SYNC2_A
INT SP
CN43
SPO
SPG
CN301
SB
+B
GND
W6
CN700
CN39
IF_SIG
CN802
CN101
CN500
RX ANT
Ext IN
CONTROL UNIT
(X53-449)
TX-RX UNIT
(X57-795)
CN38
CN800
W7
TMP1
TMP2
RAMP
FWD
TXASSIST
RXASSIST
TX_CV
RX_CV
GND
TXVCOB
RXVCOA/B
TXVCOA
/RXPCS_TR
LDT
/16_8PCS
LDR
/TXPCS
SPSCLK0
SPSD0
SBC
MOD
RSSI
AGC
33A
/EWP
HWV1
I2CCK
SPSCLK1
I2CDA
SPSD1
/iOCS
/EVCS
NC
SUB UNIT (RX VCO/PLL)
(X58-509)
SUB UNIT (TX VCO/PLL)
(X58-510)
CN701
W3
CN203
CN801
W4
CN204
8TC
ASWC
FAN
PLIM
H/L
HWV2
CN610
W5
CN1
FINAL UNIT
(X45-393) (A/3)
CN201
W1
W2
CN202
+B1
MAIN DC
FINAL UNIT
(X45-393) (B/3)
CN205
FAB
FAG
FAN
TX ANT
DISPLAY UNIT
(X54-373) (A/2)
CN502
W8
CN40
PTT/TXD
HK/RXD
K1
K3
K2
K5
K4
5C
VLI
MIC
MIG
TXD1
RXD1
STB1
CN501
W9
CN601
J601
MIC
DISPLAY UNIT
(X54-373) (B/2)
CN44
NC (RSSI)
RXD0_D25
TXD0_D25
AI1_D25
AI2_D25
AI3_D25
DG
TD_D25
TA_D25
RD_D25
RA_D25
RXG
SPM_D25
BER_CLK_D25
EXT_MON_D25
/EPTT_D25
SC_D25
BER_DATA_D25
TXG
IO1_D25
IO2_D25
IO3_D25
IO4_D25
IO5_D25
IO6_D25
RXD2
TXD2
AI1
AI2
AI3
TD
TA
RD
RA
RXG
SPM
BER_CLK
EMON
EPTT
SC
BER_DAT
TXG
IO1
IO2
IO3
IO4
IO5
IO6
CONTROL I/O
CN42
AO5
AO4
AO3
SPO
AO2
AO1
SPI
RSi
RD
SPG
CN41
GND
SB
TEST/SPKR (PANEL VIEW)