KENWOOD

Document Copyrights

Copyright 2006 by Kenwood Corporation. All rights reserved.

No part of this manual may be reproduced, translated, distributed, or transmitted in any form or by any means, electronic, mechanical, photocopying, recording, or otherwise, for any purpose without the prior written permission of Kenwood.

Disclaimer

While every precaution has been taken in the preparation of this manual, Kenwood assumes no responsibility for errors or omissions. Neither is any liability assumed for damages resulting from the use of the information contained herein. Kenwood reserves the right to make changes to any products herein at any time for improvement purposes.

UHF FM TRANSCEIVER

TK-3170/3173

SERVICE MANUAL

REVISED

KENWOOD

Kenwood Corporation

© 2005-6 PRINTED IN JAPAN
B51-8721-10 (N) 1390

TK-3170 K4,K6,M,M3

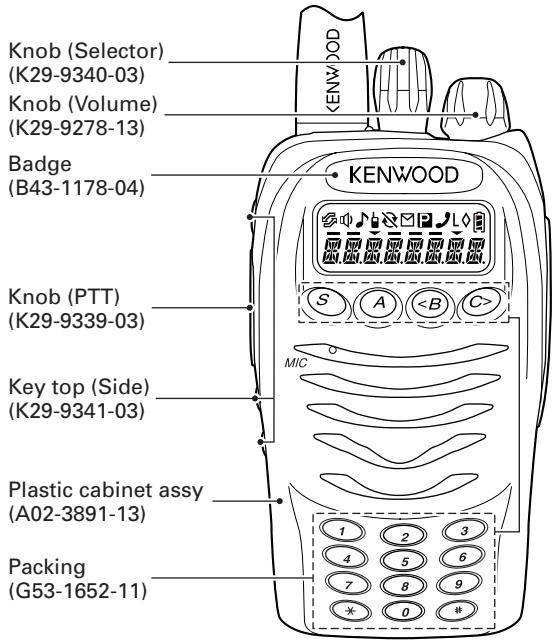

TK-3170 K,K3/TK-3173 K

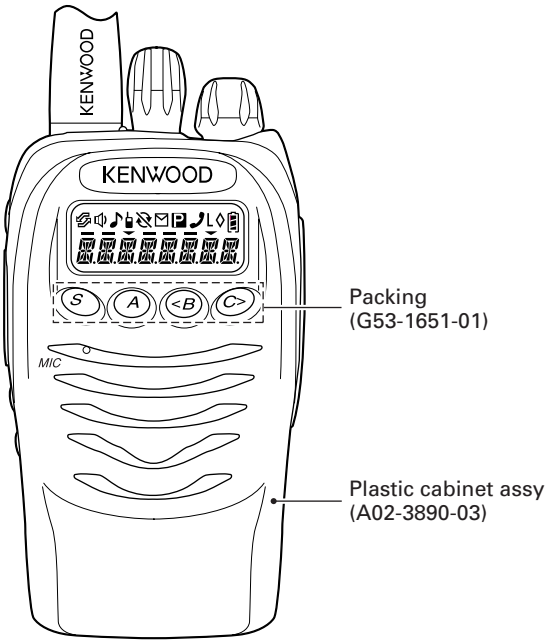

Does not come with antenna.
Antenna is available as an option.

CONTENTS

GENERAL 2
SYSTEM SET-UP 2
REALIGNMENT 3
DISASSEMBLY FOR REPAIR 21
CIRCUIT DESCRIPTION 23
SEMICONDUCTOR DATA 28
COMPONENTS DESCRIPTION 29
PARTS LIST 31
EXPLODED VIEW 41
PACKING 42
ADJUSTMENT 43
TERMINAL FUNCTION 51
PC BOARD
TX-RX UNIT (X57-7010-XX) (A/4) 52
TX-RX UNIT (X57-7010-XX) (B,C,D/4) 54
SCHEMATIC DIAGRAM 58
BLOCK DIAGRAM 66
LEVEL DIAGRAM 68
KSC-30 (RAPID CHARGER) 69
SPECIFICATIONS ..... BACK COVER

This product uses Lead Free solder.

GENERAL / SYSTEM SET-UP

INTRODUCTION

SCOPE OF THIS MANUAL

This manual is intended for use by experienced technicians familiar with similar types of commercial grade communications equipment. It contains all required service information for the equipment and is current as of the publication date. Changes which may occur after publication are covered by either Service Bulletins or Manual Revisions. These are issued as required.

ORDERING REPLACEMENT PARTS

When ordering replacement parts or equipment information, the full part identification number should be included. This applies to all parts : components, kits, or chassis. If the part number is not known, include the chassis or kit number of which it is a part, and a sufficient description of the required component for proper identification.

PERSONAL SAFETY

The following precautions are recommended for personnel safety:

- DO NOT transmit until all RF connectors are verified secure and any open connectors are properly terminated.
- SHUT OFF and DO NOT operate this equipment near electrical blasting caps or in an explosive atmosphere.
- This equipment should be serviced by a qualified technician only.

SERVICE

This radio is designed for easy servicing. Refer to the schematic diagrams, printed circuit board views, and alignment procedures contained within.

Service Manual List

Title	Parts number	Remarks	Market code	TX-RX unit number
TK-3170/ TK-3173	B51-8721-00		K,K4 K	X57-7010-XX J72-0964-09
TK-3170/ TK-3173	B51-8721-10	This service manual	K,K3,K4,K6,M,M3 K	X57-7010-XX J72-0964-19

SYSTEM SET-UP

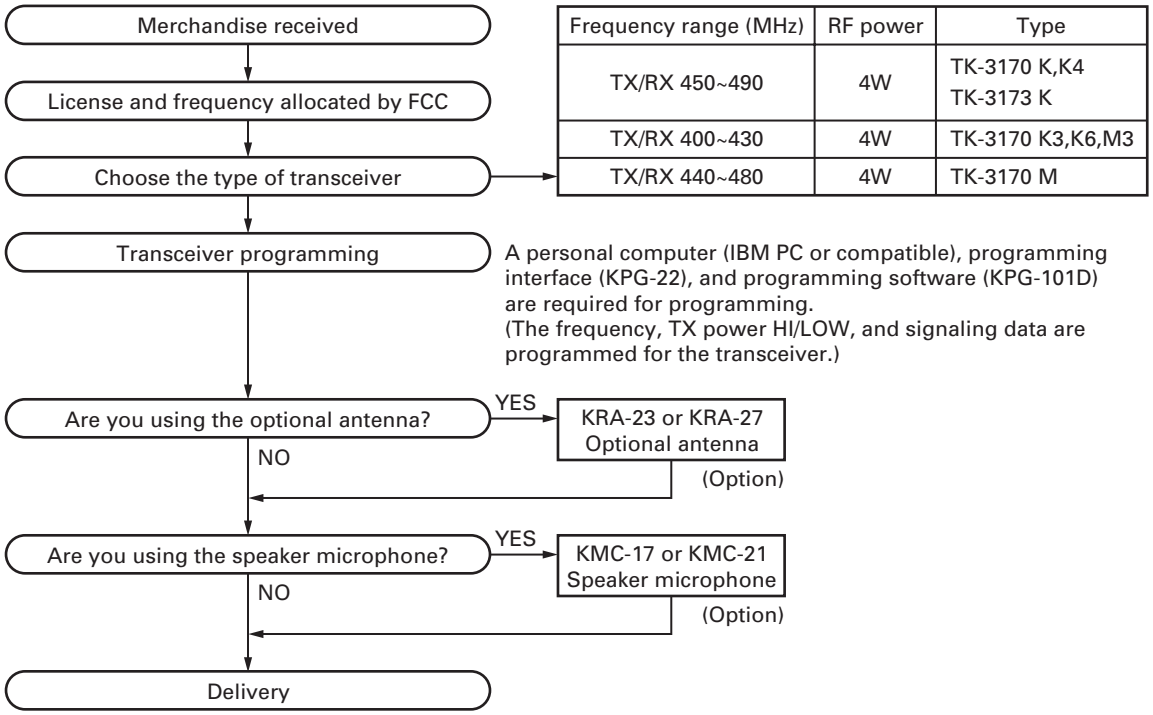

Frequency range (MHz)	RF power	Type
TX/RX 450~490	4W	TK-3170 K,K4 TK-3173 K
TX/RX 400~430	4W	TK-3170 K3,K6,M3
TX/RX 440~480	4W	TK-3170 M

REALIGNMENT

1. Modes

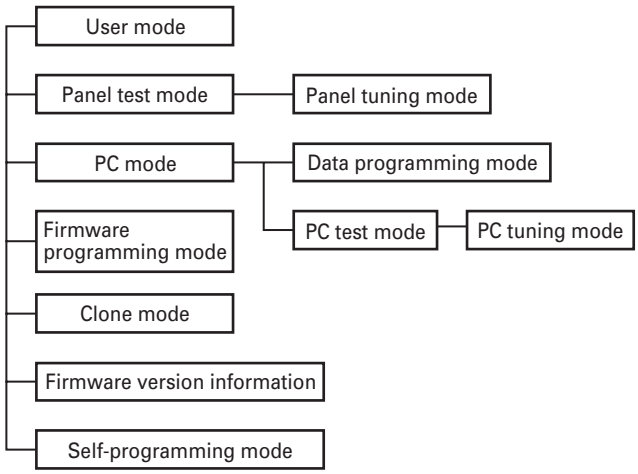

Mode	Function
User mode	For normal use.
Panel test mode	Used by the dealer to check the fundamental characteristics.
Panel tuning mode	Used by the dealer to tune the transceiver.
PC mode	Used for communication between the transceiver and PC (IBM compatible).
Data programming mode	Used to read and write frequency data and other features to and from the transceiver.
PC test mode	Used to check the transceiver using the PC. This feature is included in the FPU. See panel tuning.
Firmware programming mode	Used when changing the main program of the flash memory.
Clone mode	Used to transfer programming data from one transceiver to another.
Firmware version information	Used to confirm the internal firmware version.
Self-programming mode	You can program the frequency signaling and other function using only the transceiver.

2. How to Enter Each Mode

Mode	Operation
User mode	Power ON
Panel test mode	[A] + Power ON
PC mode	Received commands from PC
Panel tuning mode	[Panel test mode] + [S]
Firmware programming mode	[Side2] + Power ON
Clone mode	[B] + Power ON
Firmware version information	[Side1] + Power ON
Self-programming mode	[C] + Power ON

3. Panel Test Mode

Setting method refer to ADJUSTMENT.

4. Panel Tuning Mode

Setting method refer to ADJUSTMENT.

5. PC Mode

5-1. Preface

The transceiver is programmed by using a personal computer, programming interface (KPG-22) and programming software (KPG-101D).

The programming software can be used with an IBM PC or compatible. Figure 1 shows the setup of an IBM PC for programming.

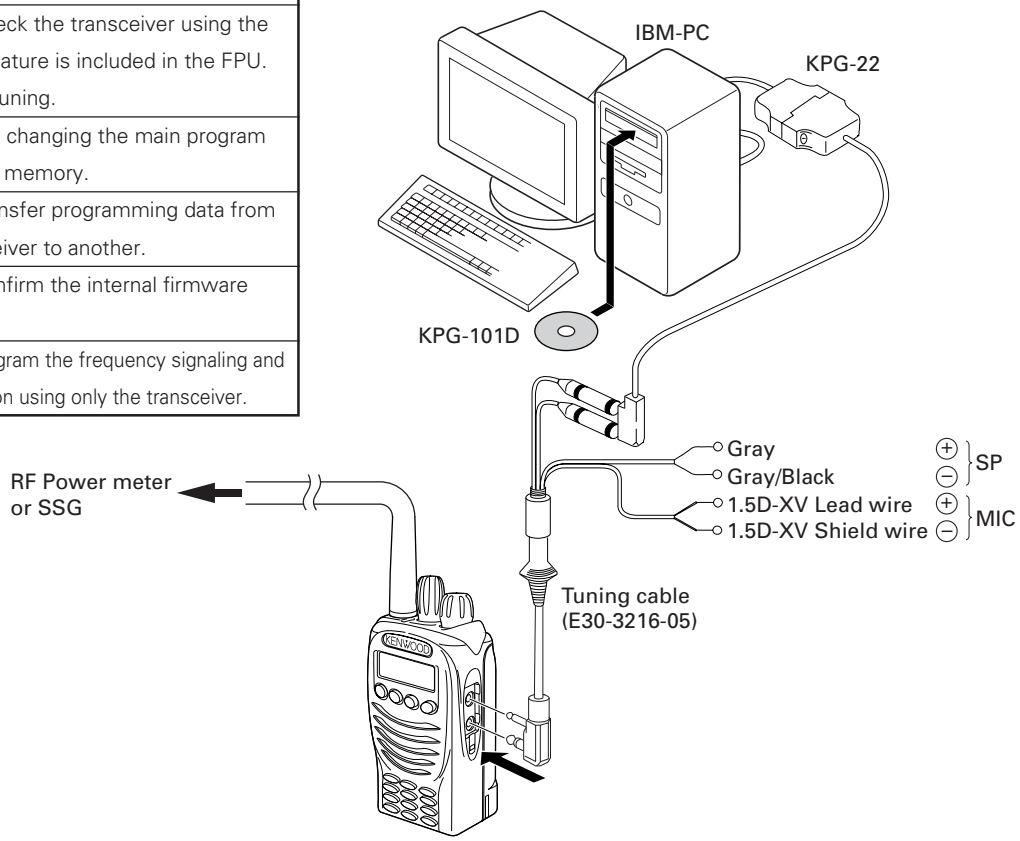

Fig. 1

REALIGNMENT

5-2. Connection Procedure

1. Connect the transceiver to the personal computer with the interface cable.
2. When the POWER switch on, user mode can be entered immediately. When PC sends command the transceiver enter PC mode, and "PROGRAM" is displayed on the LCD.
   When data transmitting from transceiver, the red LED is lights.
   When data receiving to transceiver, the green LED is lights.

Note:

The data stored in the personal computer must match model type, when it is written into the flash memory.

5-3. KPG-22 Description (PC programming interface cable: Option)

The KPG-22 is required to interface the transceiver to the computer. It has a circuit in its D-subconnector (25-pin) case that converts the RS-232C logic level to the TTL level.

The KPG-22 connects the SP/MIC connector of the transceiver to the computers RS-232C serial port.

5-4. Programming Software KPG-101D Description

The KPG-101D is the programming software for the transceiver supplied on a CD-ROM. This software runs under MS-Windows 98, ME, Windows 2000 or XP on an IBM-PC or compatible machine.

The data can be input to or read from the transceiver and edited on the screen. The programmed or edited data can be printed out. It is also possible to tune the transceiver.

6. Firmware Programming Mode

6-1. Preface

Flash memory is mounted on the transceiver. This allows the transceiver to be upgraded when new features are released in the future. (For details on how to obtain the firmware, contact Customer Service.)

6-2. Connection Procedure

Connect the transceiver to the personal computer (IBM PC or compatible) with the interface cable (KPG-22). (Connection is the same as in the PC Mode.)

6-3. Programming

1. Start up the firmware programming software (Fpro.exe).
2. Set the communications speed (normally, 115200 bps) and communications port in the configuration item.
3. Set the firmware to be updated by File name item.
4. Turn the transceiver power ON with the [Side2] key held down. Then, the orange LED on the transceiver lights and "PROG 1152" is displayed.
5. Check the connection between the transceiver and the personal computer, and make sure that the transceiver is in the Program mode.
6. Press write button in the window. When the transceiver starts to receive data, the "LOADING" is displayed.
7. If writing ends successfully, the checksum is calculated and a result is displayed.
8. If you want to continue programming other transceivers, repeat steps 4 to 7.

Note:

This mode cannot be entered if the Firmware Programming mode is set to Disable in the Programming software.

6-4. Function

1. If you press the [Side2] key while "PROG 1152" is displayed, the display changes to "PROG 192" to indicate that the write speed is low speed (19200 bps). If you press the [Side2] key again while "PROG 192" is displayed, the display changes to "PROG 384". If you press the [Side2] key again while "PROG 384" is displayed, the display changes to "PROG 576". If you press the [Side2] key again while "PROG 576" is displayed, the display returns to "PROG 1152".
2. If you press the [Side1] key while "PROG 1152" is displayed, the checksum is calculated, and a result is displayed. If you press the [Side1] key again while the checksum is displayed, "PROG 1152" is redisplayed.

Note:

Normally, write in the high-speed mode.

7. Clone Mode

Programming data can be transferred from one transceiver to another by connecting them via their SP/MIC connectors. The operation is as follows (the transmit transceiver is the master and the receive transceiver is a slave).

The following data cannot be cloned.

- Tuning data
- Embedded message with password
- Serial number

The "password" of description by explanation of 1. to 7. are "Read Authorization Password".

1. Turn the master transceiver power ON with the [B] key held down. If the Data password is set to the transceiver, the transceiver displays "CLN LOCK". If the password is not set, the transceiver displays "CLONE".
2. When you enter the correct password, and "CLONE" is displayed, the transceiver can be used as the cloning master. The following describes how to enter the password.
3. **How to enter the password with the keypad;**
   If you press a key while "CLN LOCK" is displayed, the number that was pressed is displayed on the transceiver. Each press of the key shifts the display in order to the left. When you enter the password and press the [*] or [S] key, "CLONE" is displayed if the entered password is correct. If the password is incorrect, "CLN LOCK" is redisplayed.

REALIGNMENT

How to enter the password with the selector;
If the selector is rotated while "CLN LOCK" is displayed, numbers (0 to 9) are displayed flashing. When you press the [C] key, the currently selected number is determined. If you press the [S] key after entering the password in this procedure, "CLONE" is displayed if the entered password is correct. If the password is incorrect, "CLN LOCK" is redisplayed.

4. Power on the slave transceiver.
5. Connect the cloning cable (part No. E30-3410-05) to the SP/MIC connectors on the master and slave.
6. Press the [S] key on the master while the master displays "CLONE". The data of the master is sent to the slave. While the slave is receiving the data, "PROGRAM" is displayed. When cloning of data is completed, the master displays "END", and the slave automatically operates in the User mode. The slave can then be operated by the same program as the master.
7. The other slave can be continuously cloned. When the [S] key on the master is pressed while the master displays "END", the master displays "CLONE". Carry out the operation in step 4 to 6.

Notes:

Cannot be cloned if the password (over write password) is programmed to the slave.
Only the same models can be cloned together.

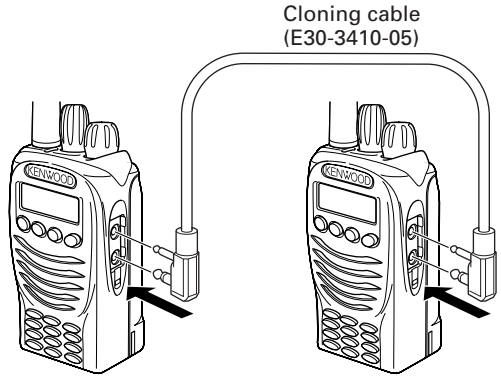

Fig. 2

8. Self-Programming Mode

This mode allows you to write the frequency data and signaling, etc. to the equipment. This mode is to be used ONLY by authorized service personnel who are maintaining the user's equipment. After programming, reset the FPU to disable "Self- Programming" mode. Transceivers CANNOT be delivered to the end-user with self-programming mode enabled.

8-1. Entering Self-Programming Mode

Remove D14 on the control unit (X57 B/4) first. (K, K3, K4 and K6 only)

1. Press and hold the [C] key for 2 seconds while turning the power on.
2. When self-programming mode is enabled, " SELF " appears on the display.

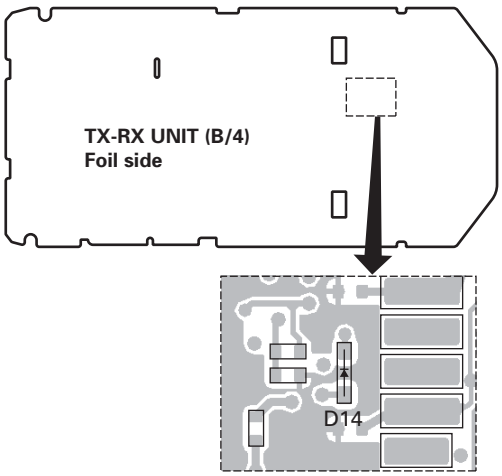

Fig. 3

8-2. Adding a Data Password

If a data password is set in the optional feature menu, you must enter the password to activate self-programming mode.

The password can consist of 6 digits, ranging from 0~9.

■ To enter the password using the keypad:

1. Press a key while "SLF.LOCK.R" or "SLF.LOCK.W" is displayed. The number that was pressed will appear on the display.
2. Each press of the key shifts the display in order to the left.
3. When you have entered the entire password, press the [✱] or [S] key. "SELF" appears on the display if the entered password is correct. If the password is incorrect, "SLF.LOCK.R" or "SLF.LOCK.W" is redisplayed.

■ To enter the password using the selector:

1. Rotate the selector while "SLF.LOCK.R" or "SLF.LOCK.W" is displayed. A number (0 to 9) will appear on the display and flash.
2. Press the [C] key. The currently selected number is set.
3. When you have entered the entire password, press the [S] key. "SELF" appears on the display if the entered password is correct. If the password is incorrect, "SLF.LOCK.R" or "SLF.LOCK.W" is redisplayed.

Notes:

- Self-programming mode cannot be set when it has been disabled by the FPU.
- Self-programming mode for the TK-3173 or TK-3170 (M, M3) transceiver cannot be enabled by the FPU when the transceiver is set up for Trunking System Data.

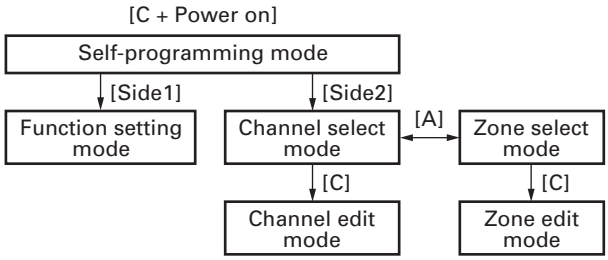

REALIGNMENT

8-3. Zone/Channel Select Mode

■ To enable Zone/Channel select mode

1. Press the [Side2] key when "SELF" is displayed. The transceiver enters Channel Select Mode. On the left half of the display, the zone number is displayed. On the right half of the display, the channel number is displayed.
2. Each press of the [A] key changes the position of the "▼" indicator between the zone select (left side) and the channel select (right side).
3. Rotate the selector to set the zone or channel number, depending on the location or the "▼" indicator.

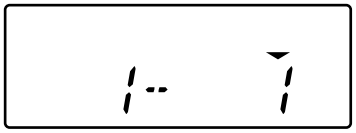

■ Channel edit mode

1. Press the [A] key so that the "▼" indicator is located on the right side, above the channel number.
2. Rotate the selector select your desired channel number.
3. Press the [C] key to enter Channel Edit Mode.
4. Press the [C] key again to select the setting you wish to modify.
5. Rotate the selector to select the desired value.
6. Press the [B] key to store the value in memory and advance to the next setting.
7. Press the [C] key to skip any settings you do not wish to modify.
8. Press the [S] key to exit. "SELF" appears on the display.

No.	Function	Choices	Display	Remarks
Zone/Channel Setting Mode				
	Select Channel	1~128	▼ 1 - 1	[A] : Zone Selection/Channel Selection change
			▼ 1 - 1 2 8	
	Select Zone	1~128	▼ 1 - 1	
			▼ 1 2 8 - 1	
Channel Edit				
1	RX Frequency	Step 5.0kHz	S T P _ _ 5 0 0	Display when an item is selected or when a step is changed (about 0.5 seconds) [A] : Step change, Default=6.25kHz
		Step 6.25kHz	S T P _ _ 6 2 5	
		Step 1MHz	S T P _ _ _ 1 M	
		Blank	R.– – – – – – –	[Side1] : Freq On/Blank switching
		327.0000~550.0000MHz	R.4 5 0. 0 0 0 0	The rightmost dot indicates 50Hz digit (On=5; Off=0)
2	RX Signaling	OFF	– – – – – – – –	[Side1] : Off/QT/DQT switching [A] : Mode switching [Side2] : Normal/Inverse switching Default=OFF
		QT 67.0~250.3Hz (EIA Mode)	Q T _ _ 6 7.0 _	
			Q T _ 2 5 0.3 _	
		QT 67.0~254.1Hz (0.1Hz Step Mode)	Q T _ _ 6 7.0 *	
			Q T _ 2 5 4.1 *	
		DQT 023~754 Normal (Standard Table Mode)	D Q T 0 2 3 N _	
			D Q T 7 5 4 N _	
		DQT 000~777 Normal (1 Step Mode)	D Q T 0 0 0 N *	
			D Q T 7 7 7 N *	

REALIGNMENT

No.	Function	Choices	Display	Remarks
		DQT 023~754 Inverse	DQT 023 I _	
		(Standard Table Mode	DQT 754 I _	
		DQT 000~777 Inverse	DQT 000 I *	
		(1 Step Mode)	DQT 777 I *	
3	TX Frequency	Step 5.0kHz	STP _ _ 500	Same as RX frequency
		Step 6.25kHz	STP _ _ 625	
		Step 1MHz	STP _ _ _ 1M	
		Blank	T.– – – – – – –	Same as RX frequency
		327.0000~550.0000MHz	T.450.0000	Same as RX frequency
4	TX Signaling	OFF	– – – – – – – –	Same as RX signaling
		QT 67.0~250.3Hz	QT _ _ 67.0 _	
		(EIA Mode)	QT _ 250.3 _	
		QT 67.0~254.1Hz	QT _ _ 67.0 *	
		(0.1Hz Step Mode)	QT _ 254.1 *	
		DQT 023~754 Normal	DQT 023 N _	
		(Standard Table Mode)	DQT 754 N _	
		DQT 000~777 Normal	DQT 000 N *	
		(1 Step Mode)	DQT 777 N *	
		DQT 023~754 Inverse	DQT 023 I _	
		(Standard Table Mode)	DQT 754 I _	
		DQT 000~777 Inverse	DQT 000 I *	
		(1 Step Mode)	DQT 777 I *	
5	Option Signaling	OFF	OP _ OFF _ _	←Default
		DTMF	OP _ DTMF _	
		2-tone	OP _ 2TON1	
			OP _ 2TON2	
			OP _ 2TON3	
		FleetSync	OP _ FLSY _	
6	ID	DTMF Signaling = Code SQ	_ _ _ I D _ _ _	Display when an item is selected
		000~9999999999		(about 0.5 seconds)
		DTMF Signaling = Selective Call	1 2 3 4 5 6 7 8	Display of the current setting
		000~9999		(If it is 8 or more digits, scroll it)
			– – – – – 1 2 3	Display when a code is input
				(Input it with DTMF key)
		Code Default	_ _ _ _ _ 0 0 0	[Side1] : Data clear
7	Transmit Power	High Transmit Power	PWR _ H _ _ _	←Default
		Low Transmit Power	PWR _ L _ _ _	
8	Wide/Narrow	Wide	WIDE _ _ _ _	←Default
		Narrow	NARROW_ _	

REALIGNMENT

No.	Function	Choices	Display	Remarks
9	Busy Channel Lockout	No	BCL_NO__	←Default
		QT/DQT Tone	BCL_QT__	
		Option Signaling	BCL_OPT_	
		Carrier Only	BCL_CARR	
10	Scan Delete/Add	Add	SCAN_ADD	←Default
		Delete	SCAN_DEL	
11	Beat Shift	NO	SHFT_NO_	←Default
		YES	SHFT_YES	
12	Compander	NO	COMP_NO_	←Default
		YES	COMP_YES	
13	Priority Channel	NO	PRCH_NO_	←Default
		YES	PRCH_YES	
14	Home Channel	NO	HMCH_NO_	Current zone outside cannot be set up
		YES	HMCH_YES	Default=NO
15	Direct Channel	NO	DIRCT_NO	Default=NO
		1~4	DIRCT__1	
16	PTT ID	OFF	PID_OFF_	Default=OFF
		Beginning of Transmit	PID_BOT_	
		End of Transmit	PID_EOT_	
		Both	PID_BOTH	
17	Beginning of Transmit	Code which it can input, 0~9, A~D, ∗ and #, maximum of 16 digits.	BOT_ID__	Not display if Dial ID =Uncheck and PTT ID=OFF, or EOT is set
			12345678	Display of the current setting (If it is 8 or more digits, scroll it)
			-----987	Display when a code is input (Input it with DTMF key)
		Blank	--------	[Side1] : Data clear
18	End of Transmit	Code which it can input, 0~9, A~D, ∗ and #, maximum of 16 digits.	EOT_ID__	Not display if Dial ID =Uncheck and PTT ID=OFF, or EOT is set
			12345678	Display of the current setting (If it is 8 or more digits, scroll it)
			-----987	Display when a code is input (Input it with DTMF key)
		Blank	--------	[Side1] : Data clear

REALIGNMENT

■ Channel edit mode flow chart

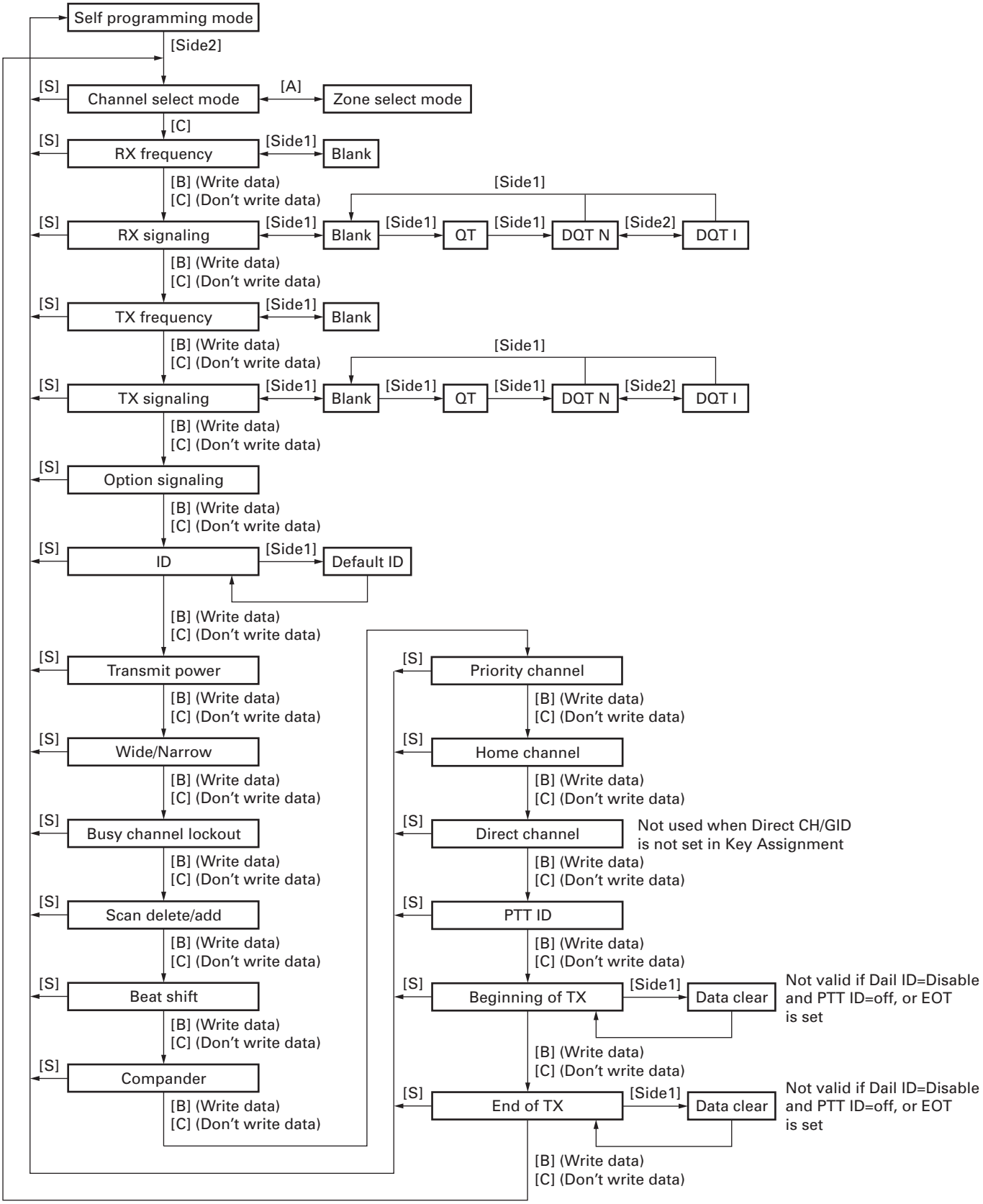

REALIGNMENT

■ Zone edit mode

1. Press the [A] key so that the "▼" indicator is located on the left side, above the zone number.
2. Rotate the selector select your desired zone number.
3. Press the [C] key to enter Zone Edit Mode.
4. Press the [C] key again to select the setting you wish to modify.
5. Rotate the selector to select the desired value.
6. Press the [B] key to store the value in memory and advance to the next setting.
7. Press the [C] key to skip any settings you do not wish to modify.
   Press the [S] key to exit. "SELF" appears on the display.

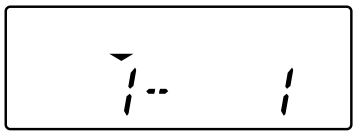

■ Zone edit mode flow chart

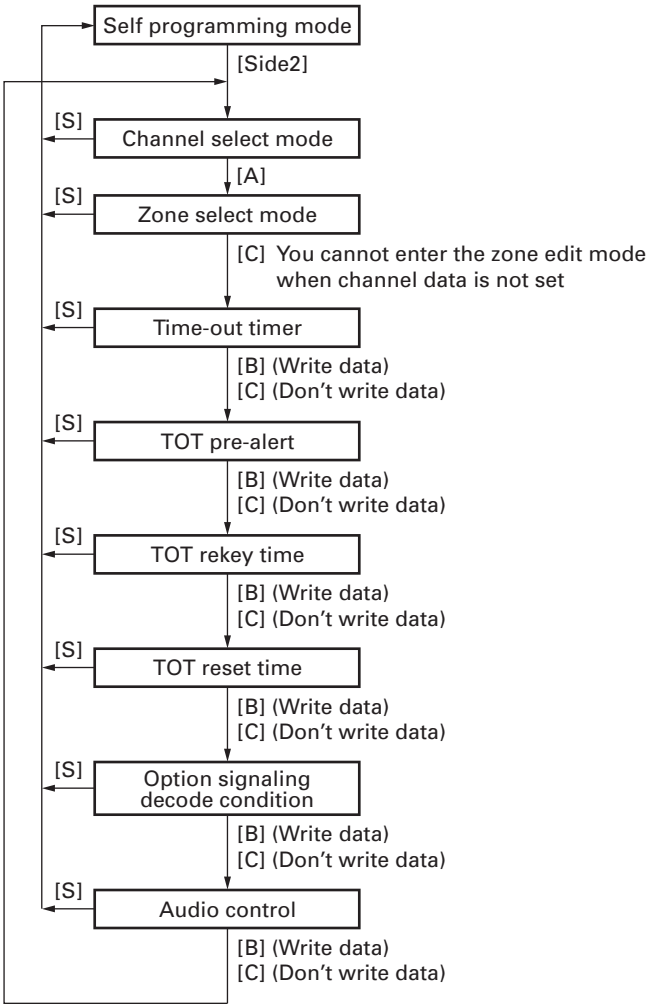

No.	Function	Choices	Display	Remarks
Zone Edit				
1	Time-out Timer	15~1200/15s	T O T _ _ _ 6 0	Default=60
2	TOT Pre-alert	Off, 1~10/1s	T O T P _ O F F	Default=Off
3	TOT Rekey Time	Off, 1~60/1s	T O T K _ O F F	Default=Off
4	TOT Reset Time	Off, 1~15/1s	T O T S _ O F F	Default=Off
5	Option Signaling Decode Condition	QT/DQT	O P D C _ Q T _	←Default
		Carrier	O P D C _ C R _	
6	Audio Control	QT/DQT	A D C _ Q T _ _	←Default
		QT/DQT and Option Signaling	A D C _ A N D _	
		QT/DQT or Option Signaling	A D C _ O R _ _	

REALIGNMENT

8-4. Function Setting Mode

1. Press the [Side1] key when "SELF" is displayed. The transceiver enters Function Setting Mode.
2. Press the [C] key to select the setting you wish to modify.
3. Rotate the selector to select the desired value.
4. Press the [B] key to store the value in memory and advance to the next setting.
5. Press the [C] key to skip any settings you do not wish to modify.
6. Press the [S] key to exit. "SELF" appears on the display.

No.	Function	Choices	Display	Remarks
Function Key				
1	[AUX]	None	A U X _ O F F _	←Default
		2-tone	A U X _ _ _ 1 _	
		Autodial	A U X _ _ _ 2 _	
		Autodial Programming	A U X _ _ _ 3 _	
		AUX	A U X _ _ _ 4 _	Optional Board=None
		Call 1	A U X _ _ _ 5 _	
		Call 2	A U X _ _ _ 6 _	
		CH/GID Down	A U X _ _ _ 7 _	
		CH/GID Up	A U X _ _ _ 8 _	
		Channel Entry	A U X _ _ _ 9 _	
		Direct CH1	A U X _ _ 1 0 _	
		Direct CH2	A U X _ _ 1 1 _	
		Direct CH3	A U X _ _ 1 2 _	
		Direct CH4	A U X _ _ 1 3 _	
		Display Character	A U X _ _ 1 4 _	
		Emergency	A U X _ _ 1 5 _	
		Home/CH/GID	A U X _ _ 1 6 _	
		Key Lock	A U X _ _ 1 7 _	
		Lamp	A U X _ _ 1 8 _	
		Low Transmit Power	A U X _ _ 1 9 _	
		Monitor	A U X _ _ 2 0 _	
		Monitor Momentary	A U X _ _ 2 1 _	
		OST	A U X _ _ 2 2 _	
		Transceiver Password	A U X _ _ 2 3 _	
		Scan	A U X _ _ 2 4 _	
		Scan Delete/Add	A U X _ _ 2 5 _	
		Scrambler	A U X _ _ 2 6 _	
		SelCall	A U X _ _ 2 7 _	
		SelCall+Status	A U X _ _ 2 8 _	
		Squelch Level	A U X _ _ 2 9 _	
		Squelch Off	A U X _ _ 3 0 _	
		Squelch Off Momentary	A U X _ _ 3 1 _	
		Status	A U X _ _ 3 2 _	

REALIGNMENT

No.	Function	Choices	Display	Remarks
		Talk Around	A U X _ _ 3 3 _	
		VOX	A U X _ _ 3 4 _	
		Zone Up	A U X _ _ 3 5 _	
		Zone Down	A U X _ _ 3 6 _	
2	[S1]	No Function	S 1 _ _ O F F _	
		2-tone	S 1 _ _ _ _ 1 _	
		Autodial	S 1 _ _ _ _ 2 _	
		Autodial Programming	S 1 _ _ _ _ 3 _	
		AUX	S 1 _ _ _ _ 4 _	Optional Board=None
		Call 1	S 1 _ _ _ _ 5 _	
		Call 2	S 1 _ _ _ _ 6 _	
		CH/GID Down	S 1 _ _ _ _ 7 _	
		CH/GID Up	S 1 _ _ _ _ 8 _	
		Channel Entry	S 1 _ _ _ _ 9 _	
		Direct CH1	S 1 _ _ _ 1 0 _	
		Direct CH2	S 1 _ _ _ 1 1 _	
		Direct CH3	S 1 _ _ _ 1 2 _	
		Direct CH4	S 1 _ _ _ 1 3 _	
		Display Character	S 1 _ _ _ 1 4 _	
		Home/CH/GID	S 1 _ _ _ 1 6 _	
		Key Lock	S 1 _ _ _ 1 7 _	
		Lamp	S 1 _ _ _ 1 8 _	←Default
		Low Transmit Power	S 1 _ _ _ 1 9 _	
		Monitor	S 1 _ _ _ 2 0 _	
		Monitor Momentary	S 1 _ _ _ 2 1 _	
		OST	S 1 _ _ _ 2 2 _	
		Transceiver Password	S 1 _ _ _ 2 3 _	
		Scan	S 1 _ _ _ 2 4 _	
		Scan Delete/Add	S 1 _ _ _ 2 5 _	
		Scrambler	S 1 _ _ _ 2 6 _	
		SelCall	S 1 _ _ _ 2 7 _	
		SelCall+Status	S 1 _ _ _ 2 8 _	
		Squelch Level	S 1 _ _ _ 2 9 _	
		Squelch Off	S 1 _ _ _ 3 0 _	
		Squelch Off Momentary	S 1 _ _ _ 3 1 _	
		Status	S 1 _ _ _ 3 2 _	
		Talk Around	S 1 _ _ _ 3 3 _	
		VOX	S 1 _ _ _ 3 4 _	
		Zone Up	S 1 _ _ _ 3 5 _	
		Zone Down	S 1 _ _ _ 3 6 _	

REALIGNMENT

No.	Function	Choices	Display	Remarks
3	[S2]	No Function	S 2 _ _ O F F _	
		2-tone	S 2 _ _ _ _ 1 _	
		Autodial	S 2 _ _ _ _ 2 _	
		AUX	S 2 _ _ _ _ 3 _	Optional Board=None
		Autodial Programming	S 2 _ _ _ _ 4 _	
		Call 1	S 2 _ _ _ _ 5 _	
		Call 2	S 2 _ _ _ _ 6 _	
		CH/GID Down	S 2 _ _ _ _ 7 _	
		CH/GID Up	S 2 _ _ _ _ 8 _	
		Channel Entry	S 2 _ _ _ _ 9 _	
		Direct CH1	S 2 _ _ _ 1 0 _	
		Direct CH2	S 2 _ _ _ 1 1 _	
		Direct CH3	S 2 _ _ _ 1 2 _	
		Direct CH4	S 2 _ _ _ 1 3 _	
		Display Character	S 2 _ _ _ 1 4 _	
		Home/CH/GID	S 2 _ _ _ 1 6 _	
		Key Lock	S 2 _ _ _ 1 7 _	
		Lamp	S 2 _ _ _ 1 8 _	
		Low Transmit Power	S 2 _ _ _ 1 9 _	
		Monitor	S 2 _ _ _ 2 0 _	
		Monitor Momentary	S 2 _ _ _ 2 1 _	
		OST	S 2 _ _ _ 2 2 _	
		Transceiver Password	S 2 _ _ _ 2 3 _	
		Scan	S 2 _ _ _ 2 4 _	
		Scan Delete/Add	S 2 _ _ _ 2 5 _	
		Scrambler	S 2 _ _ _ 2 6 _	
		SelCall	S 2 _ _ _ 2 7 _	
		SelCall+Status	S 2 _ _ _ 2 8 _	
		Squelch Level	S 2 _ _ _ 2 9 _	
		Squelch Off	S 2 _ _ _ 3 0 _	
		Squelch Off Momentary	S 2 _ _ _ 3 1 _	←Default
		Status	S 2 _ _ _ 3 2 _	
		Talk Around	S 2 _ _ _ 3 3 _	
		VOX	S 2 _ _ _ 3 4 _	
		Zone Up	S 2 _ _ _ 3 5 _	
		Zone Down	S 2 _ _ _ 3 6 _	
4	[S]	No Function	S _ _ _ O F F _	
		2-tone	S _ _ _ _ _ 1 _	
		Autodial	S _ _ _ _ _ 2 _	
		AUX	S _ _ _ _ _ 3 _	Optional Board=None

REALIGNMENT

No.	Function	Choices	Display	Remarks
		Autodial Programming	S _ _ _ _ _ 4 _	
		Call 1	S _ _ _ _ _ 5 _	
		Call 2	S _ _ _ _ _ 6 _	
		CH/GID Down	S _ _ _ _ _ 7 _	
		CH/GID Up	S _ _ _ _ _ 8 _	
		Channel Entry	S _ _ _ _ _ 9 _	
		Direct CH1	S _ _ _ _ 1 0 _	
		Direct CH2	S _ _ _ _ 1 1 _	
		Direct CH3	S _ _ _ _ 1 2 _	
		Direct CH4	S _ _ _ _ 1 3 _	
		Display Character	S _ _ _ _ 1 4 _	
		Home/CH/GID	S _ _ _ _ 1 6 _	
		Key Lock	S _ _ _ _ 1 7 _	
		Lamp	S _ _ _ _ 1 8 _	
		Low Transmit Power	S _ _ _ _ 1 9 _	
		Monitor	S _ _ _ _ 2 0 _	
		Monitor Momentary	S _ _ _ _ 2 1 _	
		OST	S _ _ _ _ 2 2 _	
		Transceiver Password	S _ _ _ _ 2 3 _	
		Scan	S _ _ _ _ 2 4 _	←Default
		Scan Delete/Add	S _ _ _ _ 2 5 _	
		Scrambler	S _ _ _ _ 2 6 _	
		SelCall	S _ _ _ _ 2 7 _	
		SelCall+Status	S _ _ _ _ 2 8 _	
		Squelch Level	S _ _ _ _ 2 9 _	
		Squelch Off	S _ _ _ _ 3 0 _	
		Squelch Off Momentary	S _ _ _ _ 3 1 _	
		Status	S _ _ _ _ 3 2 _	
		Talk Around	S _ _ _ _ 3 3 _	
		VOX	S _ _ _ _ 3 4 _	
		Zone Up	S _ _ _ _ 3 5 _	
		Zone Down	S _ _ _ _ 3 6 _	
5	[A]	No Function	A _ _ _ O F F _	
		2-tone	A _ _ _ _ _ 1 _	
		Autodial	A _ _ _ _ _ 2 _	
		Autodial Programming	A _ _ _ _ _ 3 _	
		AUX	A _ _ _ _ _ 4 _	Optional Board=None
		Call 1	A _ _ _ _ _ 5 _	
		Call 2	A _ _ _ _ _ 6 _	
		CH/GID Down	A _ _ _ _ _ 7 _	

REALIGNMENT

No.	Function	Choices	Display	Remarks
		CH/GID Up	A _ _ _ _ _ 8 _	
		Channel Entry	A _ _ _ _ _ 9 _	
		Direct CH1	A _ _ _ _ 1 0 _	
		Direct CH2	A _ _ _ _ 1 1 _	
		Direct CH3	A _ _ _ _ 1 2 _	
		Direct CH4	A _ _ _ _ 1 3 _	
		Display Character	A _ _ _ _ 1 4 _	
		Home/CH/GID	A _ _ _ _ 1 6 _	
		Key Lock	A _ _ _ _ 1 7 _	
		Lamp	A _ _ _ _ 1 8 _	
		Low Transmit Power	A _ _ _ _ 1 9 _	
		Monitor	A _ _ _ _ 2 0 _	
		Monitor Momentary	A _ _ _ _ 2 1 _	
		OST	A _ _ _ _ 2 2 _	
		Transceiver Password	A _ _ _ _ 2 3 _	
		Scan	A _ _ _ _ 2 4 _	
		Scan Delete/Add	A _ _ _ _ 2 5 _	←Default
		Scrambler	A _ _ _ _ 2 6 _	
		SelCall	A _ _ _ _ 2 7 _	
		SelCall+Status	A _ _ _ _ 2 8 _	
		Squelch Level	A _ _ _ _ 2 9 _	
		Squelch Off	A _ _ _ _ 3 0 _	
		Squelch Off Momentary	A _ _ _ _ 3 1 _	
		Status	A _ _ _ _ 3 2 _	
		Talk Around	A _ _ _ _ 3 3 _	
		VOX	A _ _ _ _ 3 4 _	
		Zone Up	A _ _ _ _ 3 5 _	
		Zone Down	A _ _ _ _ 3 6 _	
6	[B]	No Function	B _ _ _ O F F _	
		2-tone	B _ _ _ _ _ 1 _	
		Autodial	B _ _ _ _ _ 2 _	
		Autodial Programming	B _ _ _ _ _ 3 _	
		AUX	B _ _ _ _ _ 4 _	Optional Board=None
		Call 1	B _ _ _ _ _ 5 _	
		Call 2	B _ _ _ _ _ 6 _	
		CH/GID Down	B _ _ _ _ _ 7 _	
		CH/GID Up	B _ _ _ _ _ 8 _	
		Channel Entry	B _ _ _ _ _ 9 _	
		Direct CH1	B _ _ _ _ 1 0 _	
		Direct CH2	B _ _ _ _ 1 1 _	

REALIGNMENT

No.	Function	Choices	Display	Remarks
		Direct CH3	B _ _ _ _ 1 2 _	
		Direct CH4	B _ _ _ _ 1 3 _	
		Display Character	B _ _ _ _ 1 4 _	
		Home/CH/GID	B _ _ _ _ 1 6 _	
		Key Lock	B _ _ _ _ 1 7 _	
		Lamp	B _ _ _ _ 1 8 _	
		Low Transmit Power	B _ _ _ _ 1 9 _	
		Monitor	B _ _ _ _ 2 0 _	
		Monitor Momentary	B _ _ _ _ 2 1 _	
		OST	B _ _ _ _ 2 2 _	
		Transceiver Password	B _ _ _ _ 2 3 _	
		Scan	B _ _ _ _ 2 4 _	
		Scan Delete/Add	B _ _ _ _ 2 5 _	
		Scrambler	B _ _ _ _ 2 6 _	
		SelCall	B _ _ _ _ 2 7 _	
		SelCall+Status	B _ _ _ _ 2 8 _	
		Squelch Level	B _ _ _ _ 2 9 _	
		Squelch Off	B _ _ _ _ 3 0 _	
		Squelch Off Momentary	B _ _ _ _ 3 1 _	
		Status	B _ _ _ _ 3 2 _	
		Talk Around	B _ _ _ _ 3 3 _	←Default
		VOX	B _ _ _ _ 3 4 _	
		Zone Up	B _ _ _ _ 3 5 _	
		Zone Down	B _ _ _ _ 3 6 _	
7	[C]	No Function	C _ _ _ O F F _	
		2-tone	C _ _ _ _ _ 1 _	
		Autodial	C _ _ _ _ _ 2 _	
		Autodial Programming	C _ _ _ _ _ 3 _	
		AUX	C _ _ _ _ _ 4 _	Optional Board=None
		Call 1	C _ _ _ _ _ 5 _	
		Call 2	C _ _ _ _ _ 6 _	
		CH/GID Down	C _ _ _ _ _ 7 _	
		CH/GID Up	C _ _ _ _ _ 8 _	
		Channel Entry	C _ _ _ _ _ 9 _	
		Direct CH1	C _ _ _ _ 1 0 _	
		Direct CH2	C _ _ _ _ 1 1 _	
		Direct CH3	C _ _ _ _ 1 2 _	
		Direct CH4	C _ _ _ _ 1 3 _	
		Display Character	C _ _ _ _ 1 4 _	
		Home/CH/GID	C _ _ _ _ 1 6 _	

REALIGNMENT

No.	Function	Choices	Display	Remarks
		Key Lock	C _ _ _ _ 1 7 _	
		Lamp	C _ _ _ _ 1 8 _	
		Low Transmit Power	C _ _ _ _ 1 9 _	←Default
		Monitor	C _ _ _ _ 2 0 _	
		Monitor Momentary	C _ _ _ _ 2 1 _	
		OST	C _ _ _ _ 2 2 _	
		Transceiver Password	C _ _ _ _ 2 3 _	
		Scan	C _ _ _ _ 2 4 _	
		Scan Delete/Add	C _ _ _ _ 2 5 _	
		Scrambler	C _ _ _ _ 2 6 _	
		SelCall	C _ _ _ _ 2 7 _	
		SelCall+Status	C _ _ _ _ 2 8 _	
		Squelch Level	C _ _ _ _ 2 9 _	
		Squelch Off	C _ _ _ _ 3 0 _	
		Squelch Off Momentary	C _ _ _ _ 3 1 _	
		Status	C _ _ _ _ 3 2 _	
		Talk Around	C _ _ _ _ 3 3 _	
		VOX	C _ _ _ _ 3 4 _	
		Zone Up	C _ _ _ _ 3 5 _	
		Zone Down	C _ _ _ _ 3 6 _	
8	[Selector]	CH/GID Up/Down	C H _ U P / D N	←Default
		Zone Up/Down	Z N _ U P / D N	
		None	K N O B _ O F F	
9	Call 1 (Signaling setting)	DTMF	C A L L 1 _ D T	Only when Call 1 is set.
		2-tone	C A L L 1 _ 2 T	Default=FleetSync (Status)
		FleetSync (Status)	C A L L 1 _ F S	
	Call 1 (List setting)	List None, 1~16	L I S T _ _ _ 1	DTMF
		List None, 1~10	L I S T _ _ _ 1	2-tone
		List None, 1~50	L I S T _ _ _ 1	FleetSync, Default=None
10	Call 2 (Signaling setting)	DTMF	C A L L 2 _ D T	Only when Call 2 is set.
		2-tone	C A L L 2 _ 2 T	Default=FleetSync (Status)
		FleetSync (Status)	C A L L 2 _ F S	
	Call 2 (List setting)	List None, 1~16	L I S T _ _ _ 1	DTMF
		List None, 1~10	L I S T _ _ _ 1	2-tone
		List None, 1~50	L I S T _ _ _ 1	FleetSync, Default=None
11	Operator Selectable	No	D C O S _ _ N O	←Default
	(Direct CH)	Yes	D C O S _ Y E S	
12	Keypad Operation	None	K E Y O _ N O N	←Default, Key=16key only
		Channel Entry	K E Y O _ C H E	
		OST	K E Y O _ O S T	

REALIGNMENT

No.	Function	Choices	Display	Remarks
		DTMF (Autodial)	K E Y O _ A T D	
		DTMF (Keypad Auto PTT)	K E Y O _ K A P	
		FleetSync (SelCall)	K E Y O _ S E L	
		FleetSync (Status)	K E Y O _ S T A	
		FleetSync (SelCall+Status)	K E Y O _ S / S	
Optional Features				
13	Auto Backlight	YES/NO	A T L T _ N O _	Default=No
14	Power-on Tone	Current/Off, 1~31	P O N T _ C U R	Default=Current
15	Control Tone	Current/Off, 1~31	C N T T _ C U R	During Self-Programming, it is constant Default=Current
16	Warning Tone	Current/Off, 1~31	W A R T _ C U R	Default=Current
17	Alert Tone	Current/Off, 1~31	A L T T _ C U R	Default=Current
18	Sidetone	Current/Off, 1~31	S I D T _ C U R	Default=Current
19	Locator Tone	Current/Off, 1~31	L O C T _ C U R	Default=Current
20	Minimum Volume	0~31	M I N I _ _ _ 0	Default=0
21	Battery Saver	ON/OFF	B A T T _ O F F	Default=OFF
22	Battery Warning	Off	B TW _ O F F _	
		While Transmitting	B TW _ WT X _	←Default
		Always	B TW _ A LWY	
		Always w/Beep	B TW _ A LWB	
23	Squelch Level	0~9/1STEP	S Q L _ _ _ 5 _	Default=5
Scan				
24	Priority	None	P R I _ N O N E	←Default
		Fixed	P R I _ F I X _	
		Selected	P R I _ S E L _	
		Operator Selectable	P R I _ O S E L	
25	Lookback Time A	500~5000ms/50ms Step	L B A _ _ 5 0 0	Default=500
26	Lookback Time B	500~5000ms/50ms Step	L B B _ 2 0 0 0	Default=2000
27	Revert Channel	Last Called	R E V _ L / C _	←Default
		Last Used	R E V _ L / U _	
		Selected	R E V _ S E L _	
		Selected+TalkBack	R E V _ S / T _	
		Priority	R E V _ P R I _	Cannot be set when priority=None or selected
		Priority+TalkBack	R E V _ P / T _	Cannot be set when priority=None or selected
28	Dropout Delay Time	0~300/1s	D O D T _ _ _ 3	Default=3
29	Dwell Time	0~300/1s	DWL _ _ _ _ 3	Default=3
DTMF				
30	DTMF Speed	6, 8, 10, 15	D T S P _ _ 6 _	Default=6
31	First Digit Delay Time	0~1000ms/50ms	F D D T _ 2 0 0	Default=200
32	First Digit Delay Time with QT	0~1000ms/50ms	F DWQ _ 2 0 0	Default=200

REALIGNMENT

No.	Function	Choices	Display	Remarks
33	First Digit Time	0, 100, 500, 1000	F D T _ _ _ _ 0	Default=0
34	∗ and # Digit	0, 100, 500, 1000	∗ # _ _ _ _ _ 0	Default=0
35	Dial ID	ON/OFF	D I D _ O F F _	Default=OFF, Key=16key only
36	D Code Assignment	D Code	D C A _ D _ C D	Default=D Code
		1~16/1s	D C A _ _ _ 1 6	
37	DTMF Signaling	OFF	D T M S _ O F F	
		Code SQ	D T M S _ C S Q	←Default
		SelCall	D T M S _ S E L	
38	Inter Mediate Code	0~9, A~D, ∗, #	I M C _ _ # _ _	DTMF Signaling=SelCall, Default=#
39	Group Code	Off, A~D, ∗, #	G P C D _ O F F	Default=Off
40	Auto Reset Timer	Off, 1~300/1s	A R T _ _ 1 0 _	Default=10
41	Alert Tone (Individual)	Off, 1~8/ 1	C A T I _ _ _ 1	Default=1
42	Alert Tone (Group)	Off, 1~8/ 1	C A T G _ _ _ 2	Default=2
43	Transpond	Off	T R P _ _ O F F	←Default
		Alert	T R P _ _ A L T	
		ID Code	T R P _ _ I D C	
		Transpond Code	T R P _ _ T R C	
		Ringing Tone	T R P _ _ R I N	
Others				
44	Panel Test/	Enable	P T M _ E N A _	
	Panel Tuning Mode	Disable	P T M _ D I S _	←Default

Refer to the function setting mode flow chart on page 20.

8-5. Memory Reset Mode

- This mode is used to clear data for functions that can be set in Self-Programming Mode or to return to reset values (default).
- Pressing [S] key when “SELF” is shown, sets the display to “CANCEL”.
- Turning the selector alternately switches the display between “CANCEL” ↔ “READY”.
- Pressing [B] key when “READY” is shown, clears the data and sets the display to “CLEAR”.
- Pressing [S] key again, returns the display to “SELF”.
- Pressing [S] key when “CANCEL” is shown, returns the display to “SELF” without resetting the data.

9. Firmware Version Information Mode

Turn the transceiver ON with the [Side1] key held down. Then, the version is displayed during holding the [Side1] key.

REALIGNMENT

■ Function setting mode flow chart

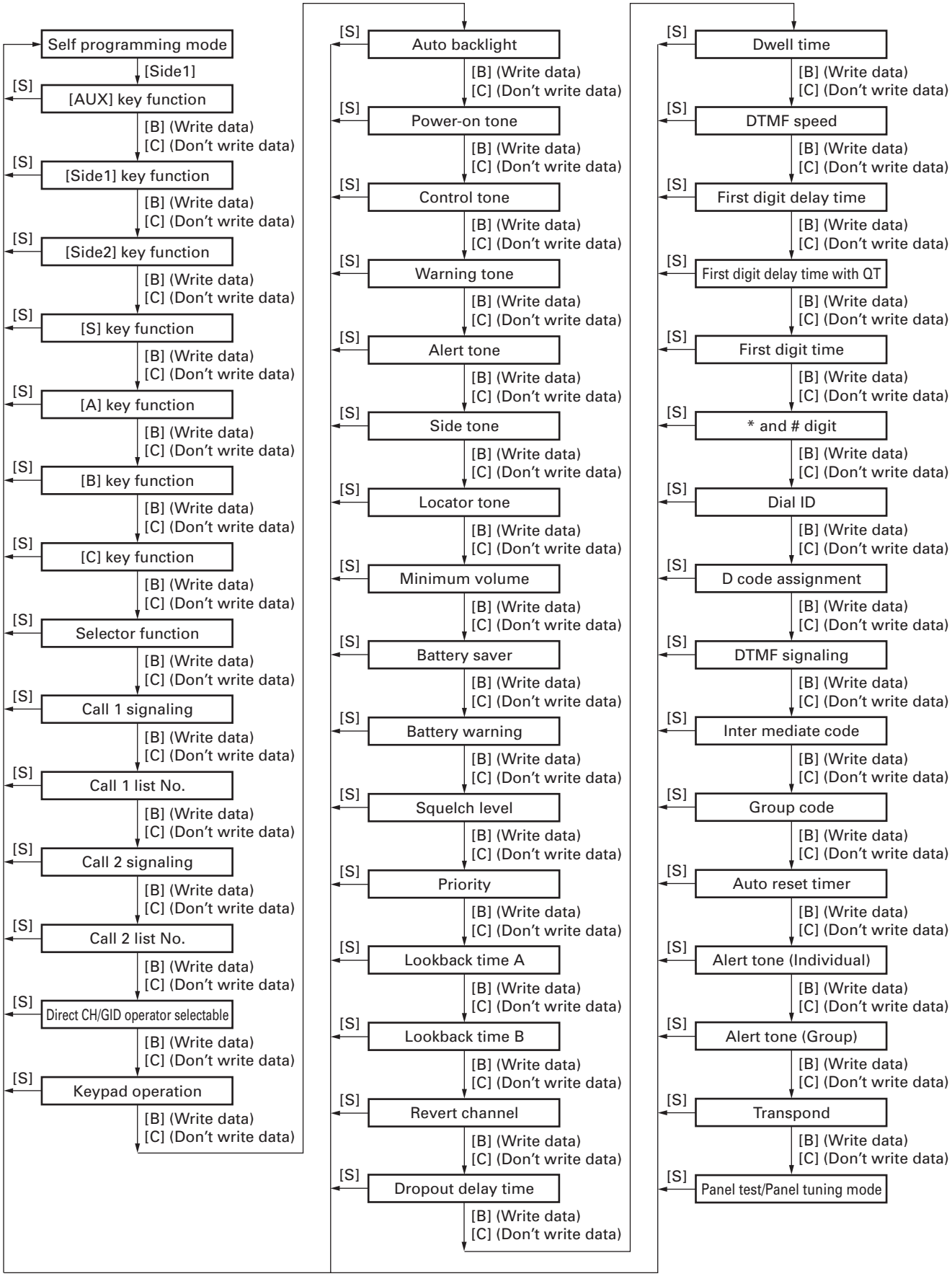

DISASSEMBLY FOR REPAIR

1. Removing the FPC

1) Remove the solder from the TX-RX unit using a solder iron (①).
2) Peel the double-sided tape (②).
3) Remove the solder from the battery terminal block using the solder iron (③).

Note : You must replace the FPC and the double-sided tape (4 x 7 mm) when replacing the volume or the selector.

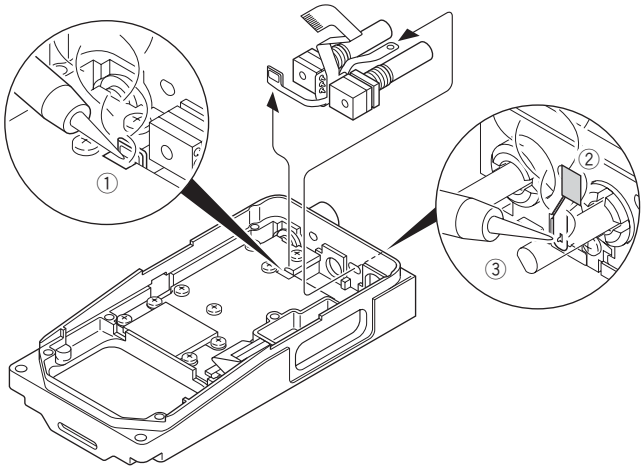

2. Separating the Speaker Holder from the Control Unit

1) As in shown in the figure below, the speaker holder is attached to the LCD cover with tab (①).
   Use a pair of tweezers or similar instrument to lift the speaker holder away from the control unit (②).

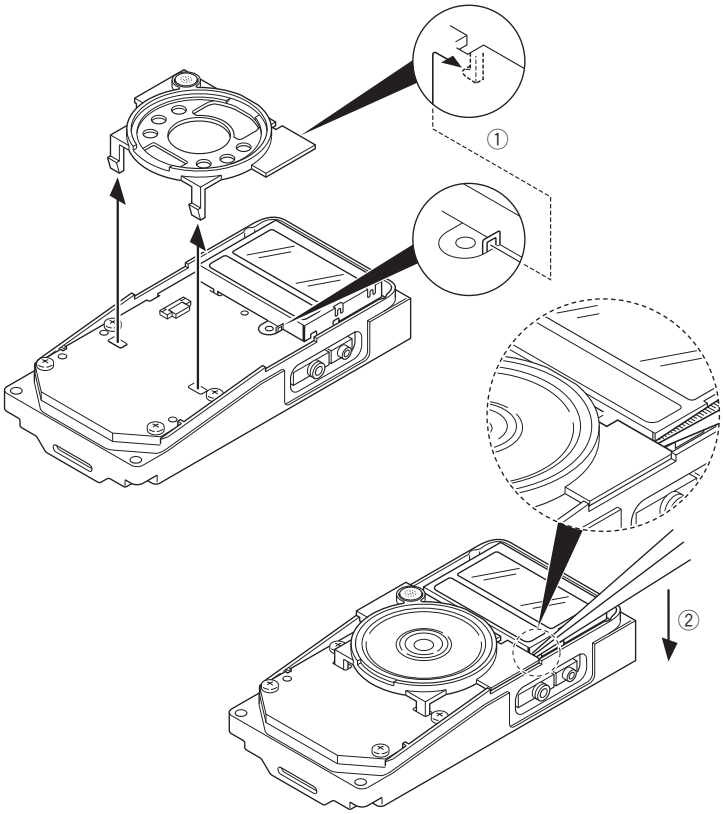

3. How to Assemble the Antenna Connector and its Terminal

The antenna connector and its terminal are supplied as separate parts.
When replacing the antenna connector and/ or terminal, assemble the parts prior to the replacement.

1) Mount the antenna connector onto the chassis (①).
   Double-sided tape is attached to the terminal; peel off the tape cover (②).
   Attach the terminal to the antenna connector as shown below.
   Slide the antenna terminal along the adhesive cushion on the chassis so that the adhesive part on the terminal is firmly attached to the antenna connector (③).
2) Remove the antenna connector from the chassis with its terminal attached, then solder the center part of antenna connector to its terminal (④).
   Do not use excessive solder on terminal.

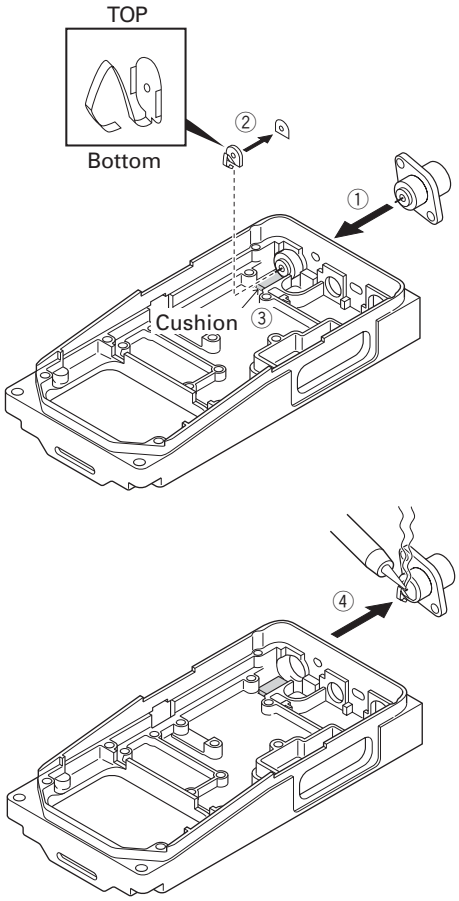

DISASSEMBLY FOR REPAIR

4. Replacing the Speaker and Microphone

1) After affixing the double-sided tape (5.4 x 2.7 mm) to the speaker, attach the speaker to the speaker holder (①).
2) Insert the microphone into the hold of the holder, as shown by the diagram (②).

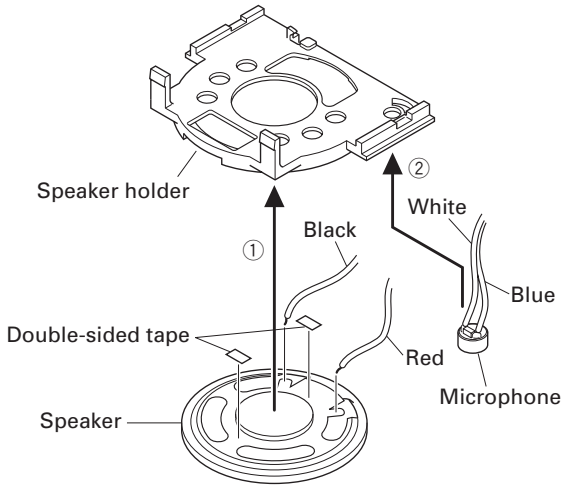

3) Match the speaker and microphone lead wires with the color-code of silkscreen of the printed circuit board (③), then solder them in place.

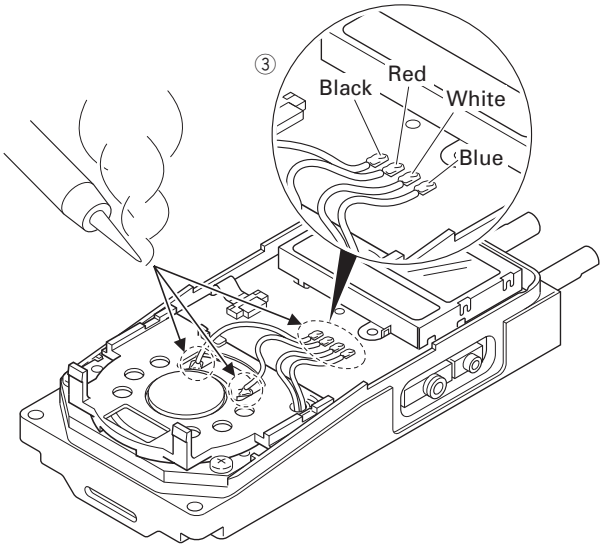

4) Lift the speaker holder (④), then flip it over to the left (⑤).
5) Insert the tabs of the speaker holder into the slots of the transceiver.
First insert the bottom tabs into the control unit (⑥), then insert the top tabs into the LCD cover (⑦).

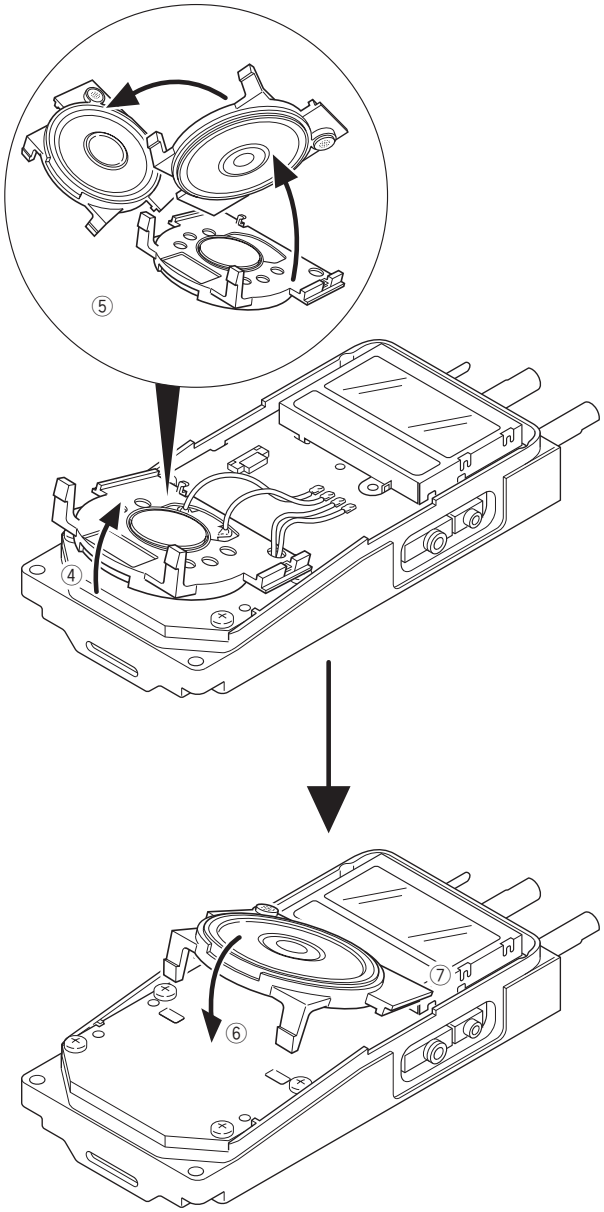

CIRCUIT DESCRIPTION

1. Frequency Configuration

The receiver utilizes double conversion. The first IF is 49.95MHz and the second IF is 450kHz. The first local oscillator signal is supplied from the PLL circuit.

The PLL circuit in the transmitter generates the necessary frequencies. Figure 1 shows the frequencies.

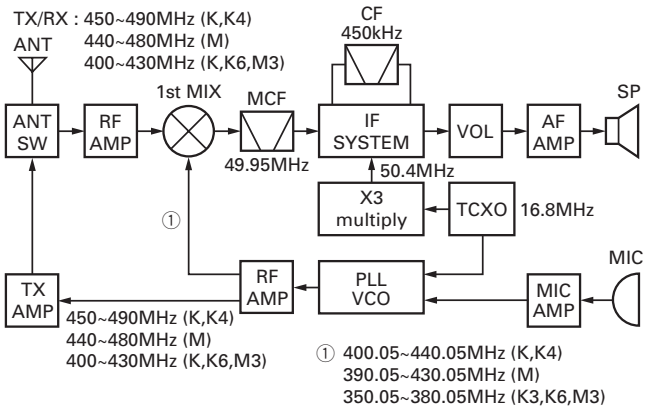

Fig. 1 Frequency configuration

2. Receiver System

The receiver system is shown in Figure 2.

2-1. Front End (RF AMP) Circuit

The signal coming from the antenna passes through the transmit/receive switching diode circuit (D604, D605, D606 and D608), passes through a BPF (L717 and L718), and is amplified by the RF amplifier (Q705).

The resulting signal passes through a BPF (L711, L712 and L713) and goes to the mixer. These BPFs are adjusted by variable capacitors (D703, D704, D705, D706 and D707). The input voltage to the variable capacitor is regulated by voltage output from the DC amplifier (IC19).

2-2. First Mixer

The signal from the front end is mixed with the first local oscillator signal generated in the PLL circuit by Q704 to produce a first IF frequency of 49.95 MHz.

The resulting signal passes through the XF701 MCF to cut the adjacent spurious and provide the optimum characteristics, such as adjacent frequency selectivity.

2-3. IF Amplifier Circuit

The first IF signal is passed through a four-pole monolithic crystal filter (XF701) to remove the adjacent channel signal. The filtered first IF signal is amplified by the first IF amplifier (Q703) and then applied to the IF system IC (IC701). The IF system IC provides a second mixer, second local oscillator, limiting amplifier, quadrature detector and RSSI (Received Signal Strength Indicator). The second mixer mixes the first IF signal with the 50.4MHz of the second local oscillator output (TCXO X501) and produces the second IF signal of 450kHz.

The second IF signal is passed through the ceramic filter (Wide : CF701, Narrow : CF702) to remove the adjacent channel signal. The filtered second IF signal is amplified by the limiting amplifier and demodulated by the quadrature detector with the ceramic discriminator (CD701). The demodulated signal is routed to the audio circuit.

2-4. Wide/Narrow Switching Circuit

Wide and Narrow settings can be made for each channel by switching the ceramic filters CF701 (Wide), CF702 (Narrow). The Wide and Narrow is output from IC4.

D701 and D702 are switched to ceramic filters when a Wide/Narrow level is selected.

Q702 turns on/off with the Narrow and the IC701 detector output level is changed to maintain a constant output level during wide or narrow signals.

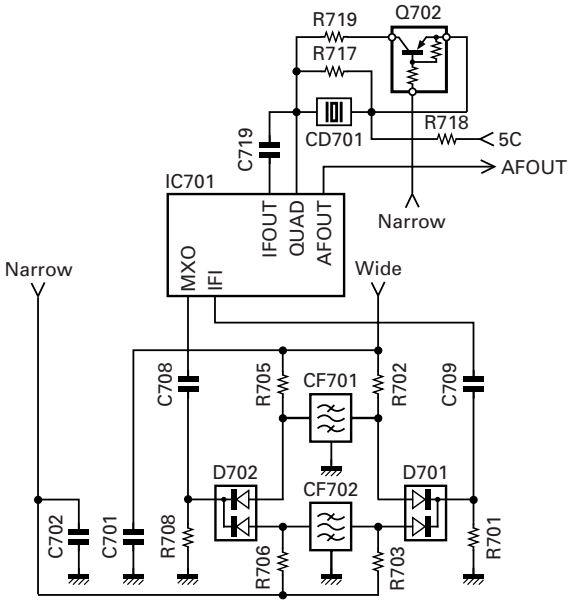

Fig. 3 Wide/Narrow switching circuit

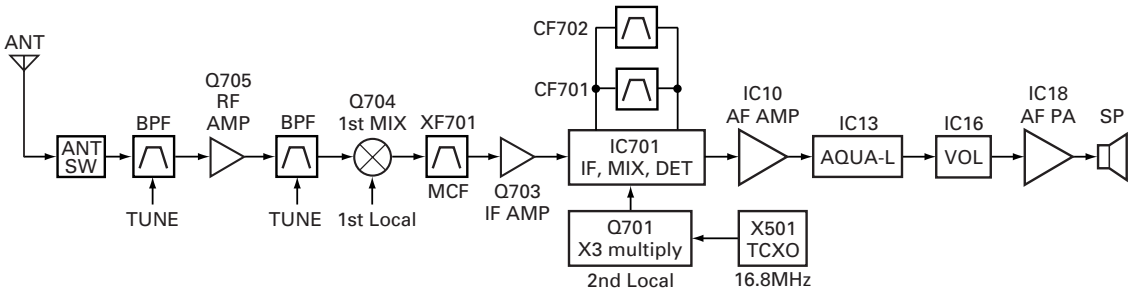

Fig. 2 Receiver system

CIRCUIT DESCRIPTION

2-5. Audio Amplifier Circuit

The demodulated signal from IC701 is amplified by IC10, and goes to AF amplifier through IC13.

The signal then goes through an volume control (IC16), and is routed to an audio power amplifier (IC18) where it is amplified and output to the speaker.

2-6. Squelch Circuit

Part of the AF signal from the IC enters the FM IC (IC701) again, and the noise component is amplified and rectified by a filter and an amplifier to produce a DC voltage corresponding to the noise level.

The DC signal from the FM IC goes to the analog port of the microprocessor (IC7). IC7 determines whether to output sounds from the speaker by checking whether the input voltage is higher or lower than the preset value.

To output sounds from the speaker, IC7 sends a high signal to the AM2 line and IC5 sends a high signal to the AM1 line, and turns IC18 on through Q23, Q24, Q27, Q28 and Q35. (See Figure 4)

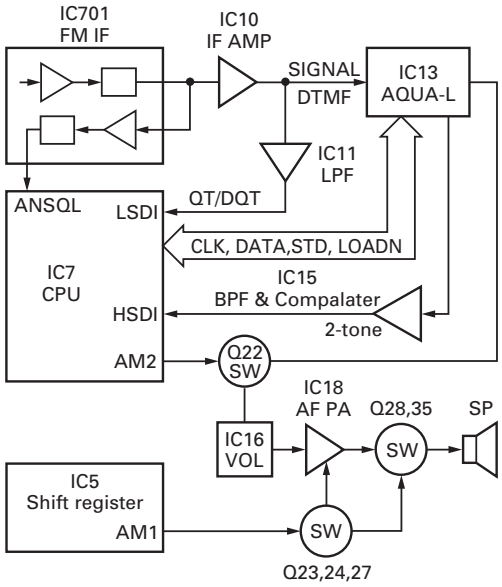

Fig. 4 Audio amplifier and squelch circuit

3. Transmitter System

3-1. Microphone Amplifier Circuit

The signal from microphone amplified by IC13 (1/2) and limited by AGC circuit composed of D30, D31, Q25 and Q26, and goes through mute switch (Q30). IC13 is composed of high-pass filter, low-pass filter and pre-emphasis/IDC circuit.

The signal enters the summing amplifier consisting of IC12 (2/2), and passes through the D/A converter (IC16) for the maximum deviation adjustment, and is mixed with the low speed data from the CPU (IC7).

The output signal from the D/A converter goes to the VCO modulation input. The other output signal from the D/A converter passes through the D/A converter (IC16) again for the BAL adjustment, and the buffer amplifier (IC17), and goes to the TCXO modulation input.

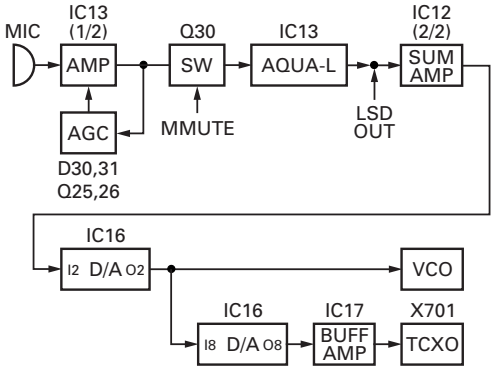

Fig. 5 Microphone amplifier

3-2. Drive and Final Amplifier Circuit

The signal from the T/R switch (D516 is on) is amplified by the pre-drive (Q602) and drive amplifier (Q603) to 50mW.

The output of the drive amplifier is amplified by the RF final amplifier (Q604) to 4.0W (1W when the power is low). The RF final amplifier consists of two MOS FET stages.

The output of the RF final amplifier is then passed through the harmonic filter (LPF) and antenna switch (D604 and D605) and applied to the antenna terminal.

3-3. APC Circuit

The APC circuit always monitors the current flowing through the RF power amplifier (Q604) and keeps a constant current. The voltage drop at R621, R623 and R629 is caused by the current flowing through the RF final amplifier and this voltage is applied to the differential amplifier IC601(1/2).

IC601(2/2) compares the output voltage of IC601(1/2) with the reference voltage from IC7. The output of IC601(2/2) controls the VG of the RF power amplifier, drive amplifier and pre-drive amplifier to make both voltages the same.

The change of power high/low is carried out by the change of the reference voltage.

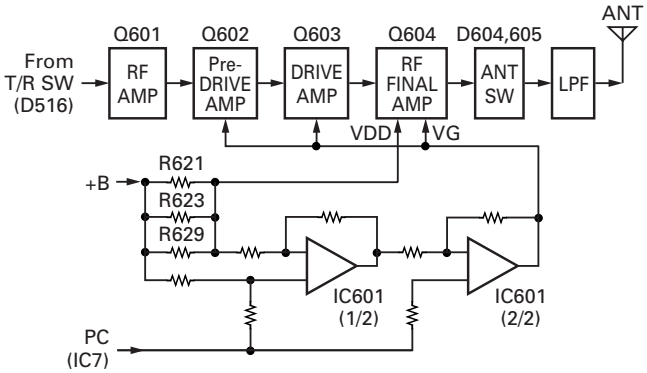

Fig. 6 Drive and final amplifier and APC circuit

CIRCUIT DESCRIPTION

4. Frequency Synthesizer Circuit

4-1. Frequency Synthesizer

The frequency synthesizer consists of the TCXO (X501), VCO, PLL IC (IC501) and buffer amplifiers.

The TCXO generates 16.8MHz. The frequency stability is 2.5ppm within the temperature range of –30 to +60°C. The frequency tuning and modulation of the TCXO are done to apply a voltage to pin 1 of the TCXO. The output of the TCXO is applied to pin 8 of the PLL IC.

The VCO consists of 2VCO and covers a dual range of the 400.05~440.05MHz (K,K4), 350.05~380.05MHz (K3,K6,M3) or 390.05~430.05MHz (M) and the 450~490MHz (K,K4), 400~430MHz (K3,K6,M3) or 440~480MHz (M). The VCO generates 400.05~440.05MHz (K,K4), 350.05~380.05MHz (K3,K6,M3) or 390.05~430.05MHz (M) for providing to the first local signal in receive. The operating frequency is generated by Q502 in transmit mode and Q503 in receive mode. The oscillator frequency is controlled by applying the VCO control voltage, obtained from the phase comparator (IC501) to the variable capacitor diodes (D505 and D507 in transmit mode and D509 and D511 in receive mode).

The RX pin of IC4 goes "low" in receive mode causing Q503 and Q504 (2/2) turn on. The TX pin goes "low" in transmit mode causing Q502 and Q504 (1/2) turn on.

The outputs from Q502 and Q503 are amplified by buffer amplifier (Q506) and doubled by Q501 and then sent to PLL IC.

The PLL IC consists of a prescaler, reference divider, phase comparator, charge pump (The frequency step of the PLL circuit is 5 or 6.25kHz). The input signal from the pins 8 and 5 of the PLL IC is divided down to the 5 or 6.25kHz and compared at phase comparator. The pulsed output signal of the phase comparator is applied to the charge pump and transformed into DC signal in the loop filter (LPF). The DC signal is applied to the CV of the VCO and locked to keep the VCO frequency constant.

PLL data is output from PLLDAT (pin 93), PCK (pin 79) and PLE (pin 78) of the microprocessor (IC7). The data are input to the PLL IC when the channel is changed or when transmission is changed to reception and vice versa. A PLL lock condition is always monitored by the pin 77 (UL) of the microprocessor. When the PLL is unlocked, the UL goes low.

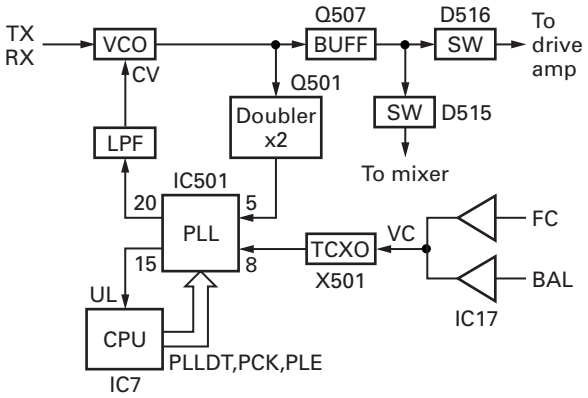

Fig. 7 PLL block diagram

5. Control Circuit

The control circuit consists of microprocessor (IC7) and its peripheral circuits. It controls the TX-RX unit. IC7 mainly performs the following;

1) Switching between transmission and reception by PTT signal input.
2) Reading system, zone, frequency, and program data from the memory circuit.
3) Sending frequency program data to the PLL.
4) Controlling squelch on/off by the DC voltage from the squelch circuit.
5) Controlling the audio mute circuit by decode data input.
6) Transmitting tone and encode data.

5-1. Frequency Shift Circuit

The microprocessor (IC7) operates at a clock of 11.0592 MHz. This oscillator has a circuit that shifts the frequency by Beat shift switch (Q17).

A beat sound may be able to be evaded from generation if "Beat Shift" is set to ON when it is generated in the internal spurious transmission modulated sound of a transceiver.

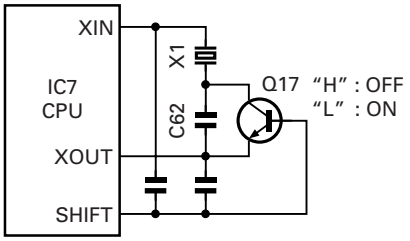

Fig. 8 Frequency shift circuit

5-2. Memory Circuit

Memory circuit consists of the CPU (IC7) and a flash memory (IC8). A flash memory has a capacity of 4M bits and contains the transceiver control program for the CPU. It also stores the data for transceiver channels and operating parameter that are written by the FPU. This program can be easily written from an external devices.

The EEPROM (IC9) stores the last channel data, the scan on status, and other parameters.

■ Flash memory

Note : The flash memory stores the data that is written by the FPU (KPG-101D), and firmware program (User mode, Test mode, Tuning mode, etc.). This data must be rewritten when replacing the flash memory.

■ EEPROM

Note : The EEPROM stores tuning data (Deviation, Squelch, etc.).
Realign the transceiver after replacing the EEPROM.

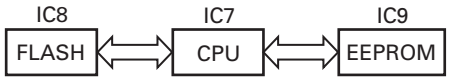

Fig. 9 Memory circuit

CIRCUIT DESCRIPTION

5-3. Low Battery Warning

The battery voltage is monitored by the microprocessor (IC7 pin 123 : BATTLVL). When the battery voltage falls below the voltage set by the Low Battery Warning adjustment during the transmission, the red LED blinks to notify the operator that it is time to replace the battery (When the "On TX" option (default setting) under the Battery Warning / status function in the FPU is selected.). If the battery voltage falls below 5.9V, the transceiver does not transmit and the warning tone beeps while the PTT switch is pressed.

Low battery warning	Battery status
The red LED blinks during the transmission.	The battery voltage is low but the transceiver is still usable.
The red LED blinks and the warning tone beeps while the PTT switch is pressed.	The battery voltage is low and the transceiver is not usable to make calls.

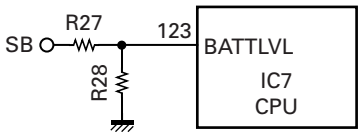

Fig. 10 Low battery warning

5-4. Battery Type Detection

The transceiver automatically detects the battery type, measuring the resistance between the S-terminal and + terminal on the battery pack and changes the supplied voltage to the S-terminal as below. The microprocessor then detects the battery type.

Resistor value	Battery type	Input voltage of S-terminal
1.8MΩ	Li-ion	0.3~1.3V
560kΩ	Ni-Cd	1.3~2.6V
220kΩ	Ni-MH	2.6~5.0V
OPEN	Battery case	0~0.3V

5-5. Key Input

Keys and channel selector circuit.

The signal from the keys and channel selector are directly input to the microprocessor, as shown in Figure 11.

6. Signaling Circuit

6-1. Encode

■ Low-speed data (QT, DQT, LTR*)

Low-speed data is output from pin 30 of the CPU. The signal passes through MOD amplifier (IC12 1/2), and goes to the buffer amplifier (IC17 2/2). The signal is mixed with the audio signal and goes to the VCO and TCXO (X501) modulation input after passing through the D/A converter (IC16) for BAL adjustment.

* : LTR signaling apply TK-3173 and TK-3170 (M,M3) only.

■ High-speed data (2-tone, DTMF)

High-speed data (HSD) is output from pin 4 of the CPU. The signal passes through a low-pass CR filter and provides a TX HSD tone and a RX HSD tone. TX HSD deviation making an adjustment by microprocessor is passed through the switch (IC14) and then applied to the audio processor (IC13).

The signal is mixed with the audio signal and goes to the VCO and TCXO. The RX HSD tone is passed a summing amplifier (IC18). The D/A converter (IC16) for audio control, audio power amplifier and then to the speaker.

■ MSK

MSK signal is output from pin 6 of IC13. The signal passes through the D/A converter (IC16) and is routed to the VCO. When encoding MSK, the microphone input signal is muted.

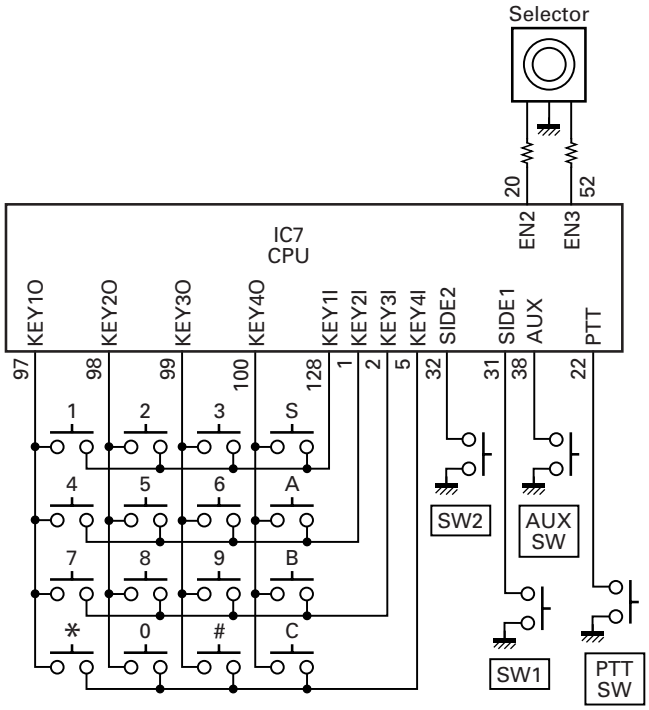

Fig. 11 Key input

CIRCUIT DESCRIPTION

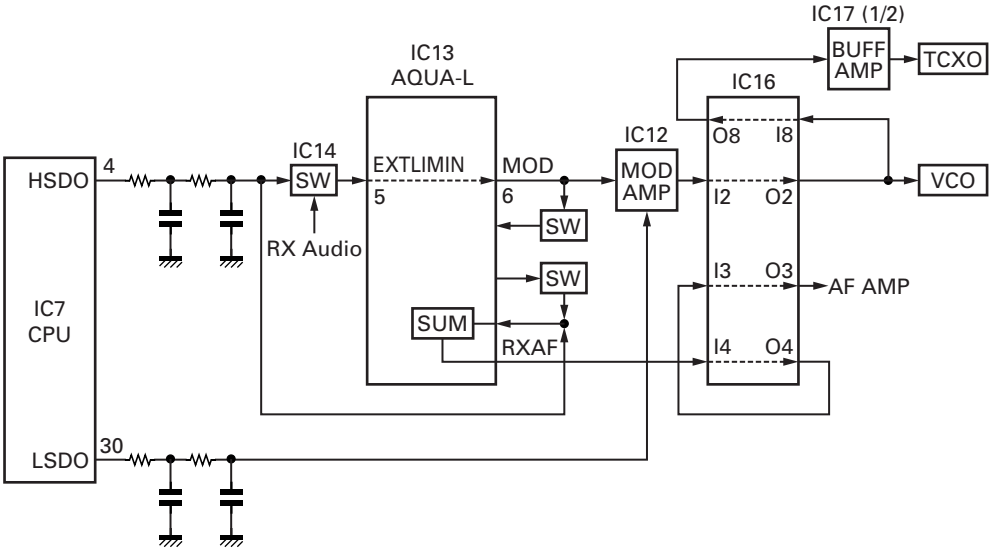

Fig. 12 Encode

6-2. Decode

■ QT/DQT/LTR*

The output signal from IF IC (IC701) enters the microprocessor (IC7) through IC11. IC7 determines whether the QT, DQT or LTR matches the preset value, and controls the AM1 using IC5 and the speaker output sounds according to the squelch results.

* : LTR signaling apply TK-3173 and TK-3170 (M,M3) only.

■ 2-tone

Part of the received AF signal output from the AF amplifier IC10, and then passes through an audio processor (IC13), goes to the other AF amplifier IC15, is compared, and then goes to IC7. IC7 checks whether 2-tone data is necessary. If it matches, IC7 carries out a specified operation, such as turning the speaker on. (See Figure 4)

■ MSK (Fleet Sync)

Fleet Sync utilizes 1200bps and 2400bps MSK signal is output from pin 6 of IC13. And is routed to the VCO. When encoding MSK, the microphone input signal is muted.

■ DTMF

The DTMF input signal from the IF IC (IC701) is amplified by IC10 and goes to IC13. The decoded information is then processed by the CPU.

7. Power Supply

There are five 5V power supplies for the microprocessor: 5M, 5MS, 5C, 5R and 5T.

5M is always output while the power is on. 5M is always output, but turns off when the power is turned off to prevent malfunction of the microprocessor.

5C is a common 5V and is output when SAVE is not set to OFF.

5R is 5V for reception and output during reception.

5T is 5V for transmission and output during transmission.

SEMICONDUCTOR DATA

Microprocessor : 30625MGP234HU (TX-RX unit IC7)

Pin No.	Port Name	I/O	Function
1	KEY2	I	Key matrix 2 input
2	KEY3	I	Key matrix 3 input
3	PC	O	TX APC adjust
4	HSDO	O	High speed data output
5	KEY4	I	Key matrix 4 input
6	EEPCL	O	EEPROM clock
7	HSDIN	I	High speed data input
8	MDSW	I	Man down switch input
9	DACDAT	O	DAC data
10	BYTE	-	5V
11	CNVSS	-	5V
12	EEPDAT	O	EEPROM data
13	AM2	O	Audio mute 2
14	RESET	I	BATT reset
15	XOUT	O	11.0592MHz clock output
16	DGND	-	DGND (Vss)
17	XIN	I	11.0592MHz clock input
18	VCC	-	5V
19	NMI	-	5V
20	EN2	I	Selector input 2
21	INT	I	BATT voltage INT
22	PTT	I	PTT
23	SHIFT	O	Beat shift
24	BEEP	O	Beep output
25	SFTOE	O	BU4094BCFV output enable
26	DACLD	O	M62364FP LD
27	LEDR	O	LED red
28	LEDG	O	LED green
29	OPTDET	I	Option DET
30	LSDOUT	O	Low speed data output
31	SIDE1	I	Side 1 key
32	SIDE2	I	Side 2 key
33	TXD	I/O	TXD (COM0)
34	VCC1	-	5V (Vcc1)
35	RXD	I	RXD (COM0)
36	DGND	-	DGND (Vss)
37	DACCLK	O	DAC CLK
38	AUX	I	AUX KEY
39	TXD2	O	TXD2 (COM1)

Pin No.	Port Name	I/O	Function
40	RXD2/AINH	I	RXD2 (COM1)
41	AFDAT	O	BB TDATA and DTRCLK
42	AFDIO	I/O	BB DI/O
43	AFDIR	O	BB DIR
44	DTRLOAD	O	BB DTMF enable
45	AFSTD	I	BB STD
46	SCLK	O	BB SCLK
47	RDY	-	5V
48	ALE	-	NC
49	HOLD	-	5V
50	HLDA	-	NC
51	EN4	I	Selector input 4
52	EN3	I	Selector input 3
53	5TC	O	5T control
54	EN1	I	Selector input 1
55	BCLK	O	NC
56	RD	O	Read (RD)
57	BHE	O	NC
58	WR	O	Write (WR)
59	APCSW	O	APC SW
60	DSW	O	APC voltage discharge SW
61	LCDINH	O	LCD INH
62	LCDDAT	O	LCD DATA
63	LCDCLK	O	LCD CLK
64	SIM/LCDCE	O	LCD chip select
65	CS0	O	Chip select 0
66	A19	-	NC
67~76	A18~A9	O	Address bus 18~9
77	UL	I	PLL unlock
78	PLE	O	PLL enable
79	PCK	O	PLL clock
80	SFTSTB	-	SFTSTB
81	SELF	I/O	Self progamming
82	VCC2	-	5V
83	A8	O	Address bus 8
84	DGND	-	DGND (Vss)
85~92	A7~A0	O	Address bus 7~0
93	PLLDAT	O	PLL data
94	BB RDF/FD	I	BB RDF/FD

SEMICONDUCTOR DATA / COMPONENTS DESCRIPTION

Pin No.	Port Name	I/O	Function
95	TCLK/DTRDO	I	BB TCLK and DTRDO
96	5RC	O	5R control
97	KEY1O	O	Key matrix output
98	KEY2O	O	Key matrix output
99	KEY3O	O	Key matrix output
100	KEY4O	O	Key matrix output
101~108	D7~D0	I/O	Data bus 7~0
109	DT	O	Serial data
110	CK	O	Serial clock
111	AUX3	I/O	Auxiliary 3
112	AUX1	I/O	Auxiliary 1
113	AUX6	I/O	Auxiliary 6
114	AUX2	O	Auxiliary 2
115	AUX5	O	Auxiliary 5
116	AUX4	I/O	Auxiliary 4
117	BATTSEL	I	BATT select
118	THP	I	TX thermal input
119	VOLIN	I	VOL input
120	VOXIN	I	VOX input
121	ASQ	I	RX analog SQ. input
122	RSSI	I	RX RSSI input
123	BATTLVL	I	BATT level
124	AGND	-	DGND (Vss)
125	LSDIN	I	Low speed data input
126	VREF	-	5V (Vref)
127	AVCC	-	5V (AVcc)
128	KEY1	O	Key matrix 1 input

TX-RX unit (X57-7010-XX)

Ref. No.	Use / Function	Operation / Condition
IC1	IC	Voltage detector / INT
IC2	IC	Voltage regulator / 5V
IC3	IC	Voltage detector / RESET
IC4,5	IC	Shift register
IC6	IC	LCD driver
IC7	Microprocessor	Microprocessor
IC8	IC	Flash memory
IC9	IC	EEPROM
IC10	IC	DET amplifier / VREF
IC11	IC	LSD filter
IC12	IC	TX SUM amplifier
IC13	IC	Audio processor
IC14	IC	AF switch
IC15	IC	RX HSD filter
IC16	IC	D/A converter
IC17	IC	TCXO buffer amplifier
IC18	IC	AF amplifier
IC19	IC	RX BPF tune voltage amplifier
IC501	IC	PLL system
IC601	IC	Comparator (APC)
IC701	IC	FM IF system
Q1	Transistor	5T voltage control
Q4 (1/2)	Transistor	AVR / 5C
Q4 (2/2)	Transistor	AVR / 5T
Q5 (1/2)	FET	5TC switch
Q5 (2/2)	FET	SAVE switch
Q6	Transistor	5C voltage control
Q7	FET	TX/RX indicator control
Q8	Transistor	5R control switch
Q9	Transistor	5MS control switch
Q12	Transistor	Back light control
Q13	Transistor	Back light DC supply
Q14	FET	RX AF mute
Q15	FET	SSB DC supply control switch
Q16	Transistor	SSB DC supply switch
Q17	Transistor	CPU clock shift switch
Q19	FET	VOX level detector control switch
Q21	Transistor	AF switch
Q22	FET	AF mute switch

COMPONENTS DESCRIPTION

Ref. No.	Use / Function	Operation / Condition
Q23	Transistor	AF amplifier DC supply control switch
Q24	FET	AF amplifier DC supply switch
Q25,26	FET	MIC ALC
Q27	Transistor	AF mute control switch
Q28	FET	AF mute switch
Q29	FET	Logic inverter
Q30	FET	MIC mute switch
Q31,32	Transistor	Audio processor clock shift switch
Q33	FET	TX HSD side tone mute
Q34	FET	Ext. alert input ATT switch
Q35	FET	AF mute switch
Q501	Transistor	F-IN amplifier
Q502	FET	TX VCO oscillator
Q503	FET	RX VCO oscillator
Q504	FET	TX/RX VCO DC switch
Q505	Transistor	Ripple filter
Q506	Transistor	RF buffer amplifier
Q507	Transistor	RF amplifier (Common)
Q601	FET	RF amplifier
Q602	FET	Pre-drive amplifier
Q603	FET	TX drive amplifier
Q604	FET	RF final amplifier
Q605	Transistor	APC voltage switch
Q606	FET	APC voltage switch
Q607	Transistor	APC DC switch
Q608	Transistor	APC mute switch
Q609	FET	APC mute switch
Q701	Transistor	2nd local tripler
Q702	Transistor	W/N switch / RX
Q703	Transistor	IF amplifier
Q704	FET	Mixer
Q705	FET	RF amplifier
D1	Diode	5M protect
D2	LED	TX/RX indicator
D4	Diode	Back light current control
D5	LED	LCD back light
D7	LED	LCD back light
D8,9	LED	10 key back light

Ref. No.	Use / Function	Operation / Condition
D12,13	LED	10 key back light
D14~16	Diode	Radio state detector
D17	Diode	RX DET mute control voltage discharge
D24~27	Diode	Key input detect
D28	Diode	AF reference voltage bias supply
D29	Diode	VOX level detector
D30,31	Diode	MIC input level detector
D32	Diode	VOX amplifier gain limiter
D33	Varistor	Surge absorber
D501	Diode	Fast lock up diode
D502,503	Diode	F-IN filter shift switch
D505	Variable capacitance diode	Frequency control / TX VCO
D507	Variable capacitance diode	Frequency control / TX VCO
D509	Variable capacitance diode	Frequency control / RX VCO
D511	Variable capacitance diode	Frequency control / RX VCO
D513	Variable capacitance diode	TX VCO modulator
D514	Diode	Ripple filter stabilization diode
D515	Diode	RX local switch
D516	Diode	TX RF switch
D517	Diode	Fast lock up diode
D601	Zener diode	APC voltage limiter
D604~606	Diode	ANT switch
D608	Diode	ANT switch
D701,702	Diode	Ceramic filter W/N switch
D703~708	Variable capacitance diode	RX BPF tuning
D901	Diode	Voltage limiter
TH501	Thermistor	TX temperature protect
TH701,702	Thermistor	Temperature compensation for ASQL
F901	Fuse	Fuse : 2.5A/32V/1608 size (F53-0324-05)

PARTS LIST

CAPACITORS

CC	45	TH	1H	220	J
1	2	3	4	5	6

1 = Type ... ceramic, electrolytic, etc.
2 = Shape ... round, square, etc.
3 = Temp. coefficient
4 = Voltage rating
5 = Value
6 = Tolerance

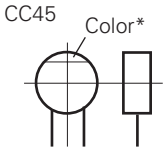

• Capacitor value

010 = 1pF
100 = 10pF
101 = 100pF
102 = 1000pF = 0.001µF
103 = 0.01µF

2 2 0 = 22pF
Multiplier
2nd number
1st number

• Temperature coefficient

1st Word	C	L	P	R	S	T	U
Color*	Black	Red	Orange	Yellow	Green	Blue	Violet
ppm/°C	0	–80	–150	–220	–330	–470	–750

2nd Word	G	H	J	K	L
ppm/°C	±30	±60	±120	±250	±500

Example : CC45TH = –470±60ppm/°C

• Tolerance (More than 10pF)

Code	C	D	G	J	K	M	X	Z	P	No code
(%)	±0.25	±0.5	±2	±5	±10	±20	+40 –20	+80 –20	+100 –0	More than 10µF : –10~+50 Less than 4.7µF : –10~+75

(Less than 10pF)

Code	B	C	D	F	G
(pF)	±0.1	±0.25	±0.5	±1	±2

• Voltage rating

1st word \ 2nd word	A	B	C	D	E	F	G	H	J	K	V
0	1.0	1.25	1.6	2.0	2.5	3.15	4.0	5.0	6.3	8.0	–
1	10	12.5	16	20	25	31.5	40	50	63	80	35
2	100	125	160	200	250	315	400	500	630	800	–
3	1000	1250	1600	2000	2500	2150	4000	5000	6300	8000	–

CHIP CAPACITORS

(EX) CC 73 F SL 1H 000 J
1 2 3 4 5 6 7
(Chip) (CH, RH, UJ, SL)

(EX) CK 73 F F 1H 000 Z
1 2 3 4 5 6 7
(Chip) (B, F)

Refer to the table above.
1 = Type
2 = Shape
3 = Dimension
4 = Temp. coefficient
5 = Voltage rating
6 = Value
7 = Tolerance

• Dimension

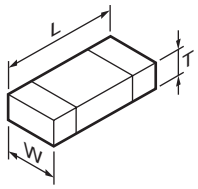

Chip capacitor

Code	L	W	T
Empty	5.6±0.5	5.0±0.5	Less than 2.0
A	4.5±0.5	3.2±0.4	Less than 2.0
B	4.5±0.5	2.0±0.3	Less than 2.0
C	4.5±0.5	1.25±0.2	Less than 1.25
D	3.2±0.4	2.5±0.3	Less than 1.5
E	3.2±0.2	1.6±0.2	Less than 1.25
F	2.0±0.3	1.25±0.2	Less than 1.25
G	1.6±0.2	0.8±0.2	Less than 1.0
H	1.0±0.05	0.5±0.05	0.5±0.05

Chip resistor

Code	L	W	T
E	3.2±0.2	1.6±0.2	1.0
F	2.0±0.3	1.25±0.2	1.0
G	1.6±0.2	0.8±0.2	0.5±0.1
H	1.0±0.05	0.5±0.05	0.35±0.05

RESISTORS

• Chip resistor (Carbon)

(EX) RD 73 E B 2B 000 J
1 2 3 4 5 6 7
(Chip) (B, F)

• Carbon resistor (Normal type)

(EX) RD 14 B B 2C 000 J
1 2 3 4 5 6 7
(Chip) (B, F)

1 = Type ... ceramic, electrolytic, etc.
2 = Shape ... round, square, etc.
3 = Dimension
4 = Temp. coefficient
5 = Voltage rating
6 = Value
7 = Tolerance

• Rating wattage

Code	Wattage	Code	Wattage	Code	Wattage
1J	1/16W	2C	1/6W	3A	1W
2A	1/10W	2E	1/4W	3D	2W
2B	1/8W	2H	1/2W		

TK-3170/3173

PARTS LIST

✻ New Parts. ⚠ indicates safety critical components.
Parts without **Parts No.** are not supplied.
Les articles non mentionnes dans le **Parts No.** ne sont pas fournis.
Teile ohne **Parts No.** werden nicht geliefert.

L : Scandinavia **K** : USA **P** : Canada
Y : PX (Far East, Hawaii) **T** : England **E** : Europe
Y : AAFES (Europe) **X** : Australia **M** : Other Areas

TK-3170/3173 (Y50-5860-XX)
TX-RX UNIT (X57-7010-XX)

Ref. No.	Address	New parts	Parts No.	Description	Desti-nation
TK-3170/3173					
1	1A		A02-3890-03	PLASTIC CABINET ASSY	K,73,K3
2	1B		A02-3891-13	PLASTIC CABINET ASSY	K4,K6,M
2	1B		A02-3891-13	PLASTIC CABINET ASSY	M3
3	3A		A10-4088-01	CHASSIS	
5	3A		B01-0694-03	ESCUTCHEON	
6	2D		B09-0686-03	CAP ACCESSORY	
7	2B		B11-1826-03	ILLUMINATION GUIDE	
8	2A		B11-1827-04	ILLUMINATION GUIDE	
9	2B		B11-1828-04	FILTER	
10	2B		B38-0901-05	LCD	
13	1A,1B		B43-1178-04	BADGE	
17	1C		B62-1809-10	INSTRUCTION MANUAL	K,K4,73
17	1C		B62-1809-10	INSTRUCTION MANUAL	K3,K6
17	1C		B62-1810-00	INSTRUCTION MANUAL	M,M3
20	2A		E04-0436-05	RF COAXIAL RECEPTACLE (SMA)	
21	2A		E23-1188-04	TERMINAL	
22	3A		E23-1189-14	TERMINAL	
23	2B		E29-1204-04	INTER CONNECTOR (LCD)	
24	2B		E29-1211-04	INTER CONNECTOR (4-KEY)	
25	2A		E37-1142-05	FLAT CABLE	
26	3A		E72-0421-03	TERMINAL BLOCK	
28	3A		F07-1890-04	COVER	
30	1A,1B		G10-1304-04	FIBROUS SHEET	
-			G10-1333-04	FIBROUS SHEET (CABINET ASSY)	
-			G11-4312-04	SHEET	
31	3A		G11-4315-04	SHEET	
32	2A		G11-4316-04	SHEET	
33	2B		G11-4335-14	SHEET	
34	1A,1B		G11-4351-04	SHEET	
35	2A		G13-1885-04	CUSHION	
36	3A		G13-2001-04	CUSHION	
38	2A		G53-1603-04	PACKING	
39	2B		G53-1650-12	PACKING	
40	1A		G53-1651-01	PACKING	K,73,K3
41	1B		G53-1652-11	PACKING	K4,K6,M
41	1B		G53-1652-11	PACKING	M3
42	2B		G53-1653-03	PACKING	
43	3A		G53-1654-04	PACKING	
44	3A		G53-1655-04	PACKING	
46	3C		H12-3150-02	PACKING FIXTURE	
47	2D		H25-0029-04	PROTECTION BAG (60/110/0.07)	
48	1D		H52-2067-02	ITEM CARTON CASE	K,K4,K3
48	1D		H52-2067-02	ITEM CARTON CASE	K6,M,M3
48	1D		H52-2068-02	ITEM CARTON CASE	73
50	2B		J19-5481-03	HOLDER	
51	2D		J19-5483-23	HOLDER ACCESSORY	
52	1B		J21-8488-03	MOUNTING HARDWARE	
53	2C		J29-0701-15	HOOK ACCESSORY	
54	3A		J82-0106-05	FPC	
55	2A		J99-0399-04	DOUBLE-SIDED TAPE (4x7mm)	
56	1B		K29-9278-13	KNOB (VOLUME)	
57	1B		K29-9339-03	KNOB (PTT)	
58	1B		K29-9340-03	KNOB (SELECTOR)	
59	1B		K29-9341-03	KEY TOP (SIDE)	
A	2A,3A		N09-2438-05	BINDING HEAD SCREW	
B	2A		N14-0583-04	CIRCULAR NUT	
C	3B		N14-0805-04	CIRCULAR NUT	
D	3A		N30-2610-48	PAN HEAD MACHINE SCREW	
E	3A		N30-3006-45	PAN HEAD MACHINE SCREW	
F	3A		N79-2030-48	PAN HEAD TAPTITE SCREW	
G	2A,2B		N83-2005-48	PAN HEAD TAPTITE SCREW	
61	3A		R31-0655-05	VARIABLE RESISTOR	
63	1B		T07-0369-05	SPEAKER	
64	2B		T91-0650-05	MIC ELEMENT	
66	2A		W02-3684-05	SELECTOR	
TX-RX UNIT (X57-7010-XX) -10 : TK-3170 K -11 : TK-3170 K4 -12 : TK-3170 K3 -13 : TK-3170 K6 -14 : TK-3173 K -21 : TK-3170 M -22 : TK-3170 M3					
D2			B30-2278-05	LED (RED/YELLOW)	
D5			B30-2210-05	LED (TLY)	
D7			B30-2210-05	LED (TLY)	
D8,9			B30-2050-05	LED	K4,K6,M
D8,9			B30-2050-05	LED	M3
D12,13			B30-2050-05	LED	K4,K6,M
D12,13			B30-2050-05	LED	M3
C2			CK73HB1H471K	CHIP C 470PF K	
C3			CK73FB1A475K	CHIP C 4.7UF K	
C4			CK73GB1E105K	CHIP C 1.0UF K	
C5,6			CK73HB1H471K	CHIP C 470PF K	
C7			CK73HB1A104K	CHIP C 0.10UF K	
C9			CK73GB1E105K	CHIP C 1.0UF K	
C11			CK73FB1A225K	CHIP C 2.2UF K	
C13			CK73HB1H471K	CHIP C 470PF K	
C14,15			CK73HB1E472K	CHIP C 4700PF K	
C16,17			CK73HB1H471K	CHIP C 470PF K	
C18			CK73HB1A104K	CHIP C 0.10UF K	
C19			CK73HB1H471K	CHIP C 470PF K	
C20			CK73HB1E472K	CHIP C 4700PF K	
C21			CK73HB1H471K	CHIP C 470PF K	
C22			CK73HB1E472K	CHIP C 4700PF K	
C23,24			CK73GB1E105K	CHIP C 1.0UF K	
C25			CK73HB1E472K	CHIP C 4700PF K	
C26			CK73HB1H471K	CHIP C 470PF K	
C27			C92-0712-05	CHIP-TAN 22UF 6.3WV	
C28-31			CK73HB1H471K	CHIP C 470PF K	
C32,33			CK73HB1A104K	CHIP C 0.10UF K	
C34			CK73HB1H471K	CHIP C 470PF K	
C35			CK73HB1A104K	CHIP C 0.10UF K	
C38,39			CK73HB1A473K	CHIP C 0.047UF K	
C40			CK73HB1H471K	CHIP C 470PF K	
C42			CK73HB1H681K	CHIP C 680PF K	

73 : TK-3173 K

PARTS LIST

TX-RX UNIT (X57-7010-XX)

Ref. No.	Address	New parts	Parts No.	Description			Destination
C43,44			CK73HB1C103K	CHIP C	0.010UF	K	
C45			C92-0712-05	CHIP-TAN	22UF	6.3WV	
C46			CK73HB1H471K	CHIP C	470PF	K	
C47			CK73GB1E105K	CHIP C	1.0UF	K	
C48-51			CK73HB1H471K	CHIP C	470PF	K	
C52			CK73HB1A104K	CHIP C	0.10UF	K	
C53			CK73HB1H471K	CHIP C	470PF	K	
C55			CK73GB1E105K	CHIP C	1.0UF	K	
C56			CK73HB1A104K	CHIP C	0.10UF	K	
C57			C92-0662-05	CHIP-TAN	15UF	6.3WV	
C58			CK73HB1H471K	CHIP C	470PF	K	
C59			CC73HCH1H220J	CHIP C	22PF	J	
C60			CC73HCH1H120J	CHIP C	12PF	J	
C61			CK73HB1A104K	CHIP C	0.10UF	K	
C62			CC73HCH1H010C	CHIP C	1.0PF	C	
C63			CC73HCH1H120J	CHIP C	12PF	J	
C65			CK73HB1A104K	CHIP C	0.10UF	K	
C66			CK73HB1C103K	CHIP C	0.010UF	K	
C67			C92-0514-05	CHIP-TAN	2.2UF	10WV	
C68			CK73HB1H471K	CHIP C	470PF	K	
C69			C92-0560-05	CHIP-TAN	10UF	6.3WV	
C70			CK73HB1E682K	CHIP C	6800PF	K	
C71			CK73HB1H392K	CHIP C	3900PF	K	
C72			CK73HB1H122K	CHIP C	1200PF	K	
C73			CC73HCH1H470J	CHIP C	47PF	J	
C74			CK73HB1H122K	CHIP C	1200PF	K	
C75			CK73HB1C153K	CHIP C	0.015UF	K	
C76			CK73HB1H332K	CHIP C	3300PF	K	
C77			CK73HB1C153K	CHIP C	0.015UF	K	
C78			CK73HB1H221K	CHIP C	220PF	K	
C79			CK73HB1H222K	CHIP C	2200PF	K	
C81			CK73HB1A104K	CHIP C	0.10UF	K	
C82			CC73HCH1H101J	CHIP C	100PF	J	
C84			CK73HB1H471K	CHIP C	470PF	K	
C85			CK73HB1C123K	CHIP C	0.012UF	K	
C87			CK73HB1A104K	CHIP C	0.10UF	K	
C88,89			CC73HCH1H010B	CHIP C	1.0PF	B	
C90,91			CK73GB1E104K	CHIP C	0.10UF	K	
C93			CK73GB1E105K	CHIP C	1.0UF	K	
C95			CK73HB1A224K	CHIP C	0.22UF	K	
C96			CK73GB1E105K	CHIP C	1.0UF	K	
C97			CC73HCH1H151J	CHIP C	150PF	J	
C98			CK73HB1A683K	CHIP C	0.068UF	K	
C99,100			CK73FB1A475K	CHIP C	4.7UF	K	
C102			CK73HB1C103K	CHIP C	0.010UF	K	
C104			CK73GB1E104K	CHIP C	0.10UF	K	
C106			CK73HB1H471K	CHIP C	470PF	K	
C107			CK73HB1A104K	CHIP C	0.10UF	K	
C108			CK73GB1E105K	CHIP C	1.0UF	K	
C109			CC73HCH1H100D	CHIP C	10PF	D	
C110			CK73HB1H471K	CHIP C	470PF	K	
C111			CK73HB1C103K	CHIP C	0.010UF	K	
C112			CC73HCH1H680J	CHIP C	68PF	J	
C113-115			CK73HB1A104K	CHIP C	0.10UF	K	
C116			CC73HCH1H220J	CHIP C	22PF	J	
C117			CK73GB1E105K	CHIP C	1.0UF	K	
C118			CK73HB1A104K	CHIP C	0.10UF	K	
C119			CK73HB1C103K	CHIP C	0.010UF	K	
C120			CK73FB1A225K	CHIP C	2.2UF	K	
C121			CK73HB1A393K	CHIP C	0.039UF	K	

Ref. No.	Address	New parts	Parts No.	Description			Destination
C122			CK73HB1H471K	CHIP C	470PF	K	
C123			CC73HCH1H680J	CHIP C	68PF	J	
C125			CK73HB1A104K	CHIP C	0.10UF	K	
C126			CC73HCH1H470J	CHIP C	47PF	J	
C127			CC73HCH1H181J	CHIP C	180PF	J	
C128			CK73HB1H471K	CHIP C	470PF	K	
C129			CK73GB1E105K	CHIP C	1.0UF	K	
C130			CK73HB1A104K	CHIP C	0.10UF	K	
C131			CK73HB1H821K	CHIP C	820PF	K	
C132			CK73HB1A104K	CHIP C	0.10UF	K	
C133			CK73GB0J475K	CHIP C	4.7UF	K	
C134			CK73HB1A473K	CHIP C	0.047UF	K	
C135			CK73GB1E105K	CHIP C	1.0UF	K	
C136			CK73HB1H561K	CHIP C	560PF	K	
C137			CK73HB1H471K	CHIP C	470PF	K	
C138			CK73HB1A104K	CHIP C	0.10UF	K	
C140			CK73HB1A104K	CHIP C	0.10UF	K	
C142,143			CK73GB1E105K	CHIP C	1.0UF	K	
C145-148			CK73HB1H471K	CHIP C	470PF	K	
C149			CK73HB1H221K	CHIP C	220PF	K	
C150,151			CK73FB1A225K	CHIP C	2.2UF	K	
C153			CK73GB1E105K	CHIP C	1.0UF	K	
C154,155			CK73HB1H471K	CHIP C	470PF	K	
C157			CK73GB1A224K	CHIP C	0.22UF	K	
C158			CK73HB1A104K	CHIP C	0.10UF	K	
C159			CC73HCH1H101J	CHIP C	100PF	J	
C161			CC73HCH1H101J	CHIP C	100PF	J	
C162			C92-0560-05	CHIP-TAN	10UF	6.3WV	
C166			CK73HB1H471K	CHIP C	470PF	K	
C168,169			CK73HB1A393K	CHIP C	0.039UF	K	
C170			CK73HB1H471K	CHIP C	470PF	K	
C171			C92-0560-05	CHIP-TAN	10UF	6.3WV	
C172			C92-0665-05	CHIP-TAN	100UF	6.3WV	
C173			CK73HB1H221K	CHIP C	220PF	K	
C174			CK73HB1H471K	CHIP C	470PF	K	
C175			CK73HB1C103K	CHIP C	0.010UF	K	
C176			CK73HB1A224K	CHIP C	0.22UF	K	
C177			CK73HB1A104K	CHIP C	0.10UF	K	
C178			CK73GB1E105K	CHIP C	1.0UF	K	
C181			CK73GB0J475K	CHIP C	4.7UF	K	
C182			CK73HB1H681K	CHIP C	680PF	K	
C183			CK73HB1H471K	CHIP C	470PF	K	
C184			CK73HB1H222K	CHIP C	2200PF	K	
C185			CK73HB1C103K	CHIP C	0.010UF	K	
C186			CC73HCH1H270J	CHIP C	27PF	J	
C187			CK73HB1C103K	CHIP C	0.010UF	K	
C188			CC73HCH1H270J	CHIP C	27PF	J	
C189			CK73GB1E104K	CHIP C	0.10UF	K	
C190,191			CK73HB1H471K	CHIP C	470PF	K	
C192			CK73HB1H102K	CHIP C	1000PF	K	
C196			CK73GB1C473K	CHIP C	0.047UF	K	
C197,198			CK73HB1H471K	CHIP C	470PF	K	
C199,200			CK73HB1A104K	CHIP C	0.10UF	K	K,K4,73
C199,200			CK73HB1A104K	CHIP C	0.10UF	K	M
C200			CK73HB1A104K	CHIP C	0.10UF	K	K3,K6,M3
C201			CK73HB1A224K	CHIP C	0.22UF	K	
C202			CK73GB1E105K	CHIP C	1.0UF	K	
C423			CK73FB1A475K	CHIP C	4.7UF	K	
C501			CK73HB1C103K	CHIP C	0.010UF	K	
C502			CC73HCH1H470J	CHIP C	47PF	J	

73 : TK-3173 K

PARTS LIST

TX-RX UNIT (X57-7010-XX)

Ref. No.	Address	New parts	Parts No.	Description			Desti-nation
C503			CC73HCH1H101J	CHIP C	100PF	J	
C504			CC73HCH1H100D	CHIP C	10PF	D	
C505			CC73HCH1H101J	CHIP C	100PF	J	
C506			CK73HB1C103K	CHIP C	0.010UF	K	
C507,508			CC73HCH1H101J	CHIP C	100PF	J	
C509			CC73HCH1H100D	CHIP C	10PF	D	
C512			CK73HB1C103K	CHIP C	0.010UF	K	
C513			CK73HB1H471K	CHIP C	470PF	K	
C514			CC73HCH1H101J	CHIP C	100PF	J	
C515			CK73HB1H471K	CHIP C	470PF	K	
C518			CC73HCH1H101J	CHIP C	100PF	J	
C520			CK73GB1E105K	CHIP C	1.0UF	K	
C522			CC73HCH1H050C	CHIP C	5.0PF	C	
C523			C92-0001-05	CHIP-TAN	0.1UF	35WV	
C524			CC73HCH1H101J	CHIP C	100PF	J	
C525			C92-0514-05	CHIP-TAN	2.2UF	10WV	K,K4,73
C525			C92-0514-05	CHIP-TAN	2.2UF	10WV	M
C525			C92-0519-05	CHIP-TAN	1.0UF	25WV	K3,K6,M3
C526			C92-0002-05	CHIP-TAN	0.22UF	35WV	
C527			CC73HCH1H050C	CHIP C	5.0PF	C	K,K4,73
C527			CC73HCH1H050C	CHIP C	5.0PF	C	M
C527			CC73HCH1H080D	CHIP C	8.0PF	D	K3,K6,M3
C529			CC73HCH1H020C	CHIP C	2.0PF	C	K3,K6,M3
C529			CC73HCH1H030C	CHIP C	3.0PF	C	K,K4,73
C529			CC73HCH1H030C	CHIP C	3.0PF	C	M
C530			CC73HCH1H101J	CHIP C	100PF	J	
C533			CC73HCH1H1R5C	CHIP C	1.5PF	C	
C536			CC73HCH1H030C	CHIP C	3.0PF	C	
C537			CC73HCH1H050C	CHIP C	5.0PF	C	
C538			CC73HCH1H101J	CHIP C	100PF	J	
C539			CC73HCH1H1R5B	CHIP C	1.5PF	B	
C540			CC73HCH1H020B	CHIP C	2.0PF	B	
C541			CC73HCH1H220J	CHIP C	22PF	J	
C542			CC73HCH1H030C	CHIP C	3.0PF	C	K3,K6,M3
C542			CC73HCH1H1R5C	CHIP C	1.5PF	C	K,K4,73
C542			CC73HCH1H1R5C	CHIP C	1.5PF	C	M
C544			CC73HCH1H1R5C	CHIP C	1.5PF	C	
C545			CC73HCH1H090D	CHIP C	9.0PF	D	K,K4,73
C545			CC73HCH1H090D	CHIP C	9.0PF	D	M
C545			CC73HCH1H120J	CHIP C	12PF	J	K3,K6,M3
C546			CC73HCH1H050C	CHIP C	5.0PF	C	K3,K6,M3
C546			CC73HCH1H1R5C	CHIP C	1.5PF	C	K,K4,73
C546			CC73HCH1H1R5C	CHIP C	1.5PF	C	M
C548			CC73HCH1H330J	CHIP C	33PF	J	K3,K6,M3
C548			CC73HCH1H470J	CHIP C	47PF	J	K,K4,73
C548			CC73HCH1H470J	CHIP C	47PF	J	M
C549			CC73HCH1H080B	CHIP C	8.0PF	B	K,K4,73
C549			CC73HCH1H080B	CHIP C	8.0PF	B	M
C549			CC73HCH1H150J	CHIP C	15PF	J	K3,K6,M3
C551			CC73HCH1H0R5B	CHIP C	0.5PF	B	
C552			CC73HCH1H101J	CHIP C	100PF	J	
C553			CC73HCH1H050B	CHIP C	5.0PF	B	K,K4,73
C553			CC73HCH1H050B	CHIP C	5.0PF	B	M
C553-555			CC73HCH1H050B	CHIP C	5.0PF	B	K3,K6,M3
C554-556			CC73HCH1H040B	CHIP C	4.0PF	B	K,K4,73
C554-556			CC73HCH1H040B	CHIP C	4.0PF	B	M
C556			CC73HCH1H060B	CHIP C	6.0PF	B	K3,K6,M3
C558			CC73HCH1H050B	CHIP C	5.0PF	B	K3,K6,M3
C558			CC73HCH1H060B	CHIP C	6.0PF	B	K,K4,73
C558			CC73HCH1H060B	CHIP C	6.0PF	B	M

Ref. No.	Address	New parts	Parts No.	Description			Desti-nation
C559			CC73HCH1H080B	CHIP C	8.0PF	B	K3,K6,M3
C559			CC73HCH1H090B	CHIP C	9.0PF	B	K,K4,73
C559			CC73HCH1H090B	CHIP C	9.0PF	B	M
C560			CC73HCH1H101J	CHIP C	100PF	J	
C562,563			CK73HB1H471K	CHIP C	470PF	K	
C564,565			CK73HB1A104K	CHIP C	0.10UF	K	
C566,567			CC73HCH1H0R5B	CHIP C	0.5PF	B	
C568			CK73HB1C103K	CHIP C	0.010UF	K	
C569			CK73HB1H471K	CHIP C	470PF	K	
C570			CK73HB1C103K	CHIP C	0.010UF	K	
C571			CK73HB1A104K	CHIP C	0.10UF	K	K,K4,73
C571			CK73HB1A104K	CHIP C	0.10UF	K	M
C571			CK73HB1H471K	CHIP C	470PF	K	K3,K6,M3
C572			C92-0628-05	CHIP-TAN	10UF	10WV	
C573			CK73HB1H471K	CHIP C	470PF	K	
C574			CC73HCH1H101J	CHIP C	100PF	J	K,K4,73
C574			CC73HCH1H101J	CHIP C	100PF	J	M
C574,575			CC73HCH1H100D	CHIP C	10PF	D	K3,K6,M3
C575			CC73HCH1H020B	CHIP C	2.0PF	B	K,K4,73
C575			CC73HCH1H020B	CHIP C	2.0PF	B	M
C576			CC73HCH1H010B	CHIP C	1.0PF	B	K,K4,73
C576			CC73HCH1H010B	CHIP C	1.0PF	B	M
C577,578			CK73HB1H471K	CHIP C	470PF	K	
C579			CC73HCH1H030B	CHIP C	3.0PF	B	K3,K6,M3
C579			CC73HCH1H040B	CHIP C	4.0PF	B	K,K4,73
C579			CC73HCH1H040B	CHIP C	4.0PF	B	M
C580,581			CK73HB1H471K	CHIP C	470PF	K	
C582			CC73HCH1H020B	CHIP C	2.0PF	B	
C583			CK73HB1A104K	CHIP C	0.10UF	K	
C584			CC73HCH1H100D	CHIP C	10PF	D	K3,K6,M3
C601			CK73HB1H471K	CHIP C	470PF	K	
C604			CK73HB1A224K	CHIP C	0.22UF	K	
C606			CK73HB1H471K	CHIP C	470PF	K	
C608			CK73HB1H471K	CHIP C	470PF	K	
C609			CC73HCH1H050C	CHIP C	5.0PF	C	
C610			CK73HB1H471K	CHIP C	470PF	K	K3,K6,M3
C611-613			CK73HB1H471K	CHIP C	470PF	K	
C615			CK73HB1H471K	CHIP C	470PF	K	
C617			CC73HCH1H150J	CHIP C	15PF	J	
C619			CC73HCH1H150J	CHIP C	15PF	J	K,K4,73
C619			CC73HCH1H150J	CHIP C	15PF	J	M
C622			CC73HCH1H101J	CHIP C	100PF	J	
C623			CK73HB1H102K	CHIP C	1000PF	K	
C625			CC73HCH1H070D	CHIP C	7.0PF	D	K,K4,73
C625			CC73HCH1H070D	CHIP C	7.0PF	D	M
C625			CC73HCH1H120J	CHIP C	12PF	J	K3,K6,M3
C626			CC73HCH1H101J	CHIP C	100PF	J	
C627			CC73HCH1H270J	CHIP C	27PF	J	K3,K6,M3
C627			CC73HCH1H390J	CHIP C	39PF	J	K,K4,73
C627			CC73HCH1H390J	CHIP C	39PF	J	M
C629			CC73HCH1H150J	CHIP C	15PF	J	K,K4,73
C629			CC73HCH1H150J	CHIP C	15PF	J	M
C629			CC73HCH1H270J	CHIP C	27PF	J	K3,K6,M3
C631			CC73HCH1H180J	CHIP C	18PF	J	
C632			C92-0514-05	CHIP-TAN	2.2UF	10WV	
C633			CK73HB1H471K	CHIP C	470PF	K	
C635			CC73HCH1H101J	CHIP C	100PF	J	
C636			CC73HCH1H180J	CHIP C	18PF	J	K3,K6,M3
C636			CC73HCH1H220J	CHIP C	22PF	J	K,K4,73
C636			CC73HCH1H220J	CHIP C	22PF	J	M

PARTS LIST

TX-RX UNIT (X57-7010-XX)

Ref. No.	Address	New parts	Parts No.	Description			Destination
C637			CK73HB1H102K	CHIP C	1000PF	K	
C638,639			CK73HB1H471K	CHIP C	470PF	K	
C641			CC73HCH1H101J	CHIP C	100PF	J	
C643			CK73HB1C103K	CHIP C	0.010UF	K	
C645			CC73GCH1H150J	CHIP C	15PF	J	K3,K6,M3
C645			CC73GCH1H270J	CHIP C	27PF	J	K,K4,73
C645			CC73GCH1H270J	CHIP C	27PF	J	M
C646			CK73HB1H471K	CHIP C	470PF	K	
C648			CK73HB1H471K	CHIP C	470PF	K	
C651			CK73HB1A104K	CHIP C	0.10UF	K	
C652			CC73GCH1H220J	CHIP C	22PF	J	K,K4,73
C652			CC73GCH1H220J	CHIP C	22PF	J	M
C655			CC73GCH1H270J	CHIP C	27PF	J	K3,K6,M3
C658			CK73HB1H471K	CHIP C	470PF	K	
C660			CC73GCH1H150J	CHIP C	15PF	J	K3,K6,M3
C660			CC73GCH1H220J	CHIP C	22PF	J	K,K4,73
C660			CC73GCH1H220J	CHIP C	22PF	J	M
C665			CK73HB1A104K	CHIP C	0.10UF	K	
C669			CC73GCH1H060B	CHIP C	6.0PF	B	K,K4,73
C669			CC73GCH1H060B	CHIP C	6.0PF	B	M
C669			CC73GCH1H080B	CHIP C	8.0PF	B	K3,K6,M3
C670			CC73GCH1H330J	CHIP C	33PF	J	K,K4,73
C670			CC73GCH1H330J	CHIP C	33PF	J	M
C670			CC73GCH1H101J	CHIP C	100PF	J	K3,K6,M3
C671			CC73GCH1H050B	CHIP C	5.0PF	B	K3,K6,M3
C671			CC73GCH1H3R5B	CHIP C	3.5PF	B	K,K4,73
C671			CC73GCH1H3R5B	CHIP C	3.5PF	B	M
C673			CK73HB1H471K	CHIP C	470PF	K	
C675			CC73GCH1H020B	CHIP C	2.0PF	B	K,K4,73
C675			CC73GCH1H020B	CHIP C	2.0PF	B	M
C675			CC73GCH1H040B	CHIP C	4.0PF	B	K3,K6,M3
C676			CC73GCH1H101J	CHIP C	100PF	J	
C677			CC73GCH1H050B	CHIP C	5.0PF	B	
C678			CC73GCH1H030B	CHIP C	3.0PF	B	K,K4,73
C678			CC73GCH1H030B	CHIP C	3.0PF	B	M
C678			CC73GCH1H040B	CHIP C	4.0PF	B	K3,K6,M3
C679			CC73GCH1H1R5B	CHIP C	1.5PF	B	
C680			CC73GCH1H040B	CHIP C	4.0PF	B	K,K4,73
C680			CC73GCH1H040B	CHIP C	4.0PF	B	M
C680			CC73GCH1H070B	CHIP C	7.0PF	B	K3,K6,M3
C681			CC73GCH1H020B	CHIP C	2.0PF	B	K,K4,73
C681			CC73GCH1H020B	CHIP C	2.0PF	B	M
C681			CC73GCH1H030B	CHIP C	3.0PF	B	K3,K6,M3
C682			CC73GCH1H050B	CHIP C	5.0PF	B	K,K4,73
C682			CC73GCH1H050B	CHIP C	5.0PF	B	M
C682			CC73GCH1H070B	CHIP C	7.0PF	B	K3,K6,M3
C683			CC73GCH1H020B	CHIP C	2.0PF	B	K,K4,73
C683			CC73GCH1H020B	CHIP C	2.0PF	B	M
C683			CC73GCH1H2R5B	CHIP C	2.5PF	B	K3,K6,M3
C684			CC73GCH1H1R5B	CHIP C	1.5PF	B	
C701,702			CK73HB1A104K	CHIP C	0.10UF	K	
C703			CC73HCH1H330J	CHIP C	33PF	J	
C704			CK73HB1C103K	CHIP C	0.010UF	K	
C705			CC73HCH1H220J	CHIP C	22PF	J	
C706			CC73HCH1H820J	CHIP C	82PF	J	
C707			CK73HB1H331K	CHIP C	330PF	K	
C708,709			CK73HB1A104K	CHIP C	0.10UF	K	
C710			CC73HCH1H390J	CHIP C	39PF	J	
C711			CC73HCH1H820J	CHIP C	82PF	J	
C712			CK73HB1H331K	CHIP C	330PF	K	

Ref. No.	Address	New parts	Parts No.	Description			Destination
C713			CK73HB1A104K	CHIP C	0.10UF	K	
C714			CC73HCH1H390J	CHIP C	39PF	J	
C715			CK73HB1H471K	CHIP C	470PF	K	
C716			CK73HB1H182K	CHIP C	1800PF	K	
C717			CK73GB1E105K	CHIP C	1.0UF	K	
C718			C92-0712-05	CHIP-TAN	22UF	6.3WV	
C719			CC73HCH1H820J	CHIP C	82PF	J	
C720			CK73HB1C103K	CHIP C	0.010UF	K	
C721			CK73HB1H471K	CHIP C	470PF	K	
C722			CK73HB1A104K	CHIP C	0.10UF	K	
C723			CK73HB1A333K	CHIP C	0.033UF	K	
C724			CC73HCH1H330J	CHIP C	33PF	J	
C725			CK73HB1A104K	CHIP C	0.10UF	K	
C726			CK73HB1C103K	CHIP C	0.010UF	K	
C727			CK73HB1H471K	CHIP C	470PF	K	
C728			CK73HB1C103K	CHIP C	0.010UF	K	
C730			CC73HCH1H080B	CHIP C	8.0PF	B	
C732,733			CK73HB1C103K	CHIP C	0.010UF	K	
C734,735			CK73HB1H471K	CHIP C	470PF	K	
C736			CK73HB1C103K	CHIP C	0.010UF	K	
C737			CC73HCH1H060B	CHIP C	6.0PF	B	
C738			CC73HCH1H120J	CHIP C	12PF	J	
C739			CC73HCH1H020B	CHIP C	2.0PF	B	
C740			CC73HCH1H100D	CHIP C	10PF	D	
C741			CK73HB1C103K	CHIP C	0.010UF	K	
C743			CC73HCH1H010B	CHIP C	1.0PF	B	
C744,745			CK73HB1H471K	CHIP C	470PF	K	
C746			CC73HCH1H040B	CHIP C	4.0PF	B	
C747,748			CK73HB1H471K	CHIP C	470PF	K	
C749			CC73HCH1H040B	CHIP C	4.0PF	B	K3,K6,M3
C749			CC73HCH1H3R5B	CHIP C	3.5PF	B	K,K4,73
C749			CC73HCH1H3R5B	CHIP C	3.5PF	B	M
C750			CC73HCH1H180J	CHIP C	18PF	J	K3,K6,M3
C750			CC73HCH1H330J	CHIP C	33PF	J	K,K4,73
C750			CC73HCH1H330J	CHIP C	33PF	J	M
C752			CC73HCH1H020B	CHIP C	2.0PF	B	
C754			CC73HCH1H020B	CHIP C	2.0PF	B	
C755			CC73HCH1H180J	CHIP C	18PF	J	K3,K6,M3
C755			CC73HCH1H330J	CHIP C	33PF	J	K,K4,73
C755			CC73HCH1H330J	CHIP C	33PF	J	M
C756			CC73HCH1H050B	CHIP C	5.0PF	B	
C757			CC73HCH1H020B	CHIP C	2.0PF	B	K3,K6,M3
C757			CC73HCH1H1R5B	CHIP C	1.5PF	B	K,K4,73
C757			CC73HCH1H1R5B	CHIP C	1.5PF	B	M
C758			CK73HB1H471K	CHIP C	470PF	K	
C759			CC73HCH1H020B	CHIP C	2.0PF	B	
C760			CK73HB1H471K	CHIP C	470PF	K	
C761			CC73HCH1H180J	CHIP C	18PF	J	K3,K6,M3
C761			CC73HCH1H330J	CHIP C	33PF	J	K,K4,73
C761			CC73HCH1H330J	CHIP C	33PF	J	M
C762			CC73HCH1H050B	CHIP C	5.0PF	B	
C763			CK73HB1H471K	CHIP C	470PF	K	
C765			CK73HB1H471K	CHIP C	470PF	K	
C767			CK73HB1H471K	CHIP C	470PF	K	
C769			CK73HB1H471K	CHIP C	470PF	K	
C771			CK73HB1A104K	CHIP C	0.10UF	K	
C772			CK73HB1H471K	CHIP C	470PF	K	
C773			CC73HCH1H030B	CHIP C	3.0PF	B	
C774			CC73HCH1H180J	CHIP C	18PF	J	K3,K6,M3
C774			CC73HCH1H330J	CHIP C	33PF	J	K,K4,73

73 : TK-3173 K

PARTS LIST

TX-RX UNIT (X57-7010-XX)

Ref. No.	Address	New parts	Parts No.	Description	Desti-nation
C774			CC73HCH1H330J	CHIP C 33PF J	M
C776			CC73HCH1H030B	CHIP C 3.0PF B	
C777			CK73HB1H471K	CHIP C 470PF K	
C778			CC73HCH1H030B	CHIP C 3.0PF B	
C779			CC73HCH1H180J	CHIP C 18PF J	K3,K6,M3
C779			CC73HCH1H330J	CHIP C 33PF J	K,K4,73
C779			CC73HCH1H330J	CHIP C 33PF J	M
C781			CK73HB1H471K	CHIP C 470PF K	
C782			CC73HCH1H220J	CHIP C 22PF J	K3,K6,M3
C782			CC73HCH1H330J	CHIP C 33PF J	K,K4,73
C782			CC73HCH1H330J	CHIP C 33PF J	M
C783			CC73HCH1H060B	CHIP C 6.0PF B	K,K4,73
C783			CC73HCH1H060B	CHIP C 6.0PF B	M
C783			CC73HCH1H080B	CHIP C 8.0PF B	K3,K6,M3
C784			CC73HCH1H100D	CHIP C 10PF D	
C901			CK73HB1H471K	CHIP C 470PF K	
C904			CK73HB1H471K	CHIP C 470PF K	
C906			CK73HB1C103K	CHIP C 0.010UF K	
C917			CK73HB1A104K	CHIP C 0.10UF K	
C921			CK73HB1C223K	CHIP C 0.022UF K	
C923-926			CK73HB1H471K	CHIP C 470PF K	
TC501,502			C05-0384-05	CERAMIC TRIMMER (10PF)	
101	2A		E37-1141-15	FLAT CABLE	
-		✻	E37-1145-05	PROCESSED LEAD WIRE	
CN1			E41-2440-05	FLAT CABLE CONNECTOR	
CN8			E40-5915-05	FLAT CABLE CONNECTOR	
CN18			E40-6420-05	FLAT CABLE CONNECTOR	
CN60			E40-5932-05	SOCKET FOR PIN ASSY	
CN71			E40-5915-05	FLAT CABLE CONNECTOR	
CN901			E40-6420-05	FLAT CABLE CONNECTOR	
J1			E11-0457-05	PHONE JACK (2.5/3.5)	
-			F20-3369-04	INSULATING SHEET	
F901			F53-0324-05	FUSE	
CD701			L79-1474-05	TUNING COIL	
CF701			L72-1010-05	CERAMIC FILTER	
CF702			L72-1012-05	CERAMIC FILTER	
L1			L92-0140-05	CHIP FERRITE	
L2-5			L92-0138-05	CHIP FERRITE	
L8			L92-0138-05	CHIP FERRITE	
L10			L92-0140-05	CHIP FERRITE	
L11			L92-0149-05	CHIP FERRITE	
L12,13			L92-0419-15	CHIP FERRITE	
L14,15			L92-0138-05	CHIP FERRITE	
L501			L41-4795-39	SMALL FIXED INDUCTOR (4.7UH)	
L502			L40-3363-57	SMALL FIXED INDUCTOR (3.3NH)	K,K4,73
L502			L40-3363-57	SMALL FIXED INDUCTOR (3.3NH)	M
L502			L40-3963-57	SMALL FIXED INDUCTOR (3.9NH)	K3,K6,M3
L503			L92-0138-05	CHIP FERRITE	
L505			L40-2285-92	SMALL FIXED INDUCTOR (220NH)	K3,K6,M3
L505,506			L40-2285-92	SMALL FIXED INDUCTOR (220NH)	K,K4,73
L505,506			L40-2285-92	SMALL FIXED INDUCTOR (220NH)	M
L506			L40-2785-92	SMALL FIXED INDUCTOR (270NH)	K3,K6,M3
L507			L40-3363-57	SMALL FIXED INDUCTOR (3.3NH)	K,K4,73
L507			L40-3363-57	SMALL FIXED INDUCTOR (3.3NH)	M
L507			L40-3963-57	SMALL FIXED INDUCTOR (3.9NH)	K3,K6,M3
L508			L40-2285-92	SMALL FIXED INDUCTOR (220NH)	K3,K6,M3
L508,509			L40-8275-92	SMALL FIXED INDUCTOR (82NH)	K,K4,73
L508,509			L40-8275-92	SMALL FIXED INDUCTOR (82NH)	M

Ref. No.	Address	New parts	Parts No.	Description	Desti-nation
L509			L40-1285-92	SMALL FIXED INDUCTOR (120NH)	K3,K6,M3
L511			L40-1275-57	SMALL FIXED INDUCTOR (12.0NH)	K,K4,73
L511			L40-1275-57	SMALL FIXED INDUCTOR (12.0NH)	M
L511			L40-1575-57	SMALL FIXED INDUCTOR (15.0NH)	K3,K6,M3
L512			L40-1875-54	SMALL FIXED INDUCTOR (18NH)	K,K4,73
L512			L40-1875-54	SMALL FIXED INDUCTOR (18NH)	M
L512			L40-2275-54	SMALL FIXED INDUCTOR (22NH)	K3,K6,M3
L513			L41-2278-14	SMALL FIXED INDUCTOR (22NH)	K,K4,73
L513			L41-2278-14	SMALL FIXED INDUCTOR (22NH)	M
L513			L41-2778-14	SMALL FIXED INDUCTOR (27NH)	K3,K6,M3
L514			L41-1585-45	SMALL FIXED INDUCTOR (150NH)	K,K4,73
L514			L41-1585-45	SMALL FIXED INDUCTOR (150NH)	M
L514,515		✻	L41-2285-45	SMALL FIXED INDUCTOR (220NH)	K3,K6,M3
L515		✻	L41-1885-45	SMALL FIXED INDUCTOR (180NH)	K,K4,73
L515		✻	L41-1885-45	SMALL FIXED INDUCTOR (180NH)	M
L517		✻	L41-2785-45	SMALL FIXED INDUCTOR (270NH)	
L518			L40-1585-92	SMALL FIXED INDUCTOR (150NH)	K,K4,73
L518			L40-1585-92	SMALL FIXED INDUCTOR (150NH)	M
L518			L40-2785-92	SMALL FIXED INDUCTOR (270NH)	K3,K6,M3
L519			L92-0138-05	CHIP FERRITE	
L520			L40-6875-57	SMALL FIXED INDUCTOR (68.0NH)	K,K4,73
L520			L40-6875-57	SMALL FIXED INDUCTOR (68.0NH)	M
L521			L40-2775-57	SMALL FIXED INDUCTOR (27.0NH)	
L522,523			L40-4775-57	SMALL FIXED INDUCTOR (47.0NH)	K,K4,73
L522,523			L40-4775-57	SMALL FIXED INDUCTOR (47.0NH)	M
L524			L40-2275-57	SMALL FIXED INDUCTOR (22.0NH)	K3,K6,M3
L601			L40-2775-57	SMALL FIXED INDUCTOR (27.0NH)	
L602			L40-1875-57	SMALL FIXED INDUCTOR (18.0NH)	
L603			L92-0138-05	CHIP FERRITE	
L604			L40-1875-57	SMALL FIXED INDUCTOR (18.0NH)	K,K4,73
L604			L40-1875-57	SMALL FIXED INDUCTOR (18.0NH)	M
L605			L40-6865-57	SMALL FIXED INDUCTOR (6.8NH)	
L606		✻	L41-1575-45	SMALL FIXED INDUCTOR (15NH)	
L607			L92-0149-05	CHIP FERRITE	
L608			L40-1263-92	SMALL FIXED INDUCTOR (1.20NH)	K3,K6,M3
L611			L34-4576-05	AIR-CORE COIL	
L612			L92-0149-05	CHIP FERRITE	
L613			L41-5668-14	SMALL FIXED INDUCTOR (5.6NH)	
L614		✻	L41-2285-45	SMALL FIXED INDUCTOR (220NH)	
L615-618			L34-4564-05	AIR-CORE COIL	
L619			L41-1092-44	SMALL FIXED INDUCTOR (1UH)	
L701			L40-1885-92	SMALL FIXED INDUCTOR (180NH)	
L702			L40-1085-57	SMALL FIXED INDUCTOR (100NH)	
L703			L40-1591-86	SMALL FIXED INDUCTOR (1.5UH)	
L704			L92-0138-05	CHIP FERRITE	
L705			L41-5685-39	SMALL FIXED INDUCTOR (0.56UH)	
L706			L40-2785-92	SMALL FIXED INDUCTOR (270NH)	
L707			L40-1875-57	SMALL FIXED INDUCTOR (18.0NH)	
L709			L40-2775-57	SMALL FIXED INDUCTOR (27.0NH)	K,K4,73
L709			L40-2775-57	SMALL FIXED INDUCTOR (27.0NH)	M
L709			L40-3375-57	SMALL FIXED INDUCTOR (33.0NH)	K3,K6,M3
L711-713			L41-8268-14	SMALL FIXED INDUCTOR (8.2NH)	
L714			L92-0138-05	CHIP FERRITE	
L715		✻	L41-2785-45	SMALL FIXED INDUCTOR (270NH)	
L717,718			L41-8268-14	SMALL FIXED INDUCTOR (8.2NH)	
L719		✻	L41-4775-45	SMALL FIXED INDUCTOR (47NH)	
L720			L40-6865-57	SMALL FIXED INDUCTOR (6.8NH)	
L901			L92-0149-05	CHIP FERRITE	
X1			L77-1950-05	CRYSTAL RESONATOR (11.0592MHZ)	
X2			L77-1976-05	CRYSTAL RESONATOR (3.6864MHZ)	

PARTS LIST

TX-RX UNIT (X57-7010-XX)

Ref. No.	Address	New parts	Parts No.	Description	Destination
X501			L77-1971-05	TCXO (16.8MHZ)	
XF701			L71-0617-25	MCF (49.95MHZ)	
CP1			RK74HB1J473J	CHIP-COM 47K J 1/16W	
CP3,4			RK75HA1J102J	CHIP-COM 1.0K J 1/16W	
CP5			RK74HB1J102J	CHIP-COM 1.0K J 1/16W	
CP7,8			RK75HA1J102J	CHIP-COM 1.0K J 1/16W	
CP10			RK74HB1J102J	CHIP-COM 1.0K J 1/16W	
CP11			RK75HA1J102J	CHIP-COM 1.0K J 1/16W	
CP12,13			RK74HB1J102J	CHIP-COM 1.0K J 1/16W	
CP16			RK74HB1J102J	CHIP-COM 1.0K J 1/16W	
CP18			RK74HB1J102J	CHIP-COM 1.0K J 1/16W	
CP19			RK75HA1J473J	CHIP-COM 47K J 1/16W	
CP22-24			RK74HB1J102J	CHIP-COM 1.0K J 1/16W	
CP28			RK74HB1J102J	CHIP-COM 1.0K J 1/16W	
CP30			RK74HB1J102J	CHIP-COM 1.0K J 1/16W	
CP32			RK74HB1J102J	CHIP-COM 1.0K J 1/16W	
CP34			RK74HB1J102J	CHIP-COM 1.0K J 1/16W	
CP36			RK74HB1J102J	CHIP-COM 1.0K J 1/16W	
CP38			RK74HB1J102J	CHIP-COM 1.0K J 1/16W	
CP40			RK74HB1J102J	CHIP-COM 1.0K J 1/16W	
CP42,43			RK75HA1J102J	CHIP-COM 1.0K J 1/16W	
CP44			RK75HA1J474J	CHIP-COM 470K J 1/16W	
CP45-47			RK75HA1J102J	CHIP-COM 1.0K J 1/16W	
CP48,49			RK74HB1J102J	CHIP-COM 1.0K J 1/16W	
CP50			RK75HA1J102J	CHIP-COM 1.0K J 1/16W	
CP54			RK75HA1J473J	CHIP-COM 47K J 1/16W	
R1			R92-1252-05	CHIP R 0 OHM J 1/16W	
R2			RK73HB1J153J	CHIP R 15K J 1/16W	
R7			RK73HB1J102J	CHIP R 1.0K J 1/16W	
R8			RK73HB1J272J	CHIP R 2.7K J 1/16W	
R9			RK73HB1J332J	CHIP R 3.3K J 1/16W	
R11			RK73HB1J473J	CHIP R 47K J 1/16W	
R12			RK73HB1J334J	CHIP R 330K J 1/16W	
R13			RK73HB1J332J	CHIP R 3.3K J 1/16W	
R14			RK73HB1J102J	CHIP R 1.0K J 1/16W	
R15			RK73HB1J272J	CHIP R 2.7K J 1/16W	
R16			RK73HB1J331J	CHIP R 330 J 1/16W	
R17			RK73HB1J821J	CHIP R 820 J 1/16W	
R18			RK73GB1J100J	CHIP R 10 J 1/16W	
R20			RK73HB1J103J	CHIP R 10K J 1/16W	
R21			RK73HB1J821J	CHIP R 820 J 1/16W	
R22,23			R92-1368-05	CHIP R 0 OHM	
R24			RK73HB1J224J	CHIP R 220K J 1/16W	
R25			RK73HB1J153J	CHIP R 15K J 1/16W	
R26			R92-1368-05	CHIP R 0 OHM	
R27,28			RK73HH1J474D	CHIP R 470K D 1/16W	
R31			RK73HB1J103J	CHIP R 10K J 1/16W	
R36			RK73GB1J433J	CHIP R 43K J 1/16W	
R37			RK73HB1J103J	CHIP R 10K J 1/16W	
R39,40			RK73HB1J473J	CHIP R 47K J 1/16W	
R42-44			RK73HB1J103J	CHIP R 10K J 1/16W	
R45,46			RK73HB1J102J	CHIP R 1.0K J 1/16W	
R48-52			RK73HB1J473J	CHIP R 47K J 1/16W	
R53			RK73HB1J474J	CHIP R 470K J 1/16W	
R54			RK73HB1J102J	CHIP R 1.0K J 1/16W	
R55,56			RK73HB1J474J	CHIP R 470K J 1/16W	
R57			RK73HB1J103J	CHIP R 10K J 1/16W	
R58,59			RK73HB1J473J	CHIP R 47K J 1/16W	
R61			RK73HB1J331J	CHIP R 330 J 1/16W	

Ref. No.	Address	New parts	Parts No.	Description	Destination
R62			RK73HB1J103J	CHIP R 10K J 1/16W	
R63			RK73HB1J332J	CHIP R 3.3K J 1/16W	
R64			RK73HB1J102J	CHIP R 1.0K J 1/16W	
R65,66			RK73HB1J473J	CHIP R 47K J 1/16W	
R67			RK73HB1J472J	CHIP R 4.7K J 1/16W	
R68			RK73GB1J181J	CHIP R 180 J 1/16W	
R69			RK73HB1J102J	CHIP R 1.0K J 1/16W	
R71			RK73HB1J102J	CHIP R 1.0K J 1/16W	
R72			RK73GB1J181J	CHIP R 180 J 1/16W	
R73,74			RK73HB1J474J	CHIP R 470K J 1/16W	
R75			RK73GB1J391J	CHIP R 390 J 1/16W	K4,K6,M
R75			RK73GB1J391J	CHIP R 390 J 1/16W	M3
R76-80			RK73HB1J102J	CHIP R 1.0K J 1/16W	
R82			RK73GB1J391J	CHIP R 390 J 1/16W	K4,K6,M
R82			RK73GB1J391J	CHIP R 390 J 1/16W	M3
R83			R92-1252-05	CHIP R 0 OHM J 1/16W	
R84			RK73HB1J184J	CHIP R 180K J 1/16W	
R89			RK73HB1J102J	CHIP R 1.0K J 1/16W	
R90			RK73HB1J394J	CHIP R 390K J 1/16W	
R91			RK73HB1J332J	CHIP R 3.3K J 1/16W	
R92			RK73HB1J473J	CHIP R 47K J 1/16W	
R93			RK73HB1J393J	CHIP R 39K J 1/16W	
R94			RK73HB1J684J	CHIP R 680K J 1/16W	
R95,96			RK73HB1J102J	CHIP R 1.0K J 1/16W	
R97			RK73HB1J474J	CHIP R 470K J 1/16W	
R98,99			RK73HB1J473J	CHIP R 47K J 1/16W	
R100			RK73HB1J223J	CHIP R 22K J 1/16W	
R101			RK73HB1J103J	CHIP R 10K J 1/16W	
R102			RK73HB1J473J	CHIP R 47K J 1/16W	
R103			RK73HB1J105J	CHIP R 1.0M J 1/16W	
R104			RK73HB1J103J	CHIP R 10K J 1/16W	
R105			RK73HB1J472J	CHIP R 4.7K J 1/16W	
R106			RK73HB1J473J	CHIP R 47K J 1/16W	
R107			RK73HB1J564J	CHIP R 560K J 1/16W	
R108			RK73HB1J334J	CHIP R 330K J 1/16W	
R109			RK73HB1J684J	CHIP R 680K J 1/16W	
R111			RK73HB1J564J	CHIP R 560K J 1/16W	
R112			RK73HB1J334J	CHIP R 330K J 1/16W	
R113			R92-1368-05	CHIP R 0 OHM	
R114			RK73HB1J184J	CHIP R 180K J 1/16W	
R115			RK73GB1J103J	CHIP R 10K J 1/16W	
R116			RK73HB1J393J	CHIP R 39K J 1/16W	
R117			RK73HB1J683J	CHIP R 68K J 1/16W	
R119			RK73HB1J101J	CHIP R 100 J 1/16W	
R121			RK73HB1J184J	CHIP R 180K J 1/16W	
R122			RK73HB1J154J	CHIP R 150K J 1/16W	
R125			RK73GB1J152J	CHIP R 1.5K J 1/16W	
R129			RK73HB1J105J	CHIP R 1.0M J 1/16W	
R130			RK73HB1J474J	CHIP R 470K J 1/16W	
R131,132			R92-1368-05	CHIP R 0 OHM	
R134			RK73HB1J104J	CHIP R 100K J 1/16W	
R135			R92-1368-05	CHIP R 0 OHM	
R137			RK73HB1J223J	CHIP R 22K J 1/16W	
R139			RK73HB1J103J	CHIP R 10K J 1/16W	
R140			RK73HB1J102J	CHIP R 1.0K J 1/16W	
R141			RK73HB1J105J	CHIP R 1.0M J 1/16W	
R142			RK73HB1J223J	CHIP R 22K J 1/16W	
R143			RK73HB1J473J	CHIP R 47K J 1/16W	
R144			RK73HB1J472J	CHIP R 4.7K J 1/16W	
R145			RK73HB1J154J	CHIP R 150K J 1/16W	

PARTS LIST

TX-RX UNIT (X57-7010-XX)

Ref. No.	Address	New parts	Parts No.	Description				Desti-nation
R146			RK73HB1J105J	CHIP R	1.0M	J	1/16W	
R147			RK73HB1J103J	CHIP R	10K	J	1/16W	
R149			RK73HB1J105J	CHIP R	1.0M	J	1/16W	
R150			RK73HB1J153J	CHIP R	15K	J	1/16W	
R151			RK73HB1J183J	CHIP R	18K	J	1/16W	
R152			RK73HB1J105J	CHIP R	1.0M	J	1/16W	
R153			RK73HB1J332J	CHIP R	3.3K	J	1/16W	
R154			RK73HB1J333J	CHIP R	33K	J	1/16W	
R155			RK73HB1J223J	CHIP R	22K	J	1/16W	
R156,157		✻	RK73HB1J304J	CHIP R	300K	J	1/16W	
R158			RK73HB1J334J	CHIP R	330K	J	1/16W	
R159			RK73HB1J474J	CHIP R	470K	J	1/16W	
R160			RK73HB1J224J	CHIP R	220K	J	1/16W	
R161,162			RK73HB1J124J	CHIP R	120K	J	1/16W	
R163			RK73HB1J393J	CHIP R	39K	J	1/16W	
R164			RK73HB1J184J	CHIP R	180K	J	1/16W	
R165			RK73HB1J154J	CHIP R	150K	J	1/16W	
R166			RK73HB1J103J	CHIP R	10K	J	1/16W	
R167			R92-1252-05	CHIP R	0 OHM	J	1/16W	
R168			RK73HB1J474J	CHIP R	470K	J	1/16W	
R169			RK73HB1J223J	CHIP R	22K	J	1/16W	
R170			R92-1252-05	CHIP R	0 OHM	J	1/16W	
R171			R92-1368-05	CHIP R	0 OHM			
R172			RK73HB1J684J	CHIP R	680K	J	1/16W	
R173			RK73HB1J184J	CHIP R	180K	J	1/16W	
R174			RK73HB1J123J	CHIP R	12K	J	1/16W	
R175			RK73HB1J103J	CHIP R	10K	J	1/16W	
R176			RK73HB1J683J	CHIP R	68K	J	1/16W	
R177			R92-1368-05	CHIP R	0 OHM			
R178			RK73HB1J102J	CHIP R	1.0K	J	1/16W	
R180			RK73HB1J103J	CHIP R	10K	J	1/16W	
R181			R92-1368-05	CHIP R	0 OHM			
R183			RK73HB1J103J	CHIP R	10K	J	1/16W	
R184			R92-1368-05	CHIP R	0 OHM			
R187			R92-1368-05	CHIP R	0 OHM			
R191			R92-1368-05	CHIP R	0 OHM			
R192,193			RK73HB1J104J	CHIP R	100K	J	1/16W	
R194,195			RK73HB1J102J	CHIP R	1.0K	J	1/16W	
R196			RK73HB1J151J	CHIP R	150	J	1/16W	
R198			R92-1252-05	CHIP R	0 OHM	J	1/16W	
R199			RK73HB1J472J	CHIP R	4.7K	J	1/16W	
R200			RK73HB1J473J	CHIP R	47K	J	1/16W	
R202			RK73HB1J102J	CHIP R	1.0K	J	1/16W	
R203			RK73HB1J222J	CHIP R	2.2K	J	1/16W	
R204			RK73HB1J104J	CHIP R	100K	J	1/16W	
R206			R92-1368-05	CHIP R	0 OHM			
R207			RK73HB1J154J	CHIP R	150K	J	1/16W	
R210			RK73HB1J471J	CHIP R	470	J	1/16W	
R211			RK73HB1J474J	CHIP R	470K	J	1/16W	
R212			RK73GB1J101J	CHIP R	100	J	1/16W	
R213			RK73HB1J101J	CHIP R	100	J	1/16W	
R214			RK73HB1J182J	CHIP R	1.8K	J	1/16W	
R215			RK73HB1J334J	CHIP R	330K	J	1/16W	
R216			RK73HB1J274J	CHIP R	270K	J	1/16W	
R218			R92-1252-05	CHIP R	0 OHM	J	1/16W	
R220			RK73GB1J102J	CHIP R	1.0K	J	1/16W	
R221			RK73HB1J473J	CHIP R	47K	J	1/16W	
R222,223			RK73HB1J102J	CHIP R	1.0K	J	1/16W	
R224			RK73HB1J104J	CHIP R	100K	J	1/16W	
R225			RK73HB1J154J	CHIP R	150K	J	1/16W	

Ref. No.	Address	New parts	Parts No.	Description				Desti-nation
R226			RK73HB1J184J	CHIP R	180K	J	1/16W	
R229			RK73HB1J473J	CHIP R	47K	J	1/16W	
R230			RK73HB1J123J	CHIP R	12K	J	1/16W	
R232			RK73HB1J823J	CHIP R	82K	J	1/16W	
R236			RK73HB1J124J	CHIP R	120K	J	1/16W	
R239			RK73HB1J104J	CHIP R	100K	J	1/16W	
R240			RK73HB1J474J	CHIP R	470K	J	1/16W	
R241			RK73HB1J473J	CHIP R	47K	J	1/16W	
R242			RK73HB1J104J	CHIP R	100K	J	1/16W	
R243			RK73HB1J474J	CHIP R	470K	J	1/16W	
R244			RK73HB1J473J	CHIP R	47K	J	1/16W	
R245			RK73HB1J103J	CHIP R	10K	J	1/16W	
R246			RK73HB1J223J	CHIP R	22K	J	1/16W	
R247			RK73HB1J184J	CHIP R	180K	J	1/16W	
R248			R92-1252-05	CHIP R	0 OHM	J	1/16W	
R250			R92-1252-05	CHIP R	0 OHM	J	1/16W	
R251			RK73HB1J474J	CHIP R	470K	J	1/16W	
R254,255			RK73HB1J474J	CHIP R	470K	J	1/16W	
R256-258			R92-1252-05	CHIP R	0 OHM	J	1/16W	
R259			RK73HB1J103J	CHIP R	10K	J	1/16W	
R261			RK73HB1J103J	CHIP R	10K	J	1/16W	
R262			RK73HB1J473J	CHIP R	47K	J	1/16W	
R501			R92-1368-05	CHIP R	0 OHM			
R502			RK73HB1J102J	CHIP R	1.0K	J	1/16W	
R503			RK73HB1J470J	CHIP R	47	J	1/16W	
R504			RK73HB1J103J	CHIP R	10K	J	1/16W	
R505			RK73HB1J102J	CHIP R	1.0K	J	1/16W	
R506			RK73HB1J154J	CHIP R	150K	J	1/16W	
R507			RK73HB1J101J	CHIP R	100	J	1/16W	
R508			RK73HB1J330J	CHIP R	33	J	1/16W	K,K4,73
R508			RK73HB1J330J	CHIP R	33	J	1/16W	M
R508			RK73HB1J470J	CHIP R	47	J	1/16W	K3,K6,M3
R509			RK73HB1J272J	CHIP R	2.7K	J	1/16W	
R510-512			R92-1368-05	CHIP R	0 OHM			
R513			RK73HB1J470J	CHIP R	47	J	1/16W	
R514			RK73HB1J102J	CHIP R	1.0K	J	1/16W	
R515			RK73HB1J331J	CHIP R	330	J	1/16W	K3,K6,M3
R515			RK73HB1J561J	CHIP R	560	J	1/16W	K,K4,73
R515			RK73HB1J561J	CHIP R	560	J	1/16W	M
R516			R92-1368-05	CHIP R	0 OHM			
R517			RK73HB1J103J	CHIP R	10K	J	1/16W	
R518			RK73HB1J101J	CHIP R	100	J	1/16W	
R519,520			RK73HB1J103J	CHIP R	10K	J	1/16W	
R521			RK73HB1J101J	CHIP R	100	J	1/16W	K,K4,73
R521			RK73HB1J101J	CHIP R	100	J	1/16W	M
R521,522			RK73HB1J101J	CHIP R	100	J	1/16W	K3,K6,M3
R522			RK73HB1J220J	CHIP R	22	J	1/16W	K,K4,73
R522			RK73HB1J220J	CHIP R	22	J	1/16W	M
R523			RK73HB1J473J	CHIP R	47K	J	1/16W	
R525			RK73HB1J101J	CHIP R	100	J	1/16W	
R527			RK73HB1J104J	CHIP R	100K	J	1/16W	K3,K6,M3
R527			RK73HB1J224J	CHIP R	220K	J	1/16W	K,K4,73
R527			RK73HB1J224J	CHIP R	220K	J	1/16W	M
R529			RK73HB1J151J	CHIP R	150	J	1/16W	K,K4,73
R529			RK73HB1J151J	CHIP R	150	J	1/16W	M
R529,530			RK73HB1J181J	CHIP R	180	J	1/16W	K3,K6,M3
R530			RK73HB1J181J	CHIP R	180	J	1/16W	K,K4,73
R530			RK73HB1J181J	CHIP R	180	J	1/16W	M
R531,532			RK73HB1J220J	CHIP R	22	J	1/16W	
R533			RK73HB1J472J	CHIP R	4.7K	J	1/16W	

PARTS LIST

TX-RX UNIT (X57-7010-XX)

Ref. No.	Address	New parts	Parts No.	Description				Destination
R534			RK73HB1J154J	CHIP R	150K	J	1/16W	
R535			RK73HB1J101J	CHIP R	100	J	1/16W	
R541			RK73HB1J154J	CHIP R	150K	J	1/16W	
R542			RK73HB1J331J	CHIP R	330	J	1/16W	K3,K6,M3
R542			RK73HB1J680J	CHIP R	68	J	1/16W	K,K4,73
R542			RK73HB1J680J	CHIP R	68	J	1/16W	M
R544			RK73HB1J470J	CHIP R	47	J	1/16W	
R545			RK73HH1J333D	CHIP R	33K	D	1/16W	
R546			RK73HH1J104D	CHIP R	100K	D	1/16W	
R547			RK73HB1J472J	CHIP R	4.7K	J	1/16W	
R548			RK73HB1J470J	CHIP R	47	J	1/16W	K,K4,73
R548			RK73HB1J470J	CHIP R	47	J	1/16W	M
R548			R92-1368-05	CHIP R	0 OHM			K3,K6,M3
R549			RK73HB1J681J	CHIP R	680	J	1/16W	K,K4,73
R549			RK73HB1J681J	CHIP R	680	J	1/16W	M
R550			R92-1252-05	CHIP R	0 OHM	J	1/16W	
R551,552			R92-1368-05	CHIP R	0 OHM			K3,K6,M3
R601			RK73HB1J472J	CHIP R	4.7K	J	1/16W	
R602			R92-1368-05	CHIP R	0 OHM			K3,K6,M3
R603			RK73HB1J102J	CHIP R	1.0K	J	1/16W	
R604			RK73HB1J333J	CHIP R	33K	J	1/16W	
R605			RK73HB1J101J	CHIP R	100	J	1/16W	K3,K6,M3
R605			RK73HB1J470J	CHIP R	47	J	1/16W	K,K4,73
R605			RK73HB1J470J	CHIP R	47	J	1/16W	M
R606			RK73HB1J471J	CHIP R	470	J	1/16W	K3,K6,M3
R607			RK73HB1J220J	CHIP R	22	J	1/16W	
R608			RK73HB1J331J	CHIP R	330	J	1/16W	
R609			RK73HB1J330J	CHIP R	33	J	1/16W	
R610			RK73HB1J331J	CHIP R	330	J	1/16W	
R611			RK73HB1J823J	CHIP R	82K	J	1/16W	
R612			RK73HB1J221J	CHIP R	220	J	1/16W	
R613			RK73HB1J563J	CHIP R	56K	J	1/16W	
R614			RK73HB1J471J	CHIP R	470	J	1/16W	
R618			R92-1368-05	CHIP R	0 OHM			
R619			RK73HB1J103J	CHIP R	10K	J	1/16W	
R620			R92-1368-05	CHIP R	0 OHM			
R621			RK73EB2ER39K	CHIP R	0.39	K	1/4W	
R622			RK73HB1J220J	CHIP R	22	J	1/16W	
R623			RK73EB2ER39K	CHIP R	0.39	K	1/4W	
R624			RK73HB1J104J	CHIP R	100K	J	1/16W	
R625			RK73HB1J680J	CHIP R	68	J	1/16W	
R626			R92-1252-05	CHIP R	0 OHM	J	1/16W	K,K4,73
R626			R92-1252-05	CHIP R	0 OHM	J	1/16W	M
R627			RK73HB1J223J	CHIP R	22K	J	1/16W	
R628			RK73HB1J183J	CHIP R	18K	J	1/16W	
R629			RK73EB2ER39K	CHIP R	0.39	K	1/4W	
R630,631			RK73HH1J154D	CHIP R	150K	D	1/16W	
R632,633			RK73HH1J334D	CHIP R	330K	D	1/16W	
R634			RK73HB1J103J	CHIP R	10K	J	1/16W	
R635			RK73HB1J473J	CHIP R	47K	J	1/16W	
R636			R92-1368-05	CHIP R	0 OHM			
R637			RK73HB1J223J	CHIP R	22K	J	1/16W	
R638			RK73HB1J474J	CHIP R	470K	J	1/16W	
R639			RK73HB1J184J	CHIP R	180K	J	1/16W	
R640			RK73HB1J474J	CHIP R	470K	J	1/16W	
R641			R92-1252-05	CHIP R	0 OHM	J	1/16W	
R642			RK73HB1J220J	CHIP R	22	J	1/16W	
R643			RK73HB1J683J	CHIP R	68K	J	1/16W	
R645,646			RK73GB1J271J	CHIP R	270	J	1/16W	
R647			R92-1252-05	CHIP R	0 OHM	J	1/16W	

Ref. No.	Address	New parts	Parts No.	Description				Destination
R648			R92-1368-05	CHIP R	0 OHM			K,K4,73
R648			R92-1368-05	CHIP R	0 OHM			M
R648			RK73HB1J5R6J	CHIP R	5.6	J	1/16W	K3,K6,M3
R701			RK73HB1J103J	CHIP R	10K	J	1/16W	
R702,703			RK73HB1J472J	CHIP R	4.7K	J	1/16W	
R704			RK73HB1J224J	CHIP R	220K	J	1/16W	
R705,706			RK73HB1J472J	CHIP R	4.7K	J	1/16W	
R707			RK73HB1J101J	CHIP R	100	J	1/16W	
R708			RK73HB1J103J	CHIP R	10K	J	1/16W	
R710			RK73HB1J102J	CHIP R	1.0K	J	1/16W	
R711			RK73HB1J474J	CHIP R	470K	J	1/16W	
R713			RK73HB1J334J	CHIP R	330K	J	1/16W	
R715,716			RK73HB1J332J	CHIP R	3.3K	J	1/16W	
R717			RK73HB1J272J	CHIP R	2.7K	J	1/16W	
R718			RK73HB1J100J	CHIP R	10	J	1/16W	
R719			RK73HB1J332J	CHIP R	3.3K	J	1/16W	
R721			RK73HB1J224J	CHIP R	220K	J	1/16W	
R722			RK73HB1J101J	CHIP R	100	J	1/16W	
R726			RK73HB1J474J	CHIP R	470K	J	1/16W	
R727			RK73HB1J681J	CHIP R	680	J	1/16W	
R728			RK73HB1J101J	CHIP R	100	J	1/16W	
R729			RK73HB1J470J	CHIP R	47	J	1/16W	
R730			RK73HB1J472J	CHIP R	4.7K	J	1/16W	
R731			RK73HB1J222J	CHIP R	2.2K	J	1/16W	
R732			RK73HB1J151J	CHIP R	150	J	1/16W	
R733			R92-1368-05	CHIP R	0 OHM			
R734			RK73HB1J104J	CHIP R	100K	J	1/16W	
R735			RK73HB1J563J	CHIP R	56K	J	1/16W	
R736			RK73HB1J104J	CHIP R	100K	J	1/16W	
R737			RK73HB1J563J	CHIP R	56K	J	1/16W	
R738			R92-1368-05	CHIP R	0 OHM			
R739-741			RK73HB1J105J	CHIP R	1.0M	J	1/16W	
R743			RK73HB1J101J	CHIP R	100	J	1/16W	K,K4,73
R743			RK73HB1J101J	CHIP R	100	J	1/16W	M
R743			RK73HB1J470J	CHIP R	47	J	1/16W	K3,K6,M3
R744			RK73HB1J221J	CHIP R	220	J	1/16W	
R747			RK73HB1J104J	CHIP R	100K	J	1/16W	
R750			RK73HB1J104J	CHIP R	100K	J	1/16W	
R751			RK73HB1J683J	CHIP R	68K	J	1/16W	
R753			R92-1368-05	CHIP R	0 OHM			
R754,755			RK73HB1J105J	CHIP R	1.0M	J	1/16W	
R756			R92-0670-05	CHIP R	0 OHM			
R757			RK73HB1J105J	CHIP R	1.0M	J	1/16W	
R758			R92-1368-05	CHIP R	0 OHM			
R759			R92-1252-05	CHIP R	0 OHM	J	1/16W	
R760			R92-1368-05	CHIP R	0 OHM			
R903			RK73HB1J102J	CHIP R	1.0K	J	1/16W	
R913-916			RK73HB1J102J	CHIP R	1.0K	J	1/16W	
R923			R92-1252-05	CHIP R	0 OHM	J	1/16W	
S1			S70-0424-05	TACT SWITCH				
S2			S70-0457-05	TACT SWITCH				
S3,4			S70-0424-05	TACT SWITCH				
D1			RB521S-30	DIODE				
D4			MA2S111	DIODE				
D14			MA2S111	DIODE				K,K4,K3
D14			MA2S111	DIODE				K6
D14-17			MA2S111	DIODE				73
D15-17			MA2S111	DIODE				M,M3
D16,17			MA2S111	DIODE				K,K4,K3

73 : TK-3173 K

PARTS LIST

TX-RX UNIT (X57-7010-XX)

Ref. No.	Address	New parts	Parts No.	Description	Desti-nation
D16,17			MA2S111	DIODE	K6
D24-27			MA2S111	DIODE	
D28-31			RB706F-40	DIODE	
D32			DA221	DIODE	
D33			AVRM1608270MAB	VARISTOR	
D501			MA2S077	DIODE	
D502,503			HSC277	DIODE	
D505			1SV325F	VARIABLE CAPACITANCE DIODE	
D507			1SV325F	VARIABLE CAPACITANCE DIODE	
D509			1SV325F	VARIABLE CAPACITANCE DIODE	
D511			1SV325F	VARIABLE CAPACITANCE DIODE	
D513			1SV278F	VARIABLE CAPACITANCE DIODE	
D514-516			HSC277	DIODE	
D517			MA2S077	DIODE	
D601			UDZS4.7B	ZENER DIODE	
D604-606			HVC131	DIODE	
D608			HVC131	DIODE	
D701,702			DAN235E	DIODE	
D703-707			HVC355B	VARIABLE CAPACITANCE DIODE	K,K4,73
D703-707			HVC355B	VARIABLE CAPACITANCE DIODE	M
D703-708			HVC350B	VARIABLE CAPACITANCE DIODE	K3,K6,M3
D708			HVC350B	VARIABLE CAPACITANCE DIODE	K,K4,73
D708			HVC350B	VARIABLE CAPACITANCE DIODE	M
D901			1SR154-400	DIODE	
IC1			XC61CC5002NR	MOS-IC	
IC2			XC6204B502PR	MOS-IC	
IC3			XC61CN3402NR	MOS-IC	
IC4,5			BU4094BCFV	MOS-IC	
IC6			LC75834W	MOS-IC	
IC7			30625MGP234HU	MICROPROCESSOR IC	
IC8			AT29C040A-90TU	ROM IC	
IC9			CAT24WC64JI	ROM IC	
IC10-12			TK62012F	MOS-IC	
IC13			AQUA-L	MOS-IC	
IC14			TC7W53FK(F)	MOS-IC	
IC15			TK62012F	MOS-IC	
IC16			M62364FP-F	MOS-IC	
IC17			TK62012F	MOS-IC	
IC18			TA7368F	MOS-IC	
IC19			TC75S51FE(F)	MOS-IC	
IC501			ADF4111BCP7	MOS-IC	
IC601			TA75W01FUF	MOS-IC	
IC701			TA31136FNG	MOS-IC	
Q1			UMG3N	TRANSISTOR	
Q4			FP210	TRANSISTOR	
Q5			UPA672T	FET	
Q6			UMG3N	TRANSISTOR	
Q7			UPA672T	FET	
Q8			DTA114EE	DIGITAL TRANSISTOR	
Q9			SSM6J08FU(F)	FET	
Q12			2SC4617(S)	TRANSISTOR	
Q13			2SB1132(Q,R)	TRANSISTOR	
Q14,15			SSM3K15TE(F)	FET	
Q16			2SA1774(S)	TRANSISTOR	
Q17			2SC4649(N,P)	TRANSISTOR	
Q19			SSM3K15TE(F)	FET	
Q21			RN4910(F)	TRANSISTOR	
Q22			SSM3K15TE(F)	FET	
Q23			DTC144EE	DIGITAL TRANSISTOR	
Q24			SSM6J08FU(F)	FET	

Ref. No.	Address	New parts	Parts No.	Description	Desti-nation
Q25			2SK1830F	FET	
Q26			2SJ347F	FET	
Q27			DTC144EE	DIGITAL TRANSISTOR	
Q28			SSM3K01T(F)	FET	
Q29			SSM3K15TE(F)	FET	
Q30			2SJ243	FET	
Q31,32			2SC4649(N,P)	TRANSISTOR	
Q33			2SJ347F	FET	
Q34			SSM3K15TE(F)	FET	
Q35			SSM3K01T(F)	FET	
Q501			2SC5488	TRANSISTOR	
Q502,503			2SK508NV(K52)	FET	
Q504			SSM6P05FU(F)	FET	
Q505			2SC4617(S)	TRANSISTOR	
Q506,507			2SC5488	TRANSISTOR	
Q601			2SC5488	TRANSISTOR	
Q602			2SK3077F	FET	
Q603			RD01MUS1	FET	
Q604			2SK3476	FET	
Q605			DTC114EE	DIGITAL TRANSISTOR	
Q606			2SK879(GR)	FET	
Q607			DTC114EE	DIGITAL TRANSISTOR	
Q608			DTA144EE	DIGITAL TRANSISTOR	
Q609			SSM3K15TE(F)	FET	
Q701			2SC4649(N,P)	TRANSISTOR	
Q702			DTA144EE	DIGITAL TRANSISTOR	
Q703			2SC4649(N,P)	TRANSISTOR	
Q704,705			3SK318	FET	
TH501			B57331V2104J	THERMISTOR	
TH701,702			B57331V2104J	THERMISTOR	

EXPLODED VIEW

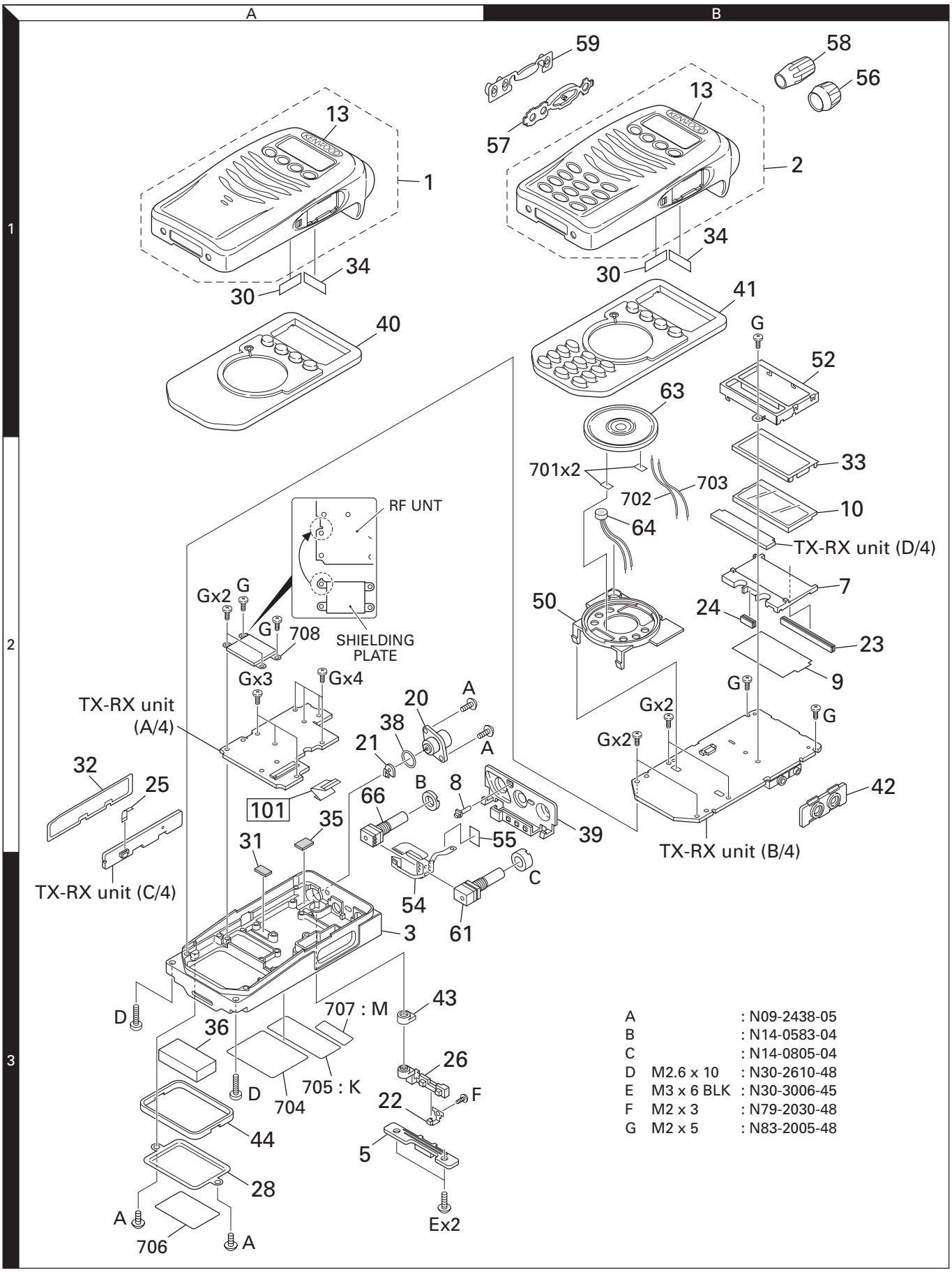

Parts with the exploded numbers larger than 700 are not supplied.

PACKING

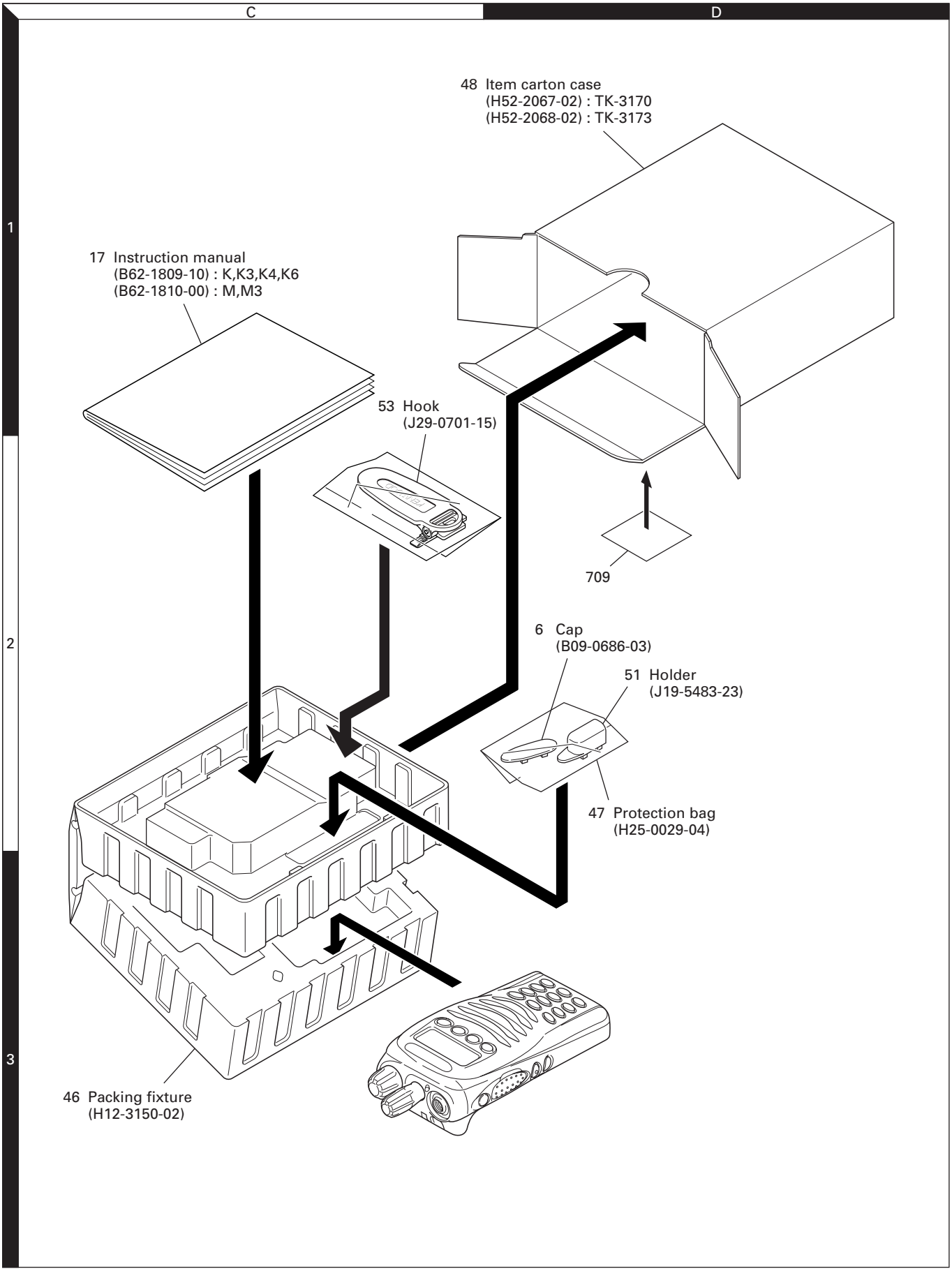

Parts with the exploded numbers larger than 700 are not supplied.

ADJUSTMENT

Controls

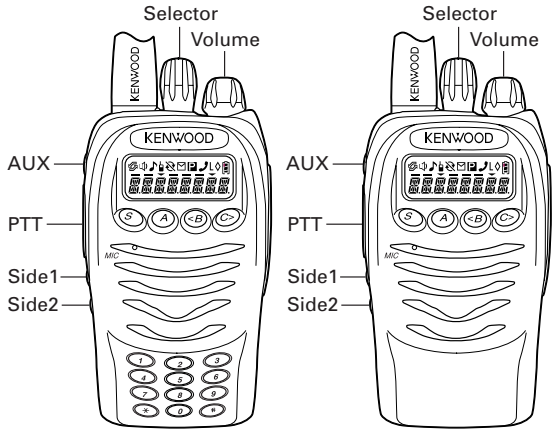

Panel Test Mode

■ Test mode operation features

This transceiver has a test mode. ***To enter test mode, press [A] key and turn power on. Hold [A] key until frequency version appears on LCD.*** Test mode can be inhibited by programming. To exit test mode, switch the power on again. The following functions are available in test mode.

■ Key operation

Key	Function	Display
[S]	Shifts to Panel tuning mode	-
[A]	Low transmit power	"L" appears
[B]	MSK 1200bps and 2400bps	2400bps : ✉ icon appears
[C]	Test signaling CH up	Signaling No.
[Selector]	Test frequency CH up/down	Channel No.
[Side1]	Squelch on/off	🔈
[Side2]	Narrow/Wide	Narrow : "N", Wide : "W"
[PTT]	Transmit	-
[0] to [9] and [#],[*] (16 key model only)	Use as the DTMF keypad. If a key is pressed during transmission, the DTMF corresponding to the key that was presses is sent.	-
[AUX]	Segment check	All segment appears

Note :

- If a [S], [A], [B], [C] key is pressed during transmission, the DTMF corresponding to the key that was pressed is sent.

• LED indicator

Red LED — Lights during transmission. Blinks at the low battery voltage warning.

Green LED — Lights when there is carrier.

• LCD display in panel test mode

N _ _ _ 1 – _ 1

N : Narrow
W : Wide
Channel No.
Signaling No.

■ Frequency and Signaling

The set has been adjusted for the frequencies shown in the following table. When required, readjust them following the adjustment procedure to obtain the frequencies you want in actual operation.

• Test frequency

CH	K,K4		K3,K6,M3		M	
	RX (MHz)	TX (MHz)	RX (MHz)	TX (MHz)	RX (MHz)	TX (MHz)
1	465.05000	465.10000	415.05000	415.10000	465.05000	465.10000
2	440.05000	440.10000	400.05000	400.10000	440.05000	440.10000
3	489.95000	489.90000	429.95000	429.90000	489.95000	489.90000
4	465.00000	465.00000	415.00000	415.00000	465.00000	465.00000
5	465.20000	465.20000	415.20000	415.20000	465.20000	465.20000
6	465.40000	465.40000	415.40000	415.40000	465.40000	465.40000
7~16	-	-	-	-	-	-

• Test signaling

No.	RX	TX
1	None	None
2	None	100Hz Square Wave
3*	LTR Data : AREA=0, GOTO=12 HOME=12 ID=47, FREE=25	LTR Data : AREA=0, GOTO=12 HOME=12 ID=47, FREE=25
4	QT : 67.0Hz	QT : 67.0Hz
5	QT : 151.4Hz	QT : 151.4Hz
6	QT : 210.7Hz	QT : 210.7Hz
7	QT : 254.1Hz	QT : 254.1Hz
8	DQT : 023N	DQT : 023N
9	DQT : 754I	DQT : 754I
10	DTMF : 159D	DTMF : 159D
11	None	DTMF Code 9
12	2-tone : A : 304.7Hz B : 3106.0Hz	2-tone : A : 304.7Hz B : 3106.0Hz
13	Single Tone : 979.9Hz	Single Tone : 979.9Hz
14	None	Single Tone : 1000Hz
15	Skip	Skip
16	None	MSK
17	MSK : Preamble : 0xAAAA Sync : 0x23EB Data : 0x230960C6AAAA CRC : 0xC4D7	MSK : Preamble : 0xAAAA Sync : 0x23EB Data : 0x230960C6AAAA CRC : 0xC4D7

* : LTR signaling apply TK-3173 and TK-3170 (M,M3) only.

ADJUSTMENT

Panel Tuning Mode

■ Preparations for tuning the transceiver

Before attempting to tune the transceiver, connect the unit to a suitable power supply.

Whenever the transmitter is turned, the unit must be connected to a suitable dummy load (i.e. power meter).

The speaker output connector must be terminated with a 8Ω dummy load and connected to an AC voltmeter and an audio distortion meter or a SINAD measurement meter at all times during tuning.

■ Transceiver tuning
(To place transceiver in tuning mode)

Press [S] key, now in tuning mode. Use [B] key to write tuning data through tuning modes, and [Selector] to adjust tuning requirements (1 to 256 appeares on LCD).

Use [C] key to select the adjustment item through tuning modes. Use [A] key to adjust 3 or 5 reference level adjustments, and use [Side2] key to switch between Wide/Narrow.

Channel appears on LCD. Set channel according to tuning requirements.

• LCD display in panel tuning mode

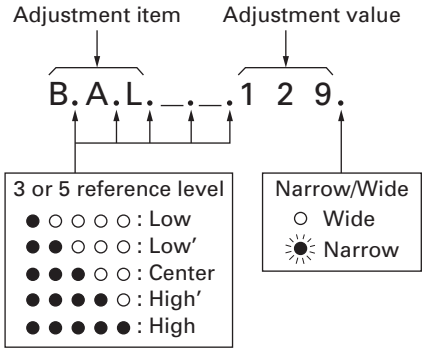

■ Key operation

Key	Function	
	Push	Hold (1 second)
[S]	End of panel tuning mode	-
[A]	To enter 3 or 5 reference level adjustments	-
[B]	Writes the adjustment value	-
[C]	Go to next adjustment item	Back to last adjustment item
[Selector]	Adjustment value up/down	
[Volume]	Volume level up/down	
[Side1]	Squelch on/off	-
[Side2]	Selects Narrow, Wide	-
[AUX]	All segment appears	-

■ 3 or 5 reference level adjustments frequency

Tuning point	K,K4		K3,K6,M3		M	
	RX (MHz)	TX (MHz)	RX (MHz)	TX (MHz)	RX (MHz)	TX (MHz)
Low	440.05000	440.10000	400.05000	400.10000	440.05000	440.10000
Low'	452.55000	452.60000	407.55000	407.60000	452.55000	452.60000
Center	465.05000	465.10000	415.05000	415.10000	465.05000	465.10000
High'	477.55000	477.60000	422.55000	422.60000	477.55000	477.60000
High	489.95000	489.90000	429.95000	429.90000	489.95000	489.90000

■ Adjustment item and Display
(✳✳✳ : 1~256, MSK only : 1~64)

Order	Adjustment item	Display
1	Frequency	F R E Q_✳✳✳
2	High power	HPWR_✳✳✳
3	Low power	LPWR_✳✳✳
4	DQT balance	B A L _ _ ✳✳✳
5	Max deviation	D E V _ _ ✳✳✳
6	VOX 1	V X 1 _ _ ✳✳✳
7	VOX 10	V X 1 0 _ ✳✳✳
8	QT deviation	Q T _ _ _ ✳✳✳
9	DQT deviation	D Q T _ _ ✳✳✳
10	LTR deviation	L T R _ _ ✳✳✳
11	DTMF deviation	D T M F_✳✳✳
12	MSK deviation	M S K _ _ _ ✳✳
13	Tone deviation	T O N E_✳✳✳
14	Sensitivity	S E N S _✳✳✳
15	Squelch	S Q L _ _ ✳✳✳
16	Low RSSI	L R S S I ✳✳✳
17	Squelch tight	S Q L T_✳✳✳
18	High RSSI	H R S S I ✳✳✳
19	Battery detection	B A T T _✳✳✳

ADJUSTMENT

■ Flow chart

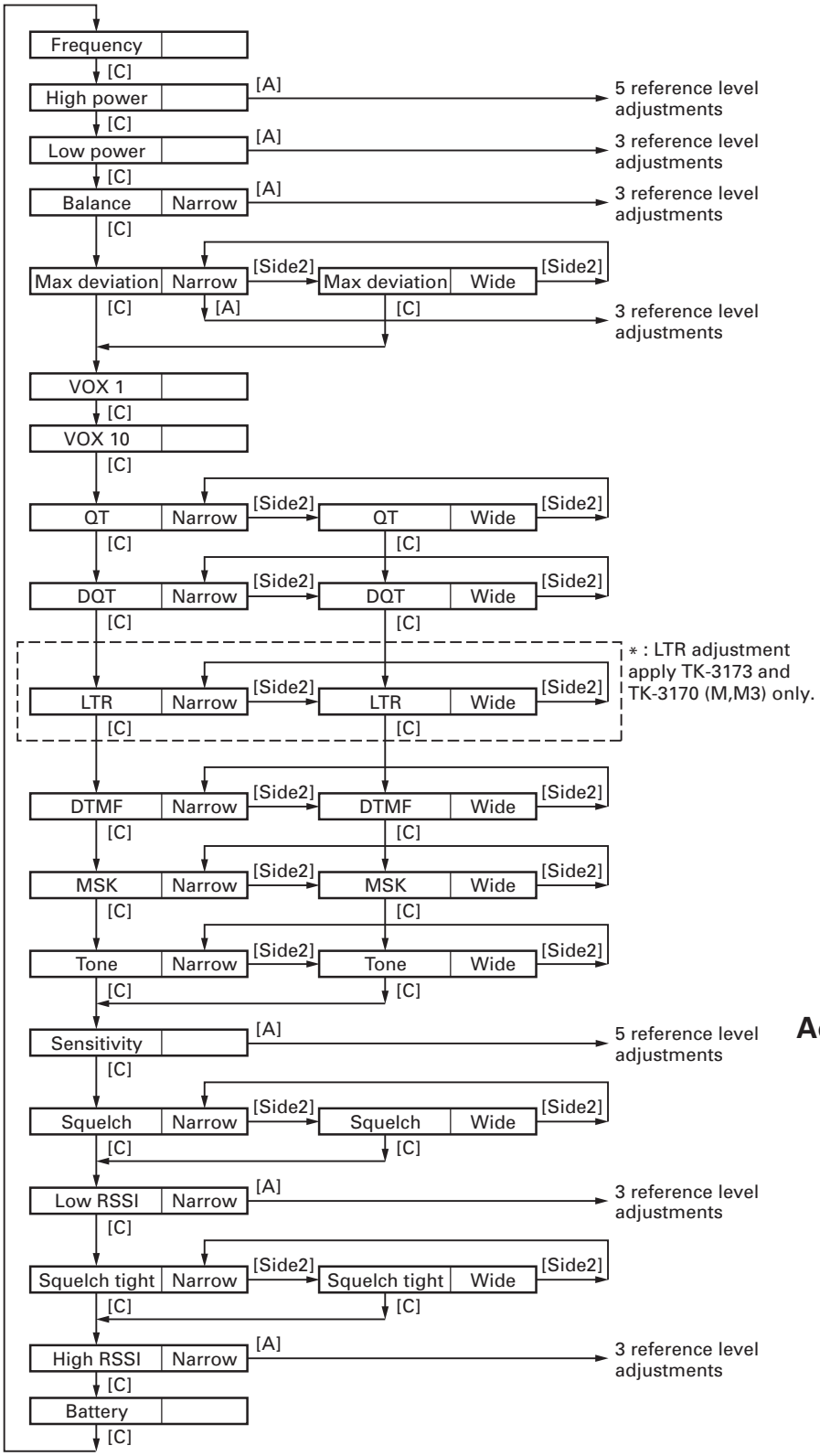

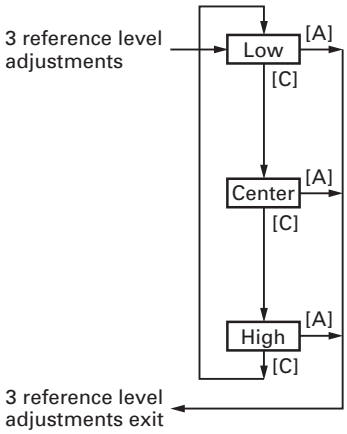

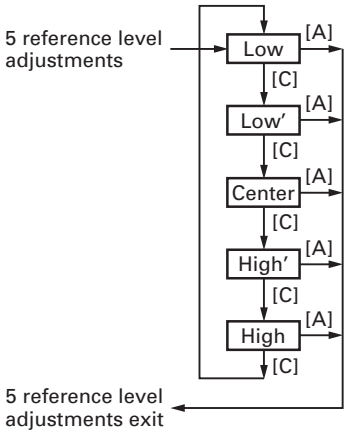

Adjustment Points

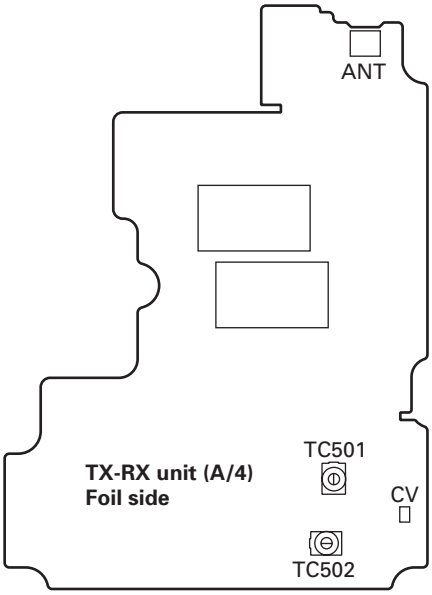

ADJUSTMENT

Test Equipment Required for Alignment

Test Equipment	Major Specifications	
1. Standard Signal Generator (SSG)	Frequency Range	400 to 520MHz
	Modulation	Frequency modulation and external modulation
	Output	–127dBm/0.1μV to greater than –47dBm/1mV
2. Power Meter	Input Impedance	50Ω
	Operation Frequency	400 to 520MHz or more
	Measurement Capability	Vicinity of 10W
3. Deviation Meter	Frequency Range	400 to 520MHz
4. Digital Volt Meter (DVM)	Measuring Range	10mV to 10V DC
	Input Impedance	High input impedance for minimum circuit loading
5. Oscilloscope		DC through 30MHz
6. High Sensitivity Frequency Counter	Frequency Range	10Hz to 1000MHz
	Frequency Stability	0.2ppm or less
7. Ammeter		5A
8. AF Volt Meter (AF VTVM)	Frequency Range	50Hz to 10kHz
	Voltage Range	1mV to 10V
9. Audio Generator (AG)	Frequency Range	50Hz to 5kHz or more
	Output	0 to 1V
10. Distortion Meter	Capability	3% or less at 1kHz
	Input Level	50mV to 10Vrms
11. 8Ω Dummy Load		Approx. 8Ω, 3W
12. Regulated Power Supply		5V to 10V, approx. 5A
		Useful if ammeter equipped

■ Antenna Connector Adapter

The antenna connector of this radio uses an SMA terminal. Use an antenna connector adapter [SMA(f) – BNC(f) or SMA(f) – N(f)] for adjustment. (The adapter is not provided as an option, so buy a commercially-available one.)

■ Battery Jig (W05-0909-00)

Connect the power cable properly between the battery jig installed in the transceiver and the power supply, and be sure output voltage and the power supply polarity prior to switching the power supply ON, otherwise over voltage and reverse connection may damage the transceiver, or the power supply or both.

When using the battery jig in user mode, the transceiver assumes that a lithium-ion battery pack is attached to the transceiver. In adjustment mode, battery type detection is not performed. Refer to page 26 for details.

Note : When using the battery jig, you must measure the voltage at the terminals of the battery jig. Otherwise, a slight voltage drop may occur within the power cable, between the power supply and the battery jig, especially while the transceiver transmits.

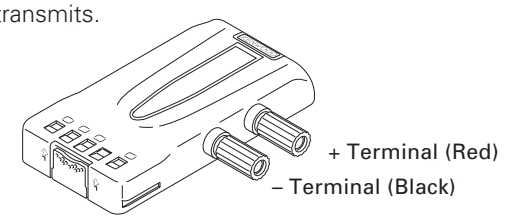

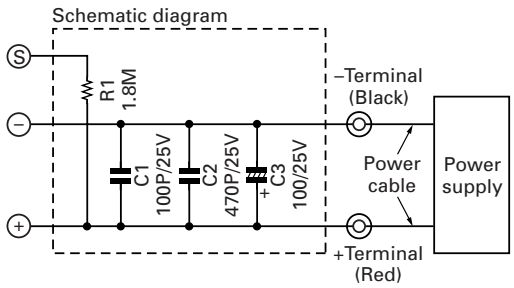

■ Nut wrench

In order to turn the volume nut and the channel selector nut, use a recommendation tool.

KENWOOD part No. : W05-1123-00

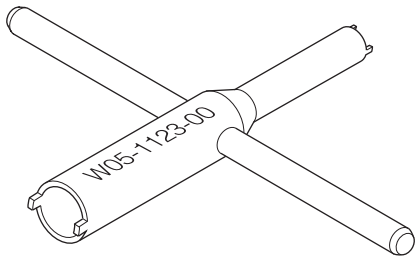

ADJUSTMENT

Common Section

Item	Condition	Measurement			Adjustment			Specifications/Remarks
		Test-equipment	Unit	Terminal	Unit	Parts	Method	
1. Setting	1) BATT terminal voltage : 7.5V 2) SSG standard modulation [Wide] MOD : 1kHz, DEV : 3kHz [Narrow] MOD : 1kHz, DEV : 1.5kHz							
2. VCO lock voltage • RX	**[Panel test mode]** 1) CH-Sig : 3-1	Power meter DVM	Panel TX-RX (A/4)	ANT CV	TX-RX (A/4)	TC502	3.6V **K,K4,M,3173** 3.4V **K3,K6,M3**	±0.1V
	2) CH-Sig : 2-1						Check	0.6V or more
• TX	**[Panel tuning mode] LPWR*** 3) CH-Sig : 3-1 PTT : ON				TX-RX (A/4)	TC501	3.6V **K,K4,M,3173** 3.4V **K3,K6,M3**	±0.1V
	4) CH-Sig : 2-1 PTT : ON						Check	0.6V or more

* TX can be continued on unlock condition in panel tuning mode.

Transmitter Section

Item	Condition	Measurement			Adjustment			Specifications/Remarks
		Test-equipment	Unit	Terminal	Unit	Parts	Method	
1. Frequency adjust	1) Adj item : [FREQ_] Adjust : [∗∗∗] CH-Sig : 3-1 PTT : ON	f. counter	Panel	ANT	Panel	Selector knob	High frequency ±50Hz	Note : After replacing the TCXO (X501) align frequency.
2. High power adjust	1) Adj item : [HPWR_] Adjust : [∗∗∗] 2) Adj item : [H.PWR_] → [H.P.WR_] → [H.P.W.R_] → [H.P.W.R._] → [H.P.W.R._.] Adjust : [∗∗∗] PTT : ON	Power meter Ammeter					4.0W	±0.1W 1.8A or less
3. High power check	**[Panel test mode]** 1) CH-Sig : 1-1 PTT : ON						Check	4.5~5.5W 1.9A or less
	2) CH-Sig : 2-1 PTT : ON							
	3) CH-Sig : 3-1 PTT : ON							
4. Low power adjust	1) Adj item : [LPWR_] Adjust : [∗∗∗] 2) Adj item : [L.PWR_] → [L.P.W.R_] → [L.P.W.R._.] Adjust : [∗∗∗] PTT : ON				Panel	Selector knob	1.0W	±0.1W 0.9A or less
5. Low power check	**[Panel test mode]** 1) CH-Sig : 1-1 Set low power (Push [S]) PTT : ON	Power meter Ammeter	Panel	ANT			Check	0.7~1.4W 1.0A or less
	2) CH-Sig : 2-1 PTT : ON							
	3) CH-Sig : 3-1 PTT : ON							

ADJUSTMENT

Item	Condition	Measurement			Adjustment			Specifications/Remarks
		Test-equipment	Unit	Terminal	Unit	Parts	Method	
6. DQT balance adjust • Narrow	1) Adj item : [BAL_ _] Adjust : [✳✳✳.] Deviation meter filter LPF : 3kHz HPF : OFF 2) Adj item : [B.AL_ _] → [B.A.L._ _] → [B.A.L._. _.] Adjust : [✳✳✳.] PTT : ON	Deviation meter Oscilloscope AG AF VTVM	Panel	ANT SP/MIC	Panel	Selector knob	Make the demodulation waves into square waves.	These 2 peaks to the same level 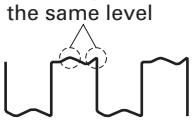
7. Max DEV adjust • Narrow	1) Adj item : [DEV_ _] Adjust : [✳✳✳.] AG : 1kHz/75mV at MIC terminal Deviation meter filter LPF : 15kHz HPF : OFF 2) Adj item : [D.EV_ _] → [D.E.V._ _] → [D.E.V._. _.] Adjust : [✳✳✳.] PTT : ON						2.20kHz (According to the larger +, –)	±50Hz
• Wide	3) Adj item : [DEV_ _] Adjust : [✳✳✳] PTT : ON						4.40kHz (According to the larger +, –)	±50Hz
8. MIC sensitivity check	**[Panel test mode]** 1) CH-Sig : 1-1 AG : 1kHz/15.0mV at MIC terminal PTT : ON						Check	1.3~1.8kHz (Narrow) 2.5~3.5kHz (Wide)
9. VOX1 adjust	1) Adj item : [VOX1_] Adjust : [✳✳✳] AG : 1kHz/150mV at MIC terminal	AG	Panel	SP/MIC	Panel		After apply signal from AG, press [B] key that numeric will be stored in memory.	
10. VOX10 adjust	1) Adj item : [VOX10] Adjust : [✳✳✳] AG : 1kHz/2mV at MIC terminal							
11. QT deviation adjust • Narrow	1) Remove the panel tuning cable assembly from the universal connector. Adj item : [QT_ _ _] Adjust : [✳✳✳.] Deviation meter filter LPF : 3kHz HPF : OFF PTT : ON	Power meter Deviation meter Oscilloscope AG AF VTVM	Panel	ANT SP/MIC	Panel	Selector knob	0.35kHz	±40Hz
• Wide	2) Adj item : [QT_ _ _] Adjust : [✳✳✳] PTT : ON						0.75kHz	±40Hz
12. DQT deviation adjust • Narrow	1) Adj item : [DQT_ _] Adjust : [✳✳✳.] Deviation meter filter LPF : 3kHz HPF : OFF PTT : ON						0.35kHz	±40Hz
• Wide	2) Adj item : [DQT_ _] Adjust : [✳✳✳] PTT : ON						0.75kHz	±40Hz

ADJUSTMENT

Item	Condition	Measurement			Adjustment			Specifications/Remarks
		Test-equipment	Unit	Terminal	Unit	Parts	Method	
13. LTR deviation adjust • Narrow	1) Adj item : [LTR_ _] Adjust : [∗∗∗.] Deviation meter filter LPF : 3kHz HPF : OFF PTT : ON	Power meter Deviation meter Oscilloscope AG AF VTVM	Panel	ANT SP/MIC	Panel	Selector knob	0.75kHz	±0.04kHz
• Wide	2) Adj item : [LTR_ _] Adjust : [∗∗∗] PTT : ON						1.00kHz	±0.04kHz
LTR adjustment apply TK-3173 and TK-3170 (M,M3) only.								
14. DTMF deviation adjust • Narrow	1) Adj item : [DTMF_] Adjust : [∗∗∗.] Deviation meter filter LPF : 15kHz HPF : OFF PTT : ON						1.25kHz	±0.1kHz
• Wide	2) Adj item : [DTMF_] Adjust : [∗∗∗] PTT : ON						2.5kHz	±0.1kHz
15. MSK deviation adjust • Narrow	1) Adj item : [MSK_ _ _] Adjust : [∗∗.] Deviation meter filter LPF : 15kHz HPF : OFF PTT : ON						1.5kHz	±0.1kHz
• Wide	2) Adj item : [MSK_ _ _] Adjust : [∗∗] PTT : ON						3.0kHz	±0.1kHz
16. TONE deviation adjust • Narrow	1) Adj item : [TONE_] Adjust : [∗∗∗.] Deviation meter filter LPF : 15kHz HPF : OFF PTT : ON						1.5kHz	±0.1kHz
• Wide	2) Adj item : [TONE_] Adjust : [∗∗∗] PTT : ON						3.0kHz	±0.1kHz
17. BATT detection writing	1) Adj item : [BATT_] Adjust : [∗∗∗] PTT : ON	Power meter DVM	Panel	ANT BATT terminal	Panel		After pressing the PTT switch, confirm that one predetermined numeric in the range 1 to 256 appears and then press [B] key. That numeric will be stored in memory.	BATT terminal voltage : 5.9V
18. BATT detection check	**[Panel test mode]** 1) CH-Sig : 1-1 BATT terminal voltage : 7.5V PTT : ON						Check	The transceiver can transmit without causing the LED to blink.
	2) BATT terminal voltage : 5.7V PTT : ON							The transceiver should not transmit and LED blinking.

ADJUSTMENT

Receiver Section

Item	Condition	Measurement			Adjustment			Specifications/Remarks
		Test-equipment	Unit	Terminal	Unit	Parts	Method	
1. Sensitivity adjust	1) Adj item : [SENS_] Adjust : [✳✳✳] 2) Adj item : [S.ENS_] → [S.E.NS_] → [S.E.N.S_] → [S.E.N.S._] → [S.E.N.S._.] Adjust : [✳✳✳] SSG output : –103dBm (1.58µV) (MOD : 1kHz/±1.5kHz)	SSG AF VTVM Oscilloscope	Panel	ANT SP/MIC	Panel	Selector knob	Adjust for RSSI MAX	Rotate the selector knob and increase the adjustment value starting from "1" to obtain RSSI MAX.
2. Sensitivity check	**[Panel test mode]** 1) CH-Sig : 1-1 SSG output Wide : –117dBm (0.32µV) (MOD : 1kHz/±3kHz) Narrow : –116dBm (0.35µV) (MOD : 1kHz/±1.5kHz)						Check	13dB SINAD or more
3. Squelch (Preset) adjust • Narrow	1) Adj item : [SQL_ _] Adjust : [✳✳✳.] SSG output : –120dBm (0.22µV) (MOD : 1kHz/±1.5kHz)				Panel	Selector knob	After input signal from SSG, press [B] key. That numeric will be stored in memory.	After adjusting SQL, check SQL open/close. SSG –118dBm : Open SSG OFF : Close
• Wide	2) Adj item : [SQL_ _] Adjust : [✳✳✳] SSG output : –120dBm (0.22µV) (MOD : 1kHz/±3.0kHz)							
4. Low RSSI adjust • Narrow	1) Adj item : [LRSSI] Adjust : [✳✳✳.] SSG output : –118dBm (0.28µV) (MOD : 1kHz/±1.5kHz)						After input signal from SSG, press [B] key. That numeric will be stored in memory.	
	2) Adj item : [L.RSSI] → [L.R.S.SI] → [L.R.S.S.I.] Adjust : [✳✳✳.]							
5. Squelch (Tight) adjust • Narrow	1) Adj item : [SQLT_] Adjust : [✳✳✳.] SSG output : –115dBm (0.4µV) (MOD : 1kHz/±1.5kHz)						After input signal from SSG, press [B] key. That numeric will be stored in memory.	After adjusting SQL, check SQL open/close. SSG –113dBm : Open SSG OFF : Close
• Wide	2) Adj item : [SQLT_] Adjust : [✳✳✳] SSG output : –116dBm (0.35µV) (MOD : 1kHz/±3.0kHz)							
6. High RSSI adjust • Narrow	1) Adj item : [HRSSI] Adjust : [✳✳✳.] SSG output : –70dBm (70.8µV) (MOD : 1kHz/±1.5kHz)						After input signal from SSG, press [B] key. That numeric will be stored in memory.	
	2) Adj item : [H.RSSI] → [H.R.S.SI] → [H.R.S.S.I.] Adjust : [✳✳✳.]							

TERMINAL FUNCTION

■ CN60

Pin No.	Pin Name	I/O	Function
1	GND	-	GND
2	SSB	O	Switched B output DC (Battery terminal)±0.5V, 150mA max
3	AUX1	I/O	Auxiliary 1 Input: L ≤ 0.45V, H ≥ 4.7V/25kΩ load Output: L ≤ 0.4V, H ≥ 4.2V/100kΩ load
4	AUX2	O	Auxiliary 2 Output: L ≤ 0.4V, H ≥ 4.2V/100kΩ load
5	RXD2	I	RXD Input: L ≤ 0.4V, H ≥ 4.2V/100kΩ load
6	AUX3	I/O	Auxiliary 3 Input: Active "L", L ≤ 1.0V, H ≥ 4.0V Output: L ≤ 0.4V, H ≥ 4.2V/100kΩ load
7	AUX4	O	Auxiliary 4 Output: L ≤ 0.4V, H ≥ 4.2V/100kΩ load
8	AUX5	O	Auxiliary 5 Output: L ≤ 0.4V, H ≥ 4.2V/100kΩ load
9	TXD2	O	TXD Output: L ≤ 0.4V, H ≥ 4.2V/100kΩ load
10	TA1	I	Transmit audio 1 Input: Zin > 22kΩ, 350±50mVp-p (Standard modulation)
11	5C	-	5V power supply (50mA max)
12	MIC O	O	TX input Input: ZL ≥ 2.2kΩ, 130±50mVp-p (Standard modulation)
13	TA2	I	Transmit audio 2 Input: Zin > 22kΩ, 350±50mVp-p (Standard modulation)
14	DEO	O	Discriminator audio, 1Vp-p
15	ALT2	I	Alert tone audio 2, 0.5Vp-p
16	ALT1	I	Alert tone audio 1, 0.5Vp-p
17	MIC I	I	MIC signal input (AC coupled) Before pre-emphasis Zin ≥ 22kΩ, 130±50mVp-p (Standard modulation)
18	RA O	O	Audio signal output (DC coupled) After de-emphasis ZL ≥ 30kΩ, 1±0.3Vp-p (Standard modulation)
19	RA I	I	Audio signal input (DC coupled) After de-emphasis Zin ≥ 15kΩ, 1±0.3Vp-p (Standard modulation)
20	AUX6	I/O	Auxiliary 6 Input: L ≤ 0.8V, H ≥ 4.2V Output: L ≤ 0.4V, H ≥ 4.2V/100kΩ load

■ Solder Point Connection

Designation	Function	Condiition / Value
MIC_I	MIC input	Input sensitivity / impedance (1kHz std. dev.) 500mVrms±100mV, @22kΩ load
MIC_O	MIC output	Output voltage / impedance (1kHz, 15mVrms MIC input) 60mVrms±20mV, @2.2kΩ load
RA_I	Receiver AF input	Input sensitivity / impedance (1kHz rated AF power / Vol. max) 150mV±50mV, @22kΩ load
RA_O	Receiver AF output	Output voltage / impedance (1kHz std. mod.) 200mV±50mV, @2.2kΩ load
SP_M	Speaker mute	Load >100kΩ (Low) Vss~0.4V, (High) Vdd–0.8V~Vdd
RXD	RXD	Load >100kΩ (Low) Vss~0.4V, (High) Vdd–0.8V~Vdd
TXD	TXD	Load >100kΩ (Low) Vss~0.4V, (High) Vdd–0.8V~Vdd
RSSI	RSSI output	Load >100kΩ (Low) Vss~0.4V, (High) Vdd–0.8V~Vdd
LSDFO	LSDIN output	Load >100kΩ (Low) Vss~0.4V, (High) Vdd–0.8V~Vdd
MDSW	Mandown SW input	Load >100kΩ (Low) Vss~0.4V, (High) Vdd–0.8V~Vdd
5C	DC 5V	Output voltage / 10mA load 5.0V±0.5V / 50mA max
DEO	Discriminator signal output	Output voltage / impedance (1kHz std. mod.) 400mVrms±100mV, @2.2kΩ load
ALT	Sidetone input	Input sensitivity / impedance (1kHz rated AF power / Vol. max) 140mVrms±50mV, @22kΩ load
DATAO	Transmit AF input	Input sensitivity / impedance (1kHz std. dev.) 310Vrms±50mV, @22kΩ load
A1	AUX1	Load >100kΩ (Low) Vss~0.4V, (High) Vdd–0.8V~Vdd
A2	AUX2	Load >100kΩ (Low) Vss~0.4V, (High) Vdd–0.8V~Vdd
A3	AUX3	Load >100kΩ (Low) Vss~0.4V, (High) Vdd–0.8V~Vdd
A4	AUX4	Load >100kΩ (Low) Vss~0.4V, (High) Vdd–0.8V~Vdd
A5	AUX5	Load >100kΩ (Low) Vss~0.4V, (High) Vdd–0.8V~Vdd
A6	AUX6	Load >100kΩ (Low) Vss~0.4V, (High) Vdd–0.8V~Vdd
SB	Switched B	Output voltage / 7mA load DC (Battery terminal) ±0.5V / 150mA max
G	GND	Vss
TA1	Transmit AF input	Input sensitivity / impedance (1kHz std. dev.) 310Vrms±50mV, @22kΩ load

TK-3170/3173 PC BOARD

TX-RX UNIT (X57-7010-XX) (A/4) Component side view (J72-0964-19 A/4)
-10 : TK-3170 K -11 : TK-3170 K4 -12 : TK-3170 K3 -13 : TK-3170 K6
-14 : TK-3173 K -21 : TK-3170 M -22 : TK-3170 M3

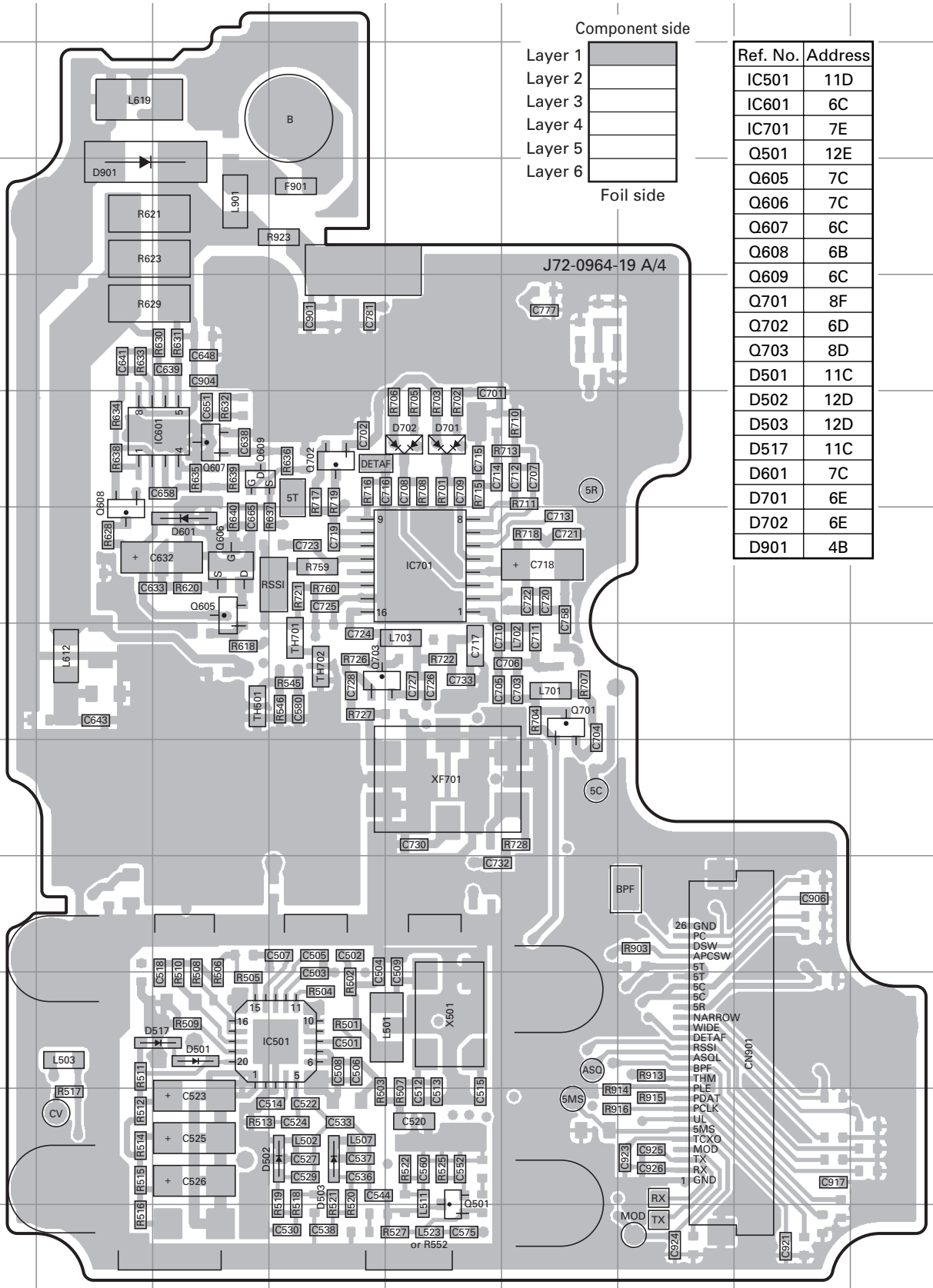

Ref. No.	Address
IC501	11D
IC601	6C
IC701	7E
Q501	12E
Q605	7C
Q606	7C
Q607	6C
Q608	6B
Q609	6C
Q701	8F
Q702	6D
Q703	8D
D501	11C
D502	12D
D503	12D
D517	11C
D601	7C
D701	6E
D702	6E
D901	4B

PC BOARD TK-3170/3173

TX-RX UNIT (X57-7010-XX) (A/4) Foil side view (J72-0964-19 A/4)
-10 : TK-3170 K -11 : TK-3170 K4 -12 : TK-3170 K3 -13 : TK-3170 K6
-14 : TK-3173 K -21 : TK-3170 M -22 : TK-3170 M3

Ref. No.	Address	Ref. No.	Address
Q502	11G	D511	13I
Q503	13G	D513	12G
Q504	11F	D514	11F
Q505	11F	D515	12C
Q506	12F	D516	12D
Q507	12D	D604	6I
Q601	11C	D605	6I
Q602	10D	D606	5H
Q603	10G	D608	5G
Q604	9H	D703	8E
Q704	10D	D704	8E
Q705	6E	D705	7E
D505	11I	D706	5E
D507	11I	D707	5F
D509	12I	D708	5G

Component side
Layer 1
Layer 2
Layer 3
Layer 4
Layer 5
Layer 6
Foil side

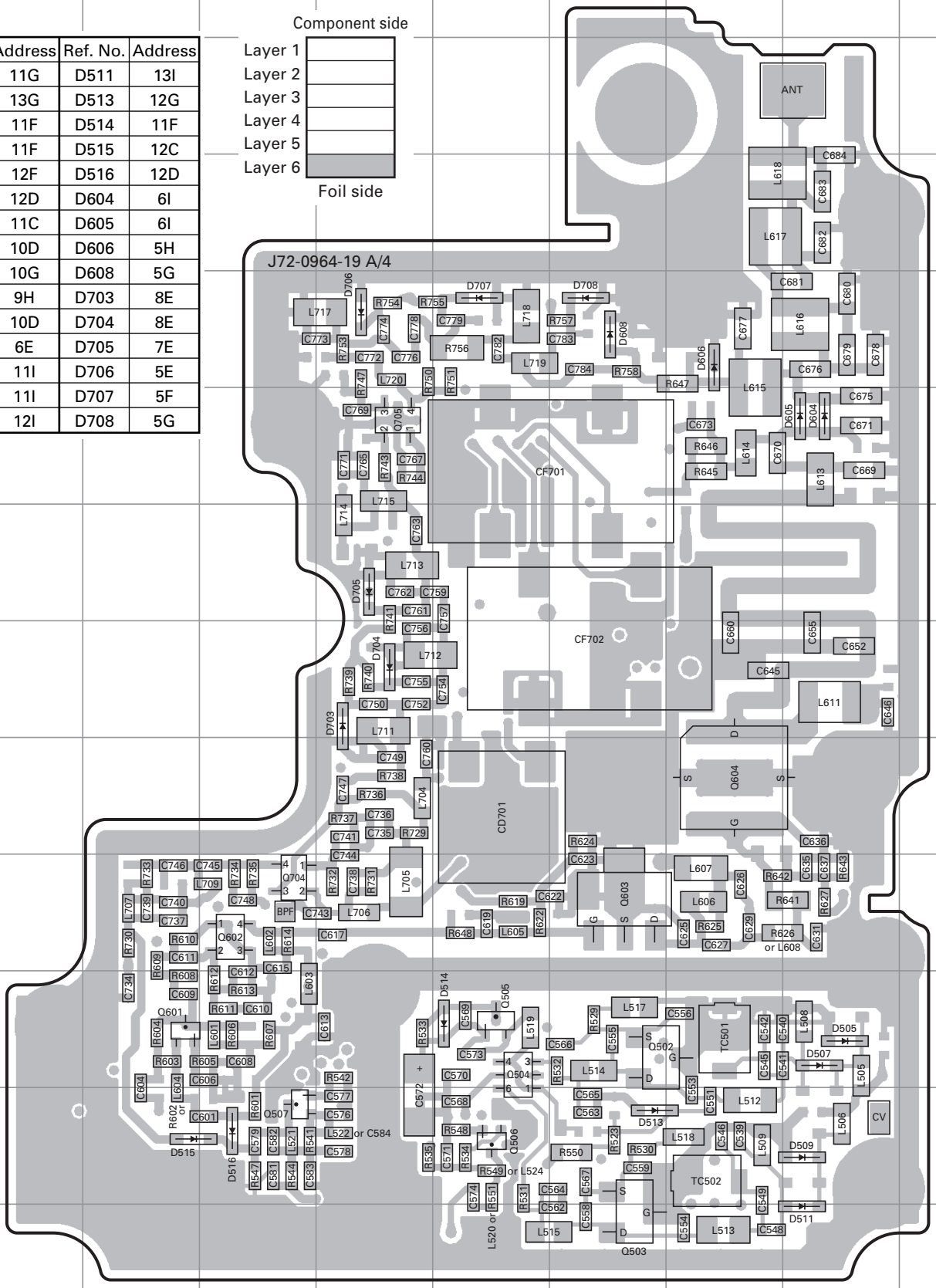

TK-3170/3173 PC BOARD

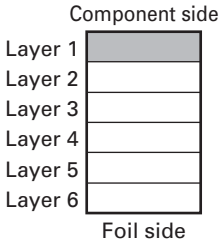

Ref. No.	Address	Ref. No.	Address	Ref. No.	Address	Ref. No.	Address	Ref. No.	Address
IC4	6M	IC17	12K	Q23	8N	Q32	10G	D12	8D
IC5	6J	IC18	8M	Q24	7M	Q33	7J	D13	10D
IC11	8K	IC19	12G	Q25	12K	Q35	9M	D29	11H
IC12	7J	Q12	7I	Q26	12K	D4	7I	D30	10K
IC13	9J	Q13	6I	Q27	9M	D5	8N	D31	10J
IC14	9K	Q19	10H	Q28	9N	D7	10N	D32	10I
IC15	7H	Q21	10K	Q30	11J	D8	8F	D33	12N
IC16	12I	Q22	11I	Q31	8G	D9	10F		

TX-RX UNIT (X57-7010-XX) (B/4) Component side view (J72-0964-19 B/4)
-10 : TK-3170 K -11 : TK-3170 K4 -12 : TK-3170 K3 -13 : TK-3170 K6
-14 : TK-3173 K -21 : TK-3170 M -22 : TK-3170 M3

(D/4)

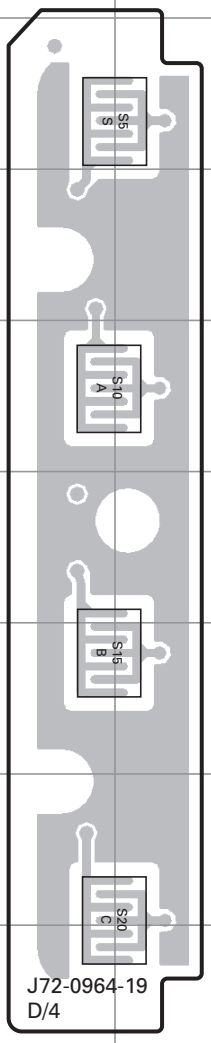

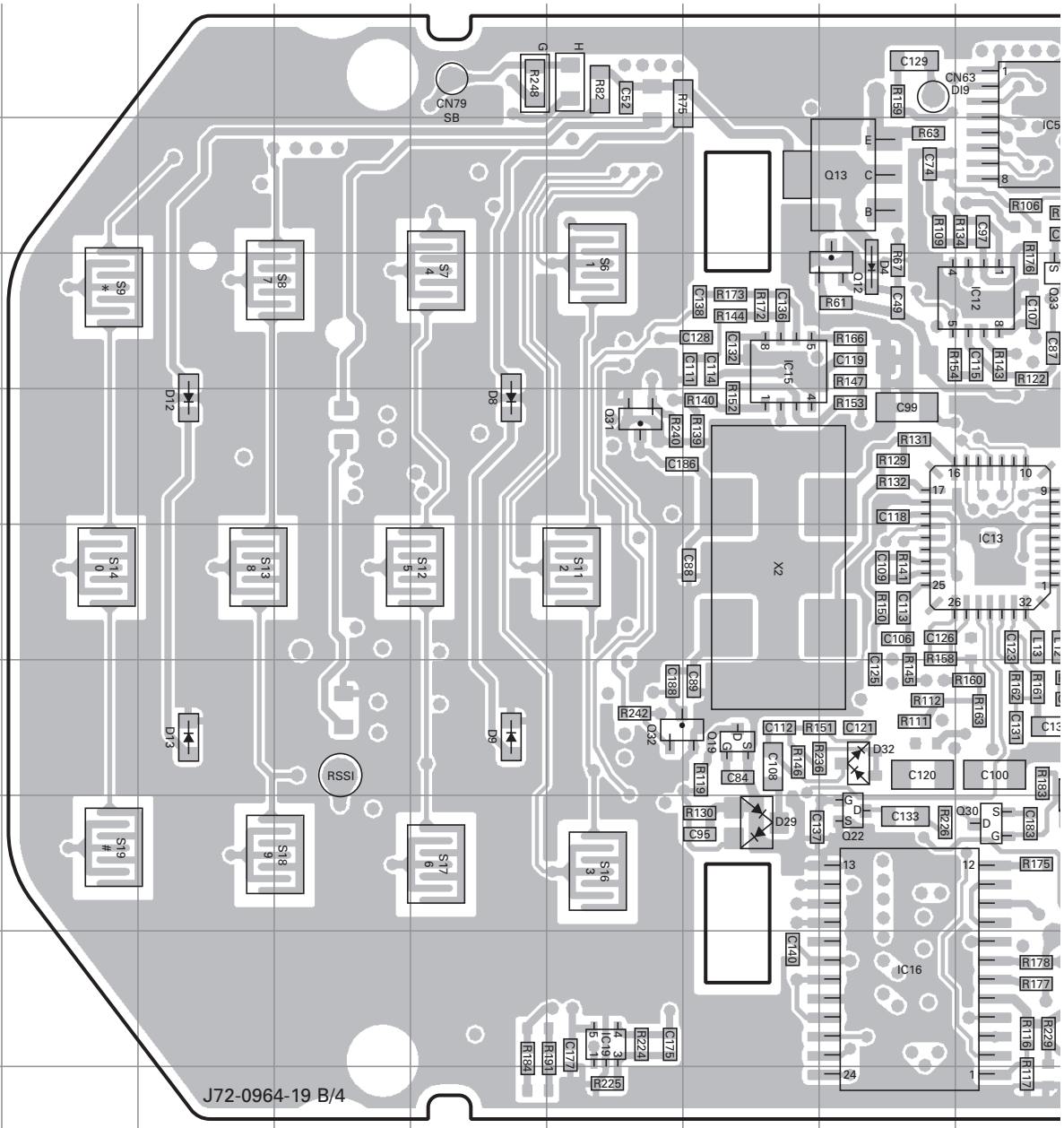

PC BOARD TK-3170/3173

TX-RX UNIT (X57-7010-XX) (C/4) Component side view (J72-0964-19 C/4)
-10 : TK-3170 K -11 : TK-3170 K4 -12 : TK-3170 K3 -13 : TK-3170 K6
-14 : TK-3173 K -21 : TK-3170 M -22 : TK-3170 M3

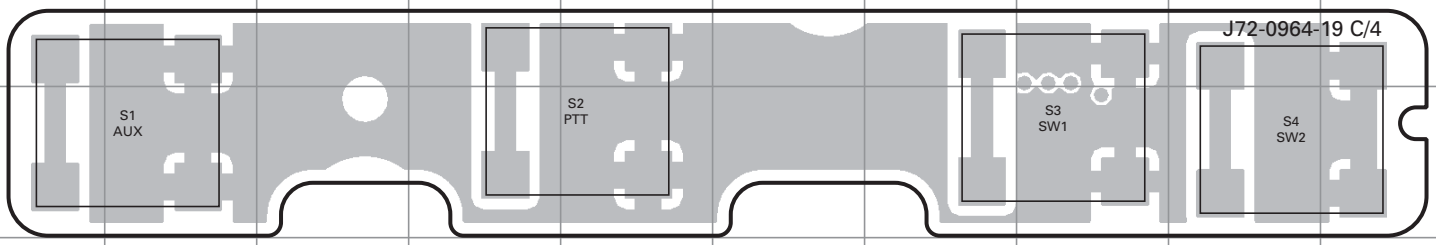

TX-RX UNIT (X57-7010-XX) (B/4) Component side view (J72-0964-19 B/4)
-10 : TK-3170 K -11 : TK-3170 K4 -12 : TK-3170 K3 -13 : TK-3170 K6
-14 : TK-3173 K -21 : TK-3170 M -22 : TK-3170 M3

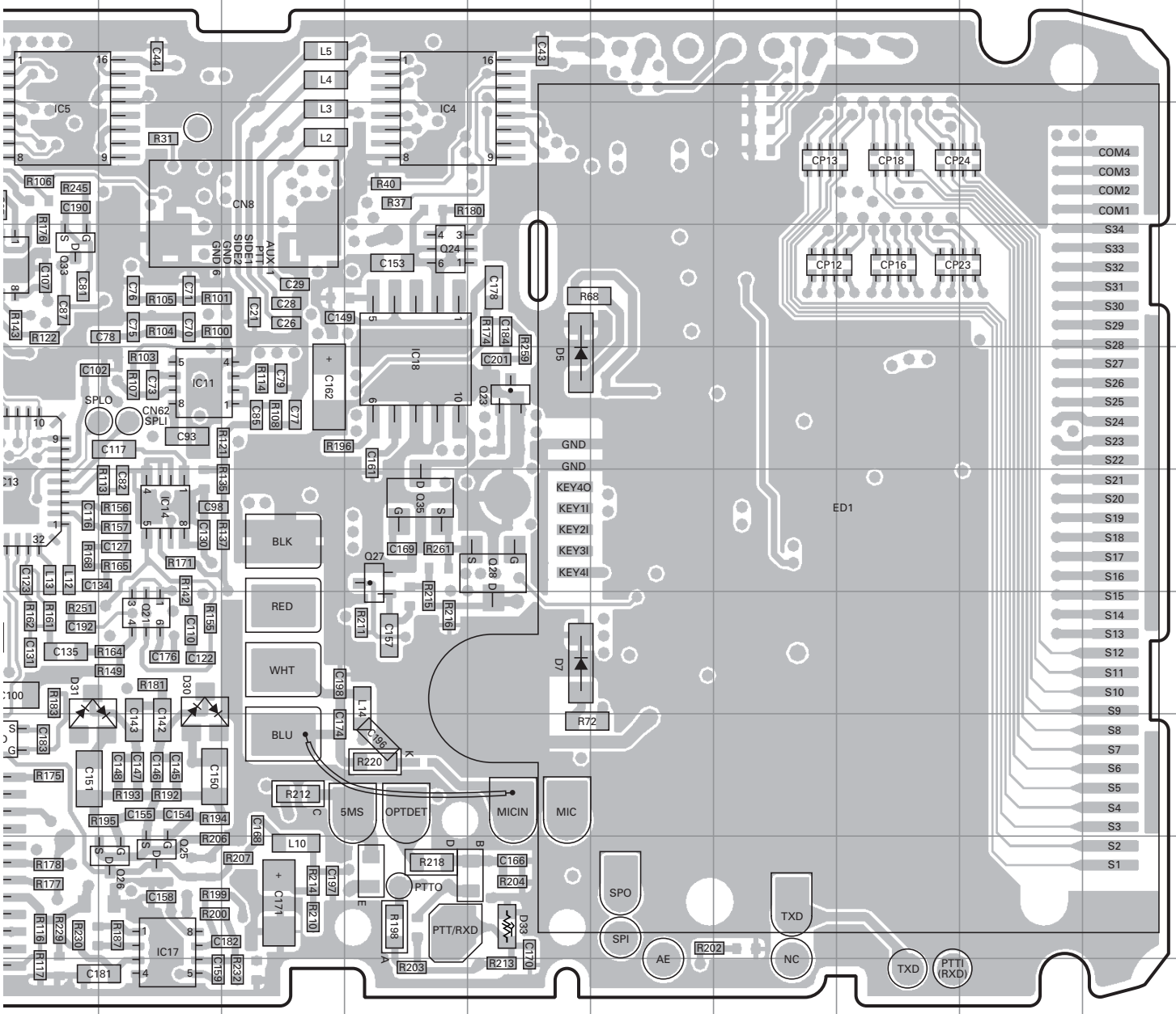

TK-3170/3173 PC BOARD

PC BOARD TK-3170/3173

Component side
Layer 1
Layer 2
Layer 3
Layer 4
Layer 5
Layer 6
Foil side

Ref. No.	Address	Ref. No.	Address	Ref. No.	Address	Ref. No.	Address	Ref. No.	Address
IC4	6M	IC17	12K	Q23	8N	Q32	10G	D12	8D
IC5	6J	IC18	8M	Q24	7M	Q33	7J	D13	10D
IC11	8K	IC19	12G	Q25	12K	Q35	9M	D29	11H
IC12	7J	Q12	7I	Q26	12K	D4	7I	D30	10K
IC13	9J	Q13	6I	Q27	9M	D5	8N	D31	10J
IC14	9K	Q19	10H	Q28	9N	D7	10N	D32	10I
IC15	7H	Q21	10K	Q30	11J	D8	8F	D33	12N
IC16	12I	Q22	11I	Q31	8G	D9	10F		

TX-RX UNIT (X57-7010-XX) (C/4) Component side view (J72-0964-19 C/4)
-10 : TK-3170 K -11 : TK-3170 K4 -12 : TK-3170 K3 -13 : TK-3170 K6
-14 : TK-3173 K -21 : TK-3170 M -22 : TK-3170 M3

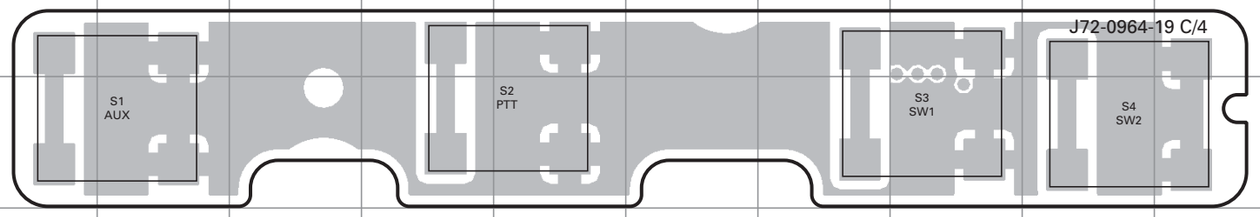

TX-RX UNIT (X57-7010-XX) (B/4) Component side view (J72-0964-19 B/4)
-10 : TK-3170 K -11 : TK-3170 K4 -12 : TK-3170 K3 -13 : TK-3170 K6
-14 : TK-3173 K -21 : TK-3170 M -22 : TK-3170 M3

TX-RX UNIT (X57-7010-XX) (B/4) Component side view (J72-0964-19 B/4)
-10 : TK-3170 K -11 : TK-3170 K4 -12 : TK-3170 K3 -13 : TK-3170 K6
-14 : TK-3173 K -21 : TK-3170 M -22 : TK-3170 M3

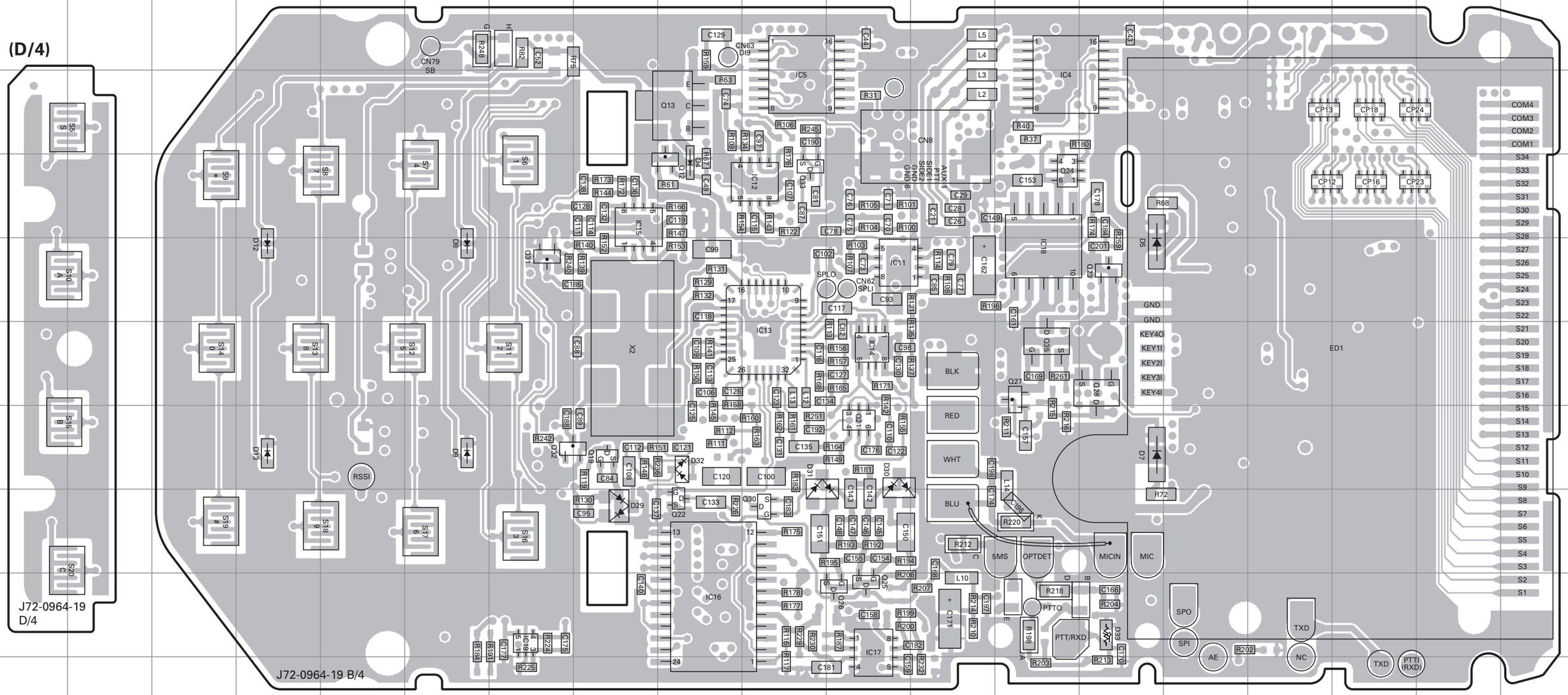

TK-3170/3173 PC BOARD

TX-RX UNIT (X57-7010-XX) (C/4) Foil side view (J72-0964-19 C/4)
-10 : TK-3170 K -11 : TK-3170 K4 -12 : TK-3170 K3 -13 : TK-3170 K6
-14 : TK-3173 K -21 : TK-3170 M -22 : TK-3170 M3

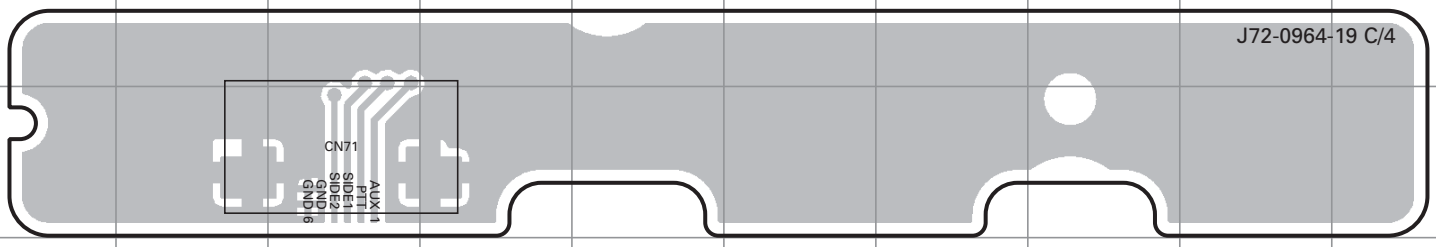

TX-RX UNIT (X57-7010-XX) (B/4) Foil side view (J72-0964-19 B/4)
-10 : TK-3170 K -11 : TK-3170 K4 -12 : TK-3170 K3 -13 : TK-3170 K6
-14 : TK-3173 K -21 : TK-3170 M -22 : TK-3170 M3

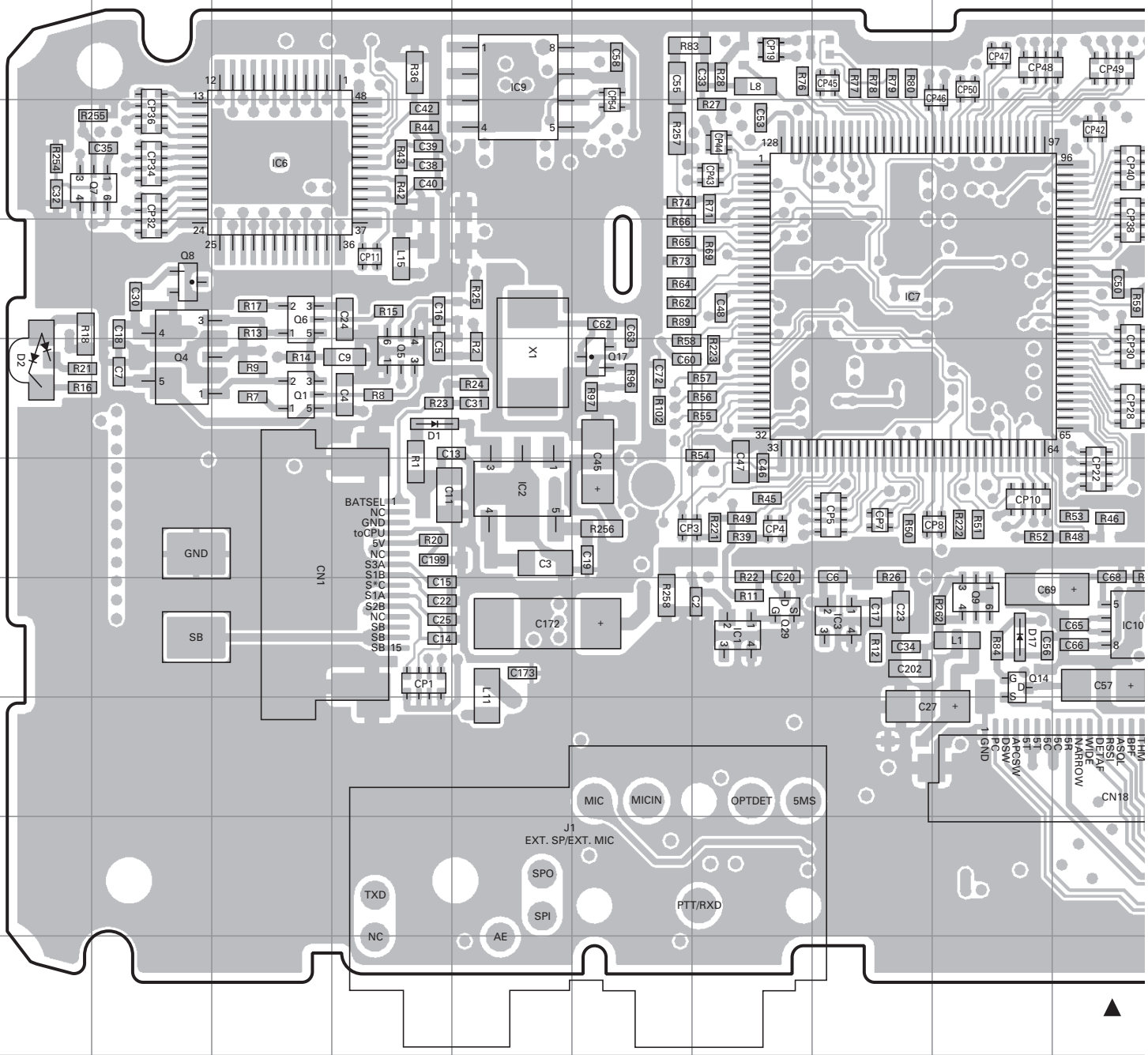

PC BOARD TK-3170/3173

Ref. No.	Address	Ref. No.	Address	Ref. No.	Address	Ref. No.	Address
IC1	10G	Q1	8C	Q15	5M	D15	5J
IC2	9E	Q4	8B	Q16	5N	D16	5K
IC3	10H	Q5	8D	Q17	8F	D17	10I
IC6	6C	Q6	7C	Q29	10G	D24	5L
IC7	7H	Q7	6B	Q34	9O	D25	5M
IC8	7K	Q8	7B	D1	8D	D26	5M
IC9	5E	Q9	10I	D2	8A	D27	5M
IC10	10J	Q14	10I	D14	8M	D28	10K

Component side
Layer 1
Layer 2
Layer 3
Layer 4
Layer 5
Layer 6
Foil side

TX-RX UNIT (X57-7010-XX) (B/4) Foil side view (J72-0964-19 B/4)
-10 : TK-3170 K -11 : TK-3170 K4 -12 : TK-3170 K3 -13 : TK-3170 K6
-14 : TK-3173 K -21 : TK-3170 M -22 : TK-3170 M3

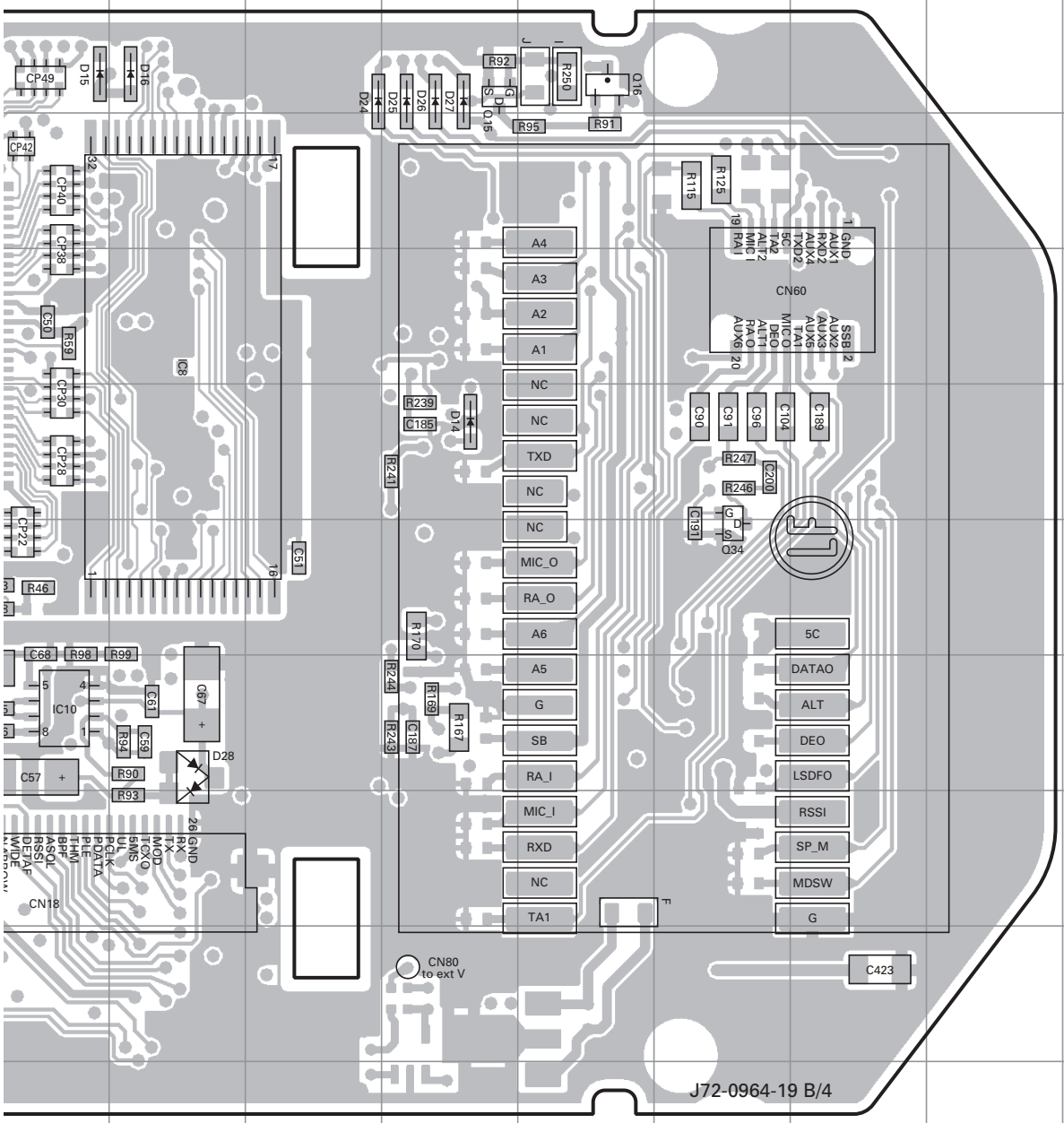

(D/4)

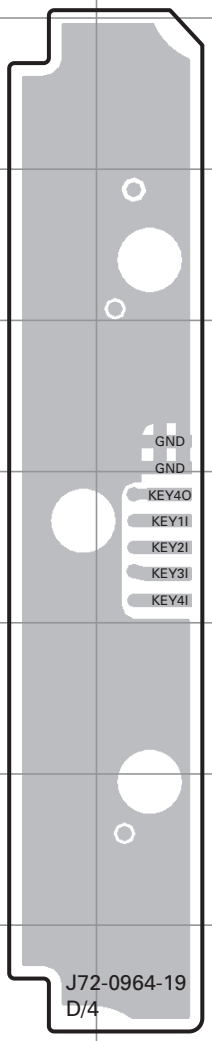

TK-3170/3173 PC BOARD

PC BOARD TK-3170/3173

TX-RX UNIT (X57-7010-XX) (C/4) Foil side view (J72-0964-19 C/4)
-10 : TK-3170 K -11 : TK-3170 K4 -12 : TK-3170 K3 -13 : TK-3170 K6
-14 : TK-3173 K -21 : TK-3170 M -22 : TK-3170 M3

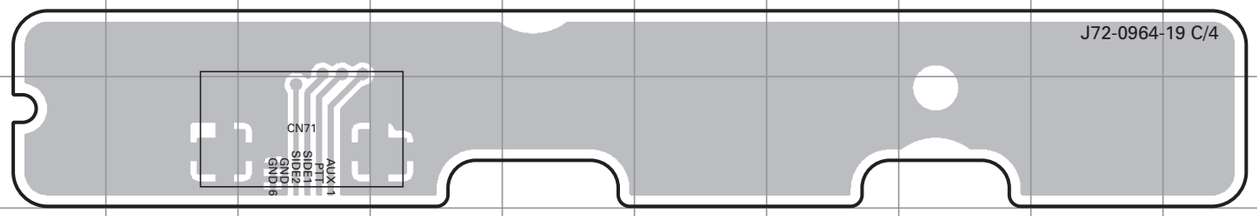

Ref. No.	Address	Ref. No.	Address	Ref. No.	Address	Ref. No.	Address
IC1	10G	Q1	8C	Q15	5M	D15	5J
IC2	9E	Q4	8B	Q16	5N	D16	5K
IC3	10H	Q5	8D	Q17	8F	D17	10I
IC6	6C	Q6	7C	Q29	10G	D24	5L
IC7	7H	Q7	6B	Q34	9O	D25	5M
IC8	7K	Q8	7B	D1	8D	D26	5M
IC9	5E	Q9	10I	D2	8A	D27	5M
IC10	10J	Q14	10I	D14	8M	D28	10K

Component side
Layer 1
Layer 2
Layer 3
Layer 4
Layer 5
Layer 6
Foil side

TX-RX UNIT (X57-7010-XX) (B/4) Foil side view (J72-0964-19 B/4)
-10 : TK-3170 K -11 : TK-3170 K4 -12 : TK-3170 K3 -13 : TK-3170 K6
-14 : TK-3173 K -21 : TK-3170 M -22 : TK-3170 M3

TX-RX UNIT (X57-7010-XX) (B/4) Foil side view (J72-0964-19 B/4)
-10 : TK-3170 K -11 : TK-3170 K4 -12 : TK-3170 K3 -13 : TK-3170 K6
-14 : TK-3173 K -21 : TK-3170 M -22 : TK-3170 M3

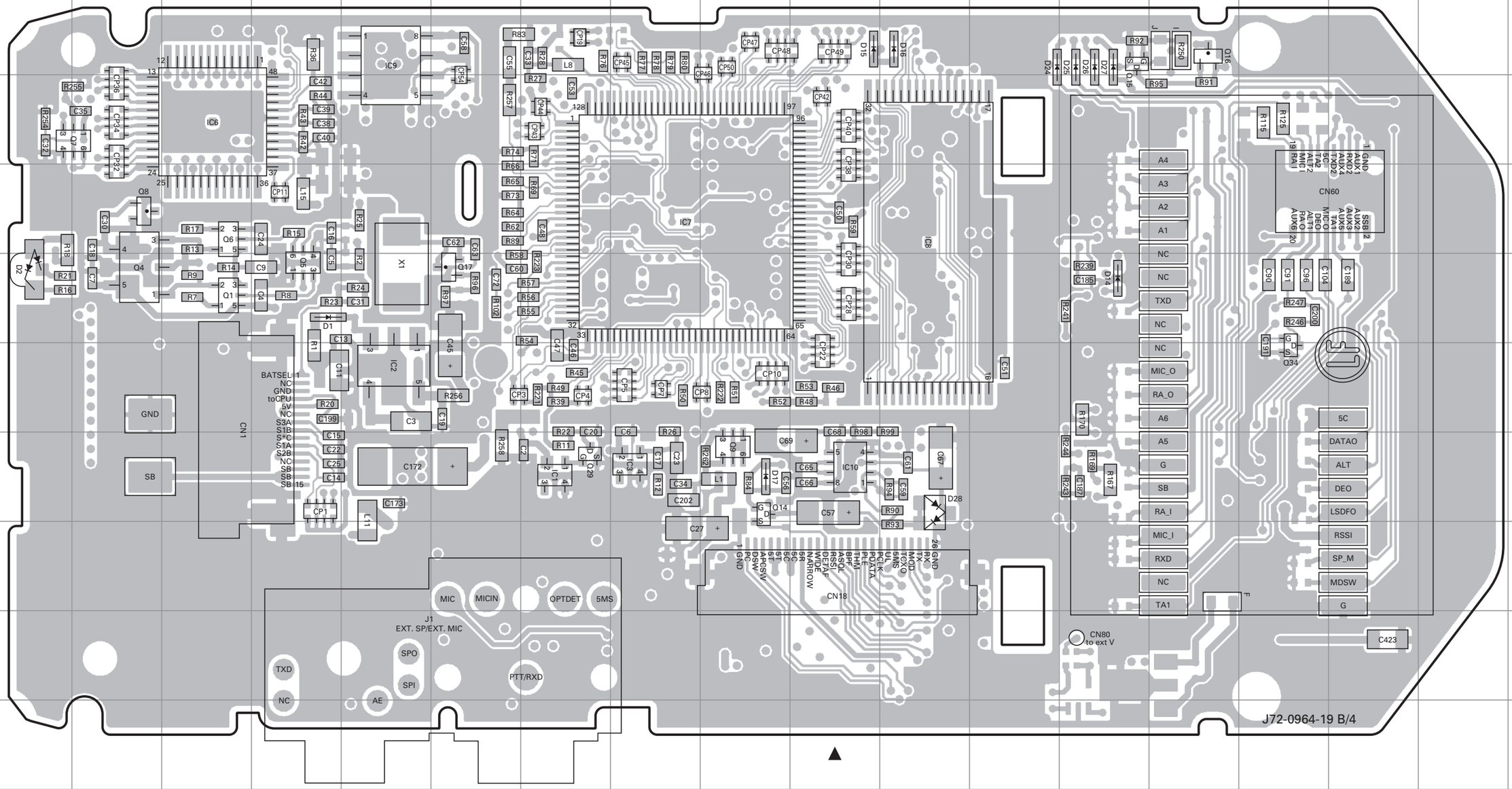

(D/4)

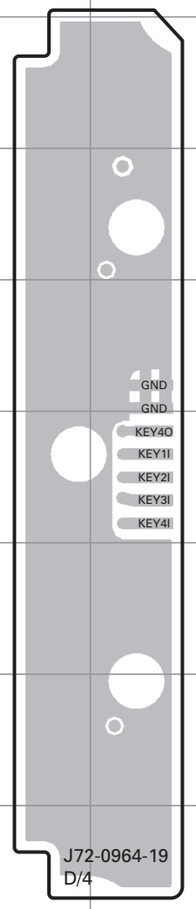

TK-3170/3173 SCHEMATIC DIAGRAM

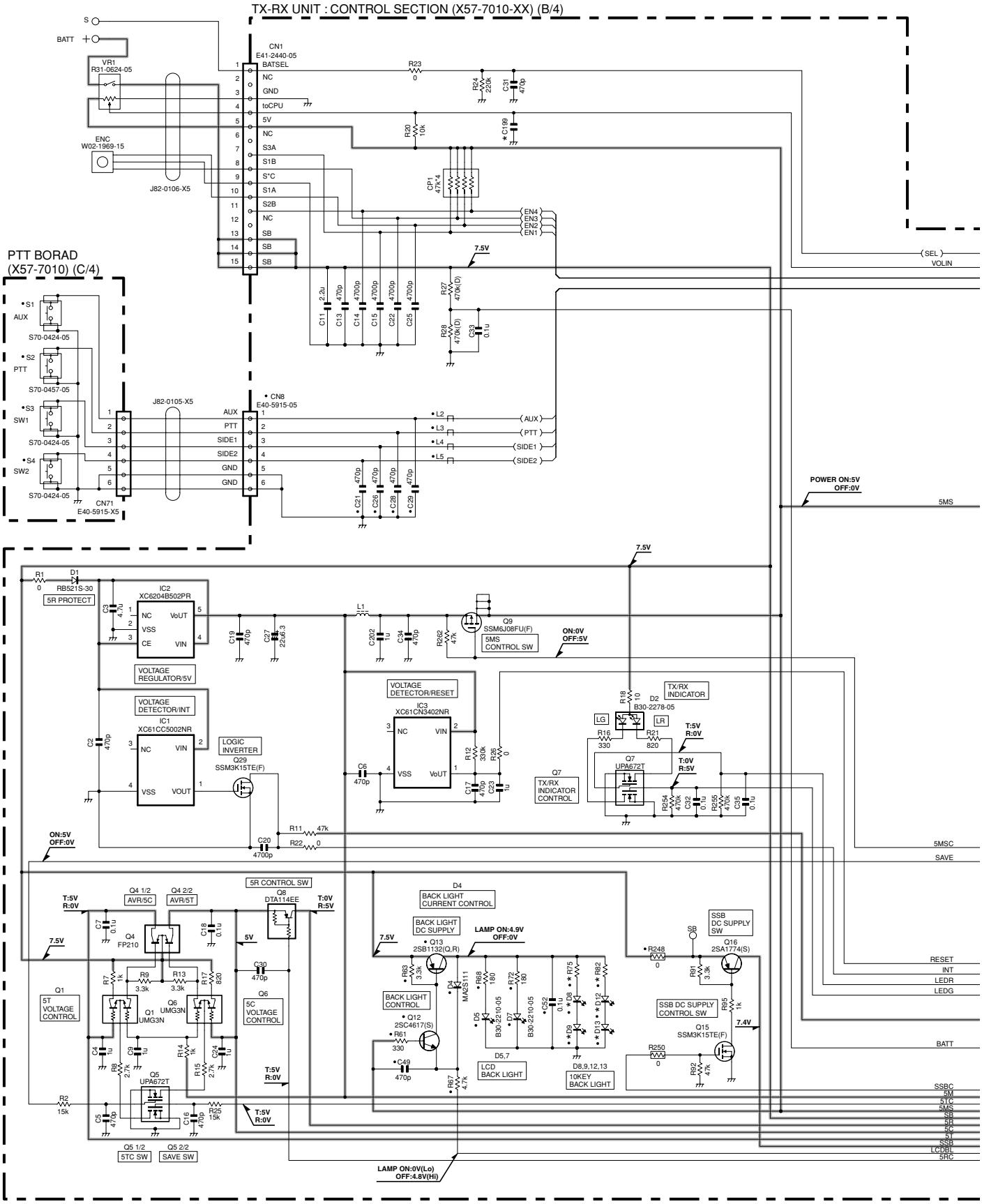

X57-7010-XX			D8	D9	D12	D13	R75	R82	C199
-10	K	TK-3170 (4KEY)	NO	NO	NO	NO	NO	NO	0.1u
-11	K4	TK-3170 (16KEY)	B30-2050-05	B30-2050-05	B30-2050-05	B30-2050-05	390	390	0.1u
-12	K3	TK-3170 (4KEY)	NO	NO	NO	NO	NO	NO	NO
-13	K6	TK-3170 (16KEY)	B30-2050-05	B30-2050-05	B30-2050-05	B30-2050-05	390	390	NO
-14	K	TK-3173 (4KEY)	NO	NO	NO	NO	NO	NO	0.1U
-21	M	TK-3170 (16KEY)	B30-2050-05	B30-2050-05	B30-2050-05	B30-2050-05	390	390	0.1u
-22	M3	TK-3170 (16KEY)	B30-2050-05	B30-2050-05	B30-2050-05	B30-2050-05	390	390	NO

X57-701 (B/4) 1/6, X57-701 (C/4) 1/1

SCHEMATIC DIAGRAM TK-3170/3173

TX-RX UNIT (X57-7010-XX) (B/4)

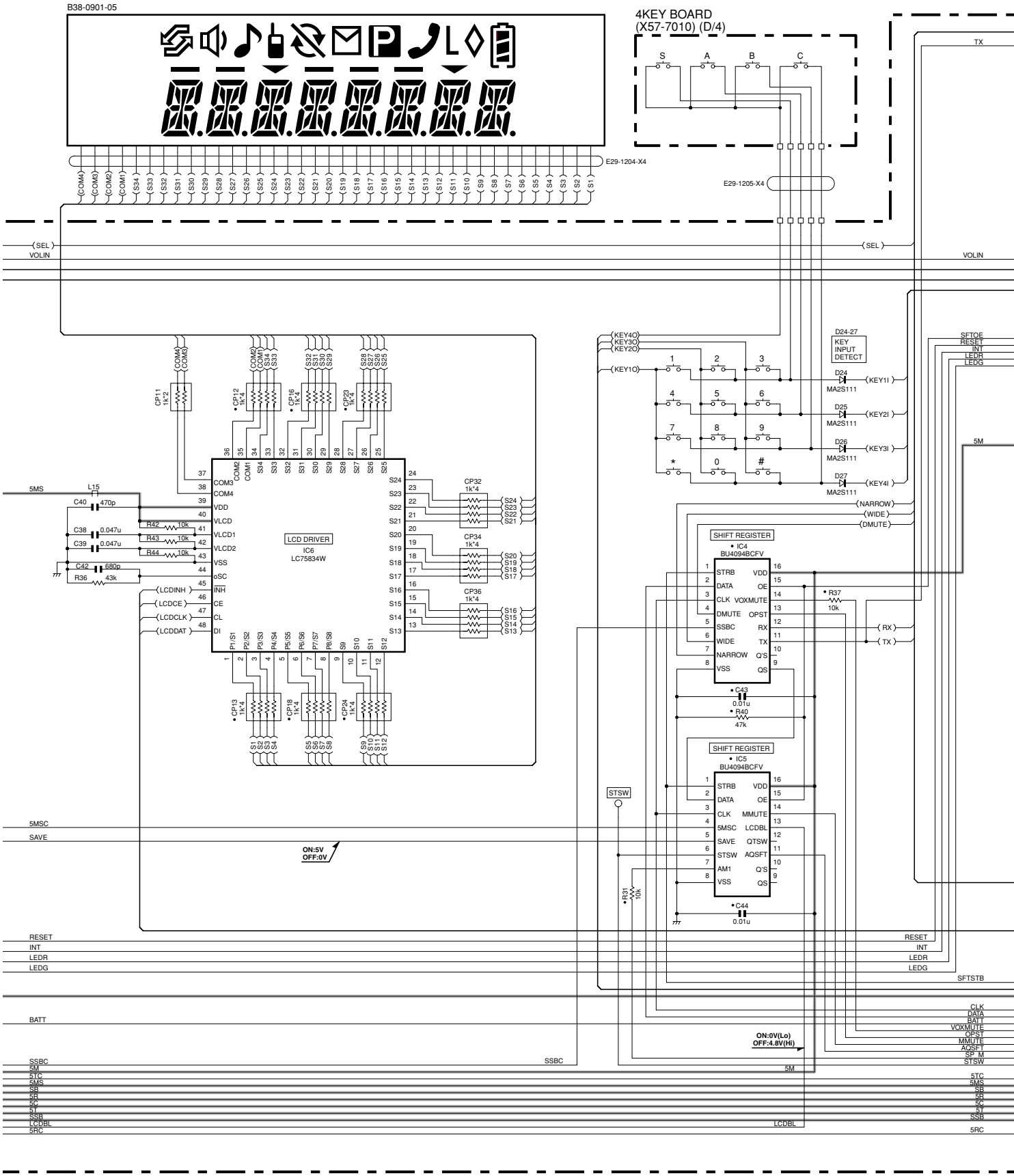

TK-3170/3173 SCHEMATIC DIAGRAM

TX-RX UNIT (X57-7010-XX) (B/4)

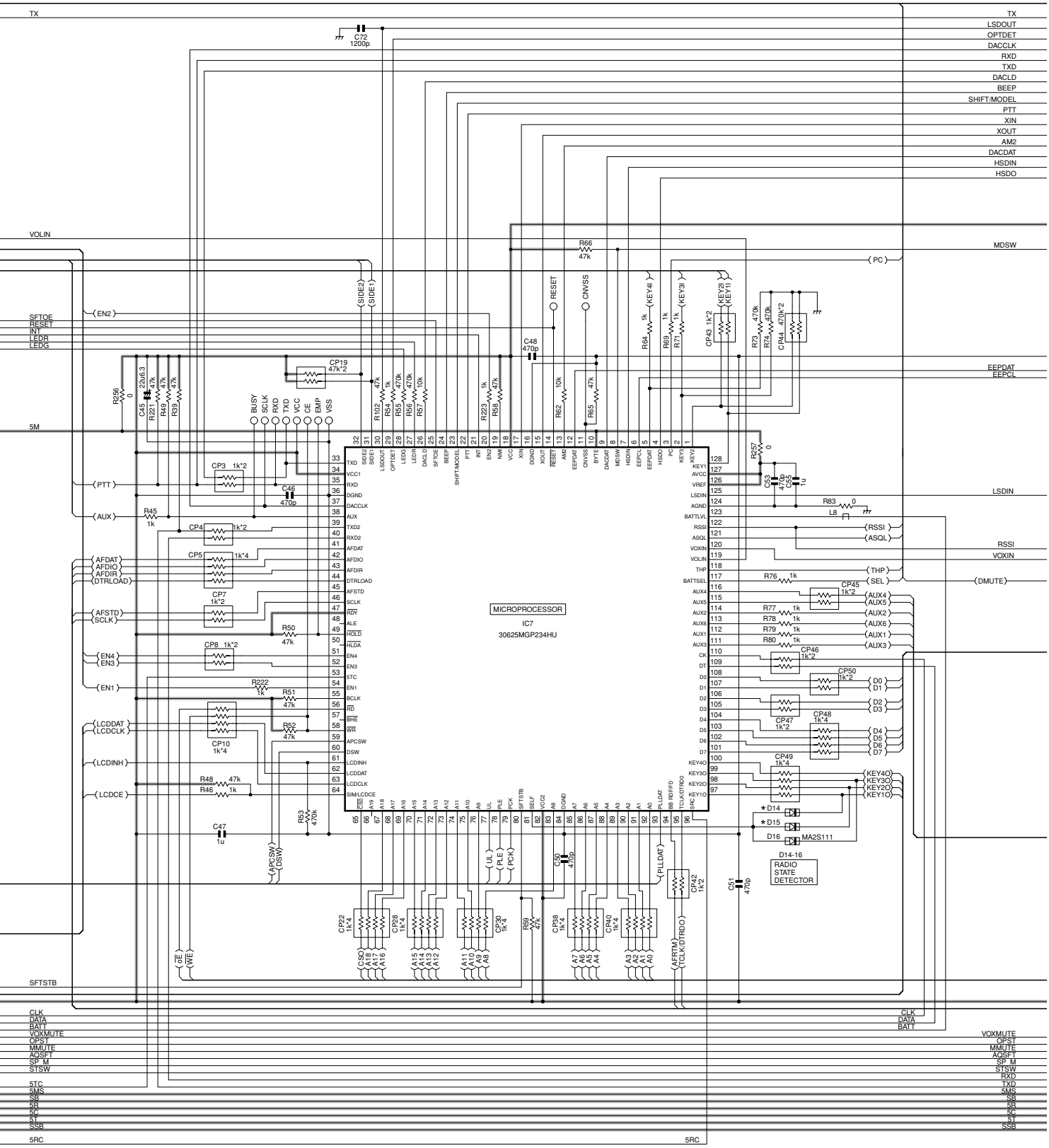

X57-7010-XX		D14	D15
-10	K	TK-3170 (4KEY)	MA2S111	NO
-11	K4	TK-3170 (16KEY)	MA2S111	NO
-12	K3	TK-3170 (4KEY)	MA2S111	NO
-13	K6	TK-3170 (16KEY)	MA2S111	NO
-14	K	TK-3173 (4KEY)	MA2S111	MA2S111
-21	M	TK-3170 (16KEY)	NO	MA2S111
-22	M3	TK-3170 (16KEY)	NO	MA2S111

SCHEMATIC DIAGRAM TK-3170/3173

TX-RX UNIT (X57-7010-XX) (B/4)

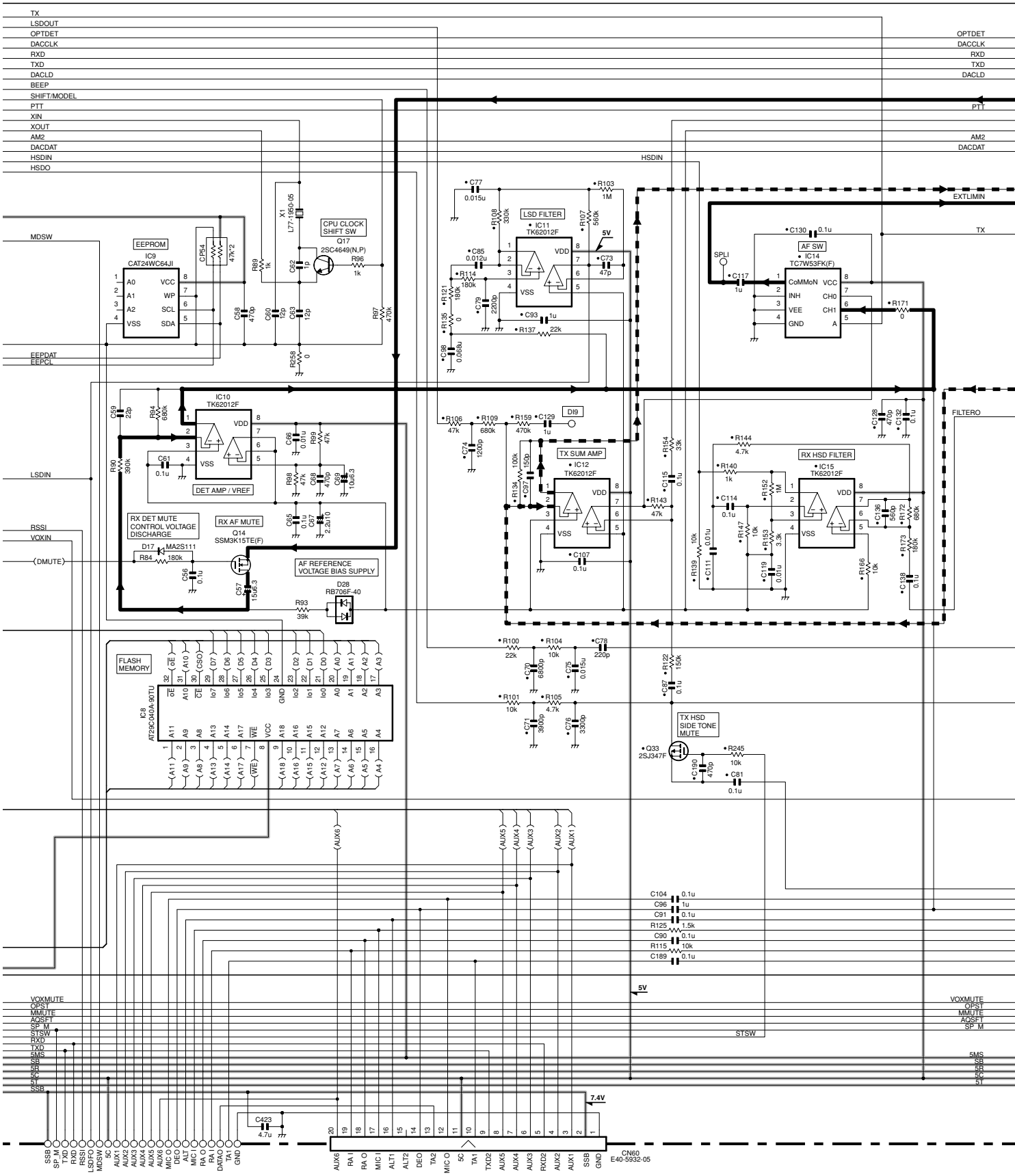

TK-3170/3173 SCHEMATIC DIAGRAM

TX-RX UNIT (X57-7010-XX) (B/4)

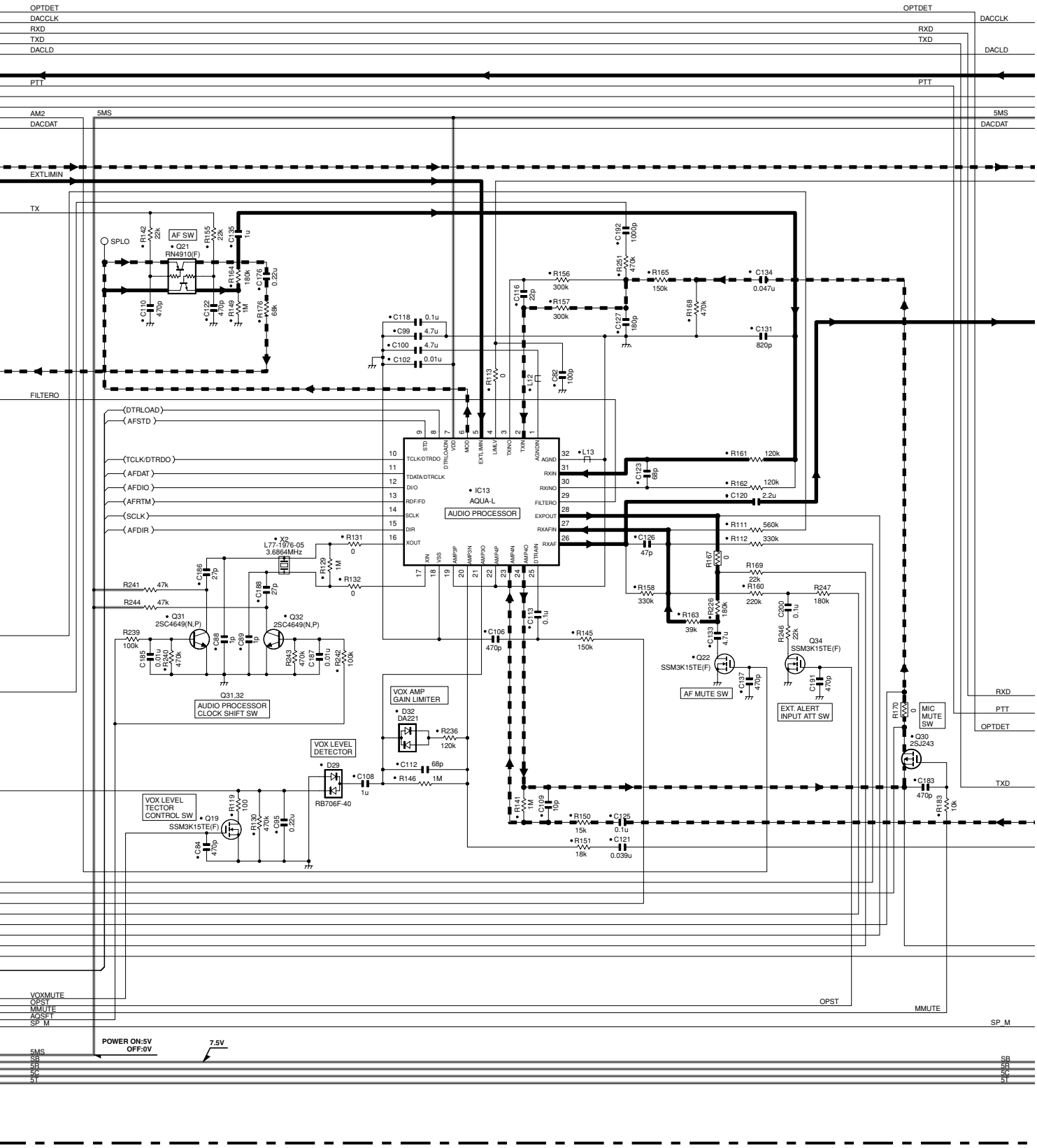

SCHEMATIC DIAGRAM TK-3170/3173

TX-RX UNIT (X57-7010-XX) (B/4)

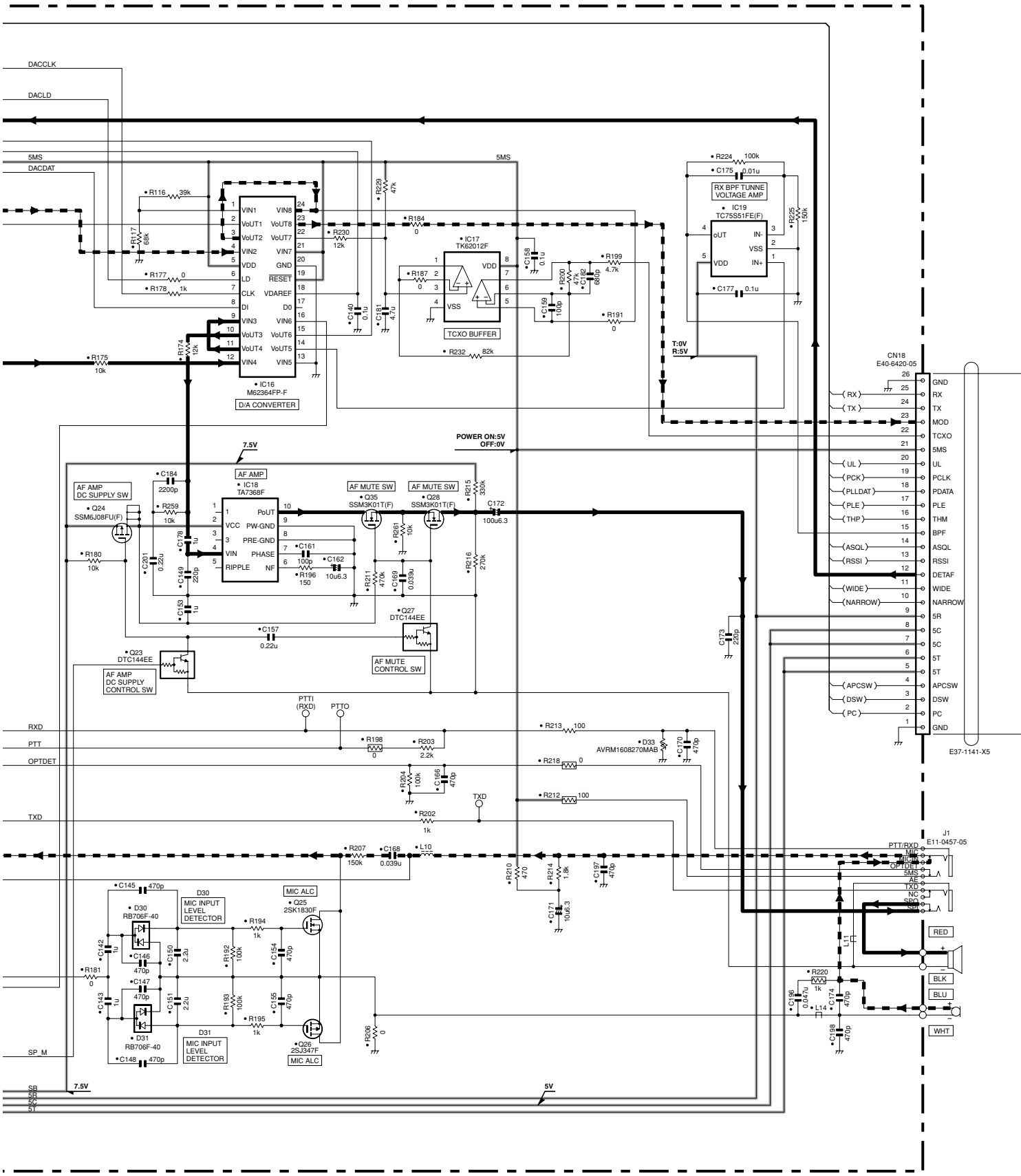

Note : The components marked with a dot (•) are parts of layer 1.

TK-3170/3173 SCHEMATIC DIAGRAM

TX-RX UNIT (X57-7010-XX) (A/4)

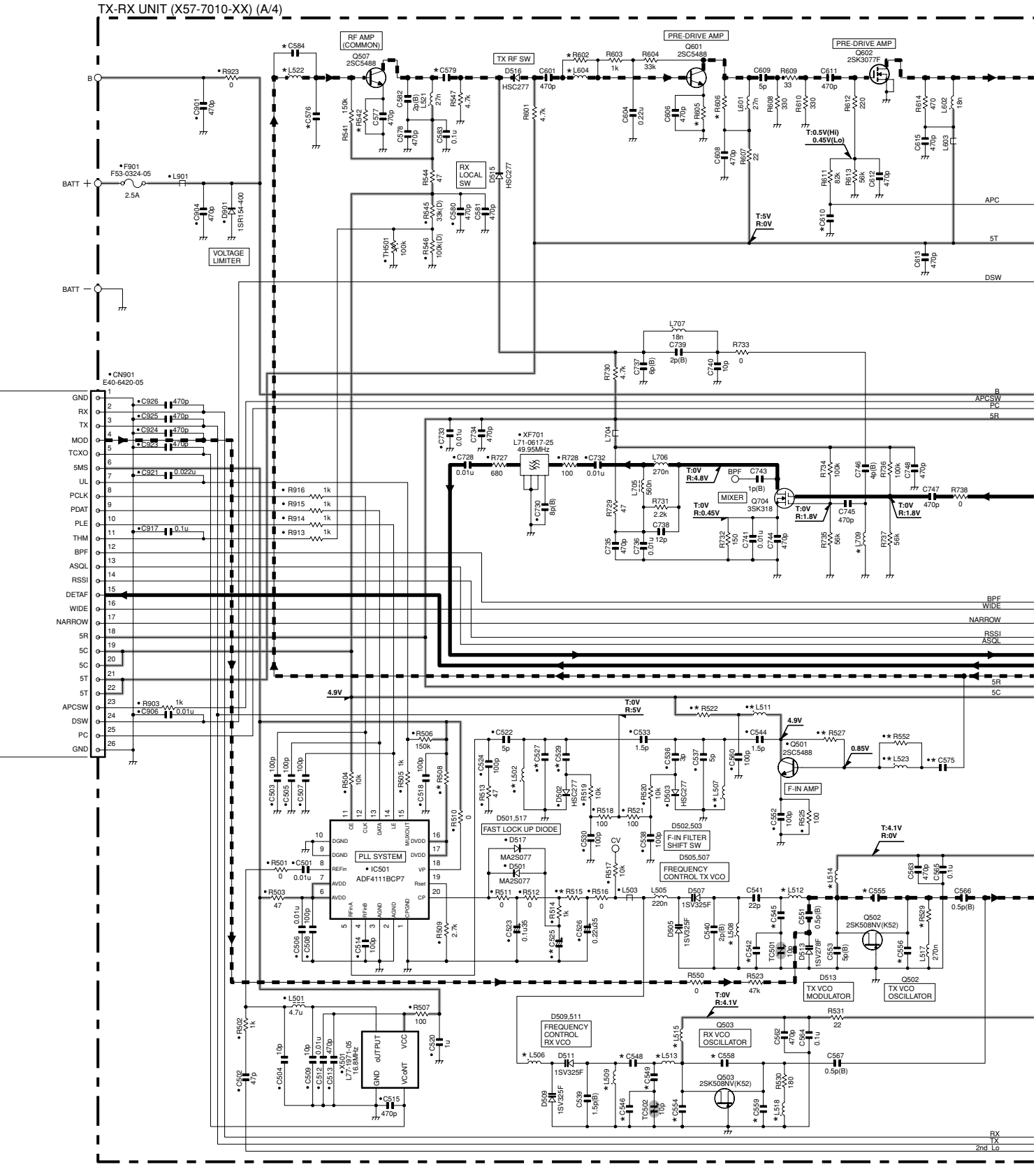

X57-7010-XX			L502	L506	L507	L508	L509	L511	L512	L513	L514	L515	L518	L522	L523	L604	L709	R508	R515	R522	R527	R529	R542	R552	R602	R605	R606
-10	K	TK-3170 (4KEY)	3.3n	220n	3.3n	82n	82n	12n	18n	22n	150n	180n	150n	47n	47n	18n	27n	33	560	22	220k	150	68	NO	NO	47	NO
-11	K4	TK-3170 (16KEY)																									
-14	K	TK-3173 (4KEY)																									
-21	M	TK-3170 (16KEY)																									
-12	K3	TK-3170 (4KEY)	3.9n	270n	3.9n	220n	120n	15n	22n	27n	220n	220n	270n	NO	NO	NO	33n	47	330	100	100k	180	330	0	0	100	470
-13	K6	TK-3170 (16KEY)																									
-22	M3	TK-3170 (4KEY)																									

X57-7010-XX			C525	C527	C529	C542	C545	C546	C548	C549	C554	C555	C556	C558	C559	C575	C576	C579	C584	C610
-10	K	TK-3170 (4KEY)	2.2u/10V	5p	3p	1.5p	9p	1.5p	47p	8p(B)	4p(B)	4p(B)	4p(B)	6p(B)	9p(B)	2p(B)	1p(B)	4p(B)	NO	NO
-11	K4	TK-3170 (16KEY)																		
-14	K	TK-3173 (4KEY)																		
-21	M	TK-3170 (16KEY)																		
-12	K3	TK-3170 (4KEY)	1u/25V	8p	2p	3p	12p	5p	33p	15p	5p(B)	5p(B)	6p(B)	5p(B)	8p(B)	10p	NO	3p(B)	10p	470p
-13	K6	TK-3170 (16KEY)																		
-22	M3	TK-3170 (4KEY)																		

SCHEMATIC DIAGRAM TK-3170/3173

TX-RX UNIT (X57-7010-XX) (A/4)

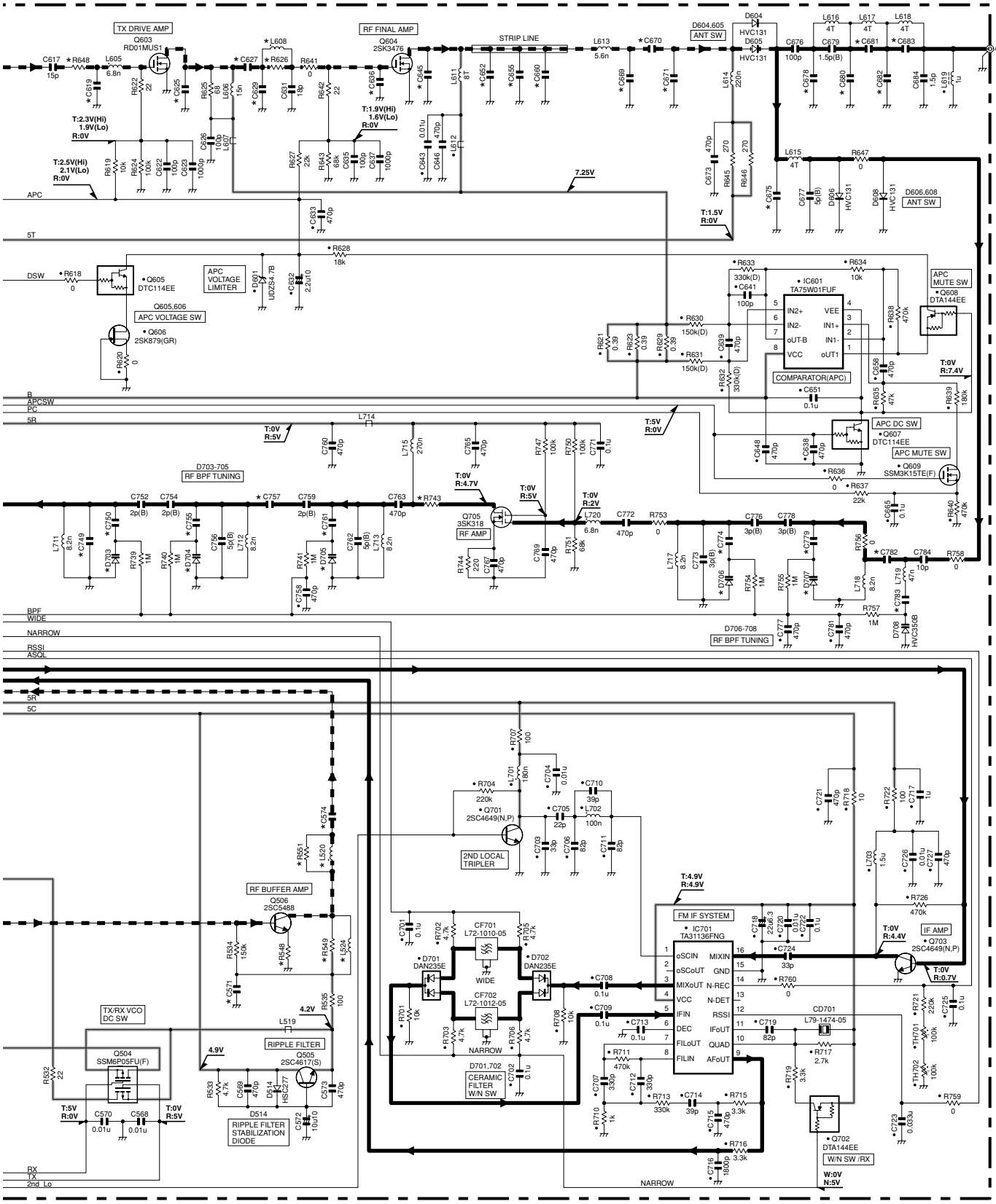

X57-7010-XX			D703	D704	D705	D706	D707	L520	L524	L608	R548	R549	R551	R626	R648	R743	C571	C574	C619	C625	C627	C629	C636	C645	C652	C655
-10	K	TK-3170 (4KEY)	HVC355B	HVC355B	HVC355B	HVC355B	HVC355B	68n	NO	NO	47	680	NO	0	0	100	0.1u	100p	15p	7p	39p	15p	22p	27p	22p	NO
-11	K4	TK-3170 (16KEY)																								
-14	K	TK-3173 (4KEY)																								
-21	M	TK-3170 (16KEY)																								
-12	K3	TK-3170 (4KEY)	HVC350B	HVC350B	HVC350B	HVC350B	HVC350B	NO	22n	1.2n	0	NO	0	NO	5.6	47	470p	10p	NO	12p	27p	27p	18p	15p	NO	27p
-13	K6	TK-3170 (16KEY)																								
-22	M3	TK-3170 (4KEY)																								

X57-7010-XX			C660	C669	C670	C671	C675	C678	C680	C681	C682	C683	C749	C750	C755	C757	C761	C774	C779	C782	C783
-10	K	TK-3170 (4KEY)	22p	6p(B)	33p	3.5p(B)	2p(B)	3p(B)	4p(B)	2p(B)	5p(B)	2p(B)	3.5p(B)	33p	33p	1.5p(B)	33p	33p	33p	33p	6p(B)
-11	K4	TK-3170 (16KEY)																			
-14	K	TK-3173 (4KEY)																			
-21	M	TK-3170 (16KEY)																			
-12	K3	TK-3170 (4KEY)	15p	8p(B)	100p	5p(B)	4p(B)	4p(B)	7p(B)	3p(B)	7p(B)	2.5p(B)	4p(B)	18p	18p	2p(B)	18p	18p	18p	22p	8p(B)
-13	K6	TK-3170 (16KEY)																			
-22	M3	TK-3170 (4KEY)																			

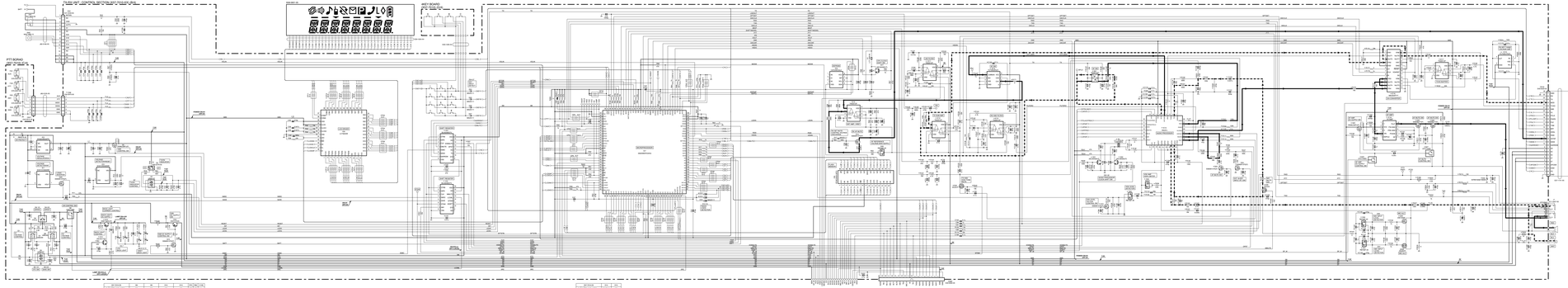
FRONT CONTROL SECTION (MAIN UNIT)
PTT BOARD
DISPLAY UNIT
KEY BOARD
MAIN UNIT
TX/RX UNIT (VHF)
TX/RX UNIT (UHF)

| | | |

TK-3170/3173 BLOCK DIAGRAM

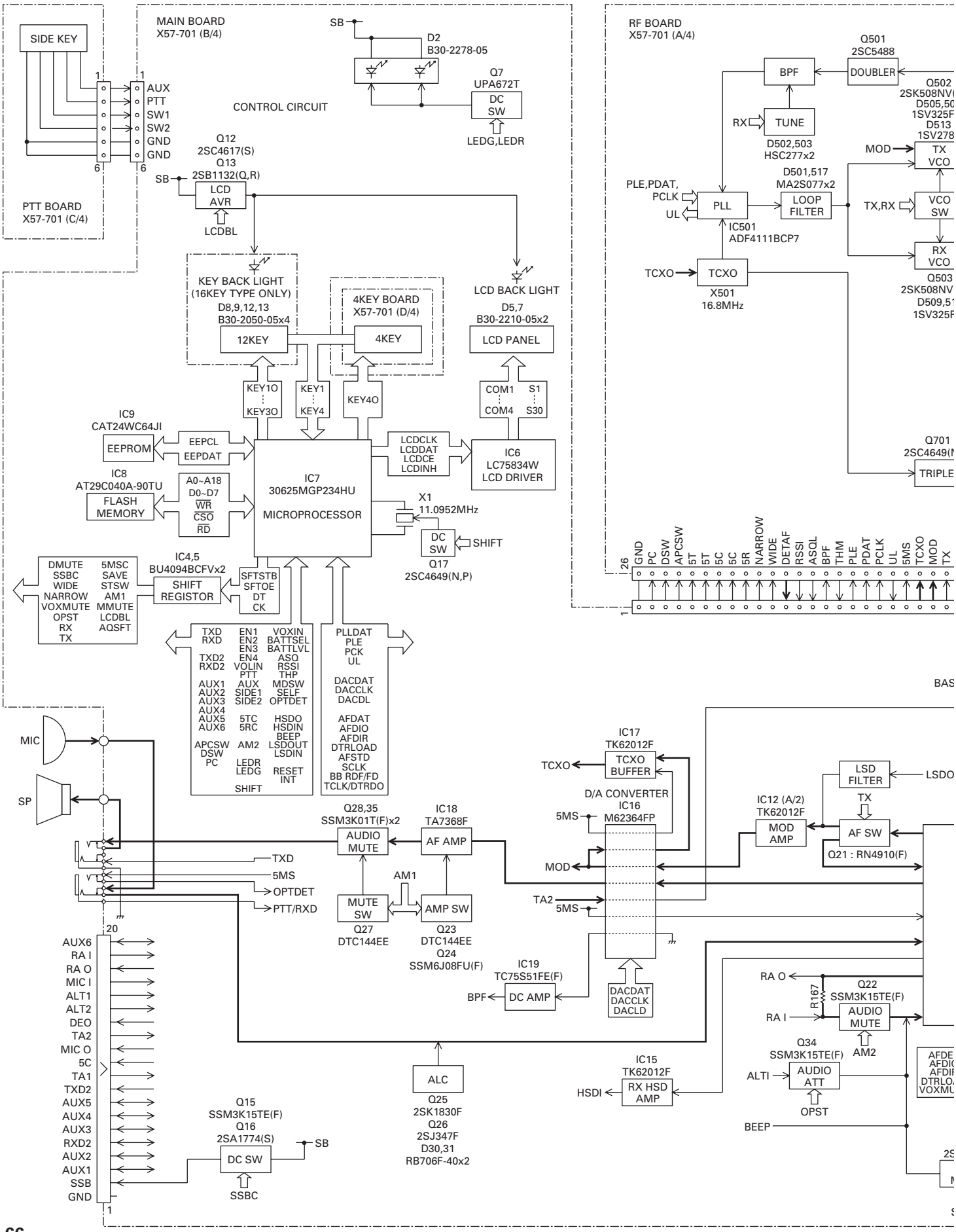

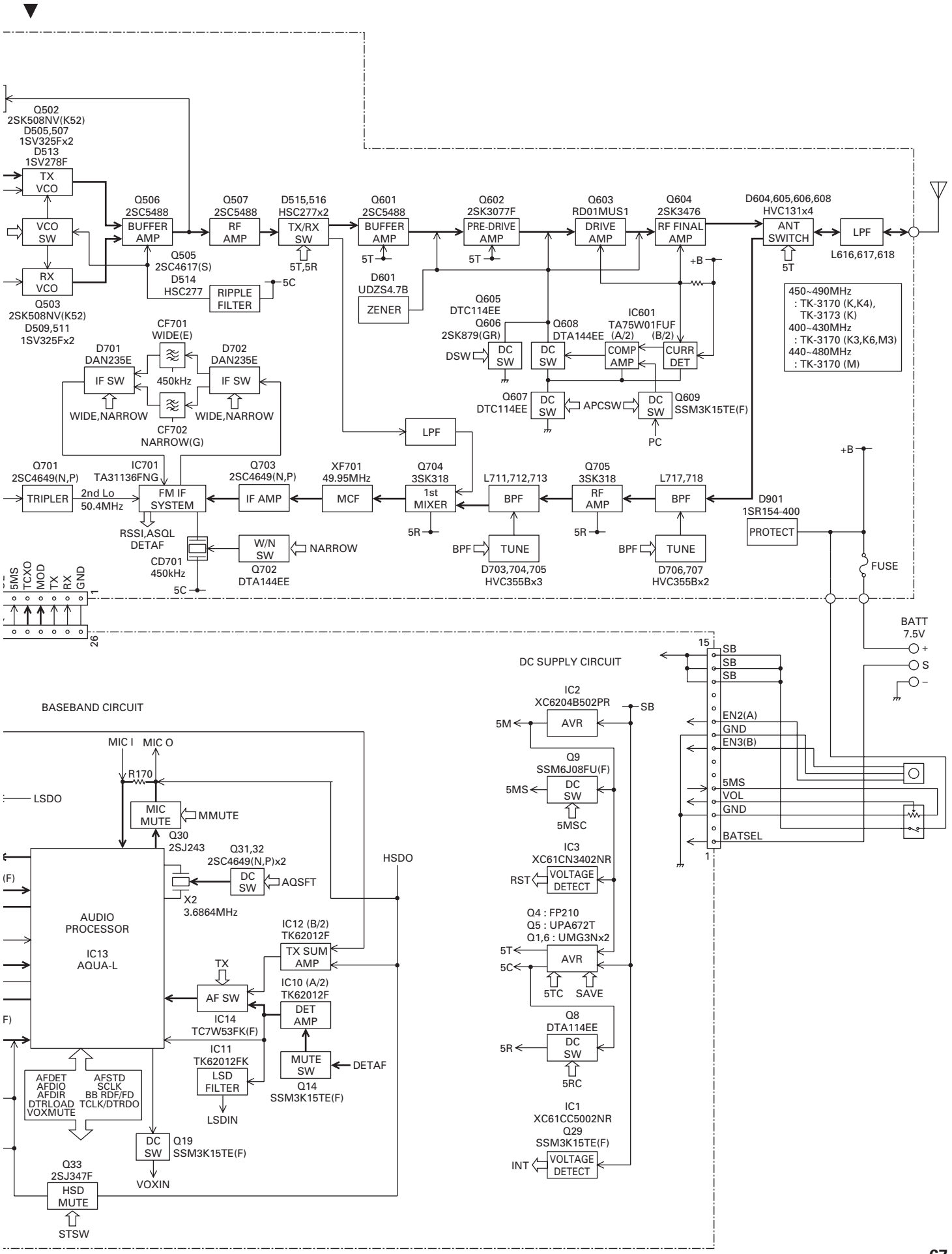
Q502
2SK508NV(K52)
D505,507
1SV325Fx2
D513
1SV278F
TX VCO
VCO SW
RX VCO
Q503
2SK508NV(K52)
D509,511
1SV325Fx2
Q506
2SC5488
BUFFER AMP
Q505
2SC4617(S)
D514
HSC277
RIPPLE FILTER
5C
Q507
2SC5488
RF AMP
D515,516
HSC277x2
TX/RX SW
5T,5R
Q601
2SC5488
BUFFER AMP
5T
D601
UDZS4.7B
ZENER
Q602
2SK3077F
PRE-DRIVE AMP
5T
Q603
RD01MUS1
DRIVE AMP
Q604
2SK3476
RF FINAL AMP
+B
D604,605,606,608
HVC131x4
ANT SWITCH
5T
LPF
L616,617,618
450~490MHz
: TK-3170 (K,K4),
TK-3173 (K)
400~430MHz
: TK-3170 (K3,K6,M3)
440~480MHz
: TK-3170 (M)
Q605
DTC114EE
Q606
2SK879(GR)
Q608
DTA144EE
IC601
TA75W01FUF
(A/2)
(B/2)
DSW
DC SW
COMP AMP
CURR DET
Q607
DTC114EE
APCSW
Q609
SSM3K15TE(F)
PC
CF701
WIDE(E)
D701
DAN235E
D702
DAN235E
IF SW
450kHz
WIDE,NARROW
CF702
NARROW(G)
LPF
Q701
2SC4649(N,P)
TRIPLER
2nd Lo
50.4MHz
IC701
TA31136FNG
FM IF SYSTEM
RSSI,ASQL
DETAF
Q703
2SC4649(N,P)
IF AMP
XF701
49.95MHz
MCF
Q704
3SK318
1st MIXER
5R
L711,712,713
BPF
Q705
3SK318
RF AMP
L717,718
BPF
D901
1SR154-400
PROTECT
FUSE
W/N SW
NARROW
Q702
DTA144EE
CD701
450kHz
BPF
TUNE
D703,704,705
HVC355Bx3
D706,707
HVC355Bx2
5MS
TCXO
MOD
TX
RX
GND
1
26
BATT
7.5V
+
S
–
15
SB
SB
SB
EN2(A)
GND
EN3(B)
5MS
VOL
GND
BATSEL
1
DC SUPPLY CIRCUIT
IC2
XC6204B502PR
AVR
5M
Q9
SSM6J08FU(F)
5MS
5MSC
IC3
XC61CN3402NR
RST
VOLTAGE DETECT
Q4 : FP210
Q5 : UPA672T
Q1,6 : UMG3Nx2
5T
5C
5TC
SAVE
Q8
DTA114EE
5R
5RC
IC1
XC61CC5002NR
Q29
SSM3K15TE(F)
INT
BASEBAND CIRCUIT
MIC I
MIC O
R170
LSDO
MIC MUTE
MMUTE
Q30
2SJ243
Q31,32
2SC4649(N,P)x2
AQSFT
X2
3.6864MHz
HSDO
AUDIO PROCESSOR
IC13
AQUA-L
IC12 (B/2)
TK62012F
TX SUM AMP
TX
AF SW
IC10 (A/2)
TK62012F
DET AMP
IC14
TC7W53FK(F)
IC11
TK62012FK
MUTE SW
DETAF
Q14
SSM3K15TE(F)
LSD FILTER
LSDIN
AFDET
AFDIO
AFDIR
DTRLOAD
VOXMUTE
AFSTD
SCLK
BB RDF/FD
TCLK/DTRDO
DC SW
Q19
SSM3K15TE(F)
VOXIN
Q33
2SJ347F
HSD MUTE
STSW

LEVEL DIAGRAM

Receiver Section

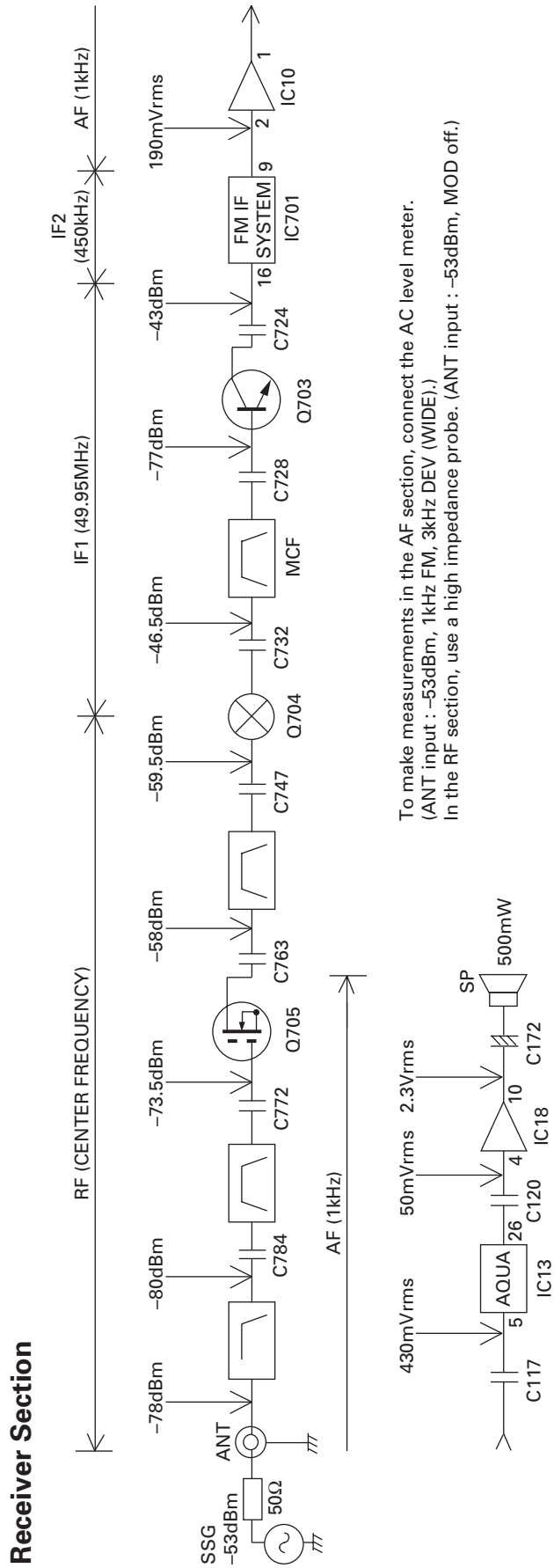

To make measurements in the AF section, connect the AC level meter.
(ANT input : –53dBm, 1kHz FM, 3kHz DEV (WIDE).)
In the RF section, use a high impedance probe. (ANT input : –53dBm, MOD off.)

Transmitter Section

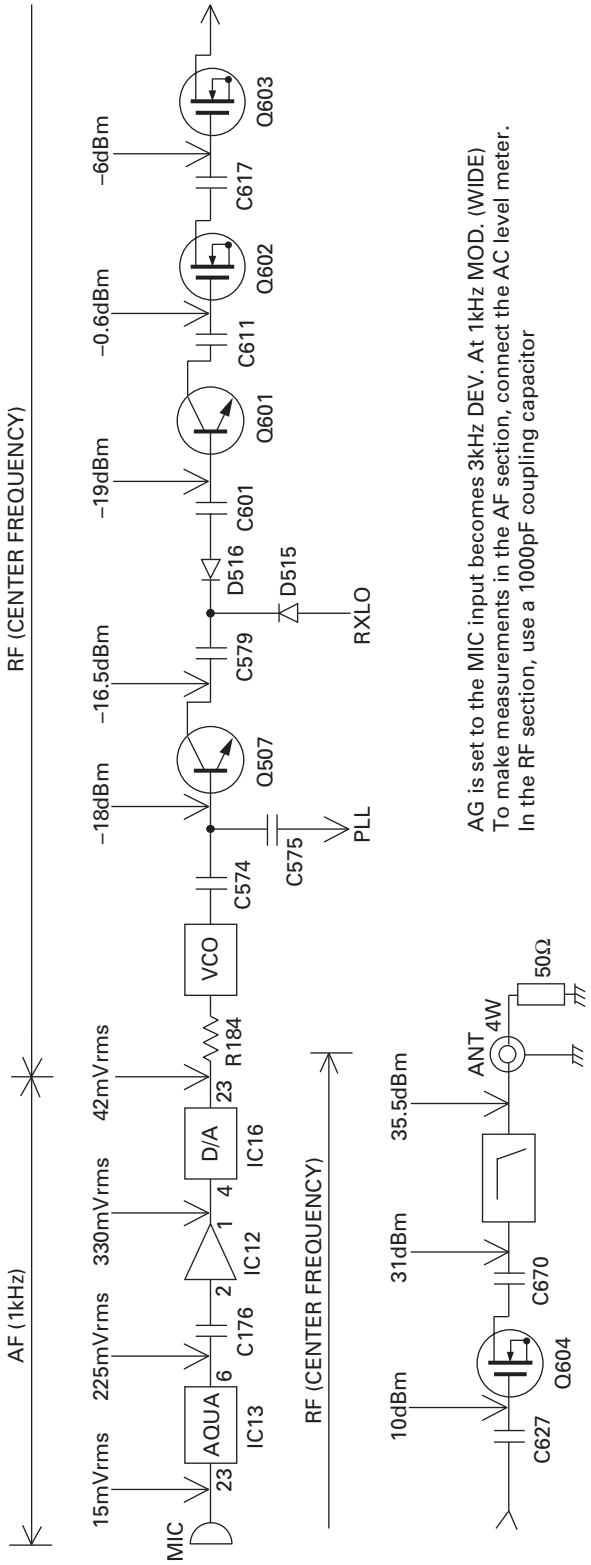

AG is set to the MIC input becomes 3kHz DEV. At 1kHz MOD. (WIDE)
To make measurements in the AF section, connect the AC level meter.
In the RF section, use a 1000pF coupling capacitor

KSC-30 (RAPID CHARGER)

External View

Operating Flow Chart

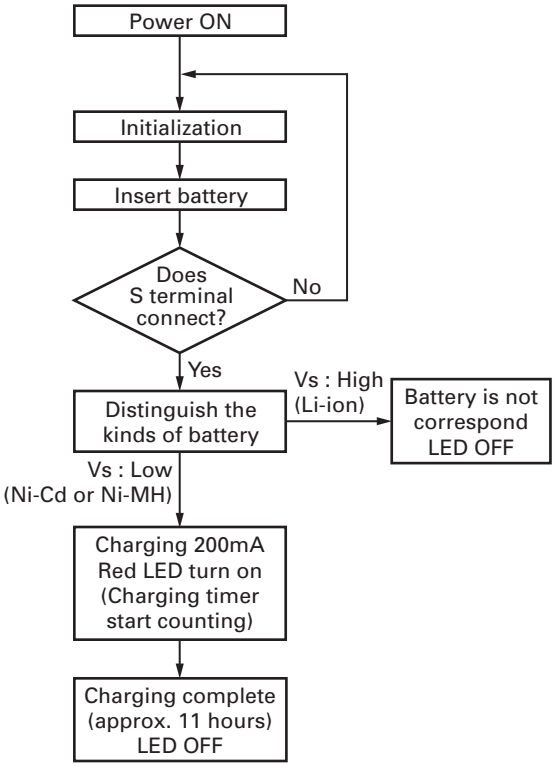

Parts List

Ref. No.	New parts	Parts No.	Description	Destination
		A02-3656-08	Cabinet Bottom	
		A02-3841-08	Cabinet Upper	
		B43-1151-08	Badge	
		B62-1754-08	Instruction manual	K,T
		B62-1755-08	Instruction manual	E
		B72-2209-08	Model name plate	
		E03-0453-08	DC jack	
		E23-1190-08	Relay terminal	
		G13-1547-08	Cushion	
		N83-2610-45	Pan head taptite screw	
		W02-3671-08	Electric circuit module	
		W08-0479-05	AC adapter 120V AC 60Hz	K
		W08-0513-05	AC adapter 230V AC 50Hz	T
		W08-0558-15	AC adapter 230V AC 50Hz	E

Schematic Diagram

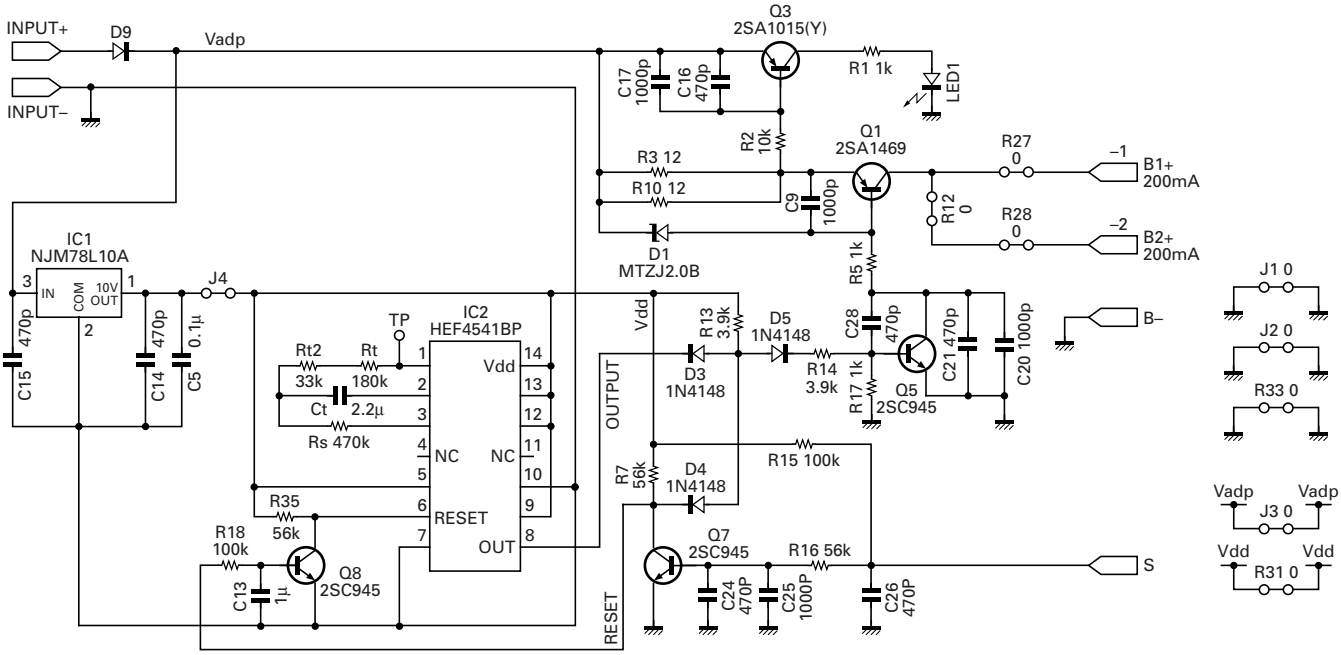

TK-3170/3173

SPECIFICATIONS

GENERAL

Frequency range ..... 450~490MHz (K,K4) 440~480MHz (M) 400~430MHz (K3,K6,M3)
Number of channels ..... Zone : Max. 128 per radio Conv. Ch : Max. 128 per zone
TK-3173 : Trunking GID : Max. 250 per zone
Channel spacing ..... Wide : 25kHz Narrow : 12.5kHz
Battery voltage ..... 7.5V DC ±20%
Battery life (5-5-90 duty cycle)/Approx. hours
KNB-24L (1400mAh) 9
KNB-25A (1200mAh) 8
KNB-26N (2000mAh) 12
KNB-35L (1950mAh) 11
Operating temperature range ..... –22°F~+140°F (–30°C~+60°C)
Frequency stability ..... ±0.00025% (–22°F~+140°F)
Antenna impedance 50Ω
Channel frequency spread 40MHz (K,K4,M) 30MHz (K3,K6,M3)
Dimensions (W x H x D) ..... 2-7/32 x 4-9/32 x 1-1/4 in. (56 x 109 x 31.7 mm) with KNB-24L or 35L battery
(Projections not included) 2-7/32 x 4-9/32 x 1-1/2 in. (56 x 109 x 37.9 mm) with KNB-25A or 26N battery
Weight (net) ..... 12.0 oz. (340 g) with battery (KNB-35L), antenna (KRA-23) and beltclip (KBH-12)

RECEIVER (Measurements made per EIA/TIA-603)

Sensitivity (12dB SINAD) ..... Wide : 0.25μV Narrow : 0.28μV
Selectivity ..... Wide : 70dB Narrow : 65dB
Intermodulation distortion ..... Wide : 65dB Narrow : 60dB
Spurious response 65dB
Audio output (8Ω impedance) ..... 500mW with less than 10% distortion

TRANSMITTER (Measurements made per EIA/TIA-603)

RF power output ..... HI : 4W LO : 1W
Spurious response 70dB
Modulation ..... Wide : 16K0F3E Narrow : 11K0F3E
FM hum & noise ..... Wide : 45dB Narrow : 43dB
Audio distortion ..... W/N : Less than 5%

Kenwood Corporation
2967-3, Ishikawa-machi, Hachioji-shi, Tokyo, 192-8525 Japan

Kenwood U.S.A. Corporation
P.O. BOX 22745, 2201 East Dominguez Street, Long Beach, CA 90801-5745, U.S.A.

Kenwood Electronics Canada Inc.
6070 Kestrel Road, Mississauga, Ontario, Canada L5T 1S8

Kenwood Electronics Deutschland GmbH
Rembrücker Str. 15, 63150 Heusenstamm, Germany

Kenwood Electronics Belgium N.V.
Leuvensesteenweg 248 J, 1800 Vilvoorde, Belgium

Kenwood Electronics France S.A.
13, Boulevard Ney, 75018 Paris, France

Kenwood Electronics UK Limited
KENWOOD House, Dwight Road, Watford, Herts., WD18 9EB United Kingdom

Kenwood Electronics Europe B.V.
Amsterdamseweg 37, 1422 AC Uithoorn, The Netherlands

Kenwood Electronics Italia S.p.A.
Via G. Sirtori, 7/9 20129 Milano, Italy

Kenwood Ibérica, S.A.
Bolivia, 239-08020 Barcelona, Spain

Kenwood Electronics Australia Pty. Ltd.
(A.C.N. 001 499 074)
16 Giffnock Avenue, Centrecourt Estate, North Ryde, N.S.W. 2113 Australia

Kenwood Electronics (Hong Kong) Ltd.
Unit 3712-3724, Level 37, Tower one Metroplaza, 223 Hing Fong Road, Kwai Fong, N.T., Hong Kong

Kenwood Electronics Singapore Pte Ltd
1 Ang Mo Kio Street 63, Singapore 569110

100%