VHF FM TRANSCEIVER

TK-7185

SERVICE MANUAL

KENWOOD

Kenwood Corporation

© 2008-8 PRINTED IN JAPAN
B51-8843-00 (N) 135

CONTENTS

GENERAL 2
SYSTEM SET-UP 4
REALIGNMENT 5
INSTALLATION 7
DISASSEMBLY FOR REPAIR 14
CIRCUIT DESCRIPTION 18
SEMICONDUCTOR DATA 22
COMPONENTS DESCRIPTION 24
PARTS LIST 26
EXPLODED VIEW 36
PACKING 37
ADJUSTMENT 38
TERMINAL FUNCTION 48
PC BOARD
DISPLAY UNIT (X54-3480-10) 52
TX-RX UNIT (X57-6982-72) (A/3, C/3) 54
TX-RX UNIT (X57-6982-72) (B/3) 56
SCHEMATIC DIAGRAM
DISPLAY UNIT (X54-3480-10) 60
TX-RX UNIT (X57-6982-72) 62
INTERCONNECTION DIAGRAM 71
BLOCK DIAGRAM 72
LEVEL DIAGRAM 74
OPTIONAL ACCESSORIES
KRK-10 (Control Head Remote Kit: 23ft/7m) 76
KAP-2 (Horn Alert/P.A. Relay unit) 81
KCT-46 (Ignition Sense Cable) 81
KMC-35 (Microphone) 81
KMC-36 (Keypad Microphone) 81
SPECIFICATIONS ..... BACK COVER

This product complies with the **RoHS** directive for the European market.

LF

This product uses Lead Free solder.

Document Copyrights

Copyright 2008 by Kenwood Corporation. All rights reserved.

No part of this manual may be reproduced, translated, distributed, or transmitted in any form or by any means, electronic, mechanical, photocopying, recording, or otherwise, for any purpose without the prior written permission of Kenwood.

Disclaimer

While every precaution has been taken in the preparation of this manual, Kenwood assumes no responsibility for errors or omissions. Neither is any liability assumed for damages resulting from the use of the information contained herein. Kenwood reserves the right to make changes to any products herein at any time for improvement purposes.

Firmware Copyrights

The title to and ownership of copyrights for firmware embedded in Kenwood product memories are reserved for Kenwood Corporation. Any modifying, reverse engineering, copy, reproducing or disclosing on an Internet website of the firmware is strictly prohibited without prior written consent of Kenwood Corporation. Furthermore, any reselling, assigning or transferring of the firmware is also strictly prohibited without embedding the firmware in Kenwood product memories.

GENERAL

INTRODUCTION

SCOPE OF THIS MANUAL

This manual is intended for use by experienced technicians familiar with similar types of commercial grade communications equipment. It contains all required service information for the equipment and is current as of this publication date. Changes which may occur after publication are covered by either Service Bulletins or Manual Revisions, which are issued as required.

ORDERING REPLACEMENT PARTS

When ordering replacement parts or equipment information, the full part identification number should be included. This applies to all parts : components, kits, and chassis. If the part number is not known, include the chassis or kit number of which it is a part and a sufficient description of the required component for proper identification.

PERSONAL SAFETY

The following precautions are recommended for personal safety :

- DO NOT transmit if someone is within two feet (0.6 meter) of the antenna.
- DO NOT transmit until all RF connectors are secure and any open connectors are properly terminated.
- SHUT OFF this equipment when near electrical blasting caps or while in an explosive atmosphere.
- All equipment should be properly grounded before power-up for safe operation.
- This equipment should be serviced by only qualified technicians.

GENERAL

PRE-INSTALLATION CONSIDERATIONS

1. UNPACKING

Unpack the radio from its shipping container and check for accessory items. If any item is missing, please contact KENWOOD immediately.

2. PRE-INSTALLATION CHECKOUT

2-1. Introduction

Each radio is adjusted and tested before shipment. However, it is recommended that receiver and transmitter operation be checked for proper operation before installation.

2-2. Testing

The radio should be tested complete with all cabling and accessories as they will be connected in the final installation. Transmitter frequency, deviation, and power output should be checked, as should receiver sensitivity, squelch operation, and audio output. Signaling equipment operation should be verified.

3. PLANNING THE INSTALLATION

3-1. General

Inspect the vehicle and determine how and where the radio antenna and accessories will be mounted.

Plan cable runs for protection against pinching or crushing wiring, and radio installation to prevent overheating.

3-2. Antenna

The favored location for an antenna is in the center of a large, flat conductive area, usually at the roof center. The trunk lid is preferred, bond the trunk lid and vehicle chassis using ground straps to ensure the lid is at chassis ground.

3-3. Radio

The universal mount bracket allows the radio to be mounted in a variety of ways. Be sure the mounting surface is adequate to support the radio's weight. Allow sufficient space around the radio for air cooling. Position the radio close enough to the vehicle operator to permit easy access to the controls when driving.

3-4. DC Power and wiring

1. This radio may be installed in negative ground electrical systems only. Reverse polarity will cause the cable fuse to blow. Check the vehicle ground polarity before installation to prevent wasted time and effort.
2. Connect the positive power lead directly to the vehicle battery positive terminal. Connecting the Positive lead to any other positive voltage source in the vehicle is not recommended.
3. Connect the ground lead directly to the battery negative terminal.
4. The cable provided with the radio is sufficient to handle the maximum radio current demand. If the cable must be extended, be sure the additional wire is sufficient for the current to be carried and length of the added lead.

4. INSTALLATION PLANNING – CONTROL STATIONS

4-1. Antenna system

Control station. The antenna system selection depends on many factors and is beyond the scope of this manual. Your KENWOOD dealer can help you select an antenna system that will best serve your particular needs.

4-2. Radio location

Select a convenient location for your control station radio which is as close as practical to the antenna cable entry point. Secondly, use your system's power supply (which supplies the voltage and current required for your system). Make sure sufficient air can flow around the radio and power supply to allow adequate cooling.

SERVICE

This radio is designed for easy servicing. Refer to the schematic diagrams, printed circuit board views, and alignment procedures contained in this manual.

NOTE

- If you do not intend to use the speaker 3.5-mm jack and the D-sub 25-pin connector, fit the supplied speaker-jack cap and D-sub cap to stop dust and sand from getting in.
- If the transceiver is turned ON or OFF when the power-on/off status message is enabled, the transceiver sends the status.

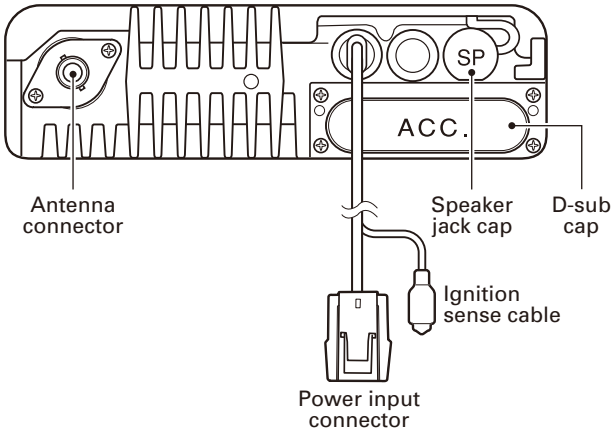

- You must use, KPG-96D version 3.20 or later for this transceiver. KPG-96D versions earlier than version 3.20 will not work properly.

SYSTEM SET-UP

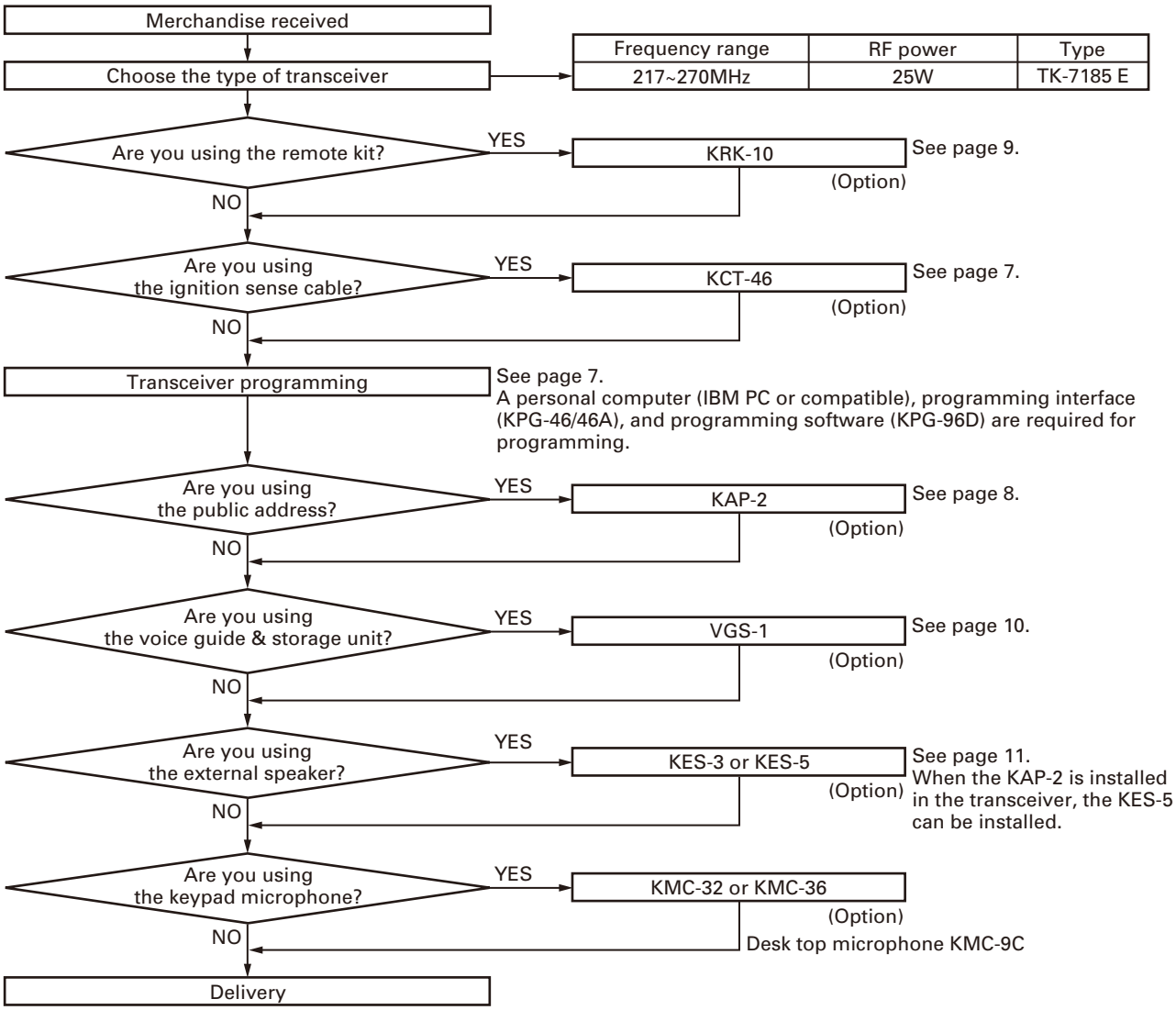

REALIGNMENT

1. Modes

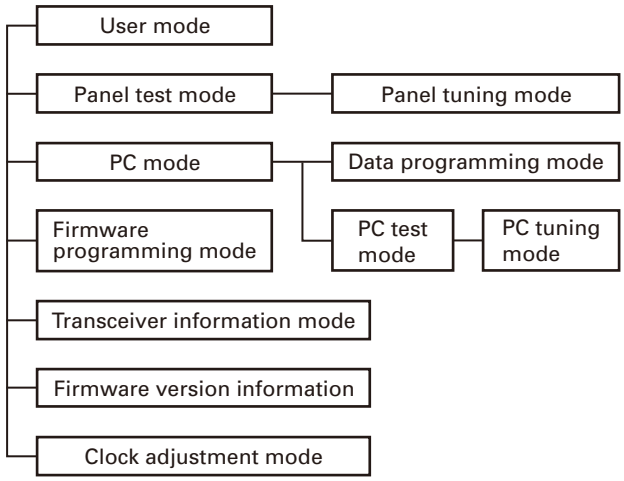

Mode	Function
User mode	For normal use.
Panel test mode	Used by the dealer to check the fundamental characteristics.
Panel tuning mode	Used by the dealer to tune the transceiver.
PC mode	Used for communication between the transceiver and PC (IBM compatible).
Data programming mode	Used to read and write frequency data and other features to and from the transceiver.
PC test mode	Used to check the transceiver using the PC. This feature is included in the FPU. See panel test.
PC tuning mode	Used to tune the transceiver using the PC. This feature is included in the FPU. See panel tuning.
Firmware programming mode	Used when changing the main program of the flash memory.
Transceiver information mode	Used to confirm the MPT ESN, firmware version and transceiver serial number.
Firmware version information	Used to confirm the internal firmware version.
Clock adjustment mode	Used by the dealer to adjust date and time.

2. How to Enter Each Mode

Mode	Operation
User mode	Power ON
Panel test mode	[A] + Power ON
PC mode	Received commands from PC
Panel tuning mode	[Panel test mode] + [S]
Firmware programming mode	[S] + Power ON
Transceiver information mode	[B] + Power ON
Firmware version information	[△] + Power ON
Clock adjustment mode	[C] + Power ON

3. Panel Test Mode

Setting method refer to ADJUSTMENT.

4. Panel Tuning Mode

Setting method refer to ADJUSTMENT.

5. PC Mode

5-1. Preface

The transceiver is programmed by using a personal computer, programming interface (KPG-46/46A), USB adapter (KCT-53U) and programming software (KPG-96D).

The programming software can be used with a PC or compatible. Figure 1 shows the setup of a PC for programming.

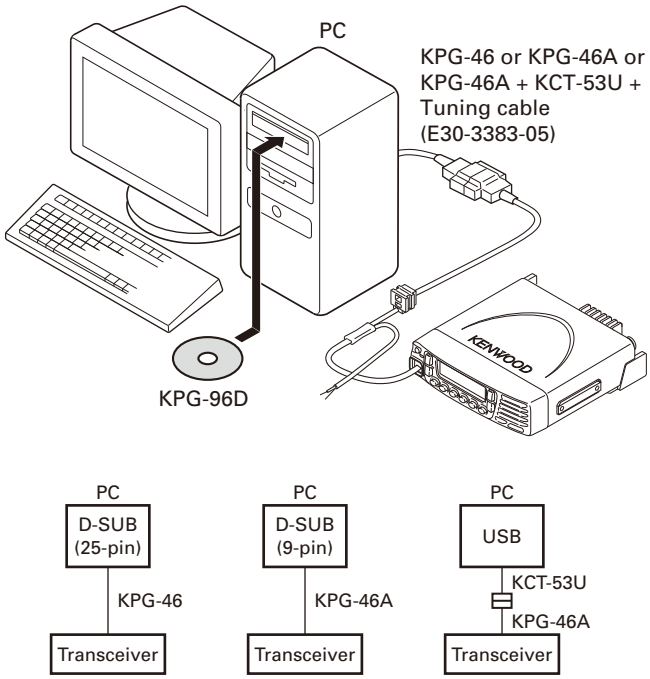

Fig. 1

5-2. Connection procedure

1. Connect the transceiver to the computer using the interface cable and USB adapter (When the interface cable is KPG-46A, the KCT-53U can be used.).

Notes:

- You must install the KCT-53U driver in the computer to use the USB adapter (KCT-53U).
- When using the USB adapter (KCT-53U) for the first time, plug the KCT-53U into a USB port on the computer with the computer power ON.

REALIGNMENT

2. When the POWER switch on, user mode can be entered immediately. When PC sends command the transceiver enter PC mode, and "PROGRAM" is displayed on the LCD.
   When data transmitting from transceiver, the red LED is lights.
   When data receiving to transceiver, the green LED is lights.

Note:
The data stored in the computer must match the "Model Name" when it is written into the flash memory.

5-3. KPG-46/KPG-46A description (PC programming interface cable: Option)

The KPG-46/46A is required to interface the transceiver to the computer. It has a circuit in its D-sub connector (KPG-46: 25-pin, KPG-46A: 9-pin) case that converts the RS-232C logic level to the TTL level.

The KPG-46/46A connects the 8-pin microphone connector of the transceiver to the RS-232C serial port of the computer.

5-4. KCT-53U description (USB adapter: Option)

The KCT-53U is a cable which connects the KPG-46A to a USB port on a computer.

When using the KCT-53U, install the supplied CD-ROM (with driver software) in the computer. The KCT-53U driver runs under Windows 2000 or XP.

5-5. Programming software KPG-96D description

The KPG-96D is the programming software for the transceiver supplied on a CD-ROM. This software runs under MS-Windows 98, Me, Windows 2000, XP or Vista (32-bit) on an IBM-PC or compatible machine.

The data can be input to or read from the transceiver and edited on the screen. The programmed or edited data can be printed out. It is also possible to tune the transceiver.

6. Firmware Programming Mode

6-1. Preface

Flash memory is mounted on the transceiver. This allows the transceiver to be upgraded when new features are released in the future. (For details on how to obtain the firmware, contact Customer Service.)

6-2. Connection procedure

Connect the transceiver to the personal computer (IBM PC or compatible) using the interface cable (KPG-46/46A) and USB adapter (KCT-53U: when the interface cable is KPG-46A, the KCT-53U can be used.). (Connection is the same as in the PC Mode.)

Note:
You can only program firmware from the 8-pin microphone connector on the front panel. Using the 25-pin logic interface on the rear panel will not work.

6-3. Programming

1. Start up the firmware programming software (Fpro.exe (ver. 4.02 or later)). The Fpro.exe exists in the KPG-96D installed holder.
2. Set the communications speed (normally, 115200 bps) and communications port in the configuration item.
3. Set the firmware to be updated by File name item.
4. Turn the transceiver power ON with the [S] key held down. Then, the orange LED on the transceiver lights and "PROG 115200" is displayed.
5. Check the connection between the transceiver and the personal computer, and make sure that the transceiver is in the Program mode.
6. Press write button in the window. When the transceiver starts to receive data, the [PG] display is blinking.
7. If writing ends successfully, the checksum is calculated and a result is displayed.
8. If you want to continue programming other transceivers, repeat steps 4 to 7.

Note:
This mode cannot be entered if the Firmware Programming mode is set to Disable in the Programming software.

6-4. Function

1. If you press the [■] key while "PROG 115200" is displayed, the display changes to "PROG 19200" (The LED blinks green) to indicate that the write speed is low speed (19200 bps). If you press the [■] key again while "PROG 19200" is displayed, the display changes to "PROG 38400" (The LED lights red and orange alternatively). If you press the [■] key again while "PROG 38400" is displayed, the display changes to "PROG 57600" (The LED blinks orange). If you press the [■] key again while "PROG 57600" is displayed, the display returns to "PROG 115200" (The LED lights orange).
2. If you press the [⌃] key while "PROG 115200" is displayed, the checksum is calculated, and a result is displayed. If you press the [⌃] key again while the checksum is displayed, "PROG 115200" is redisplayed.

Note:
Normally, write in the high-speed mode.

7. Transceiver Information Mode

Use this function to comfirm the MPT ESN, firmware version and transceiver serial number.

1. Press and hold the [B] key while turning the transceiver power ON.
2. Use the [⌃] and [⌄] keys to select the confirmation items.
3. To exit the transceiver information mode, turn the transceiver power OFF.

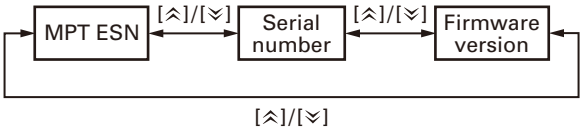

REALIGNMENT

8. Firmware Version Information

Press and hold the [⌂] key while turning the transceiver power ON and then keep pressing and holding the [⌂] key, the firmware version information appears on the LCD.

9. Clock Adjustment Mode

9-1. Flow chart of operation

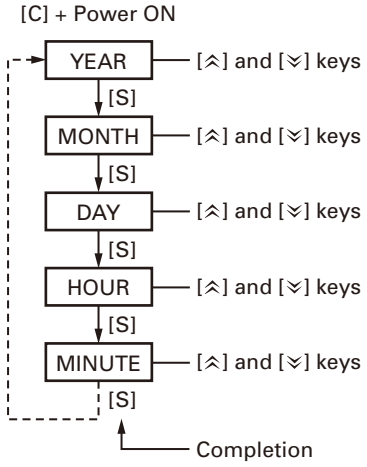

INSTALLATION

1. Ignition Sense Cable (KCT-46: Option)

The KCT-46 is an optional cable for enabling the ignition function. The ignition function lets you turn the power to the transceiver on and off with the car ignition key.

1-1. Connecting the KCT-46 cable to the transceiver

1. Open the KCT-46 fuse holder and insert a mini blade fuse (3A). (①)
2. While holding a clear protective cover, remove the black cap at the end of the yellow cable (ignition sense cable) of the transceiver. (②)
3. Connect the plug of the KCT-46 to the yellow cable terminal of the transceiver. (③)
4. Connect the other end of the KCT-46 to the ignition line of the car. (④)

Note: You must setup using the KPG-96D.

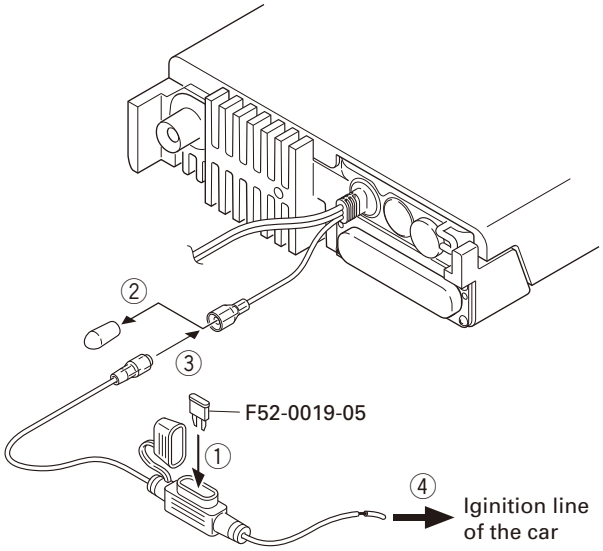

Fig. 1

INSTALLATION

2. Horn Alert/P.A. Relay Unit (KAP-2: Option)

The Horn alert (max. 2A drive), Public address and External speaker function are enabled by installing the KAP-2 in the transceiver.

2-1. Installing the KAP-2 unit in the transceiver (The kit A is not used in the KAP-2 accessories)

1. Remove the cabinet, top packing and shielding plate of the transceiver.
2. Set the KAP-2 relay unit jumper pins according to the purpose of use.
3. Remove the 6-pin jumper connector inserted in the TX-RX unit (B/3) connector (CN428). (①)
4. Insert one side of the lead wire with connector (E37-1114-05) into the relay unit connector (CN3) (②) and the other side into the TX-RX unit (B/3) connector (CN428) (③).
5. Place the relay unit at the position shown in Figure 2-2 and secure it to the chassis with a screw.
6. Remove the cap on the rear of the chassis by pushing it from the inside with your finger. (④)
7. Pass the 6-pin connector of the cable (E37-1113-15) through the chassis hole (⑤) and insert the bush into the chassis hole.
8. Rotate the bush of the cable 90 degrees counterclockwise as viewed from the rear of the chassis. (⑥)
9. Insert the 6-pin connector of the cable into the connector (CN2) of the KAP-2 relay unit. (⑦)

Note: You must setup using the KPG-96D.

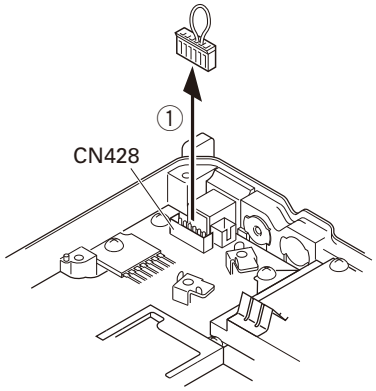

Fig. 2-1

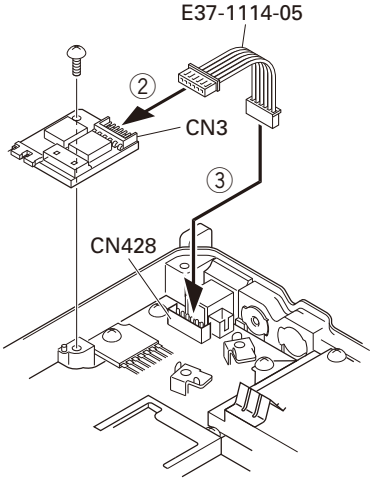

Fig. 2-2

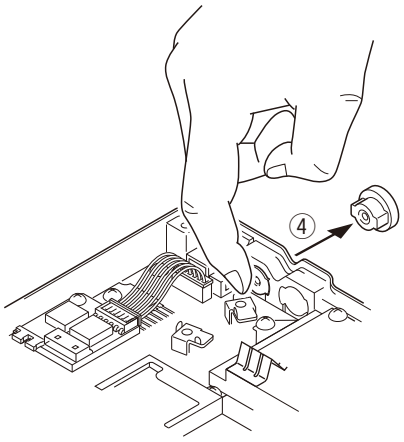

Fig. 2-3

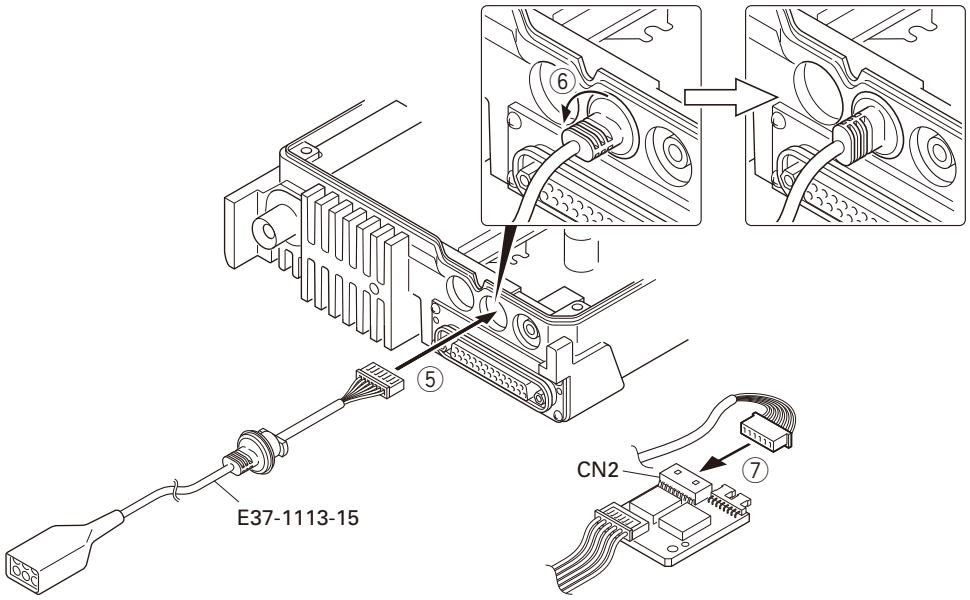

Fig. 2-4

INSTALLATION

3. Control Head Remote Kit (KRK-10: Option)

The KRK-10 remote kit is used to remotely operate the transceiver.

3-1. Installing the KRK-10 kit to the transceiver

1. Remove the front panel from the transceiver.
2. Install the KRK-10 main panel onto the transceiver.
3. Install the KRK-10 rear panel onto the front panel.
4. Connect the KRK-10 main panel to the rear panel with the cable.

■ Remove the front panel from the transceiver

1. Lift the two tabs of the panel on the bottom of the transceiver with a flat-head screwdriver (①) and remove the panel from the chassis (②).
   Note: Confirm that the tabs of the speaker hardware fixture and holder is securely fitted in the front panel.
2. Remove the flat cable from the connector (CN902) of the display unit of the panel. (③)
3. Fold the black line of the flat cable (in three parts) as shown in Figure 3-2. (④, ⑤, ⑥)

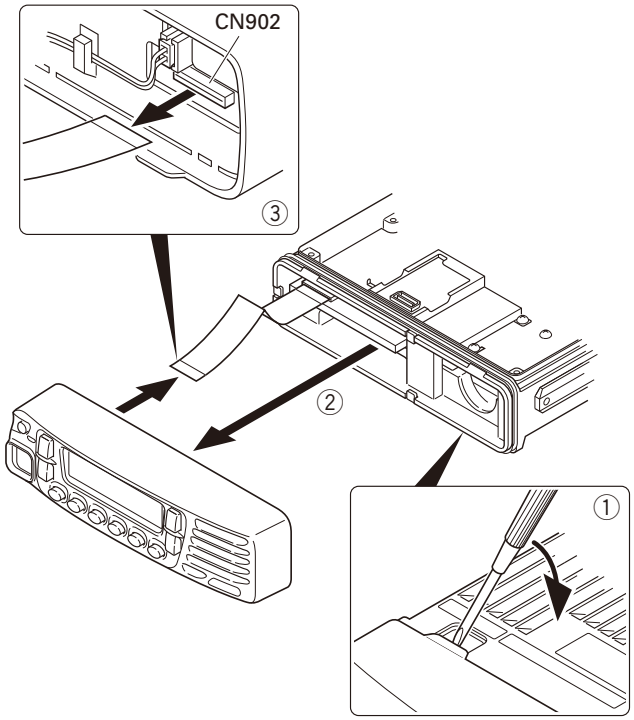

Fig. 3-1

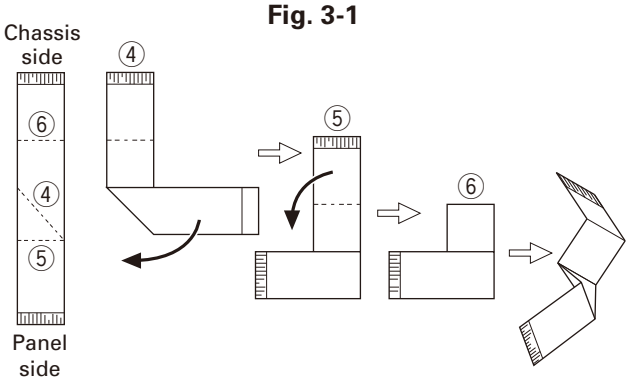

Fig. 3-2

■ Install the KRK-10 main panel onto the transceiver

4. Insert the flat cable that was removed in step 2 above into the connector (CN1) of the interface unit (A/2) of the KRK-10 main panel (A62-1101-11). (⑦)
   Note: The terminal side of the flat cable must face down when inserting the flat cable into the connector.
5. Fit the main panel with four tabs onto the front of the chassis. (⑧)
   Note: When installing the main panel onto the front of the chassis, hold down the flat cable with your fingers to prevent it from being caught.

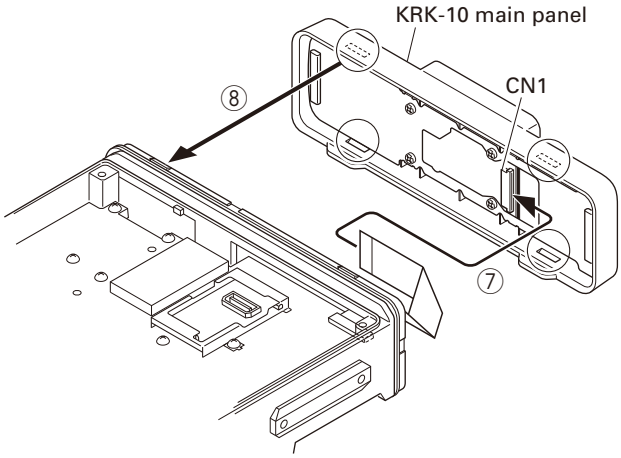

Fig. 3-3

■ Install the KRK-10 rear panel onto the front panel

6. Insert the flat cable attached to the interface unit (B/2) of the KRK-10 rear panel (A82-0056-21) into the connector (CN902) of the display unit of the panel (⑨). (The flat cable has been pre-inserted in the connector (CN2) of the rear panel at the time of shipping.)
   Note: The terminal side of the flat cable must face down when inserting the flat cable into the connector.
7. Fit the four tabs of the rear panel into the front panel. (⑩)

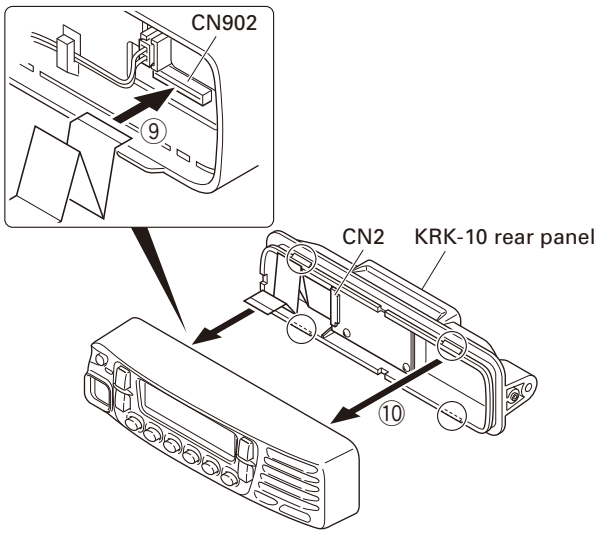

Fig. 3-4

INSTALLATION

■ **Connect the KRK-10 main panel to the rear panel with the cable**

8. Insert one 14-pin connector of the cable (E30-7514-15) into the connector (CN3) of the interface unit (A/2) of the main panel. (⑪)
   Note: Insert the connector that has a sticker onto the cable to the connector of the main panel.
9. Secure the cable bush on the main panel and fit the waterproof packing (orange) (⑫) securely over top.
10. Install the molded cover (⑬) over the connector on the main panel and secure it with two screws (⑭).
11. Insert the other 14-pin connector of the cable into the connector (CN4) of the interface unit (B/2) of the rear panel. (⑮)
12. Secure the cable bush on the rear panel and fit the waterproof packing (orange) (⑯) securely over top.
13. Install the molded cover (⑰) over the connector on the rear panel and secure it with two screws (⑱).

Note: A cable can be connected from the left side as shown in the Figure 3-5 or from right side.
However, the 14-pin connector must be connected to correct direction.

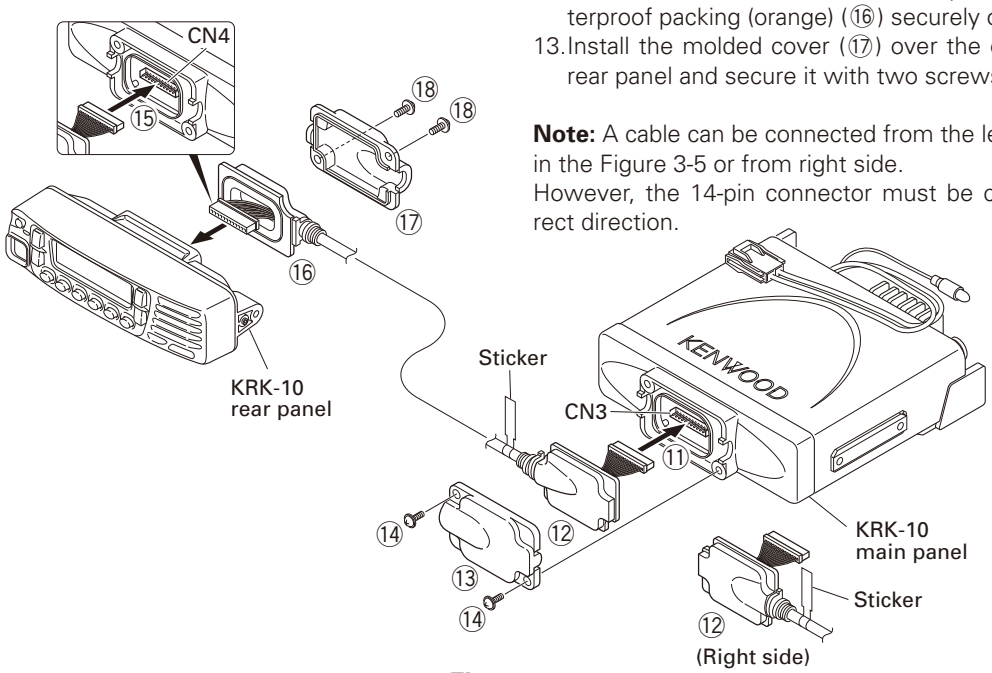

Fig. 3-5

4. Voice Guide & Storage Unit (VGS-1: Option)

Note: Because the VGS-1 is a non-RoHS product, it is not sold in the European market.

4-1. Installing the VGS-1 unit in the transceiver

1. Remove the cabinet, top packing and shielding plate of the transceiver.
2. Attach two cushions to VGS-1 as shown in Figure 4. (①)
   Note: Be sure not to cover the connector with the bottom cushion.
3. Insert the VGS-1 connector (CN1) into the TX-RX unit (B/3) connector (CN403). (②)

Note: You must setup using the KPG-96D.

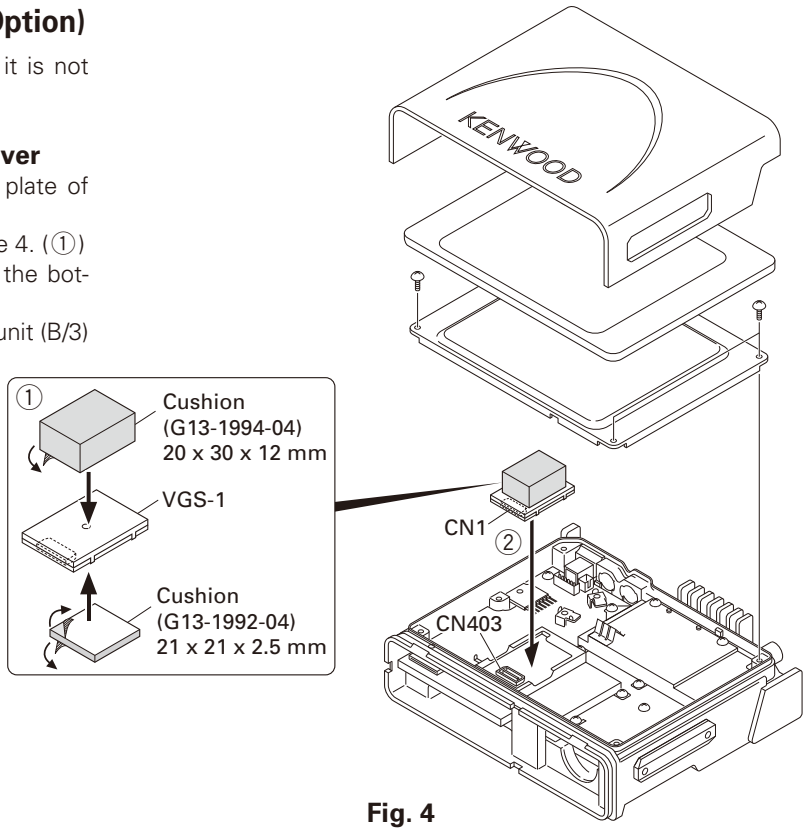

Fig. 4

INSTALLATION

5. External Speaker (Option)

5-1. KES-3

The KES-3 is an external speaker for the 3.5-mm-diameter speaker jack.

■ Connection Procedure

1. Connect the KES-3 to the 3.5-mm-diameter speaker jack on the rear of the transceiver.

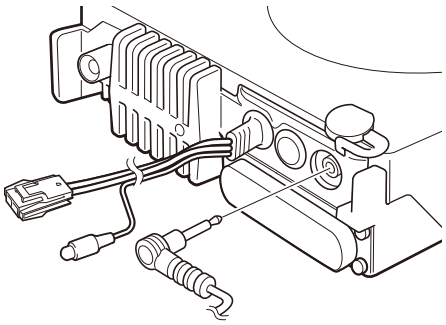

Fig. 5-1

5-2. KES-5

External speaker KES-5 can be installed for KAP-2. If KES-5 is installed, it can be set by changing the CN1 short pin from pins 4 and 5 to pins 5 and 6 on the KAP-2.

KAP-2 CN1 Connect	Set Up
4-5	INT. SP or KES-3
5-6	KES-5

When you use the KES-5, plug the short pin to pins 5 and 6 on the KAP-2.

When you use the INT. SP or KES-3, plug the short pin to pins 4 and 5 on the KAP-2.

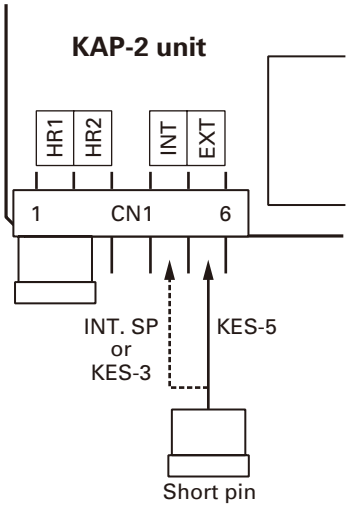

Fig. 5-2

■ Connection Procedure

Insert the crimp terminal into the Square plug supplied with the KAP-2.

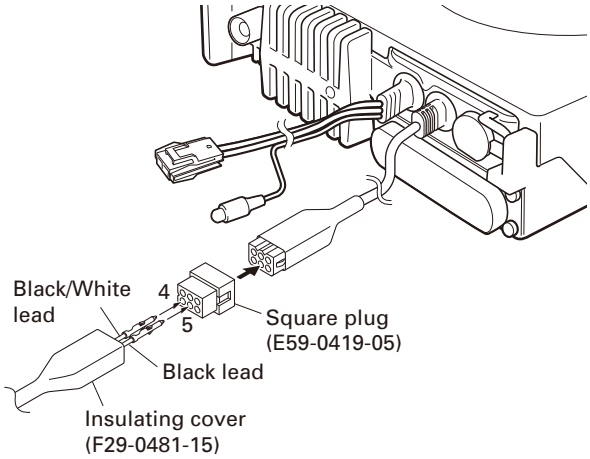

Fig. 5-3

■ KAP-2 Cable (E37-1113-15) 6-pin Connector

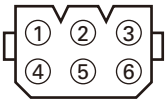

Pin No.	Color	Name
1	Red	HR2
2	Blue	GND
3	Yellow	OSP
4	Green	ESP
5	Brown	GND
6	Black	HR1

INSTALLATION

6. Voice Scrambler Board Connection

1. Remove the front panel from the transceiver.
2. Solder each lead of the scrambler board to a necessary location of each landing on the component side of the TX-RX unit (B/3).
3. Wrap the scrambler board in a cushion and install it on the front of the chassis as shown in Figure 6-2.

Note: You must setup using the KPG-96D.

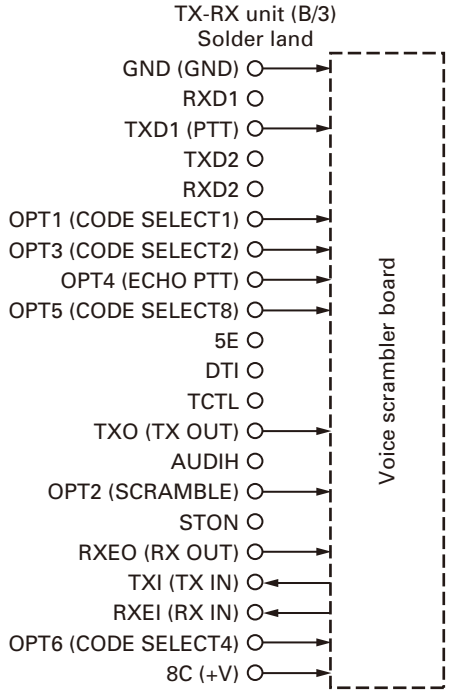

Fig. 6-1

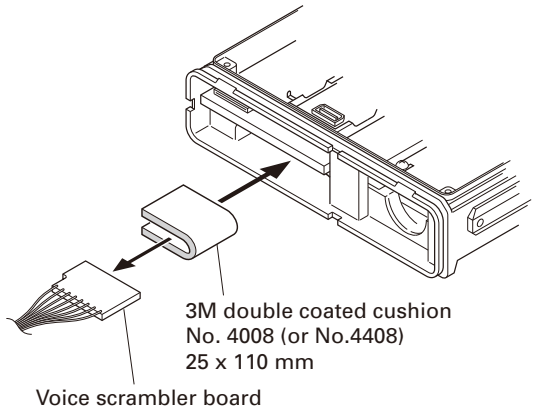

Fig. 6-2

7. GPS Receiver Connection

7-1. Installing the GPS receiver

1. Remove the cabinet, top packing and shielding plate of the transceiver.
2. Remove the front panel from the transceiver.
3. Attach two cushions to the top of the GPS receiver.
4. Attach the GPS receiver to the shield case with two cushions as shown in Figure 7-2.
5. Solder each lead of the GPS receiver to a necessary location of each landing on the component side of the TX-RX unit (B/3).
6. Place the GPS antenna cable in the hollow at the rear of the chassis. (Fig. 7-2 ①)
   Note: If the GPS receiver is installed, cut the base of the convex tab of the top packing with a pair of nippers, or similar tool. (Fig. 7-3 ②)
   If the convex tab of the top packing is cut off, the water proofing property is no longer guaranteed.

Note: You must setup using the KPG-96D.

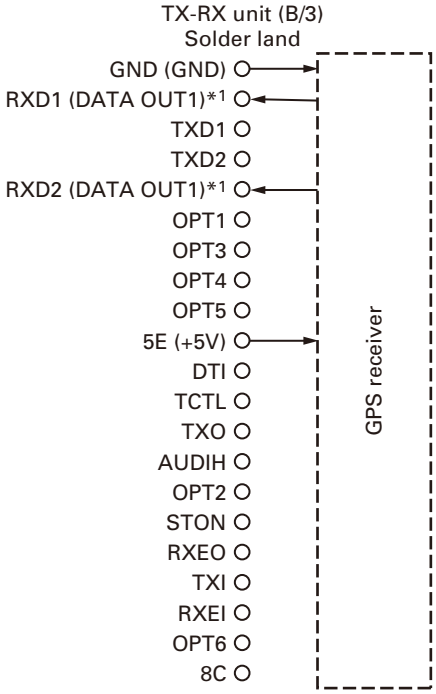

Fig. 7-1

*1: Depending on the connected optional accessory, the DATA OUT1 may connect to either RXD1 or RXD2.

INSTALLATION

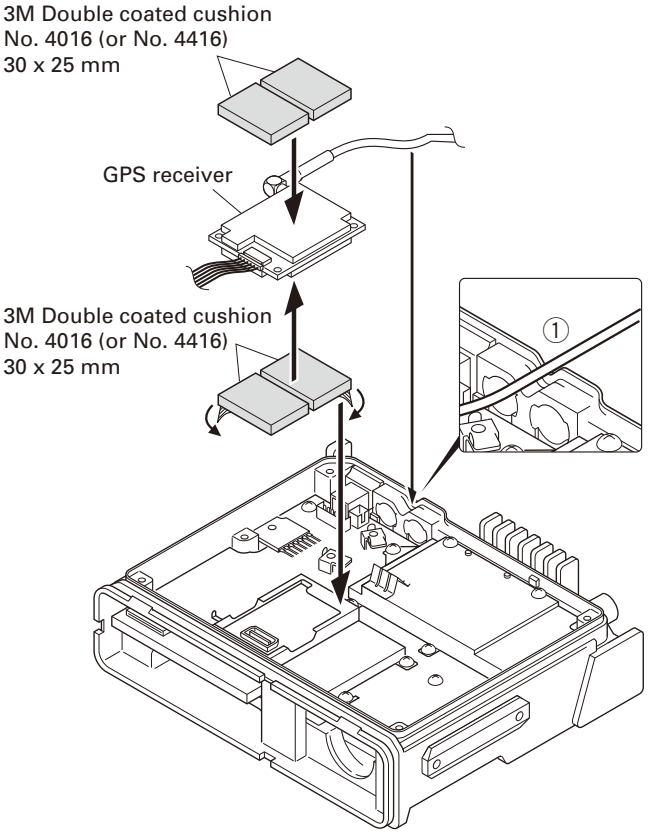

Fig. 7-2

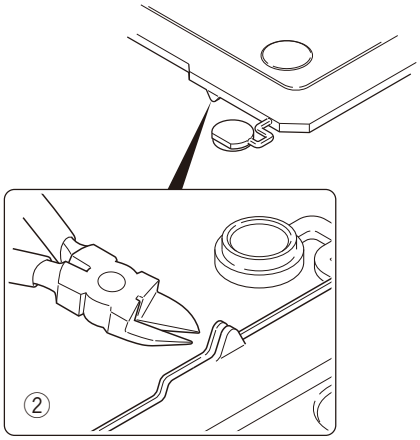

Fig. 7-3

7-2. Installing the GPS receiver together with the VGS-1

1. Remove the cabinet, top packing and shielding plate of the transceiver.
2. Remove the front panel from the transceiver.
3. Attach a cushion to the bottom of the VGS-1 as shown in Figure 7-5.
   Note: Be sure not to cover the connector with the cushion.
4. Insert the VGS-1 connector (CN1) into the TX-RX unit (B/3) connector (CN403).
5. Perform step 3 to 6 of "7-1. Installing the GPS receiver" described on page 12.

Note: You must setup using the KPG-96D.

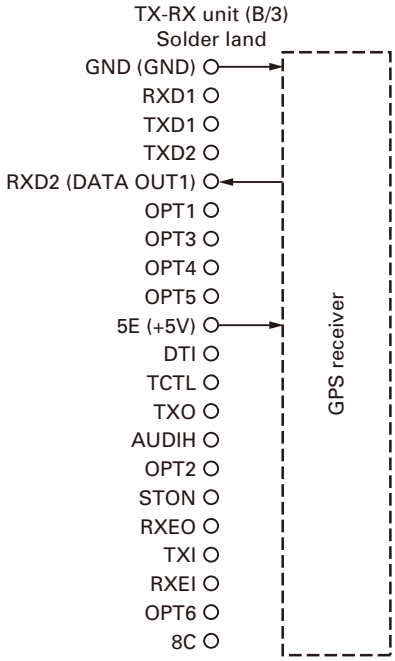

Fig. 7-4

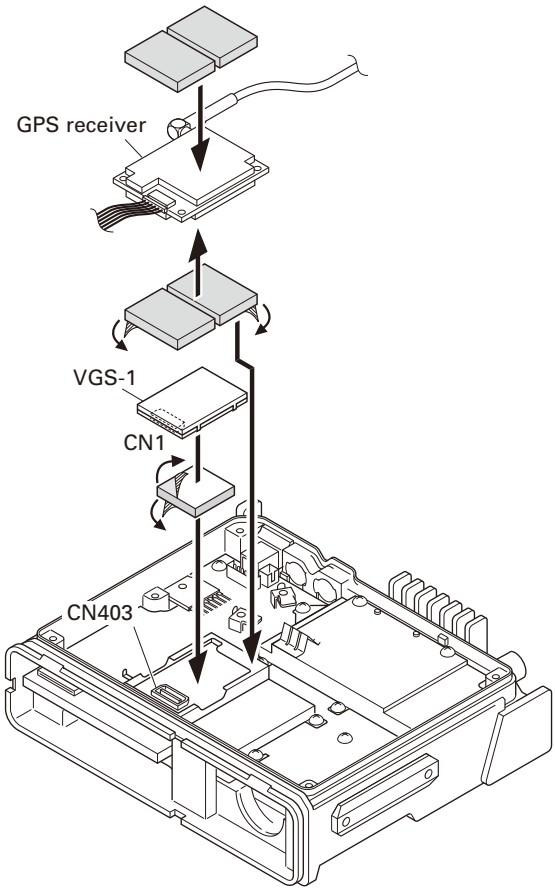

Fig. 7-5

DISASSEMBLY FOR REPAIR

1. Precautions on Disassembly

■ TX-RX PCB (TX-RX unit B/3) Disassembly

1. Remove all screws and antenna terminals on the TX-RX PCB.
2. Rotate the bush of the power supply cable 90 degrees counterclockwise as viewed from the rear of the chassis (①) and remove the power supply cable from the chassis (②).
3. When the speaker phone jack is pushed up, using your finger, from the rear of the chassis (③), the TX-RX PCB is removed from the chassis.
   Note: The TX-RX PCB and D-sub PCB (TX-RX unit A/3) are connected with a flat cable. Remove them carefully.
4. Turn the TX-RX PCB over and remove the flat cable from the connector (CN427). (④)
5. Remove the TX-RX PCB from the chassis.

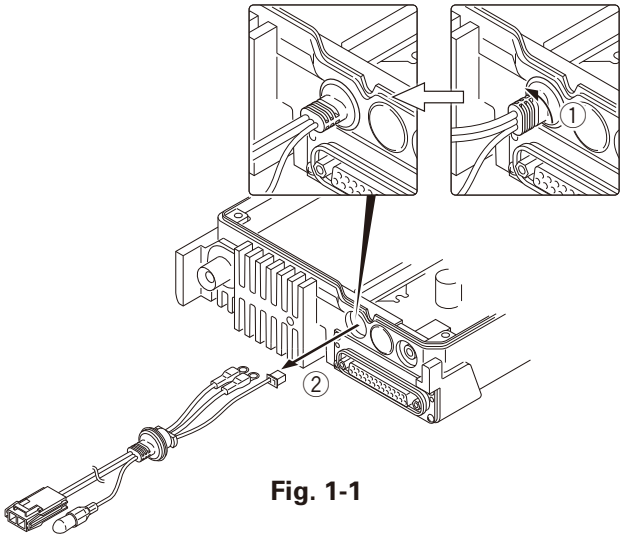

Fig. 1-1

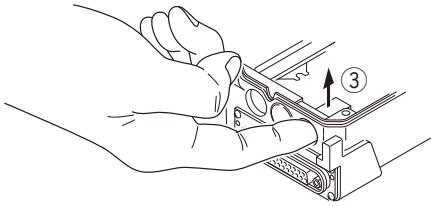

Fig. 1-2

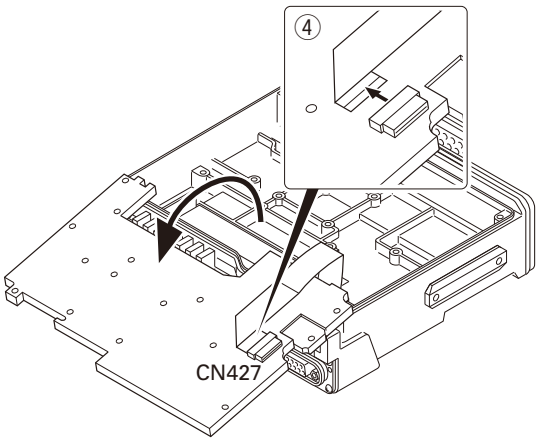

Fig. 1-3

■ Removing the speaker hardware fixture (J21-8481-03) and holder (J19-5485-12)

1. Remove the speaker lead from the holder hook. (①)
2. Remove the speaker connector from the display unit connector (CN901). (②)
3. When removing the speaker hardware fixture, insert a flat-head screwdriver at the position shown in Figure 2-1 and tilt it in the direction shown by the arrow. (③)
4. To remove the holder, insert a flat-head screwdriver into tab of the holder and tilt it in the direction shown by the arrow. (④)

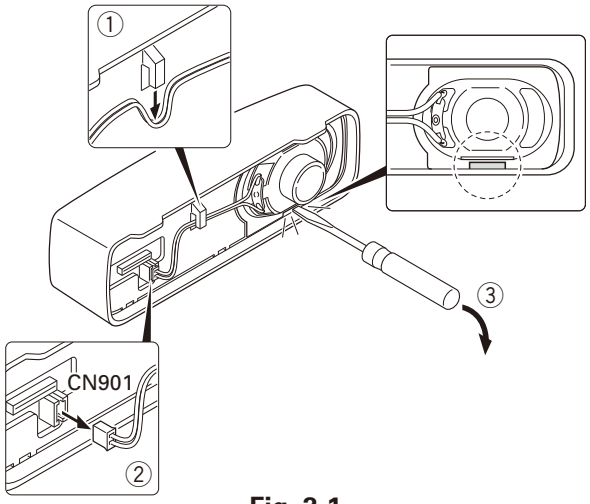

Fig. 2-1

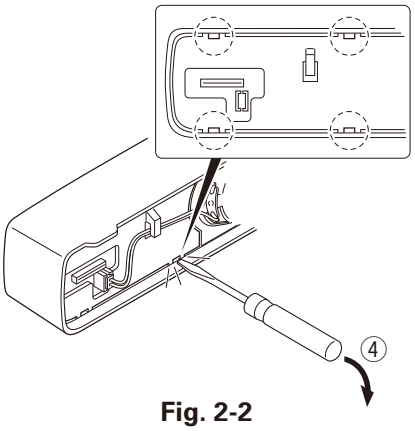

Fig. 2-2

DISASSEMBLY FOR REPAIR

2. Precautions on Reassembly

■ TX-RX PCB (TX-RX unit B/3) Reassembly

1. With the TX-RX PCB turned over, insert the flat cable from the D-sub PCB (TX-RX unit A/3) into the connector (CN427) on the TX-RX PCB.
2. Place the TX-RX PCB at its original position, tilt the TX-RX PCB and install the chassis as shown in Figure 3.

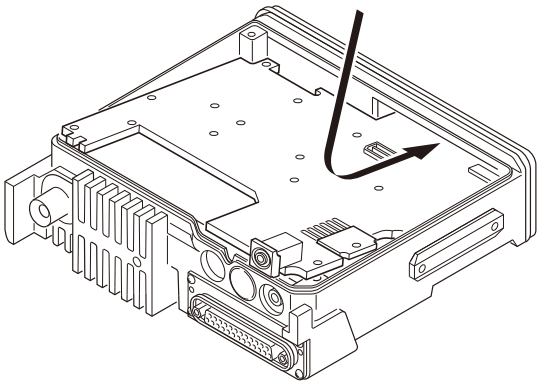

Fig. 3

■ FINAL shield case (F10-3032-14) installation procedure

1. Place the shield case on the final section of the TX-RX unit (B/3).
2. The shield case is installed on the positioning boss of the chassis by pushing down on "PUSH2" (on the shield case) while pushing "PUSH1" (stamped on two parts on the shield case) to the right.

■ Power supply cable installation procedure

1. Pass the power supply cable through the chassis hole (①) as shown in Figure 4-1 and insert the bush into the chassis hole.
2. Rotate the bush of the power supply cable 90 degrees clockwise as viewed from the rear of the chassis. (②)
3. Align the ignition sense connector (yellow) of the power supply cable around the chemical capacitor (C801) and connect it to the TX-RX unit (B/3) connector (CN804).
4. Align the + (positive) terminal of the power supply cable (red) as shown in Figure 4-2 and fix it to the terminal strip with a screw.
5. Align the – (negative) terminal of the power supply cable (black) as shown in Figure 4-2 and fix it to the terminal strip with a screw.

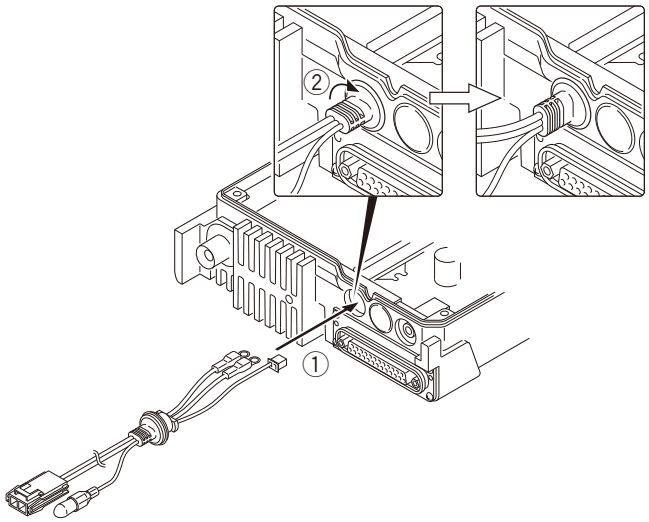

Fig. 4-1

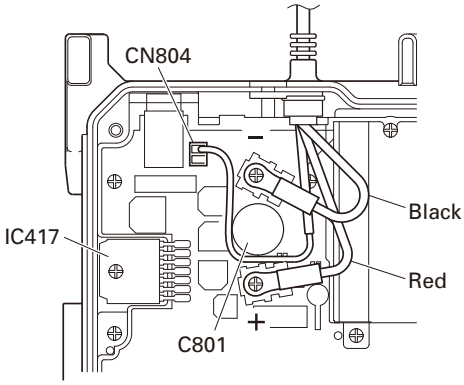

Fig. 4-2

■ Top packing installation procedure

1. Place the top packing over the shielding plate.
2. Fit the convex tab of the top packing into the hollow of the chassis. (①)
3. Fit the chassis into the groove of the top packing. (②) Verify that the top packing is in close contact with the chassis.

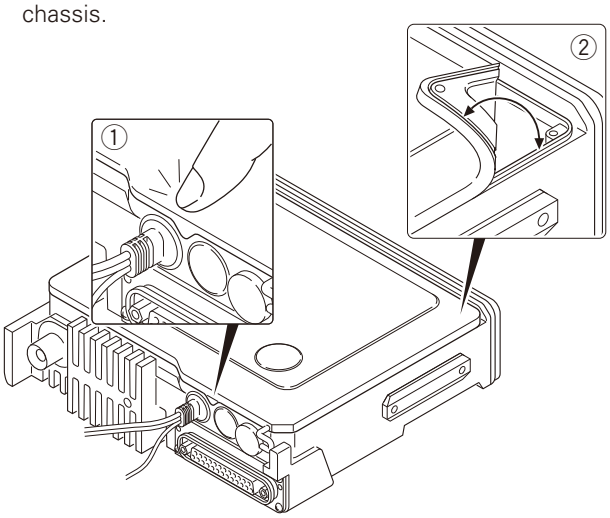

Fig. 5

DISASSEMBLY FOR REPAIR

■ D-sub cap installation procedure

To improve water resistance, fit the D-sub cap into the D-sub terminal hardware fixture of the transceiver in the following order:

1. Fit the left side (①) of the D-sub cap into the hardware fixture.
2. Fit the right side (②) of the D-sub cap into the hardware fixture.
3. Fit the center (③) of the D-sub cap into the hardware fixture.
   Verify that the D-sub cap is in close contact with the hardware fixture.

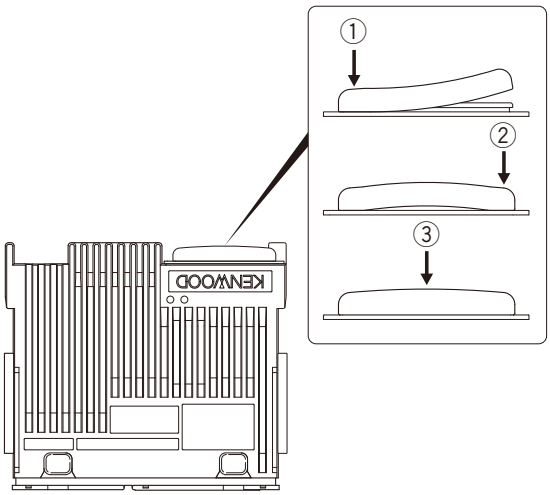

Fig. 6

■ Installing the holder (J19-5485-12) and speaker hardware fixture (J21-8481-03)

1. Insert two tabs of the holder (J19-5485-12) into the hollows in the top of the panel. (①)
2. Push the two tabs of the holder in on the opposite side of those in step 1 above and fit them into the hollow in the bottom of the panel. (②)
   Note: Push in the holder until it snaps in place.
3. Install the speaker holder onto the panel. (③)
   Note: To improve water resistance, fit the panel into the groove of the holder.
4. Place the speaker into the speaker holder.
   Note: The speaker must not ride on the holder rib.
5. Place the spacer on the speaker.
6. Insert the hardware fixture (J21-8481-03) into the hollow of the panel as shown in Figure 7-3, then push two parts of the hardware fixture and fit it into the hollow of the top of the panel. (Fig. 7-3 ④)
   Note: Push in the hardware fixture until it snaps in place.
7. Insert the speaker connector into the display unit connector (CN901).
8. Place the speaker lead on the holder hook.

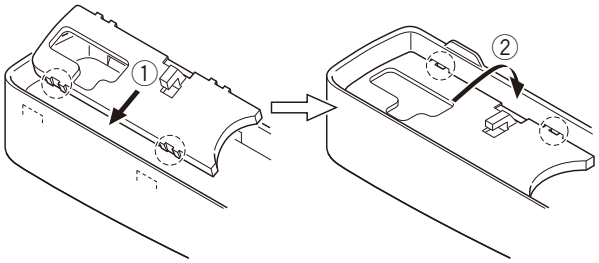

Fig. 7-1

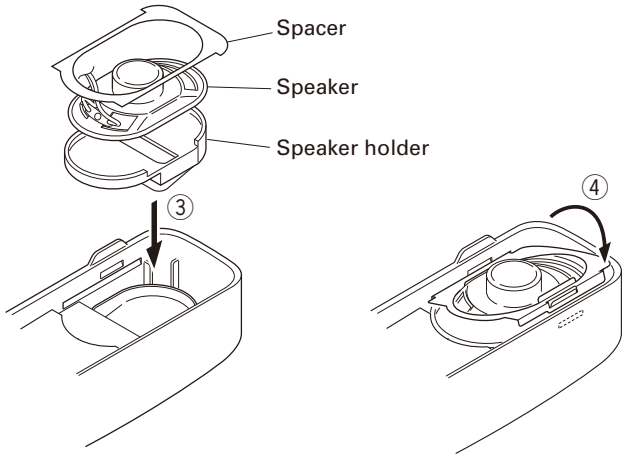

Fig. 7-2 **Fig. 7-3**

■ Packing (G53-1676-03) installation procedure

1. Fit the packing (G53-1676-03) in the groove of the chassis.
   Note: If the part of packing hangs out of the chassis groove, the waterproofing function cannot be assured. Reinsert the packing in the groove of the chassis as shown in figure after lifting the packing from the chassis groove.

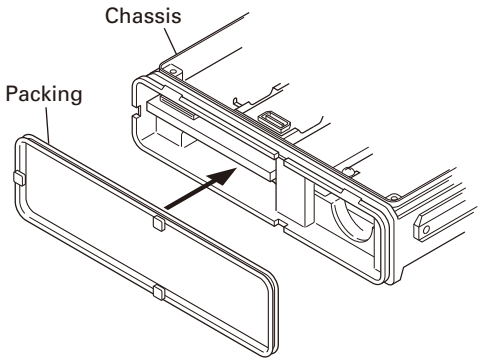

Fig. 8-1

DISASSEMBLY FOR REPAIR

2. Verify that the packing is securely fitted in the groove in the chassis.

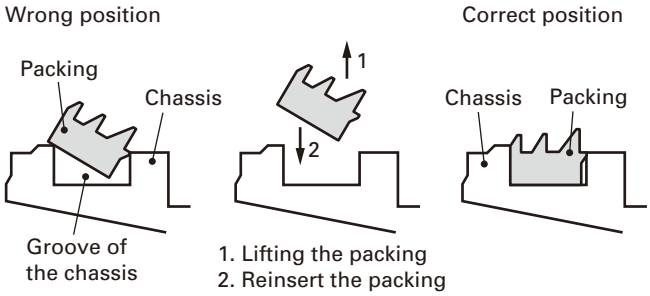

Fig. 8-2

■ Removing the lithium cell (W09-0971-05)

Insert a non-conductive screwdriver to groove of one side of the socket (CN401) and pry the lithium cell up from the socket.

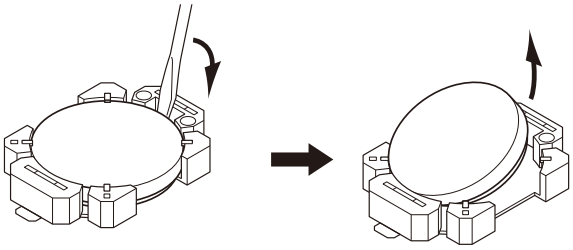

Fig. 9

■ Installing the lithium cell (W09-0971-05)

Insert a lithium cell into one side of the socket (CN401).

Push the lithium cell to insert the lithium cell into the socket.

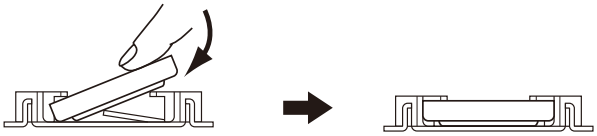

Fig. 10

CIRCUIT DESCRIPTION

1. Outline

The TK-7185 is a VHF/FM transceiver designed to operate in the frequency range of 217 to 270MHz.

The unit consists of receiver, transmitter, phase-locked loop (PLL) frequency synthesizer, and control circuits.

2. Receiver Circuit

The receiver is double conversion superheterodyne, designed to operate in the frequency range of 217MHz to 270MHz.

The receiver circuit consists of the following : 2-1 front-end circuit, 2-2 first mixer, 2-3 IF amplifier circuit, 2-4 audio amplifier circuit, and 2-5 squelch circuit.

2-1. Front-end Circuit

The front-end circuit consists of former BPF (D11), RF amplifier Q103, and latter BPF (D103, D104, D105 and D106). The BPF covers frequency ranges 217 to 270MHz.

The latter BPF (D103, D104, D105 and D106) attenuates the unwanted signals, and sends only the necessary signal to the first mixer.

2-2. First Mixer

The signal from the BPF is heterodyned with the first local oscillator signal from the PLL frequency synthesizer circuit at the first mixer DBM (IC171) to become a 44.85MHz first intermediate frequency (IF) signal. The first IF signal is fed through a monolithic crystal filter (XF171) to further remove spurious signals.

2-3. IF Amplifier

The first IF signal is amplified by Q171 and Q172, and then enters IC172 (FM system IC). The signal is heterodyned again with a second local oscillator signal (44.395MHz) with in IC172 to become a 455kHz second IF signal. The second IF signal is fed through a 455kHz ceramic filters (CF172; Wide, CF171; Narrow) to further eliminate unwanted signal, and the quadrature detection circuit FM-detects the signal to produce a base-band signal and output it from pin 9.

2-4. Audio Amplifier

The demodulated audio signal from IC172 goes to IC415 through the AF amplifier (IC412) and IC413. The audio signal goes to an electronic volume (IC410) and is amplified to drive a loudspeaker by an audio power amplifier (IC417). The audio output can be provided to external 4Ω speaker through the speaker jack output (J401) on the rear panel. Q419 is a mute switch.

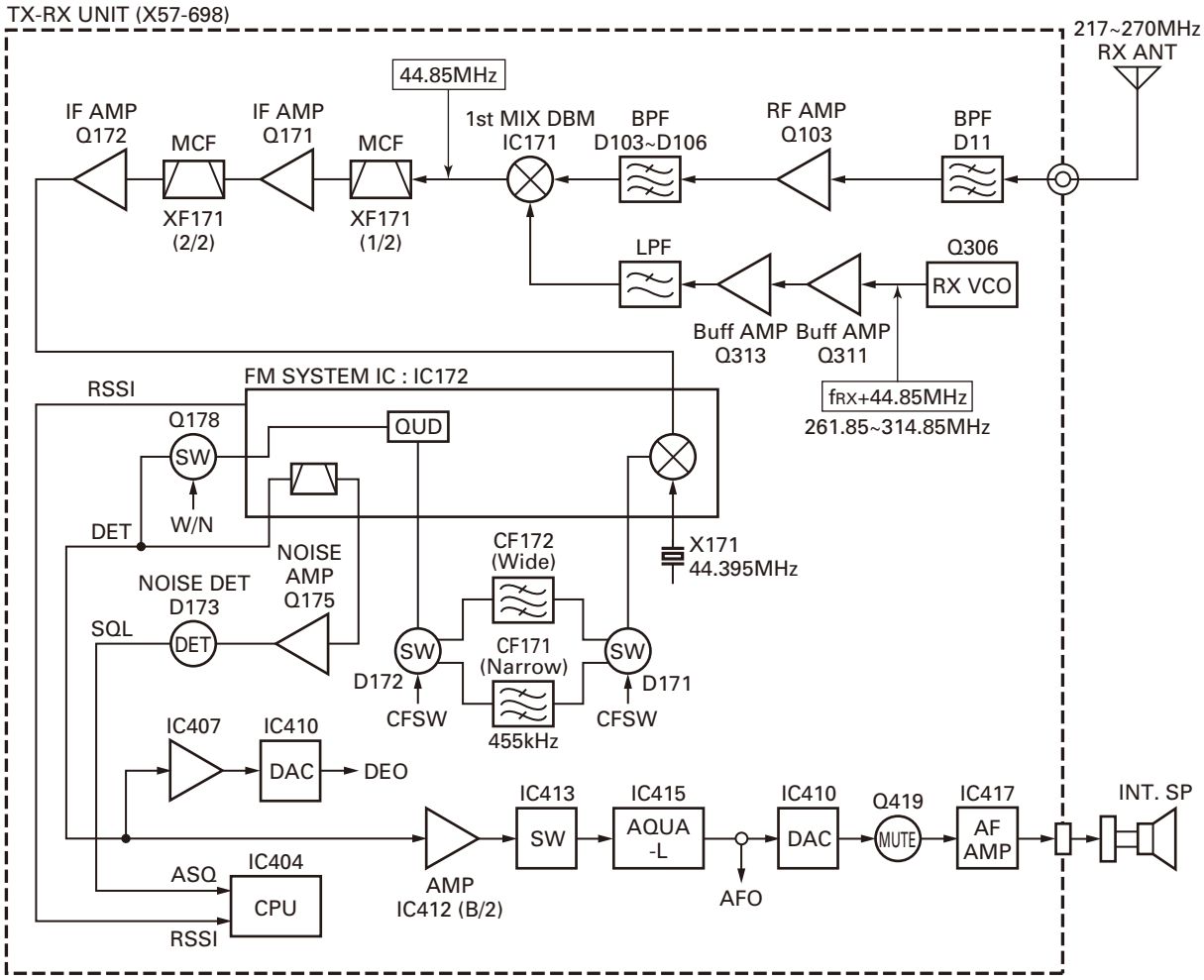

Fig. 1 Receiver circuit

CIRCUIT DESCRIPTION

2-5. Squelch Circuit

The output signal from IC172 enters FM IC again, then passed through a band-pass filter.

The noise component output from IC172 is amplified by Q175 and rectified by D173 to produce a DC Voltage corresponding to the noise level. The DC voltage is sent to the analog port of the CPU (IC404).

IC172 outputs a DC voltage (RSSI) corresponding to the input of the IF amplifier.

3. Transmitter Circuit

The transmitter circuit consists of the following circuits : 3-1 microphone circuit, 3-2 modulation level adjustment circuit, 3-3 drive and final power amplifier circuit, and 3-4 automatic power control circuit.

3-1. Microphone Circuit

The audio signal from the microphone goes into TX-RX unit (X57-698) from the display unit (X54-348) and passes through the mute switch (Q416). The audio signal is amplified by the microphone amplifier (IC414) and is input into the TXIN terminal of the audio processor (IC415) after passing through the multiplexer (IC413).

The input audio signal is output from the MOD terminal of the audio processor (IC415) and is amplified by the audio frequency amplifier (IC412) after passing through the electric volume (IC410).

3-2. Modulation Level Adjustment Circuit

The audio signal amplified by the audio frequency amplifier (IC412) is added to the low speed data LSD passed through the low pass filter (IC409). The combined signals is supplied to the VCO (voltage controlled oscillator) and the VCXO (voltage controlled crystal oscillator) X301, respectively.

3-3. Drive and Final Power Amplifier Circuit

The transmit signal obtained from the TX VCO buffer amplifier Q311, is amplified to approximately +17dBm by the driver amplifiers Q313, Q1 and Q2. This amplified signal is passed to the power amplifier module (power module) IC1, which consists of a MOS-FET amplifier and is capable of transmission output power.

3-4. Automatic Power Control Circuit

The automatic transmission power control (APC) circuit stabilizes the transmitter output power at a predetermined level by detecting the power module output with a diodes D6, D7 and D8. Diodes D6, D7 and D8 apply a voltage to DC amplifier IC72 (A/2). IC72 (B/2) compares the APC control voltage (PC) generated by microprocessor IC404 and DC amplifier IC71 (A/2, B/2) with the detection output voltage from IC72 (A/2) to control the Vgg pin of IC1, and stabilizes transmission output.

The APC circuit is configured to protect over-current of the power module due to fluctuations of the load at the antenna end and to stabilize transmission output at voltage and temperature variations.

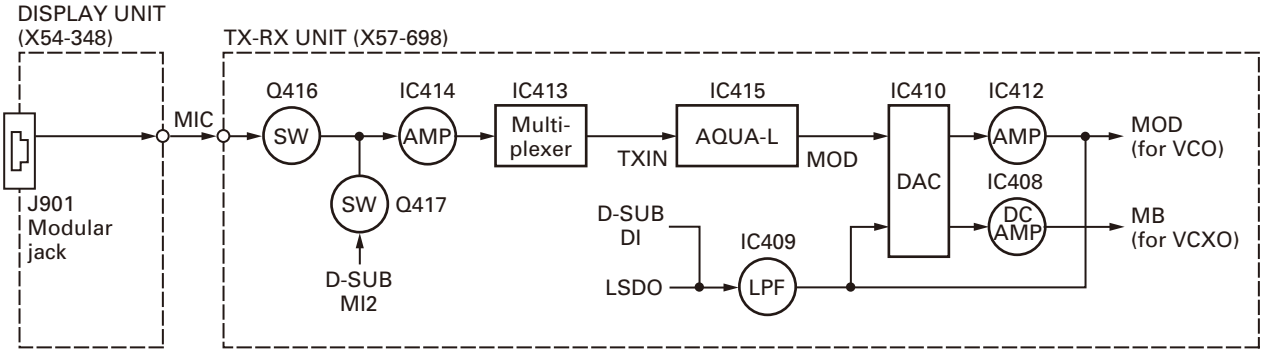

Fig. 2 Microphone and modultion level adjustment circuit

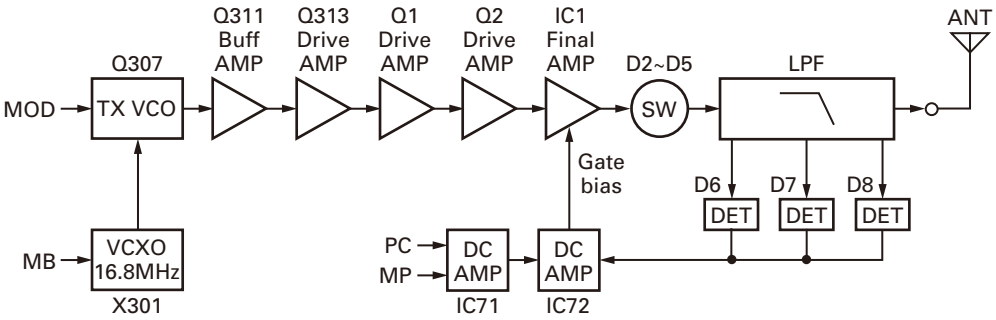

Fig. 3 Drive and Final power amplifier and automatic power control circuit

CIRCUIT DESCRIPTION

4. Frequency Synthesizer Unit

4-1. Frequency Synthesizer

The frequency synthesizer consists of the TCXO (X301), VCO, PLL IC (IC301) and buffer amplifiers.

The TCXO generates 16.8MHz. The frequency stability is 2.5ppm within the temperature range of –30 to +60°C. The frequency tuning and modulation of the TCXO are done to apply a voltage to pin 1 of the TCXO. The output of the TCXO is applied to pin 8 of the PLL IC.

The VCO consists of 2VCO and covers a dual range of the 261.85~314.85MHz and the 217~270MHz. The VCO generates 261.85~314.85MHz for providing to the first local signal in receive. The operating frequency is generated by Q307 in transmit mode and Q306 in receive mode. The oscillator frequency is controlled by applying the VCO control voltage, obtained from the phase comparator (IC301) to the variable capacitor diodes (D308 and D311 in transmit mode and D309 and D313 in receive mode).

The T/R pin of IC404 goes "high" in receive mode causing Q307 and Q309 to turn off, and Q306, Q308 and Q310 turn on. The T/R pin goes "low" in transmit mode.

The outputs from Q306 and Q307 are amplified by buffer amplifier (Q311) and doubled by Q301 and then sent to PLL IC.

The PLL IC consists of a prescaler, reference divider, phase comparator, charge pump (The frequency step of the PLL circuit is 10, 12.5kHz). The input signal from the pins 8 and 5 of the PLL IC is divided down to the 10, 12.5kHz and compared at phase comparator. The phase comparator output signal is fed into a low-pass filter (Q302 and Q303) before being applied to the VCO as a frequency control voltage. This low-pass filter's power is supplied by the DC/DC converter (IC251 and Q251). The DC signal is applied to the CV of the VCO and locked to keep the VCO frequency constant.

PLL data is output from DT (pin 112), PCK (pin 82) and PLE (pin 81) of the microprocessor (IC404). The data are input to the PLL IC when the channel is changed or when transmission is changed to reception and vice versa. A PLL lock condition is always monitored by the pin 80 (UL) of the microprocessor. When the PLL is unlocked, the UL goes low.

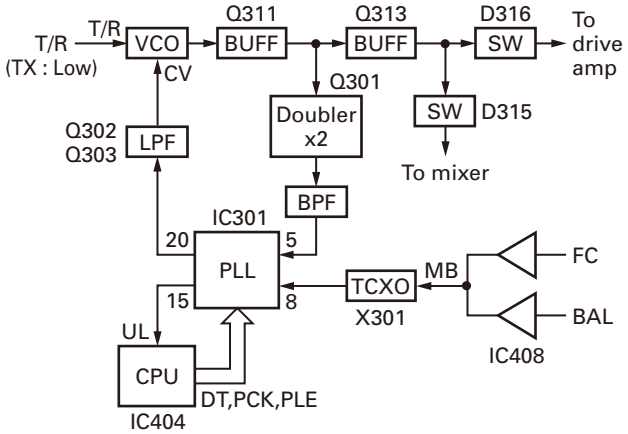

Fig. 4 PLL block diagram

5. Control Circuit

The block diagram of the control circuit is shown in Figure 5.

The CPU (IC404) is a 16-bit microcomputer that contains a 256k-byte Mask ROM and a 20k-byte RAM. This CPU is connected with an external 512k-byte Flash ROM (IC405) and operates in memory expansion mode.

The Firmware Program is stored in the Flash ROM and the user data and adjustment data are stored in the EEPROM (IC401). The CPU and Flash ROM are connected with an 8 bit bus and the EEPROM and RTC IC (IC402) are connected with a I2C bus (*1). The RTC IC (IC402) has a clock function and is controlled by the CPU (IC404).

Serial communication with a PC is performed through two paths: through the 232C Level converter IC (IC416) and through the Display Unit Panel CPU (IC902). The 8 bit Shift Register (IC403) is used as an 8-port Extended Output Port. IC410 is an 8 bit-8ch D/A converter. The channels are set as follows:

Ch1 : Modulation balance
Ch2 : Deviation Factor
Ch3 : Max Power Level
Ch4 : Reception tuning circuit
Ch5 : Deviation Factor
Ch6 : Speaker volume
Ch7 : VCXO control voltage
Ch8 : DEO output level

*1: I2C bus is a registered trademark of PHILIPS of the Netherlands.

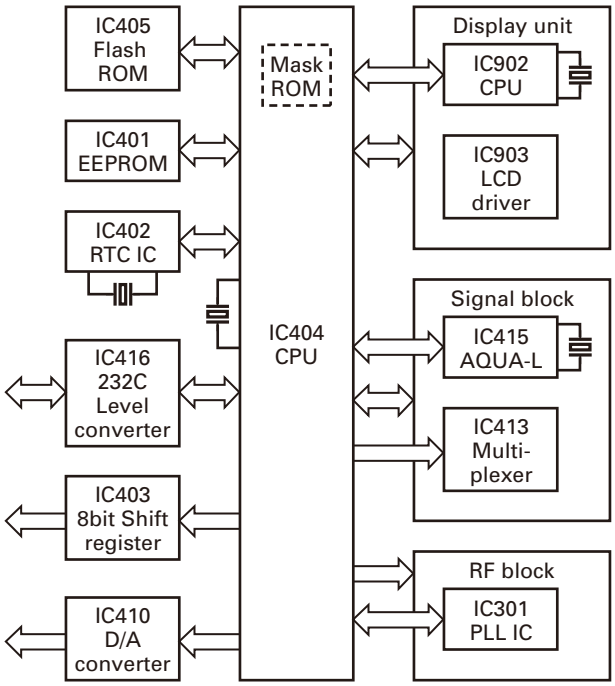

Fig. 5 Control circuit block diagram

CIRCUIT DESCRIPTION

6. Power Supply Circuit

The block diagram of the power supply circuit is shown in Figure 6.

Power is always supplied from +B to the circuit (5M, +B) that is always started and the circuits (SB, 8C, 5E, 8T, 8R, 5C, 5R) controlled by the CPU (IC404). When +B is supplied to the transceiver, Q801, D805 and IC805, regulate the voltage (5M) which is supplied to the circuit around the CPU. The CPU starts.

When the CPU detects that the +B voltage is higher than the voltage prescribed by IC802, the transceiver power (SB) is turned ON by controlling the SBC signal (Low: transceiver power OFF, High: transceiver power ON).

The CPU controls the TXC signal (Low: Transmission system power OFF, High: Transmission system power ON) during transmission to supply power (8T) to the transmission circuit. The CPU controls the RXC signal (Low: Reception system power OFF, High: Reception system power ON) during reception to supply power (8R, 5R) to the reception circuit.

When the CPU detects the PSW (Power Switch) signal, IGN (Ignition Sense) signal or INT signal, it controls the SBC signal and turns the transceiver power (SB) OFF.

If +B is not provided to the transceiver, power is supplied to only the RTC IC (IC402) through the secondary battery connected with CN401 to back up the clock.

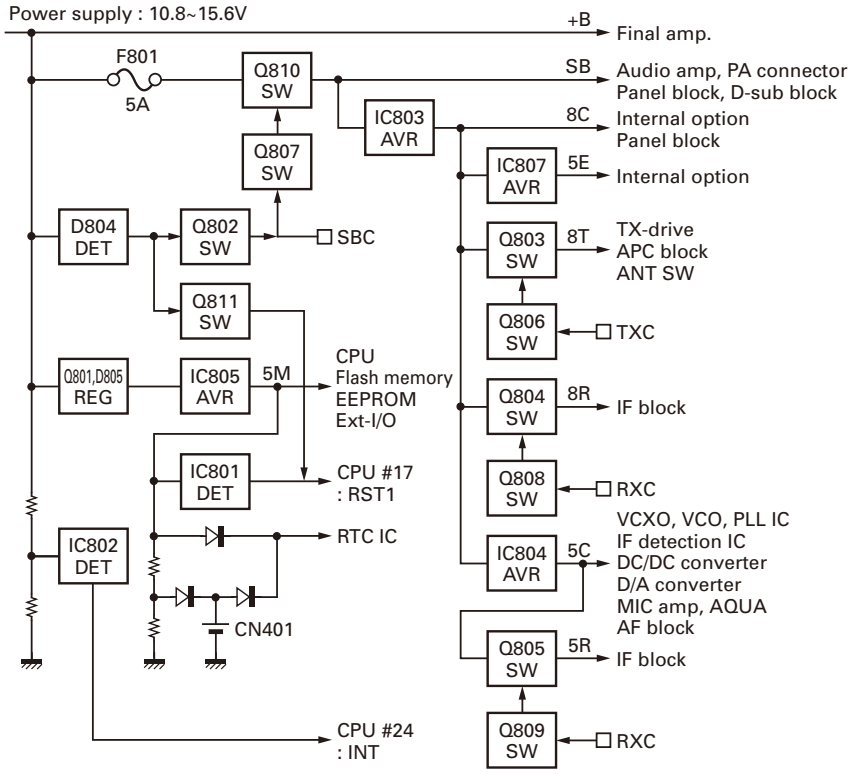

Fig. 6 Power supply circuit

7. Display Circuit

The display unit consists of the Panel CPU (IC902), the LCD driver (IC903), the TX/BUSY LED, the KEY detection, the Backlight and the Microphone jack circuits.

The Panel CPU is a 16-bit microcomputer that contains a 64k-byte Mask ROM and a 2k-byte RAM.

The Panel CPU performs serial communication with the Main CPU (IC404) on the TX-RX unit (B/3) and the Panel CPU detects keys and sends data communication contents through the MIC Jack to the Main CPU. The Panel CPU receives commands from the Main CPU and controls the display system.

The LCD operates with 1/9 duty under the LCD driver (IC903) control. The LCD and KEY Backlights are controlled by Q909. The display brightness of the LCD Backlight can be changed.

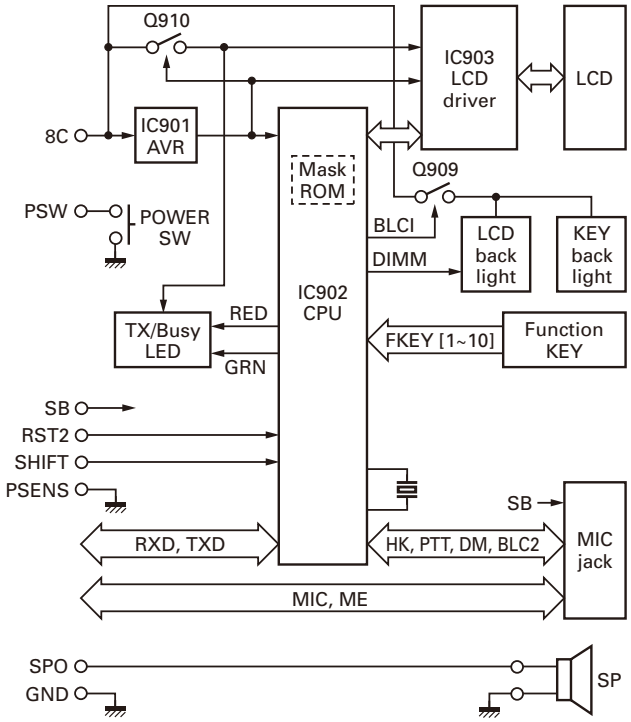

Fig. 7 Display circuit

SEMICONDUCTOR DATA

Microprocessor: 30625MGP169GU (TX-RX unit IC404)

Pin No.	Port Name	I/O	Function
1	VREF	-	+5V
2	AVCC	-	+5V
3	SBC	O	Switched B control
4	RXC	O	RX control
5	TXC	O	TX control
6	PC	O	TX APC adjust
7	HSDO	O	High speed data output
8	STSW	O	Side tone switch
9	RTCL/EEPCL	O	RTC/EEPROM clock
10	HSDIN	I	High speed data input
11	NC	-	No connection
12	RTDT/EEPDAT	I/O	RTC/EEPROM data
13	BYTE	-	+5V
14	CNVSS	-	DGND (Vss)
15	DMUTE	O	DET mute
16	AM2	O	Audio mute 2
17	RST	I	Reset
18	Xout	O	11.0592MHz clock output
19	DGND	-	DGND (Vss)
20	Xin	I	11.0592MHz clock input
21	VCC1	-	+5V
22	NMI	-	+5V
23	PSW	I	Power switch input
24	INT	I	BATT voltage INT
25	INTRA	I	RTC INT
26	SHIFT/MODEL	I/O	Beat shift/Model select
27	BEEP	O	Beep output
28	SPSTB	O	Shift register strobe
29	SOE	O	Shift register output enable
30	AIO5	I/O	AUX I/O 5
31	AIO9	I/O	AUX I/O 9
32	DSTB	O	D/A converter LD
33	LSDO	O	Low speed data output
34	RXD2	I	RXD2
35	TXD2	O	TXD2
36	TXD1	O	TXD1/PTT (Scrambler board)
37	Vcc1	-	+5V
38	RXD1	I	RXD1
39	DGND	-	DGND (Vss)
40	MM1	O	MIC mute 1
41	PSENS	I	Panel sense
42	TXD	O	TXD
43	RXD	I	RXD
44	AFDAT	O	BB TDATA and DTRCLK
45	AFDIO	I/O	BB DI/O
46	AFDIR	O	BB DIR
47	DTRLOAD	O	BB DTMF enable
48	AFSTD	I	BB STD
49	LSW	O	BB LIM switch
50	RDY	-	+5V
51	NC	-	No connection
52	HOLD	-	+5V
53	NC	-	No connection
54~57	AIO4~AIO1	I/O	AUX I/O 4~1
58	NC	-	No connection
59	RD	O	Read (RD)
60	NC	-	No connection
61	WR	O	Write (WR)
62~64	AIO8~AIO6	I/O	AUX I/O 8~6
65,66	NC	-	No connection
67	RST2	O	Display µ-com reset
68	CS0	O	Chip select 0
69	NC	-	No connection
70~79	A18~A9	O	Address bus 18~9
80	UL	I	PLL unlock
81	PLE	O	PLL enable
82	PCK	O	PLL clock
83	NC	-	No connection
84	OPT6	I/O	Option board I/F 6
85	VCC2	-	+5V
86	A8	O	Address bus 8
87	DGND	-	DGND (Vss)
88~95	A7~A0	O	Address bus 7~0
96	IGN	I	Ignition sense
97	AFRTM	I	BB RDF/FD
98	TCLK/DTRDO	I	BB TCLK and DTRDO
99	MM2	O	MIC mute 2
100	T/R	O	TX/RX switch
101	AM1	O	Audio mute 1
102	EMTON	O	EM tone switch
103	NC	-	No connection
104~111	D7~D0	I/O	Data bus7~0
112	DT	O	Serial data
113	CK	O	Serial clock
114	W/N	O	Wide/Narrow switch
115~117	OPT 1~OPT 3	I/O	Option board I/F 1~3
118,119	OPT 4, OPT 5	O	Option board I/F 4, 5
120	H/L	O	High/Low power switch

SEMICONDUCTOR DATA

Pin No.	Port Name	I/O	Function
121	THP	I	TX thermal input
122,123	NC	-	No connection
124	ASQ	I	RX analog squelch input
125	RSSI	I	RX RSSI input
126	NC	-	No connection
127	AGND	-	AGND (Vss)
128	LSDIN	I	Low speed data input

Microprocessor: 30302M88Z7GU (Display unit IC902)

Pin No.	Port Name	I/O	Function
1~4	NC	-	No connection
5	SHIFT	O	Beat shift
6	BYTE	-	+5V
7	CNVSS	-	GND
8,9	NC	-	No connection
10	RST	I	Reset
11	Xout	O	14.7456MHz clock output
12	GND	-	GND
13	Xin	I	14.7456MHz clock input
14	VCC	-	+5V
15	NMI	-	+5V
16	BLC2	O	MIC backlight control
17	BLC1	O	Key & LCD backlight control
18	DIMM	O	Dimmer control
19	LEDG	O	LED green
20	LEDR	O	LED red
21	NC	-	No connection
22	LCDCK	O	LCD serial clock
23	LCDDT	O	LCD serial data
24	LCDCS	O	LCD chip select
25	LCDRST	O	LCD reset
26	NC	-	No connection
27	RXD2	I	RXD2 (Main μ-com)
28	TXD2	O	TXD2 (Main μ-com)
29	PTT/TXD	I/O	PTT/TXD (COM0)
30	NC	-	No connection
31	DM	O	MIC DM
32,33	NC	-	No connection
34	HK/RXD	I	HOOK/RXD (COM0)
35~59	NC	-	No connection
60	VCC	-	+5V
61	NC	-	No connection
62	VSS	-	GND
63~70	NC	-	No connection
71~82	S22~S11	I	No connection
83	S10	I	Front panel key (R down [⌄⌄])
84	S9	I	Front panel key (R up [⌃⌃])
85	S8	I	Front panel key (■)
86	S7	I	Front panel key (C)
87	S6	I	Front panel key (B)
88	S5	I	Front panel key (A)
89	S4	I	Front panel key (S)
90	S3	I	Front panel key (⌓)
91	S2	I	Front panel key (L down [⌄])
92	S1	I	Front panel key (L up [⌃])
93	NC	-	No connection
94	AVSS	-	GND
95	NC	-	No connection
96	VREF	-	+5V
97	AVCC	-	+5V
98~100	NC	-	No connection

Shift Register: BU4094BCFV (TX-RX unit IC403)

Pin No.	Port Name	I/O	Function
1	STRB	I	Storage enable input
2	DATA	I	Serial data input
3	CLK	I	Serial clock input
4	Q1	O	AUX output 1
5	Q2	O	Public address
6	Q3	O	Horn alert
7	Q4	O	Scrambler switch
8	Vss	-	
9	Qs	O	
10	Q's	O	
11	Q8	O	Ceramic filter switch
12	Q7	O	No connection
13	Q6	O	AUX output 2
14	Q5	O	Gate switch
15	OE	I	Output enable
16	VDD	-	

COMPONENTS DESCRIPTION

Display unit (X54-3480-10)

Ref. No.	Part Name	Description
IC901	IC	Voltage regulator/ 5V
IC902	IC	Microprocessor
IC903	IC	LCD driver
Q901,902	Transistor	HOOK switch
Q904	Transistor	TX indication LED switch
Q905	Transistor	BUSY indication LED switch
Q906	Transistor	Dimmer switch control
Q907	Transistor	Dimmer switch
Q909	Transistor	Backlight control switch
Q910	Transistor	8C switch
Q911	Transistor	8C switch control
Q913	Transistor	Backlight control
D901,902	Zener diode	Voltage protection
D903	Varistor	Current limiter
D905	Diode	Surge protection
D907	LED	TX/Busy indication
D909~920	LED	LCD backlight
D921~930	LED	KEY backlight
D931~933	Varistor	Surge protection

TX-RX unit (X57-6982-72)

Ref. No.	Part Name	Description
IC1	IC	Power module
IC71,72	IC	DC amp for TX APC
IC171	IC	RX 1st mixer
IC172	IC	FM IF system IC
IC251	IC	DC-DC converter
IC301	IC	PLL system IC
IC302	IC	PLL CP switch
IC401	IC	EEPROM
IC402	IC	RTC processor
IC403	IC	Shift register
IC404	IC	Microprocessor
IC405	IC	Flash memory
IC406	IC	HSD BPF/HSD comparator
IC407	IC	DET amp/Data LPF (DB-25)
IC408	IC	LSD buffer amp/VCXO bias amp
IC409	IC	LSD LPF/Voltage DC-reference
IC410	IC	D/A converter
IC411	IC	RF BPF tuning voltage DC amp
IC412	IC	Modulation LPF/DET amp
IC413	IC	AF switch IC
IC414	IC	MIC amp
IC415	IC	AQUA-L
IC416	IC	Level converter IC (RS-232C)
IC417	IC	Audio IC
IC801	IC	Voltage detector (CPU reset)
IC802	IC	Voltage detector (INT)
IC803	IC	Voltage regulator/ 8V
IC804,805	IC	Voltage regulator/ 5V
IC807	IC	Voltage regulator/ 5V
Q1	Transistor	TX pre-driver
Q2	Transistor	TX driver
Q3	Transistor	TX gate switch
Q72	FET	High/Low power switch
Q73	Transistor	High/Low power switch
Q103	Transistor	Front-end LNA
Q171,172	Transistor	IF amp
Q173,174	Transistor	W/N CF switch control
Q175	Transistor	Noise amp
Q176	FET	DET mute switch
Q177	Transistor	W/N CF switch control
Q178	Transistor	W/N discrete switch
Q180	Transistor	W/N CF switch control
Q251	Transistor	Ripple filter
Q301	Transistor	PLL f-in doubler amp
Q302,303	Transistor	PLL LPF
Q305	Transistor	PLL f-in filter switch control
Q306,307	FET	TX/RX VCO
Q308~310	Transistor	TX/RX VCO switch
Q311	Transistor	VCO buffer amp
Q312	Transistor	Ripple filter
Q313	Transistor	VCO buffer amp
Q314	Transistor	PLL f-in filter switch control
Q402	Transistor	Beat shift switch
Q405	Transistor	AQUA control switch
Q406	FET	AF switch (LSD)
Q409	Transistor	AF mute switch
Q410,411	Transistor	MIC AGC
Q412	FET	AF mute switch
Q413,414	FET	AF switch
Q415	FET	AF switch (Voice)
Q416,417	FET	MIC mute switch
Q418	Transistor	AF mute control switch
Q419	Transistor	AF mute switch
Q421	Transistor	MIC mute switch
Q701,702	Transistor	Inverter switch
Q801	Transistor	Voltage regulator/ 8.5V

COMPONENTS DESCRIPTION

Ref. No.	Part Name	Description
Q802	Transistor	SB control switch
Q803	Transistor	8T switch
Q804	Transistor	8R switch
Q805	Transistor	5R switch
Q806	Transistor	8T control switch
Q807	Transistor	SB control switch
Q808	Transistor	8R control switch
Q809	Transistor	5R control switch
Q810	FET	SB switch
Q811	Transistor	CPU reset switch
Q812	Transistor	Ignition sense control switch
D1	Zener diode	Voltage protection
D2~5	Diode	ANT switch
D6~8	Diode	RF detector
D11	Variable capacitance diode	RF BPF tuning
D103~106	Variable capacitance diode	RF BPF tuning
D171,172	Diode	W/N CF switch
D173	Diode	SQ noise amp detector
D174	Diode	DET mute switch control
D251	Diode	Reverse voltage protection
D301,302	Diode	PLL f-in filter switch
D304,305	Diode	PLL f-in filter switch

Ref. No.	Part Name	Description
D308,309, D311,313	Variable capacitance diode	Frequency control for TX/RX VCO
D314	Variable capacitance diode	Modulation control for TX VCO
D315,316	Diode	TX/RX band switch
D402~404	Diode	RTC battery control
D405,406	Zener diode	Voltage protection
D407	Diode	DC detector
D408,409	Diode	MIC amp AGC detector
D412~414	Diode	Surge protect
D416	Diode	AF mute control
D417,418	Diode	Isolator
D419,420	Diode	MIC mute control
D421~423	Diode	Voltage protection
D603,604	Diode	MIC mute control
D701	Zener diode	Voltage protection
D702,703	Diode	Voltage protection
D704~708	Diode	Surge protect
D709,710	Zener diode	Voltage protection
D711~713	Diode	Surge protect
D714	Zener diode	Voltage protection
D801	Surge absorber	Voltage protection
D802	Diode	DC reverse connection protect
D804,805	Zener diode	Voltage protection

TK-7185

PARTS LIST

✻ New Parts. ⚠indicates safety critical components.
Parts without **Parts No.** are not supplied.
Les articles non mentionnes dans le **Parts No.** ne sont pas fournis.
Teile ohne **Parts No.** werden nicht geliefert.

L : Scandinavia **K** : USA **P** : Canada
Y : PX (Far East, Hawaii) **T** : England **E** : Europe
Y : AAFES (Europe) **X** : Australia **M** : Other Areas

TK-7185 (Y51-5022-73)
DISPLAY UNIT (X54-3480-10)

Ref. No.	Address	New parts	Parts No.	Description	Desti-nation
TK-7185					
1	1B		A01-2194-11	METALLIC CABINET	
2	3A	✻	A62-1166-03	PANEL ASSY	
5	2A		B09-0681-03	CAP (KAP-2)	
6	1D	✻	B62-2105-00	INSTRUCTION MANUAL	
8	2B		E04-0454-15	RF COAXIAL RECEPTACLE (BNC)	
9	2B		E30-7520-15	DC CORD (PIG TAIL)	
10	2C		E30-7523-35	DC CORD ASSY ACCESSORY	
13	1A		E37-1118-05	LEAD WIRE WITH CONNECTOR (SHORT CABLE)	
15	3B		E37-1124-05	LEAD WIRE WITH CONNECTOR (2P/SP)	
12	2A	✻	E37-1448-05	FLAT CABL E(30P/D-SUB)	
14	2A	✻	E37-1449-05	FLAT CABLE (30P/PANEL)	
17	2B		F10-2488-12	SHIELDING PLATE (CHASSIS)	
19	1A		F10-2490-13	SHIELDING CASE (VCO)	
20	1A		F10-3032-14	SHIELDING CASE ASSY (FINAL)	
21	1A		F10-3033-02	SHIELDING CASE (PM)	
22	1C		F52-0024-05	FUSE (BLADE TYPE) 15A/32V	
24	3B		G10-1342-04	FIBROUS SHEET (BIRITSUKI)	
25	2A		G11-4290-04	RUBBER SHEET (CHASSIS)	
26	1B		G11-4343-04	SHEET (CABINET)	
27	1A		G13-2018-04	CUSHION (SHIELD CASE:FINAL)	
28	2B		G13-2047-04	CUSHION (DC SCREW)	
29	1A		G13-2101-04	CONDUCTIVE CUSHION (PM BACK)	
30	1A		G13-2102-04	CONDUCTIVE CUSHION (PM TOP)	
31	1B		G53-1613-11	PACKING (SHIELD PLATE)	
33	1A		G53-1616-03	PACKING (PHONE JACK)	
34	2B		G53-1626-03	PACKING (D-SUB OUTER)	
35	2B		G53-1643-04	PACKING (DC CORD)	
36	2B		G53-1645-03	PACKING (D-SUB INNER)	
37	2A		G53-1675-04	PACKING (BNC)	
38	3A		G53-1676-03	PACKING (CHASSIS)	
40	3D		H52-2256-03	ITEM CARTON CASE	
46	3B		J19-5464-13	HOLDER (SP)	
48	3B		J19-5485-12	HOLDER (PANEL)	
49	2B		J21-8479-02	MOUNTING HARDWARE (D-SUB)	
50	3B		J21-8481-03	MOUNTING HARDWARE (SP)	
51	2C		J29-0726-03	BRACKET ACCESSORY	
52	3B		J30-1289-04	SPACER (SP)	
55	3A		K29-9349-01	KEY TOP	
A	2B		N09-2409-05	HEXAGON HEAD SCREW (D-SUB)	
B	1A		N67-3008-48	PAN HEAD SEMS SCREW (FINAL IC)	
C	1A,2B		N87-2608-48	BRAZIER HEAD TAPTITE SCREW (ANT,PCB)	
58	2C		N99-2039-05	SCREW SET ACCESSORY	
60	3B		T07-0757-15	SPEAKER	
62	2A		W09-0971-05	LITHIUM CELL	

Ref. No.	Address	New parts	Parts No.	Description	Desti-nation
DISPLAY UNIT (X54-3480-10)					
101	3B		B11-1825-04	FILTER (LCD)	
102	3B		B38-0888-15	LCD	
D907			B30-2151-05	LED (R/G)	
D909-920			B30-2281-05	LED (Y)	
D921-930			B30-2282-05	LED (Y)	
C907,908			CK73HB1H102K	CHIP C 1000PF K	
C909			CK73GB1H222K	CHIP C 2200PF K	
C910,911			CC73GCH1H101J	CHIP C 100PF J	
C912,913			CK73GB1H102K	CHIP C 1000PF K	
C914			CC73GCH1H101J	CHIP C 100PF J	
C916,917			CK73GB1C104K	CHIP C 0.10UF K	
C918			CS77AA1A100M	CHIP TNTL 10UF 10WV	
C920			CC73GCH1H101J	CHIP C 100PF J	
C921			CK73GB1H102K	CHIP C 1000PF K	
C922			CK73GB1H103K	CHIP C 0.010UF K	
C924,925			CC73GCH1H100D	CHIP C 10PF D	
C926-928			CK73GB1H102K	CHIP C 1000PF K	
C930			CK73GB1H103K	CHIP C 0.010UF K	
C931			CS77CP1A4R7M	CHIP TNTL 4.7UF 10WV	
C932-934			CK73GB1H103K	CHIP C 0.010UF K	
C935			CK73GB1H471K	CHIP C 470PF K	
C936			CK73GB1C104K	CHIP C 0.10UF K	
C937			CK73GB1H103K	CHIP C 0.010UF K	
C938			CK73GB1H102K	CHIP C 1000PF K	
103	3B		E29-1202-04	INTER CONNECTOR (LCD)	
CN901			E41-2671-05	PIN ASSY	
CN902			E40-6559-05	FLAT CABLE CONNECTOR	
J901	3B		E58-0522-05	MODULAR JACK	
105	3B		J19-5467-03	HOLDER (LCD)	
106	3B		J21-8470-03	MOUNTING HARDWARE (LCD)	
-			J31-0551-05	COLLAR	
L901,902			L41-1095-39	SMALL FIXED INDUCTOR (1.0UH)	
L903-907			L92-0140-05	CHIP FERRITE	
L908,909			L92-0163-05	BEADS CORE	
X901			L77-1956-05	CRYSTAL RESONATOR (14.7456MHZ)	
CP901-911			RK75HA1J101J	CHIP-COM 100 J 1/16W	
R901			RK73GB2A102J	CHIP R 1.0K J 1/10W	
R903			RK73GB2A000J	CHIP R 0.0 J 1/10W	
R904			RK73GB2A102J	CHIP R 1.0K J 1/10W	
R905			RK73GB2A472J	CHIP R 4.7K J 1/10W	
R907			RK73GB2A333J	CHIP R 33K J 1/10W	
R909-911			RK73GB2A473J	CHIP R 47K J 1/10W	
R913-916			RK73HB1J474J	CHIP R 470K J 1/16W	
R917			RK73FB2B471J	CHIP R 470 J 1/8W	
R918			RK73FB2B271J	CHIP R 270 J 1/8W	
R919			RK73HB1J102J	CHIP R 1.0K J 1/16W	
R920			RK73HB1J000J	CHIP R 0.0 J 1/16W	
R925			RK73HB1J471J	CHIP R 470 J 1/16W	
R926			RK73HB1J473J	CHIP R 47K J 1/16W	
R927-935			RK73HB1J102J	CHIP R 1.0K J 1/16W	
R936			RK73HB1J103J	CHIP R 10K J 1/16W	
R939			RK73GB2A472J	CHIP R 4.7K J 1/10W	
R940			RK73HB1J101J	CHIP R 100 J 1/16W	

PARTS LIST

DISPLAY UNIT (X54-3480-10)
TX-RX UNIT (X57-6982-72)

Ref. No.	Address	New parts	Parts No.	Description				Destination
R941			RK73HB1J102J	CHIP R	1.0K	J	1/16W	
R942			RK73EB2E470J	CHIP R	47	J	1/4W	
R943			RK73EB2E101J	CHIP R	100	J	1/4W	
R944			RK73HB1J000J	CHIP R	0.0	J	1/16W	
R945			RK73GB2A103J	CHIP R	10K	J	1/10W	
R947-950			RK73FB2B101J	CHIP R	100	J	1/8W	
R951,952			RK73FB2B391J	CHIP R	390	J	1/8W	
R953,954			RK73FB2B821J	CHIP R	820	J	1/8W	
R955-958			RK73HB1J472J	CHIP R	4.7K	J	1/16W	
R959			RK73HB1J103J	CHIP R	10K	J	1/16W	
R962,963			RK73GB2A103J	CHIP R	10K	J	1/10W	
R967			RK73HB1J271J	CHIP R	270	J	1/16W	
R969			RK73HB1J000J	CHIP R	0.0	J	1/16W	
R970			RK73GB2A103J	CHIP R	10K	J	1/10W	
R971			RK73HB1J102J	CHIP R	1.0K	J	1/16W	
D901,902			02DZ18F-X,Y	ZENER DIODE				
D903			MINISMDC020F	VARISTOR				
D905			DA204U	DIODE				
D931-933			AVRM16080MAAB	VARISTOR				
IC901			TA78L05FF	MOS-IC				
IC902			30302M88Z7GU	MICROCONTROLLER IC				
IC903			LC75810T-8726	MOS-IC				
Q901,902			DTC144EE	DIGITAL TRANSISTOR				
Q904-906			DTC114EE	DIGITAL TRANSISTOR				
Q907			2SC2873(Y)F	TRANSISTOR				
Q909,910			12A02CH	TRANSISTOR				
Q911			DTC114EE	DIGITAL TRANSISTOR				
Q913			DTC114EE	DIGITAL TRANSISTOR				
TH901			S1R103J440H	THERMISTOR				

TX-RX UNIT (X57-6982-72)

Ref. No.	Address	New parts	Parts No.	Description				Destination
C1			CK73GB1H102K	CHIP C	1000PF	K		
C2-5			CK73GB1H471K	CHIP C	470PF	K		
C6			C92-0870-05	CHIP TNTL	4.7UF	16WV		
C7			CK73GB1E105K	CHIP C	1.0UF	K		
C8			CK73GB1H471K	CHIP C	470PF	K		
C9			CK73GB1H102K	CHIP C	1000PF	K		
C10			CK73GB1H471K	CHIP C	470PF	K		
C13-15			CK73GB1H471K	CHIP C	470PF	K		
C16			CC73GCH1H560J	CHIP C	56PF	J		
C17			CC73GCH1H220J	CHIP C	22PF	J		
C18			CK73GB1H471K	CHIP C	470PF	K		
C19			CC73GCH1H470J	CHIP C	47PF	J		
C20			CC73GCH1H101J	CHIP C	100PF	J		
C21			CK73FB1H102K	CHIP C	1000PF	K		
C22			CK73GB1H471K	CHIP C	470PF	K		
C24			CS77AA1A4R7M	CHIP TNTL	4.7UF	10WV		
C26			CC73GCH1H220J	CHIP C	22PF	J		
C27			CC73GCH1H470J	CHIP C	47PF	J		
C28			CC73GCH1H101J	CHIP C	100PF	J		
C29-31			CK73GB1H471K	CHIP C	470PF	K		
C32			C92-0875-05	ELECTRO	47UF	25WV		
C33-35			CC73GCH1H101J	CHIP C	100PF	J		
C38-40			CK73GB1H471K	CHIP C	470PF	K		
C41			CC73GCH1H180J	CHIP C	18PF	J		
C43			CC73GCH1H040B	CHIP C	4.0PF	B		
C44			C93-0568-05	CHIP C	47PF	J		
C46			C93-0564-05	CHIP C	22PF	J		
C47			CC73GCH1H0R5B	CHIP C	0.5PF	B		
C48			CC73GCH1H020B	CHIP C	2.0PF	B		
C49			CK73GB1H471K	CHIP C	470PF	K		
C51			CK73GB1H471K	CHIP C	470PF	K		
C52			CM73F2H270J	CHIP C	27PF	J		
C53			CM73F2H240J	CHIP C	24PF	J		
C56			C93-0563-05	CHIP C	18PF	J		
C57			CC73GCH1H0R5B	CHIP C	0.5PF	B		
C58			CC73GCH1H1R5B	CHIP C	1.5PF	B		
C59			CK73GB1H471K	CHIP C	470PF	K		
C60			C93-0561-05	CHIP C	12PF	J		
C61			CK73GB1H471K	CHIP C	470PF	K		
C63			CC73GCH1H120J	CHIP C	12PF	J		
C64			CC73GCH1H060D	CHIP C	6.0PF	D		
C65			CC73GCH1H180J	CHIP C	18PF	J		
C73			CK73GB1H821K	CHIP C	820PF	K		
C74			CK73GB1H471K	CHIP C	470PF	K		
C75			CK73GB1H821K	CHIP C	820PF	K		
C76,77			CK73GB1H471K	CHIP C	470PF	K		
C78			CK73GB1E105K	CHIP C	1.0UF	K		
C79,80			CK73GB1H471K	CHIP C	470PF	K		
C82			CC73GCH1H0R5B	CHIP C	0.5PF	B		
C83			CC73GCH1H030B	CHIP C	3.0PF	B		
C84			CK73GB1H471K	CHIP C	470PF	K		
C85			CS77AB21D2R2M	CHIP TNTL	2.2UF	20WV		
C87			CC73GCH1H080D	CHIP C	8.0PF	D		
C88			CC73GCH1H120J	CHIP C	12PF	J		
C106			CC73GCH1H070D	CHIP C	7.0PF	D		
C108			CC73GCH1H150J	CHIP C	15PF	J		
C109			CC73GCH1H080B	CHIP C	8.0PF	B		
C110			CC73GCH1H560J	CHIP C	56PF	J		
C111			CC73GCH1H110J	CHIP C	11PF	J		
C112			CC73GCH1H080D	CHIP C	8.0PF	D		
C113			CC73GCH1H070B	CHIP C	7.0PF	B		
C115			CC73GCH1H090B	CHIP C	9.0PF	B		
C116,117			CC73GCH1H080D	CHIP C	8.0PF	D		
C119,120			CK73GB1H102K	CHIP C	1000PF	K		
C123			CK73GB1C104K	CHIP C	0.10UF	K		
C124			CC73GCH1H070D	CHIP C	7.0PF	D		
C125,126			CK73GB1H102K	CHIP C	1000PF	K		
C127			CC73GCH1H560J	CHIP C	56PF	J		
C128			CC73GCH1H060D	CHIP C	6.0PF	D		
C129			CK73GB1H102K	CHIP C	1000PF	K		
C130			CC73GCH1H050B	CHIP C	5.0PF	B		
C131			CK73GB1H102K	CHIP C	1000PF	K		
C132			CC73GCH1H560J	CHIP C	56PF	J		
C134			CC73GCH1H020B	CHIP C	2.0PF	B		
C135			CC73GCH1H560J	CHIP C	56PF	J		
C137			CK73GB1H102K	CHIP C	1000PF	K		
C138			CC73GCH1H050B	CHIP C	5.0PF	B		
C139			CK73GB1H102K	CHIP C	1000PF	K		
C140			CC73GCH1H560J	CHIP C	56PF	J		
C141			CC73GCH1H060D	CHIP C	6.0PF	D		
C142			CC73GCH1H330J	CHIP C	33PF	J		
C144			CK73GB1H103K	CHIP C	0.010UF	K		
C145			CK73GB1H102K	CHIP C	1000PF	K		
C147			CC73GCH1H070B	CHIP C	7.0PF	B		
C149			CK73GB1H102K	CHIP C	1000PF	K		
C150			CC73GCH1H080D	CHIP C	8.0PF	D		
C171			CC73GCH1H120J	CHIP C	12PF	J		

PARTS LIST

TX-RX UNIT (X57-6982-72)

Ref. No.	Address	New parts	Parts No.	Description			Desti-nation
C172			CC73GCH1H020B	CHIP C	2.0PF	B	
C173			CC73GCH1H180J	CHIP C	18PF	J	
C174			CC73GCH1H050B	CHIP C	5.0PF	B	
C175			CC73GCH1H090D	CHIP C	9.0PF	D	
C177			CK73GB1H102K	CHIP C	1000PF	K	
C181			CK73GB1H102K	CHIP C	1000PF	K	
C182,183			CK73GB1H103K	CHIP C	0.010UF	K	
C184			CK73GB1H102K	CHIP C	1000PF	K	
C185			CK73GB1H103K	CHIP C	0.010UF	K	
C186			CC73GCH1H330J	CHIP C	33PF	J	
C187			CC73GCH1H390J	CHIP C	39PF	J	
C188,189			CC73GCH1H040B	CHIP C	4.0PF	B	
C190			CC73GCH1H390J	CHIP C	39PF	J	
C192-194			CK73GB1H103K	CHIP C	0.010UF	K	
C195			CK73GB1H102K	CHIP C	1000PF	K	
C196,197			CK73GB1H103K	CHIP C	0.010UF	K	
C198			CC73GCH1H680J	CHIP C	68PF	J	
C199			CC73GCH1H390J	CHIP C	39PF	J	
C200,201			CC73GCH1H040B	CHIP C	4.0PF	B	
C202			CC73GCH1H390J	CHIP C	39PF	J	
C203			CC73GCH1H330J	CHIP C	33PF	J	
C204			CK73GB1H103K	CHIP C	0.010UF	K	
C206			CK73GB1H103K	CHIP C	0.010UF	K	
C207			CK73GB1H102K	CHIP C	1000PF	K	
C208,209			CK73GB1H103K	CHIP C	0.010UF	K	
C210			CC73GCH1H270J	CHIP C	27PF	J	
C211			CC73GCH1H100D	CHIP C	10PF	D	
C212			CK73GB1H471K	CHIP C	470PF	K	
C213			CK73GB1H103K	CHIP C	0.010UF	K	
C214			CK73GB1C104K	CHIP C	0.10UF	K	
C215			CC73GCH1H180J	CHIP C	18PF	J	
C216			CC73GCH1H150J	CHIP C	15PF	J	
C217			CK73GB1H102K	CHIP C	1000PF	K	
C218			CK73GB1H103K	CHIP C	0.010UF	K	
C219			CK73FB1C105K	CHIP C	1.0UF	K	
C220,221			CK73GB1C104K	CHIP C	0.10UF	K	
C222			CK73GB1H182K	CHIP C	1800PF	K	
C223			CK73GB1H103K	CHIP C	0.010UF	K	
C224,225			CC73GCH1H271J	CHIP C	270PF	J	
C226,227			CK73GB1H102K	CHIP C	1000PF	K	
C228			CK73GB1C104K	CHIP C	0.10UF	K	
C229			CK73GB1C333K	CHIP C	0.033UF	K	
C230			CK73GB1H103K	CHIP C	0.010UF	K	
C231			CC73GCH1H820J	CHIP C	82PF	J	
C232,233			CK73GB1H102K	CHIP C	1000PF	K	
C234			CK73FB1C224K	CHIP C	0.22UF	K	
C235			CK73GB1C104K	CHIP C	0.10UF	K	
C236			CK73GB1H103K	CHIP C	0.010UF	K	
C237			CS77AA0J220M	CHIP TNTL	22UF	6.3WV	
C238			CK73GB1H103K	CHIP C	0.010UF	K	
C239,240			CK73GB1C104K	CHIP C	0.10UF	K	
C241			CK73GB1H222K	CHIP C	2200PF	K	
C251,252			CK73GB1H102K	CHIP C	1000PF	K	
C253			CK73GB1H103K	CHIP C	0.010UF	K	
C255			CS77CB21C100M	CHIP TNTL	10UF	16WV	
C256			CK73GB1H103K	CHIP C	0.010UF	K	
C257			CS77AA1E010M	CHIP TNTL	1.0UF	25WV	
C258			C93-0992-05	CHIP C	10UF	16WV	
C259			CS77AA1A100M	CHIP TNTL	10UF	10WV	
C299			CS77CP0J100M	CHIP TNTL	10UF	6.3WV	

Ref. No.	Address	New parts	Parts No.	Description			Desti-nation
C301			CC73GCH1H101J	CHIP C	100PF	J	
C303			CK73GB1H471K	CHIP C	470PF	K	
C304			CC73GCH1H270J	CHIP C	27PF	J	
C305			CS77AA0J4R7M	CHIP TNTL	4.7UF	6.3WV	
C307-309			CK73GB1H102K	CHIP C	1000PF	K	
C311			CK73GB1H102K	CHIP C	1000PF	K	
C312			CS77CA1V0R1M	CHIP TNTL	0.1UF	35WV	
C313			CK73GB1C104K	CHIP C	0.10UF	K	
C314			CK73FB1E104K	CHIP C	0.10UF	K	
C315-317			CK73GB1H102K	CHIP C	1000PF	K	
C318			C92-0657-05	CHIP TNTL	2.2UF	20WV	
C319			CK73GB1H102K	CHIP C	1000PF	K	
C320			C92-0657-05	CHIP TNTL	2.2UF	20WV	
C321			CK73GB1C104K	CHIP C	0.10UF	K	
C323			CC73GCH1H180J	CHIP C	18PF	J	
C324			CC73GCH1H080B	CHIP C	8.0PF	B	
C325			CC73GCH1H030B	CHIP C	3.0PF	B	
C326			CC73GCH1H020B	CHIP C	2.0PF	B	
C327			CK73FB1E224K	CHIP C	0.22UF	K	
C331			CK73GB1H102K	CHIP C	1000PF	K	
C333			CC73GCH1H180J	CHIP C	18PF	J	
C334			CC73GCH1H150J	CHIP C	15PF	J	
C335			CK73GB1C223K	CHIP C	0.022UF	K	
C336			CK73GB1C104K	CHIP C	0.10UF	K	
C337			CK73GB1H102K	CHIP C	1000PF	K	
C338			CS77CA1VR15M	CHIP TNTL	0.15UF	35WV	
C339			CK73GB1H102K	CHIP C	1000PF	K	
C342			CK73GB1H102K	CHIP C	1000PF	K	
C343			CS77AA1A100M	CHIP TNTL	10UF	10WV	
C346			CC73GCH1H101G	CHIP C	100PF	G	
C347			CC73GCH1H270J	CHIP C	27PF	J	
C350			CC73GCH1H470G	CHIP C	47PF	G	
C352			CC73GCH1H070B	CHIP C	7.0PF	B	
C353			CK73GB1H102K	CHIP C	1000PF	K	
C354			CC73GCH1H270J	CHIP C	27PF	J	
C355			CC73GCH1H080B	CHIP C	8.0PF	B	
C356			CC73GCH1H0R5B	CHIP C	0.5PF	B	
C357			CC73GCH1H080B	CHIP C	8.0PF	B	
C358,359			CC73GCH1H070B	CHIP C	7.0PF	B	
C360			CC73GCH1H080B	CHIP C	8.0PF	B	
C361-363			CK73GB1H102K	CHIP C	1000PF	K	
C364,365			CC73GCH1H2R5B	CHIP C	2.5PF	B	
C367-369			CK73GB1H102K	CHIP C	1000PF	K	
C370			CK73GB1H471K	CHIP C	470PF	K	
C371			CS77AA0J100M	CHIP TNTL	10UF	6.3WV	
C372			CC73GCH1H150J	CHIP C	15PF	J	
C373-378			CK73GB1H102K	CHIP C	1000PF	K	
C379			CC73GCH1H120J	CHIP C	12PF	J	
C380			CK73GB1H471K	CHIP C	470PF	K	
C381			CK73GB1H102K	CHIP C	1000PF	K	
C382			CK73GB1H103K	CHIP C	0.010UF	K	
C383			CK73GB1H102K	CHIP C	1000PF	K	
C384			CK73GB1H103K	CHIP C	0.010UF	K	
C385			CK73GB1H471K	CHIP C	470PF	K	
C387,388			CK73GB1H102K	CHIP C	1000PF	K	
C390-392			CK73GB1H102K	CHIP C	1000PF	K	
C393			CC73GCH1H120J	CHIP C	12PF	J	
C394			CC73GCH1H150J	CHIP C	15PF	J	
C395			CK73GB1C104K	CHIP C	0.10UF	K	
C396,397			CK73GB1H102K	CHIP C	1000PF	K	

PARTS LIST

TX-RX UNIT (X57-6982-72)

Ref. No.	Address	New parts	Parts No.	Description			Desti-nation
C400			CK73FB1H123K	CHIP C	0.012UF	K	
C403			CK73HB1A104K	CHIP C	0.10UF	K	
C404			CC73HCH1H050C	CHIP C	5.0PF	C	
C406			CC73GCH1H0R3B	CHIP C	0.3PF	B	
C407			CK73GB1H103K	CHIP C	0.010UF	K	
C408,409			CC73HCH1H150G	CHIP C	15PF	G	
C410-412			CK73GB1C104K	CHIP C	0.10UF	K	
C413			CC73GCH1H102J	CHIP C	1000PF	J	
C420,421			CC73GCH1H101J	CHIP C	100PF	J	
C422			CK73GB1H102K	CHIP C	1000PF	K	
C423			CK73FF1C105Z	CHIP C	1.0UF	Z	
C424			CK73GB1H102K	CHIP C	1000PF	K	
C425-428			CC73GCH1H101J	CHIP C	100PF	J	
C429			CK73GB1A105K	CHIP C	1.0UF	K	
C430,431			CC73GCH1H101J	CHIP C	100PF	J	
C432			CK73GB1H102K	CHIP C	1000PF	K	
C433			CK73GB1C104K	CHIP C	0.10UF	K	
C434			CK73GB1H561K	CHIP C	560PF	K	
C435			CK73GB1H102K	CHIP C	1000PF	K	
C436,437			CC73GCH1H101J	CHIP C	100PF	J	
C438			CK73GB1E103K	CHIP C	0.010UF	K	
C439			CK73GB1H102K	CHIP C	1000PF	K	
C440			CK73GB1C104K	CHIP C	0.10UF	K	
C441			CK73FB0J106K	CHIP C	10UF	K	
C442			CK73GB1C104K	CHIP C	0.10UF	K	
C443			CK73GB1H103K	CHIP C	0.010UF	K	
C444			CC73GCH1H390J	CHIP C	39PF	J	
C445			CC73GCH1H150J	CHIP C	15PF	J	
C446			CK73GB1H103K	CHIP C	0.010UF	K	
C447			CK73HB1A563K	CHIP C	0.056UF	K	
C448			CC73GCH1H101J	CHIP C	100PF	J	
C450			CK73FB0J106K	CHIP C	10UF	K	
C451			CK73GB1H103K	CHIP C	0.010UF	K	
C452			CC73GCH1H101J	CHIP C	100PF	J	
C453			CK73GB1C104K	CHIP C	0.10UF	K	
C454			CK73GB1H103K	CHIP C	0.010UF	K	
C455			CS77AB20J470M	CHIP TNTL	47UF	6.3WV	
C457			CK73GB1H471K	CHIP C	470PF	K	
C459			CS77AA1A100M	CHIP TNTL	10UF	10WV	
C460-463			CK73GB1H103K	CHIP C	0.010UF	K	
C464			CK73HB1A563K	CHIP C	0.056UF	K	
C465			CC73GCH1H220J	CHIP C	22PF	J	
C467,468			CK73GB1H103K	CHIP C	0.010UF	K	
C469			CK73GB1C104K	CHIP C	0.10UF	K	
C470			CK73GB1H103K	CHIP C	0.010UF	K	
C472			CK73GB1C104K	CHIP C	0.10UF	K	
C475			CC73GCH1H101J	CHIP C	100PF	J	
C476			CK73GB1C104K	CHIP C	0.10UF	K	
C478			CC73HCH1H101J	CHIP C	100PF	J	
C479,480			CK73GB1H102K	CHIP C	1000PF	K	
C481			CK73HB1H102K	CHIP C	1000PF	K	
C482			CK73FB1A475K	CHIP C	4.7UF	K	
C483			CK73GB1H103K	CHIP C	0.010UF	K	
C484			CK73FB1A475K	CHIP C	4.7UF	K	
C485			CK73FB1H183K	CHIP C	0.018UF	K	
C487			CK73HB1H102K	CHIP C	1000PF	K	
C489			CK73GB1C104K	CHIP C	0.10UF	K	
C490			CK73HB1H102K	CHIP C	1000PF	K	
C491,492			CK73GB1C104K	CHIP C	0.10UF	K	
C493			CK73FB1A475K	CHIP C	4.7UF	K	

Ref. No.	Address	New parts	Parts No.	Description			Desti-nation
C496			CK73GB1C104K	CHIP C	0.10UF	K	
C497			CK73GB1H102K	CHIP C	1000PF	K	
C498			CC73HCH1H101J	CHIP C	100PF	J	
C499			CK73GB1H821K	CHIP C	820PF	K	
C500			CC73HCH1H101J	CHIP C	100PF	J	
C501			CC73GCH1H220J	CHIP C	22PF	J	
C502			CK73HB1H102K	CHIP C	1000PF	K	
C503			CC73GCH1H680J	CHIP C	68PF	J	
C504			CK73HB1H102K	CHIP C	1000PF	K	
C505,506			CK73GB1A105K	CHIP C	1.0UF	K	
C507			CK73GB1C104K	CHIP C	0.10UF	K	
C511-513			CK73GB1C104K	CHIP C	0.10UF	K	
C514			CC73GCH1H820J	CHIP C	82PF	J	
C515,516			CK73HB1H102K	CHIP C	1000PF	K	
C517			CK73GB1H103K	CHIP C	0.010UF	K	
C518			CK73GB1C104K	CHIP C	0.10UF	K	
C519,520			CK73GB1H102K	CHIP C	1000PF	K	
C524			CK73GB1H102K	CHIP C	1000PF	K	
C525,526			CK73GB1C104K	CHIP C	0.10UF	K	
C528			CK73GB1H222K	CHIP C	2200PF	K	
C529			CC73GCH1H470J	CHIP C	47PF	J	
C530			CK73FB0J106K	CHIP C	10UF	K	
C531			CK73GB1H102K	CHIP C	1000PF	K	
C532			CK73GB1E123K	CHIP C	0.012UF	K	
C533			CK73GB1E153K	CHIP C	0.015UF	K	
C534			CK73GB1H102K	CHIP C	1000PF	K	
C535			CK73GB1C683K	CHIP C	0.068UF	K	
C536,537			CK73GB1C104K	CHIP C	0.10UF	K	
C538			CK73GB1H102K	CHIP C	1000PF	K	
C539,540			CS77AA1A100M	CHIP TNTL	10UF	10WV	
C541			CK73GB1C104K	CHIP C	0.10UF	K	
C542			CK73GB1H102K	CHIP C	1000PF	K	
C543,544			CS77AA1A100M	CHIP TNTL	10UF	10WV	
C545			CK73HB1H102K	CHIP C	1000PF	K	
C546			CK73GB1H103K	CHIP C	0.010UF	K	
C547-549			CK73HB1H102K	CHIP C	1000PF	K	
C550			CC73HCH1H101J	CHIP C	100PF	J	
C551-553			CK73HB1H102K	CHIP C	1000PF	K	
C554			CC73HCH1H101J	CHIP C	100PF	J	
C555-557			CK73HB1H102K	CHIP C	1000PF	K	
C558			CC73HCH1H101J	CHIP C	100PF	J	
C559			CK73HB1H102K	CHIP C	1000PF	K	
C560,561			CK73GB1C104K	CHIP C	0.10UF	K	
C562-565			CS77AA1E010M	CHIP TNTL	1.0UF	25WV	
C566			CK73FB1C105K	CHIP C	1.0UF	K	
C567			CC73HCH1H101J	CHIP C	100PF	J	
C568			CK73HB1H102K	CHIP C	1000PF	K	
C570			CK73FB1C105K	CHIP C	1.0UF	K	
C572,573			CK73GB1H102K	CHIP C	1000PF	K	
C574			CE32CL1C220M	CHIP EL	22UF	16WV	
C575			C92-0875-05	ELECTRO	47UF	25WV	
C576			C92-0920-05	ELECTRO	330UF	16WV	
C577			CK73GB1C104K	CHIP C	0.10UF	K	
C578			C92-0875-05	ELECTRO	47UF	25WV	
C579			CK73GB1H102K	CHIP C	1000PF	K	
C580			C92-0875-05	ELECTRO	47UF	25WV	
C581,582			CK73GB1H102K	CHIP C	1000PF	K	
C583			CK73GB1H471K	CHIP C	470PF	K	
C584			CC73GCH1H680J	CHIP C	68PF	J	
C585-587			CC73GCH1H101J	CHIP C	100PF	J	

PARTS LIST

TX-RX UNIT (X57-6982-72)

Ref. No.	Address	New parts	Parts No.	Description	Desti-nation
C588			CK73GB1H102K	CHIP C 1000PF K	
C591			CK73GB1C104K	CHIP C 0.10UF K	
C592,593			CC73GCH1H070D	CHIP C 7.0PF D	
C594			CK73HB1H102K	CHIP C 1000PF K	
C595			CC73GCH1H101J	CHIP C 100PF J	
C596			CK73GB1C104K	CHIP C 0.10UF K	
C597,598			CK73GB1H103K	CHIP C 0.010UF K	
C701			CK73GB1H102K	CHIP C 1000PF K	
C702-704			CC73GCH1H101J	CHIP C 100PF J	
C705-711			CK73GB1H102K	CHIP C 1000PF K	
C712			CC73GCH1H101J	CHIP C 100PF J	
C713			CK73GB1H102K	CHIP C 1000PF K	
C714,715			CC73GCH1H101J	CHIP C 100PF J	
C716,717			CK73GB1H102K	CHIP C 1000PF K	
C718-720			CC73GCH1H101J	CHIP C 100PF J	
C721			CK73GB1H102K	CHIP C 1000PF K	
C722,723			CC73GCH1H101J	CHIP C 100PF J	
C801			C92-0777-05	ELECTRO 1000UF 25WV	
C802			CK73GB1H102K	CHIP C 1000PF K	
C803			CK73GB1E473J	CHIP C 0.047UF J	
C804			CC73GCH1H471J	CHIP C 470PF J	
C805			CK73GB1H102K	CHIP C 1000PF K	
C806			CC73GCH1H101J	CHIP C 100PF J	
C807			CK73GB1E473J	CHIP C 0.047UF J	
C808			CK73GB1C104K	CHIP C 0.10UF K	
C809			CC73GCH1H471J	CHIP C 470PF J	
C810			CK73GB1E473J	CHIP C 0.047UF J	
C811,812			CK73GB1C104K	CHIP C 0.10UF K	
C813,814			CC73GCH1H471J	CHIP C 470PF J	
C815			C92-0870-05	CHIP TNTL 4.7UF 16WV	
C816			CS77AA1A100M	CHIP TNTL 10UF 10WV	
C817			CC73GCH1H471J	CHIP C 470PF J	
C818			CK73GB1H472K	CHIP C 4700PF K	
C819,820			CK73GB1C104K	CHIP C 0.10UF K	
C821			C92-0870-05	CHIP TNTL 4.7UF 16WV	
C822			CC73GCH1H471J	CHIP C 470PF J	
C823			CK73HB1H102K	CHIP C 1000PF K	
C824			CK73GB1H103K	CHIP C 0.010UF K	
C829			CK73GB1H102K	CHIP C 1000PF K	
C831,832			C92-0870-05	CHIP TNTL 4.7UF 16WV	
TC301,302			C05-0396-05	CERAMIC TRIMMER CAPACITOR (8PF)	
CN5			E23-1278-05	TERMINAL	
CN12-14			E23-1278-05	TERMINAL	
CN200-203			E23-1278-05	TERMINAL	
CN301,302			E40-6404-05	PIN ASSY	
CN330			E23-1278-05	TERMINAL	
CN403			E40-6361-05	PIN ASSY	
CN427			E40-6560-05	FLAT CABLE CONNECTOR	
CN428			E40-6582-05	PIN ASSY	
CN429			E40-6558-05	FLAT CABLE CONNECTOR	
CN701			E40-6560-05	FLAT CABLE CONNECTOR	
CN802,803			E23-1260-04	TERMINAL	
CN804			E41-1682-05	PIN ASSY	
CN815			E23-1278-05	TERMINAL	
J401			E11-0425-05	3.5D PHONE JACK (3P)	
J701			E58-0521-05	SUB SOCKET (D)	
F401			F53-0352-05	FUSE (2A)	
F801			F53-0328-05	FUSE (5A)	

Ref. No.	Address	New parts	Parts No.	Description	Desti-nation
CN401			J19-5386-05	HOLDER (LITHIUM CELL)	
CD171			L79-1701-05	TUNING COIL	
CF171			L72-0376-05	CERAMIC FILTER	
CF172			L72-0372-05	CERAMIC FILTER	
L1			L40-1285-92	SMALL FIXED INDUCTOR (120NH)	
L2			L92-0140-05	CHIP FERRITE	
L3			L40-1585-92	SMALL FIXED INDUCTOR (150NH)	
L4			L92-0140-05	CHIP FERRITE	
L5,6			L92-0179-05	CHIP FERRITE	
L7			L34-4638-05	AIR-CORE COIL	
L8		✻	L34-4890-05	AIR-CORE COIL	
L9-12		✻	L34-4888-05	AIR-CORE COIL	
L13			L34-4848-05	AIR-CORE COIL	
L14			L40-2275-92	SMALL FIXED INDUCTOR (22NH)	
L16			L40-3375-92	SMALL FIXED INDUCTOR (33NH)	
L102			L41-2778-14	SMALL FIXED INDUCTOR (27NH)	
L103			L41-5678-14	SMALL FIXED INDUCTOR (56NH)	
L104			L41-3378-14	SMALL FIXED INDUCTOR (33NH)	
L105-107			L41-2778-14	SMALL FIXED INDUCTOR (27NH)	
L108			L92-0140-05	CHIP FERRITE	
L109			L41-3978-14	SMALL FIXED INDUCTOR (39NH)	
L110-113			L34-4566-05	AIR-CORE COIL	
L114			L40-1875-92	SMALL FIXED INDUCTOR (18NH)	
L171			L41-2278-14	SMALL FIXED INDUCTOR (22NH)	
L172			L41-1878-14	SMALL FIXED INDUCTOR (18NH)	
L173,174			L39-1498-05	TOROIDAL COIL	
L175			L92-0140-05	CHIP FERRITE	
L176			L39-1498-05	TOROIDAL COIL	
L177			L41-2785-14	SMALL FIXED INDUCTOR (270NH)	
L178,179			L41-3988-14	SMALL FIXED INDUCTOR (390NH)	
L180			L40-6875-92	SMALL FIXED INDUCTOR (68NH)	
L181			L40-1001-86	SMALL FIXED INDUCTOR (10UH)	
L182			L40-1085-92	SMALL FIXED INDUCTOR (100NH)	
L183,184			L41-3988-14	SMALL FIXED INDUCTOR (390NH)	
L185			L40-2285-92	SMALL FIXED INDUCTOR (220NH)	
L186			L40-1001-86	SMALL FIXED INDUCTOR (10UH)	
L187			L40-1085-92	SMALL FIXED INDUCTOR (100NH)	
L188			L40-8281-86	SMALL FIXED INDUCTOR (0.82UH)	
L189			L40-1091-86	SMALL FIXED INDUCTOR (1.0UH)	
L190			L40-8265-92	SMALL FIXED INDUCTOR (8.2NH)	
L193			L40-4775-92	SMALL FIXED INDUCTOR (47NH)	
L252			L33-1468-05	SMALL FIXED INDUCTOR	
L301			L41-5695-39	SMALL FIXED INDUCTOR (5.6UH)	
L302			L92-0140-05	CHIP FERRITE	
L303			L41-4763-14	SMALL FIXED INDUCTOR (4.7NH)	
L304		✻	L41-3963-14	SMALL FIXED INDUCTOR (3.9NH)	
L305,306			L41-3378-14	SMALL FIXED INDUCTOR (33NH)	
L307		✻	L41-3963-14	SMALL FIXED INDUCTOR (3.9NH)	
L308			L41-4763-14	SMALL FIXED INDUCTOR (4.7NH)	
L309,310			L41-1095-39	SMALL FIXED INDUCTOR (1.0UH)	
L312			L41-1098-40	SMALL FIXED INDUCTOR (1000NH)	
L313			L34-4608-15	AIR-CORE COIL	
L314		✻	L34-4610-15	AIR-CORE COIL	
L315			L41-1098-40	SMALL FIXED INDUCTOR (1000NH)	
L317			L41-1098-40	SMALL FIXED INDUCTOR (1000NH)	
L318			L40-1085-92	SMALL FIXED INDUCTOR (100NH)	
L319			L40-8275-92	SMALL FIXED INDUCTOR (82NH)	
L320			L40-3375-92	SMALL FIXED INDUCTOR (33NH)	
L321			L92-0140-05	CHIP FERRITE	

PARTS LIST

TX-RX UNIT (X57-6982-72)

Ref. No.	Address	New parts	Parts No.	Description	Destination
L328,329			L41-1098-40	SMALL FIXED INDUCTOR (1000NH)	
L401,402			L92-0138-05	CHIP FERRITE	
L403-407			L92-0140-05	CHIP FERRITE	
L408			L92-0138-05	CHIP FERRITE	
L409			L92-0140-05	CHIP FERRITE	
L410,411			L92-0179-05	CHIP FERRITE	
L701,702			L92-0140-05	CHIP FERRITE	
X171			L77-1762-05	CRYSTAL RESONATOR (44.395MHZ)	
X301			L77-1952-05	TCXO (16.8MHZ)	
X401			L77-1802-05	CRYSTAL RESONATOR (32768HZ)	
X403			L77-1965-05	CRYSTAL RESONATOR (3.6864MHZ)	
X404			L77-1950-05	CRYSTAL RESONATOR (11.0592MHZ)	
XF171			L71-0618-05	MCF (44.85MHZ)	
CP401			R90-0740-05	MULTIPLE RESISTOR	
CP402-417			RK75HA1J102J	CHIP-COM 1.0K J 1/16W	
R1			RK73GB2A271J	CHIP R 270 J 1/10W	
R2			RK73GB2A180J	CHIP R 18 J 1/10W	
R3			RK73GB2A271J	CHIP R 270 J 1/10W	
R4			RK73GB2A333J	CHIP R 33K J 1/10W	
R5			RK73GB2A682J	CHIP R 6.8K J 1/10W	
R6			RK73GB2A181J	CHIP R 180 J 1/10W	
R7			RK73GB2A6R8J	CHIP R 6.8 J 1/10W	
R8			RK73GB2A471J	CHIP R 470 J 1/10W	
R9			RK73GB2A220J	CHIP R 22 J 1/10W	
R10			RK73GB2A272J	CHIP R 2.7K J 1/10W	
R11			RK73GB2A561J	CHIP R 560 J 1/10W	
R12			RK73GB2A150J	CHIP R 15 J 1/10W	
R13			RK73GB2A331J	CHIP R 330 J 1/10W	
R14			RK73GB2A000J	CHIP R 0.0 J 1/10W	
R15			RK73FB2B271J	CHIP R 270 J 1/8W	
R17			RK73FB2B180J	CHIP R 18 J 1/8W	
R18			RK73FB2B271J	CHIP R 270 J 1/8W	
R19			RK73GB2A151J	CHIP R 150 J 1/10W	
R21			RK73GB2A122J	CHIP R 1.2K J 1/10W	
R22			RK73GB2A102J	CHIP R 1.0K J 1/10W	
R23			RK73GB2A682J	CHIP R 6.8K J 1/10W	
R25			RK73RB2H121J	CHIP R 120 J 1/2W	
R26			RK73GB2A332J	CHIP R 3.3K J 1/10W	
R27			RK73GB2A823J	CHIP R 82K J 1/10W	
R28			RK73GB2A822J	CHIP R 8.2K J 1/10W	
R30			R92-1061-05	JUMPER REST 0 OHM	
R31			RK73GB2A000J	CHIP R 0.0 J 1/10W	
R33			RK73GB2A154J	CHIP R 150K J 1/10W	
R71			RK73GB2A563J	CHIP R 56K J 1/10W	
R72			RK73GB2A333J	CHIP R 33K J 1/10W	
R75			RK73GB2A393J	CHIP R 39K J 1/10W	
R76-78			RK73GB2A104J	CHIP R 100K J 1/10W	
R79			RK73GB2A184J	CHIP R 180K J 1/10W	
R81,82			RK73GB2A104J	CHIP R 100K J 1/10W	
R84,85			RK73GB2A104J	CHIP R 100K J 1/10W	
R86			RK73GB2A394J	CHIP R 390K J 1/10W	
R87,88			RK73GB2A104J	CHIP R 100K J 1/10W	
R89			RK73GB2A473J	CHIP R 47K J 1/10W	
R90			RK73GB2A394J	CHIP R 390K J 1/10W	
R111			RK73GB2A000J	CHIP R 0.0 J 1/10W	
R115			RK73GB2A472J	CHIP R 4.7K J 1/10W	
R116			RK73GB2A102J	CHIP R 1.0K J 1/10W	
R117			RK73GB2A152J	CHIP R 1.5K J 1/10W	
R119			RK73GB2A151J	CHIP R 150 J 1/10W	

Ref. No.	Address	New parts	Parts No.	Description	Destination
R120			RK73GB2A120J	CHIP R 12 J 1/10W	
R121-124			RK73GB2A104J	CHIP R 100K J 1/10W	
R125			RK73GB2A821J	CHIP R 820 J 1/10W	
R126			RK73GB2A5R6J	CHIP R 5.6 J 1/10W	
R127			RK73GB2A821J	CHIP R 820 J 1/10W	
R129			RK73GB2A104J	CHIP R 100K J 1/10W	
R130			RK73GB2A000J	CHIP R 0.0 J 1/10W	
R132			RK73GB2A104J	CHIP R 100K J 1/10W	
R171			RK73GB2A821J	CHIP R 820 J 1/10W	
R172			RK73GB2A5R6J	CHIP R 5.6 J 1/10W	
R173			RK73GB2A821J	CHIP R 820 J 1/10W	
R174			RK73GB2A680J	CHIP R 68 J 1/10W	
R175			RK73GB2A222J	CHIP R 2.2K J 1/10W	
R176			RK73GB2A470J	CHIP R 47 J 1/10W	
R177			RK73GB2A102J	CHIP R 1.0K J 1/10W	
R178			RK73GB2A000J	CHIP R 0.0 J 1/10W	
R179			RK73GB2A102J	CHIP R 1.0K J 1/10W	
R180			RK73GB2A821J	CHIP R 820 J 1/10W	
R181			RK73GB2A681J	CHIP R 680 J 1/10W	
R182			RK73GB2A332J	CHIP R 3.3K J 1/10W	
R183			RK73GB2A680J	CHIP R 68 J 1/10W	
R184			RK73GB2A5R6J	CHIP R 5.6 J 1/10W	
R185			RK73GB2A821J	CHIP R 820 J 1/10W	
R187			RK73GB2A332J	CHIP R 3.3K J 1/10W	
R188			RK73GB2A680J	CHIP R 68 J 1/10W	
R189			RK73GB2A100J	CHIP R 10 J 1/10W	
R190			RK73GB2A153J	CHIP R 15K J 1/10W	
R191,192			RK73GB2A223J	CHIP R 22K J 1/10W	
R193			RK73GB2A473J	CHIP R 47K J 1/10W	
R194,195			RK73GB2A223J	CHIP R 22K J 1/10W	
R196			RK73GB2A153J	CHIP R 15K J 1/10W	
R197,198			RK73GB2A334J	CHIP R 330K J 1/10W	
R199			RK73GB2A560J	CHIP R 56 J 1/10W	
R200			RK73GB2A332J	CHIP R 3.3K J 1/10W	
R202			RK73GB2A332J	CHIP R 3.3K J 1/10W	
R203			RK73GB2A182J	CHIP R 1.8K J 1/10W	
R204			RK73GB2A222J	CHIP R 2.2K J 1/10W	
R205			RK73GB2A332J	CHIP R 3.3K J 1/10W	
R206			RK73GB2A681J	CHIP R 680 J 1/10W	
R207			RK73GB2A473J	CHIP R 47K J 1/10W	
R208			RK73GB2A392J	CHIP R 3.9K J 1/10W	
R209			RK73GB2A100J	CHIP R 10 J 1/10W	
R210			RK73GB2A272J	CHIP R 2.7K J 1/10W	
R212			RK73GB2A104J	CHIP R 100K J 1/10W	
R217			RK73GB2A000J	CHIP R 0.0 J 1/10W	
R221			RK73GB2A473J	CHIP R 47K J 1/10W	
R222			RK73GB2A102J	CHIP R 1.0K J 1/10W	
R251			RK73GB2A182J	CHIP R 1.8K J 1/10W	
R252			RK73GB2A472J	CHIP R 4.7K J 1/10W	
R253			RK73GB2A103J	CHIP R 10K J 1/10W	
R254,255			RK73GB2A000J	CHIP R 0.0 J 1/10W	
R256			RK73GB2A124J	CHIP R 120K J 1/10W	
R257			RK73GB2A123J	CHIP R 12K J 1/10W	
R258			RK73GB2A220J	CHIP R 22 J 1/10W	
R291-294			RK73GB2A000J	CHIP R 0.0 J 1/10W	
R300			RK73GB2A103J	CHIP R 10K J 1/10W	
R302			RK73GB2A560J	CHIP R 56 J 1/10W	
R303			RK73GB2A561J	CHIP R 560 J 1/10W	
R304			RK73GB2A680J	CHIP R 68 J 1/10W	
R305			RK73GB2A560J	CHIP R 56 J 1/10W	

PARTS LIST

TX-RX UNIT (X57-6982-72)

Ref. No.	Address	New parts	Parts No.	Description				Desti-nation
R306			RK73GB2A333J	CHIP R	33K	J	1/10W	
R307			RK73GB2A000J	CHIP R	0.0	J	1/10W	
R308			RK73GB2A392J	CHIP R	3.9K	J	1/10W	
R309			RK73GB2A221J	CHIP R	220	J	1/10W	
R310			RK73GB2A101J	CHIP R	100	J	1/10W	
R311,312			RK73GB2A102J	CHIP R	1.0K	J	1/10W	
R313			RK73GB2A472J	CHIP R	4.7K	J	1/10W	
R314,315			RK73GB2A223J	CHIP R	22K	J	1/10W	
R316			RK73GB2A124J	CHIP R	120K	J	1/10W	
R317			RK73GB2A000J	CHIP R	0.0	J	1/10W	
R318		✻	R92-3626-05	METAL-R	3.3K	J	1/4W	
R319			RK73GB2A220J	CHIP R	22	J	1/10W	
R320			RK73GB2A270J	CHIP R	27	J	1/10W	
R321			RK73GB2A103J	CHIP R	10K	J	1/10W	
R322			RK73GB2A000J	CHIP R	0.0	J	1/10W	
R323			RK73GB2A102J	CHIP R	1.0K	J	1/10W	
R324			RK73GB2A000J	CHIP R	0.0	J	1/10W	
R325			RK73GB2A154J	CHIP R	150K	J	1/10W	
R326			RK73GB2A821J	CHIP R	820	J	1/10W	
R327			RK73GB2A101J	CHIP R	100	J	1/10W	
R328			RK73GB2A223J	CHIP R	22K	J	1/10W	
R329			RK73GB2A472J	CHIP R	4.7K	J	1/10W	
R330			RK73GB2A101J	CHIP R	100	J	1/10W	
R331			RK73GB2A000J	CHIP R	0.0	J	1/10W	
R332			RK73GB2A101J	CHIP R	100	J	1/10W	
R333-335			RK73GB2A000J	CHIP R	0.0	J	1/10W	
R336			RK73GB2A102J	CHIP R	1.0K	J	1/10W	
R337,338			RK73GB2A103J	CHIP R	10K	J	1/10W	
R339			RK73GB2A104J	CHIP R	100K	J	1/10W	
R340			RK73GB2A101J	CHIP R	100	J	1/10W	
R341,342			RK73GB2A181J	CHIP R	180	J	1/10W	
R343			RK73GB2A472J	CHIP R	4.7K	J	1/10W	
R344			RK73GB2A101J	CHIP R	100	J	1/10W	
R345,346			RK73GB2A221J	CHIP R	220	J	1/10W	
R347			RK73GB2A472J	CHIP R	4.7K	J	1/10W	
R348			RK73GB2A103J	CHIP R	10K	J	1/10W	
R349			RK73GB2A123J	CHIP R	12K	J	1/10W	
R350			RK73GB2A273J	CHIP R	27K	J	1/10W	
R351			RK73GB2A472J	CHIP R	4.7K	J	1/10W	
R352			RK73GB2A330J	CHIP R	33	J	1/10W	
R353			RK73GB2A472J	CHIP R	4.7K	J	1/10W	
R354			RK73GB2A391J	CHIP R	390	J	1/10W	
R355			RK73GB2A331J	CHIP R	330	J	1/10W	
R356			RK73GB2A103J	CHIP R	10K	J	1/10W	
R357			RK73GB2A123J	CHIP R	12K	J	1/10W	
R358			RK73GB2A153J	CHIP R	15K	J	1/10W	
R359			RK73GB2A151J	CHIP R	150	J	1/10W	
R360			RK73GB2A331J	CHIP R	330	J	1/10W	
R361			RK73GB2A391J	CHIP R	390	J	1/10W	
R362			RK73GB2A000J	CHIP R	0.0	J	1/10W	
R365,366			RK73GB2A222J	CHIP R	2.2K	J	1/10W	
R367			RK73GB2A332J	CHIP R	3.3K	J	1/10W	
R368			RK73GB2A000J	CHIP R	0.0	J	1/10W	
R369			RK73GB2A223J	CHIP R	22K	J	1/10W	
R370			RK73GB2A102J	CHIP R	1.0K	J	1/10W	
R372			RK73GB2A000J	CHIP R	0.0	J	1/10W	
R375			RK73GB2A102J	CHIP R	1.0K	J	1/10W	
R376			RK73GB2A473J	CHIP R	47K	J	1/10W	
R377			RK73GB2A000J	CHIP R	0.0	J	1/10W	
R379,380			RK73GB2A000J	CHIP R	0.0	J	1/10W	

Ref. No.	Address	New parts	Parts No.	Description				Desti-nation
R401			RK73HH1J362D	CHIP R	3.6K	D	1/16W	
R402			RK73HH1J512D	CHIP R	5.1K	D	1/16W	
R403			RK73GB2A101J	CHIP R	100	J	1/10W	
R404			RK73GB2A105J	CHIP R	1.0M	J	1/10W	
R405,406			RK73HB1J474J	CHIP R	470K	J	1/16W	
R407			RK73HB1J103J	CHIP R	10K	J	1/16W	
R408,409			RK73HB1J471J	CHIP R	470	J	1/16W	
R410			RK73HB1J103J	CHIP R	10K	J	1/16W	
R411,412			RK73HB1J474J	CHIP R	470K	J	1/16W	
R414			RK73HB1J103J	CHIP R	10K	J	1/16W	
R418,419			RK73HB1J473J	CHIP R	47K	J	1/16W	
R420			RK73HB1J334J	CHIP R	330K	J	1/16W	
R421,422			RK73HB1J473J	CHIP R	47K	J	1/16W	
R423			RK73HB1J000J	CHIP R	0.0	J	1/16W	
R424-427			RK73HB1J102J	CHIP R	1.0K	J	1/16W	
R428			RK73HB1J000J	CHIP R	0.0	J	1/16W	
R429,430			RK73HB1J471J	CHIP R	470	J	1/16W	
R431			RK73HB1J000J	CHIP R	0.0	J	1/16W	
R432			RK73HB1J102J	CHIP R	1.0K	J	1/16W	
R434			RK73HB1J473J	CHIP R	47K	J	1/16W	
R435			RK73HB1J102J	CHIP R	1.0K	J	1/16W	
R437			RK73HB1J000J	CHIP R	0.0	J	1/16W	
R439			RK73HB1J000J	CHIP R	0.0	J	1/16W	
R440-444			RK73HB1J102J	CHIP R	1.0K	J	1/16W	
R445,446			RK73GB2A103J	CHIP R	10K	J	1/10W	
R447			RK73HB1J474J	CHIP R	470K	J	1/16W	
R448			RK73HB1J102J	CHIP R	1.0K	J	1/16W	
R449			RK73HB1J474J	CHIP R	470K	J	1/16W	
R450			RK73HB1J102J	CHIP R	1.0K	J	1/16W	
R451			RK73HB1J474J	CHIP R	470K	J	1/16W	
R452			RK73HB1J102J	CHIP R	1.0K	J	1/16W	
R453			RK73HB1J474J	CHIP R	470K	J	1/16W	
R454			RK73HB1J102J	CHIP R	1.0K	J	1/16W	
R455,456			RK73HB1J471J	CHIP R	470	J	1/16W	
R457			RK73HB1J473J	CHIP R	47K	J	1/16W	
R458,459			RK73HB1J474J	CHIP R	470K	J	1/16W	
R461			RK73HB1J474J	CHIP R	470K	J	1/16W	
R465			RK73GB2A473J	CHIP R	47K	J	1/10W	
R466,467			RK73HB1J000J	CHIP R	0.0	J	1/16W	
R468			RK73HB1J473J	CHIP R	47K	J	1/16W	
R469			RK73HB1J102J	CHIP R	1.0K	J	1/16W	
R470			RK73GB2A102J	CHIP R	1.0K	J	1/10W	
R471,472			RK73HB1J102J	CHIP R	1.0K	J	1/16W	
R473			RK73HB1J473J	CHIP R	47K	J	1/16W	
R474-476			RK73HB1J474J	CHIP R	470K	J	1/16W	
R477,478			RK73GB2A000J	CHIP R	0.0	J	1/10W	
R481			RK73HB1J474J	CHIP R	470K	J	1/16W	
R482			RK73HB1J473J	CHIP R	47K	J	1/16W	
R483-486			RK73GB2A000J	CHIP R	0.0	J	1/10W	
R487			RK73GB2A185J	CHIP R	1.8M	J	1/10W	
R488,489			RK73GB2A000J	CHIP R	0.0	J	1/10W	
R490			RK73GB2A184J	CHIP R	180K	J	1/10W	
R491			RK73GB2A000J	CHIP R	0.0	J	1/10W	
R492			RK73GB2A684J	CHIP R	680K	J	1/10W	
R494,495			RK73GB2A472J	CHIP R	4.7K	J	1/10W	
R496			RK73GB2A104J	CHIP R	100K	J	1/10W	
R497			RK73GB2A332J	CHIP R	3.3K	J	1/10W	
R498			RK73GB2A274J	CHIP R	270K	J	1/10W	
R499			RK73GB2A124J	CHIP R	120K	J	1/10W	
R500			RK73GB2A000J	CHIP R	0.0	J	1/10W	

PARTS LIST

TX-RX UNIT (X57-6982-72)

Ref. No.	Address	New parts	Parts No.	Description				Destination
R501			RK73GB2A472J	CHIP R	4.7K	J	1/10W	
R502			RK73GB2A103J	CHIP R	10K	J	1/10W	
R503			RK73GB2A154J	CHIP R	150K	J	1/10W	
R504			RK73GB2A103J	CHIP R	10K	J	1/10W	
R505			RK73GB2A683J	CHIP R	68K	J	1/10W	
R506			RK73GB2A224J	CHIP R	220K	J	1/10W	
R507			RK73GB2A154J	CHIP R	150K	J	1/10W	
R508			RK73GB2A102J	CHIP R	1.0K	J	1/10W	
R509			RK73GB2A333J	CHIP R	33K	J	1/10W	
R511			RK73HB1J152J	CHIP R	1.5K	J	1/16W	
R512			RK73GB2A153J	CHIP R	15K	J	1/10W	
R513			RK73GB2A564J	CHIP R	560K	J	1/10W	
R514			RK73GB2A183J	CHIP R	18K	J	1/10W	
R515			RK73GB2A104J	CHIP R	100K	J	1/10W	
R517			RK73GB2A563J	CHIP R	56K	J	1/10W	
R519			RK73GB2A104J	CHIP R	100K	J	1/10W	
R520			RK73GB2A000J	CHIP R	0.0	J	1/10W	
R521			RK73GB2A473J	CHIP R	47K	J	1/10W	
R522			RK73GB2A104J	CHIP R	100K	J	1/10W	
R523			RK73GB2A154J	CHIP R	150K	J	1/10W	
R524			RK73GB2A103J	CHIP R	10K	J	1/10W	
R525			RK73HB1J152J	CHIP R	1.5K	J	1/16W	
R526			RK73GB2A274J	CHIP R	270K	J	1/10W	
R527			RK73GB2A392J	CHIP R	3.9K	J	1/10W	
R528			RK73GB2A183J	CHIP R	18K	J	1/10W	
R529			RK73GB2A684J	CHIP R	680K	J	1/10W	
R530			RK73GB2A563J	CHIP R	56K	J	1/10W	
R531			RK73GB2A103J	CHIP R	10K	J	1/10W	
R532			RK73GB2A102J	CHIP R	1.0K	J	1/10W	
R533			RK73GB2A104J	CHIP R	100K	J	1/10W	
R534			RK73GB2A103J	CHIP R	10K	J	1/10W	
R535			RK73GB2A394J	CHIP R	390K	J	1/10W	
R536			RK73GB2A153J	CHIP R	15K	J	1/10W	
R537,538			RK73GB2A104J	CHIP R	100K	J	1/10W	
R539			RK73GB2A393J	CHIP R	39K	J	1/10W	
R540			RK73GB2A473J	CHIP R	47K	J	1/10W	
R541			RK73GB2A000J	CHIP R	0.0	J	1/10W	
R542			RK73GB2A154J	CHIP R	150K	J	1/10W	
R544			RK73GB2A472J	CHIP R	4.7K	J	1/10W	
R545			RK73GB2A103J	CHIP R	10K	J	1/10W	
R548			RK73GB2A823J	CHIP R	82K	J	1/10W	
R550			RK73GB2A472J	CHIP R	4.7K	J	1/10W	
R552			RK73GB2A103J	CHIP R	10K	J	1/10W	
R553			RK73GB2A472J	CHIP R	4.7K	J	1/10W	
R554			RK73GB2A563J	CHIP R	56K	J	1/10W	
R555			RK73GB2A123J	CHIP R	12K	J	1/10W	
R556			RK73GB2A563J	CHIP R	56K	J	1/10W	
R557			RK73GB2A472J	CHIP R	4.7K	J	1/10W	
R558			RK73GB2A224J	CHIP R	220K	J	1/10W	
R559			RK73GB2A000J	CHIP R	0.0	J	1/10W	
R565			RK73GB2A000J	CHIP R	0.0	J	1/10W	
R566			RK73GB2A105J	CHIP R	1.0M	J	1/10W	
R567			RK73GB2A394J	CHIP R	390K	J	1/10W	
R568			RK73GB2A124J	CHIP R	120K	J	1/10W	
R569			RK73GB2A104J	CHIP R	100K	J	1/10W	
R570			RK73GB2A154J	CHIP R	150K	J	1/10W	
R571			RK73GB2A124J	CHIP R	120K	J	1/10W	
R572			RK73HB1J000J	CHIP R	0.0	J	1/16W	
R573			RK73GB2A332J	CHIP R	3.3K	J	1/10W	
R574,575			RK73HB1J000J	CHIP R	0.0	J	1/16W	

Ref. No.	Address	New parts	Parts No.	Description				Destination
R576			RK73GB2A224J	CHIP R	220K	J	1/10W	
R577,578			RK73HB1J000J	CHIP R	0.0	J	1/16W	
R579			RK73GB2A223J	CHIP R	22K	J	1/10W	
R580,581			RK73GB2A472J	CHIP R	4.7K	J	1/10W	
R582			RK73GB2A105J	CHIP R	1.0M	J	1/10W	
R583,584			RK73GB2A000J	CHIP R	0.0	J	1/10W	
R585			RK73GB2A184J	CHIP R	180K	J	1/10W	
R586			RK73GB2A000J	CHIP R	0.0	J	1/10W	
R587			RK73GB2A154J	CHIP R	150K	J	1/10W	
R588			RK73GB2A472J	CHIP R	4.7K	J	1/10W	
R589			RK73GB2A471J	CHIP R	470	J	1/10W	
R590			RK73GB2A000J	CHIP R	0.0	J	1/10W	
R591			RK73HB1J000J	CHIP R	0.0	J	1/16W	
R592			RK73GB2A000J	CHIP R	0.0	J	1/10W	
R594			RK73GB2A681J	CHIP R	680	J	1/10W	
R595			RK73GB2A274J	CHIP R	270K	J	1/10W	
R596			RK73GB2A000J	CHIP R	0.0	J	1/10W	
R597			RK73GB2A224J	CHIP R	220K	J	1/10W	
R598			RK73GB2A472J	CHIP R	4.7K	J	1/10W	
R599			RK73GB2A184J	CHIP R	180K	J	1/10W	
R600			RK73GB2A472J	CHIP R	4.7K	J	1/10W	
R601			RK73GB2A474J	CHIP R	470K	J	1/10W	
R602			RK73GB2A105J	CHIP R	1.0M	J	1/10W	
R603,604			RK73GB2A000J	CHIP R	0.0	J	1/10W	
R606			RK73GB2A000J	CHIP R	0.0	J	1/10W	
R607			RK73GB2A274J	CHIP R	270K	J	1/10W	
R608			RK73GB2A184J	CHIP R	180K	J	1/10W	
R609			RK73GB2A223J	CHIP R	22K	J	1/10W	
R610			RK73GB2A154J	CHIP R	150K	J	1/10W	
R611			RK73GB2A103J	CHIP R	10K	J	1/10W	
R612,613			RK73GB2A104J	CHIP R	100K	J	1/10W	
R614			RK73HB1J000J	CHIP R	0.0	J	1/16W	
R615,616			RK73GB2A000J	CHIP R	0.0	J	1/10W	
R617			RK73GB2A104J	CHIP R	100K	J	1/10W	
R618			RK73GB2A224J	CHIP R	220K	J	1/10W	
R619			RK73GB2A104J	CHIP R	100K	J	1/10W	
R620			RK73GB2A224J	CHIP R	220K	J	1/10W	
R621,622			RK73FB2B000J	CHIP R	0.0	J	1/8W	
R623,624			RK73GB2A473J	CHIP R	47K	J	1/10W	
R625			RK73GB2A472J	CHIP R	4.7K	J	1/10W	
R629,630			RK73FB2B000J	CHIP R	0.0	J	1/8W	
R632			RK73GB2A473J	CHIP R	47K	J	1/10W	
R633			RK73FB2B000J	CHIP R	0.0	J	1/8W	
R636			RK73FB2B000J	CHIP R	0.0	J	1/8W	
R638,639			RK73GB2A472J	CHIP R	4.7K	J	1/10W	
R641,642			RK73GB2A472J	CHIP R	4.7K	J	1/10W	
R643			RK73GB2A471J	CHIP R	470	J	1/10W	
R644			RK73GB2A102J	CHIP R	1.0K	J	1/10W	
R645			RK73GB2A562J	CHIP R	5.6K	J	1/10W	
R648			RK73GB2A222J	CHIP R	2.2K	J	1/10W	
R651			RK73GB2A000J	CHIP R	0.0	J	1/10W	
R652			RK73GB2A820J	CHIP R	82	J	1/10W	
R653			RK73GB2A2R2J	CHIP R	2.2	J	1/10W	
R654			RK73FB2B000J	CHIP R	0.0	J	1/8W	
R655			RK73GB2A000J	CHIP R	0.0	J	1/10W	
R657			RK73HB1J472J	CHIP R	4.7K	J	1/16W	
R658-662			RK73HB1J000J	CHIP R	0.0	J	1/16W	
R664			RK73HB1J105J	CHIP R	1.0M	J	1/16W	
R665			RK73GB2A000J	CHIP R	0.0	J	1/10W	
R666			RK73GB2A104J	CHIP R	100K	J	1/10W	

PARTS LIST

TX-RX UNIT (X57-6982-72)

Ref. No.	Address	New parts	Parts No.	Description	Desti-nation
R667			RK73GB2A333J	CHIP R 33K J 1/10W	
R669-671			RK73GB2A472J	CHIP R 4.7K J 1/10W	
R672			RK73GB2A334J	CHIP R 330K J 1/10W	
R673			RK73GB2A183J	CHIP R 18K J 1/10W	
R675			RK73GB2A000J	CHIP R 0.0 J 1/10W	
R701-705			RK73GB2A473J	CHIP R 47K J 1/10W	
R706-710			RK73GB2A471J	CHIP R 470 J 1/10W	
R711-713			RK73GB2A473J	CHIP R 47K J 1/10W	
R714-720			RK73GB2A471J	CHIP R 470 J 1/10W	
R721,722			RK73GB2A273J	CHIP R 27K J 1/10W	
R801			RK73GB2A224J	CHIP R 220K J 1/10W	
R802			RK73GB2A334J	CHIP R 330K J 1/10W	
R803			RK73GB2A103J	CHIP R 10K J 1/10W	
R805			RK73GB2A471J	CHIP R 470 J 1/10W	
R806,807			RK73GB2A103J	CHIP R 10K J 1/10W	
R808,809			RK73GB2A473J	CHIP R 47K J 1/10W	
R811-813			RK73GB2A472J	CHIP R 4.7K J 1/10W	
R814			RK73GB2A473J	CHIP R 47K J 1/10W	
R815			RK73GB2A683J	CHIP R 68K J 1/10W	
R816			RK73HB1J473J	CHIP R 47K J 1/16W	
R819			RK73GB2A563J	CHIP R 56K J 1/10W	
R820			RK73GB2A472J	CHIP R 4.7K J 1/10W	
R821			RK73HB1J105J	CHIP R 1.0M J 1/16W	
R822			RK73GB2A104J	CHIP R 100K J 1/10W	
R823			RK73GB2A473J	CHIP R 47K J 1/10W	
R824			RK73GB2A103J	CHIP R 10K J 1/10W	
R825			RK73HB1J102J	CHIP R 1.0K J 1/16W	
D1			02DZ5.6F-X,Y	ZENER DIODE	
D2			L7091CER	DIODE	
D3,4			L407CDB	DIODE (50V/1W)	
D5			L7091CER	DIODE	
D6-8			HSM88AS-E	DIODE	
D11			1SV283F	VARIABLE CAPACITANCE DIODE	
D103-106			1SV283F	VARIABLE CAPACITANCE DIODE	
D171,172			DAN235E	DIODE	
D173			RB706F-40	DIODE	
D174			MA2S111-F	DIODE	
D251			1SS388F	DIODE	
D301,302			MA2S077-F	DIODE	
D304,305			MA2S077-F	DIODE	
D308,309			BB664	VARIABLE CAPACITANCE DIODE	
D311			BB664	VARIABLE CAPACITANCE DIODE	
D313			BB664	VARIABLE CAPACITANCE DIODE	
D314			1SV278F	VARIABLE CAPACITANCE DIODE	
D315,316			HVC131	DIODE	
D402-404			1SS388F	DIODE	
D405			EMZ6.8N	ZENER DIODE	
D406			02DZ5.1F-Y	ZENER DIODE	
D407			RB706F-40	DIODE	
D408,409			MA3J742	DIODE	
D412-414			DA204U	DIODE	
D416			DAN202U	DIODE	
D417-423			1SS388F	DIODE	
D603,604			1SS388F	DIODE	
D701			02DZ18F-X,Y	ZENER DIODE	
D702,703			1SS355	DIODE	
D704-708			DA204U	DIODE	
D709,710			02DZ18F-X,Y	ZENER DIODE	
D711-713			DA204U	DIODE	

Ref. No.	Address	New parts	Parts No.	Description	Desti-nation
D714			02DZ18F-X,Y	ZENER DIODE	
D801			22ZR-10D	SURGE ABSORBER	
D802			DSA3A1	DIODE	
D804			02DZ18F-X,Y	ZENER DIODE	
D805			02CZ9.1(X,Y)F	ZENER DIODE	
IC1	2A	*	RA30H2127M101	MOS-IC	
IC71,72			TA75W01FUF	MOS-IC	
IC171			SPM5001	MOS-IC	
IC172			TA31136FNG	MOS-IC	
IC251			MAX5026EUT+T	MOS-IC	
IC301			ADF4111BCP7	MOS-IC	
IC302			TC7S66FUF	MOS-IC	
IC401			CAT24C256WIGC	ROM IC	
IC402			RV5C386A	MOS-IC	
IC403			BU4094BCFV	MOS-IC	
IC404			30625MGP169GU	MICROPROCESSOR IC	
IC405			AT29C040A-90TU	ROM IC	
IC406-409			TC75W51FUF	MOS-IC	
IC410			M62364FP-F	MOS-IC	
IC411			LMC7101BIM5	MOS-IC	
IC412			TC75W51FUF	MOS-IC	
IC413			TC7MZ4053FK	MOS-IC	
IC414			TC75W51FUF	MOS-IC	
IC415			AQUA-L	MOS-IC	
IC416			ADM202EARNZ	MOS-IC	
IC417	2A		TA7252AP	ANALOGUE IC	
IC801			S-80942CNNB-G	MOS-IC	
IC802			XC61CN5002NR	MOS-IC	
IC803			TA7808FQ	ANALOGUE IC	
IC804			TA7805FQ	MOS-IC	
IC805			NJM78L05UA-ZB	BI-POLAR IC	
IC807			XC6201P502PR	MOS-IC	
Q1			2SC5108(Y)F	TRANSISTOR	
Q2			2SC5455-A	TRANSISTOR	
Q3			DTC114EE	DIGITAL TRANSISTOR	
Q72			2SK1824-A	FET	
Q73			DTC114EE	DIGITAL TRANSISTOR	
Q103			2SC3357-A	TRANSISTOR	
Q171,172			2SC5108(Y)F	TRANSISTOR	
Q173			DTA114EE	DIGITAL TRANSISTOR	
Q174			DTC144EE	DIGITAL TRANSISTOR	
Q175			2SC4617(Q)	TRANSISTOR	
Q176			2SK1824-A	FET	
Q177			DTC144EE	DIGITAL TRANSISTOR	
Q178			DTA144EE	DIGITAL TRANSISTOR	
Q180			DTC144EE	DIGITAL TRANSISTOR	
Q251			2SC4617(S)	TRANSISTOR	
Q301			2SC5108(Y)F	TRANSISTOR	
Q302,303			2SC4116(BL)F	TRANSISTOR	
Q305			DTC144EE	DIGITAL TRANSISTOR	
Q306,307			2SK508NV(K52)	FET	
Q308,309			2SC4116(GR)F	TRANSISTOR	
Q310			DTC114EE	DIGITAL TRANSISTOR	
Q311			2SC5108(Y)F	TRANSISTOR	
Q312			2SC4617(S)	TRANSISTOR	
Q313			2SC5108(Y)F	TRANSISTOR	
Q314			DTA144EE	DIGITAL TRANSISTOR	
Q402			DTC114YE	DIGITAL TRANSISTOR	
Q405			DTA114EE	DIGITAL TRANSISTOR	
Q406			HN1J02FUF	FET	

If a part reference number is listed in a shaded box, that part does not come with the PCB.

PARTS LIST

TX-RX UNIT (X57-6982-72)

Ref. No.	Address	New parts	Parts No.	Description	Desti-nation
Q409			DTC363EU	DIGITAL TRANSISTOR	
Q410			2SC4116(Y)F	TRANSISTOR	
Q411			2SA1586(Y,GR)F	TRANSISTOR	
Q412			2SK1824-A	FET	
Q413,414			2SJ243-A	FET	
Q415			HN1L02FU(F)	FET	
Q416,417			2SJ243-A	FET	
Q418			DTC114EE	DIGITAL TRANSISTOR	
Q419			DTC363EU	DIGITAL TRANSISTOR	
Q421			DTA144EE	DIGITAL TRANSISTOR	
Q701,702			2SD2114K(W)	TRANSISTOR	
Q801			2SC2873(Y)F	TRANSISTOR	
Q802			DTC114EE	DIGITAL TRANSISTOR	
Q803-805			12A02CH	TRANSISTOR	
Q806-809			DTC114EE	DIGITAL TRANSISTOR	
Q810			2SJ645	FET	
Q811			DTC114EE	DIGITAL TRANSISTOR	
Q812			DTC114TE	DIGITAL TRANSISTOR	
TH1			S1R104J475H	THERMISTOR	
TH171			S1R473J475H	THERMISTOR	

Ref. No.	Address	New parts	Parts No.	Description	Desti-nation

EXPLODED VIEW

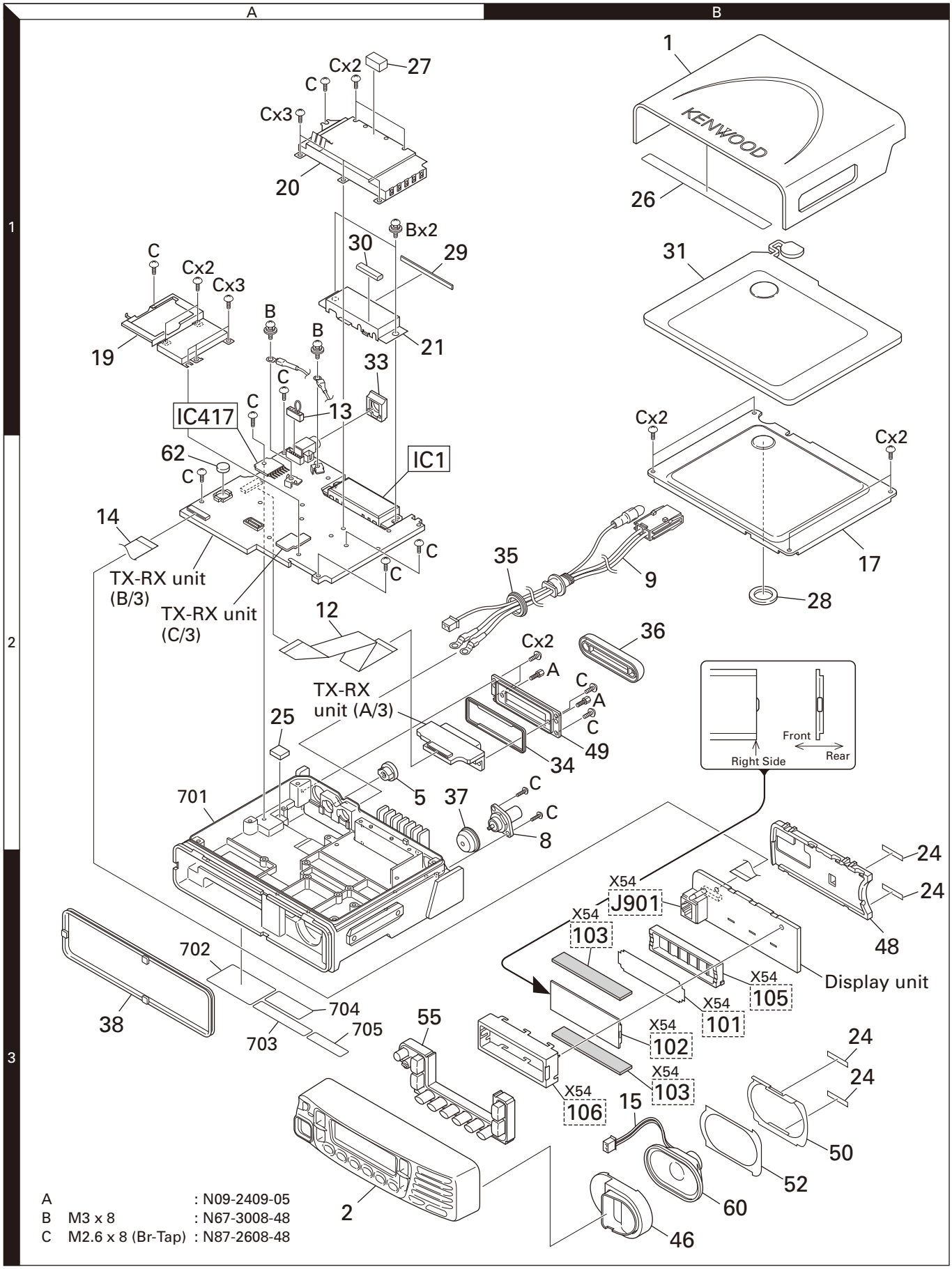

Parts with the exploded numbers larger than 700 are not supplied.
If a part reference number is listed in a box on the exploded view of the PCB, that part does not come with the PCB.
These parts must be ordered separately.

PACKING

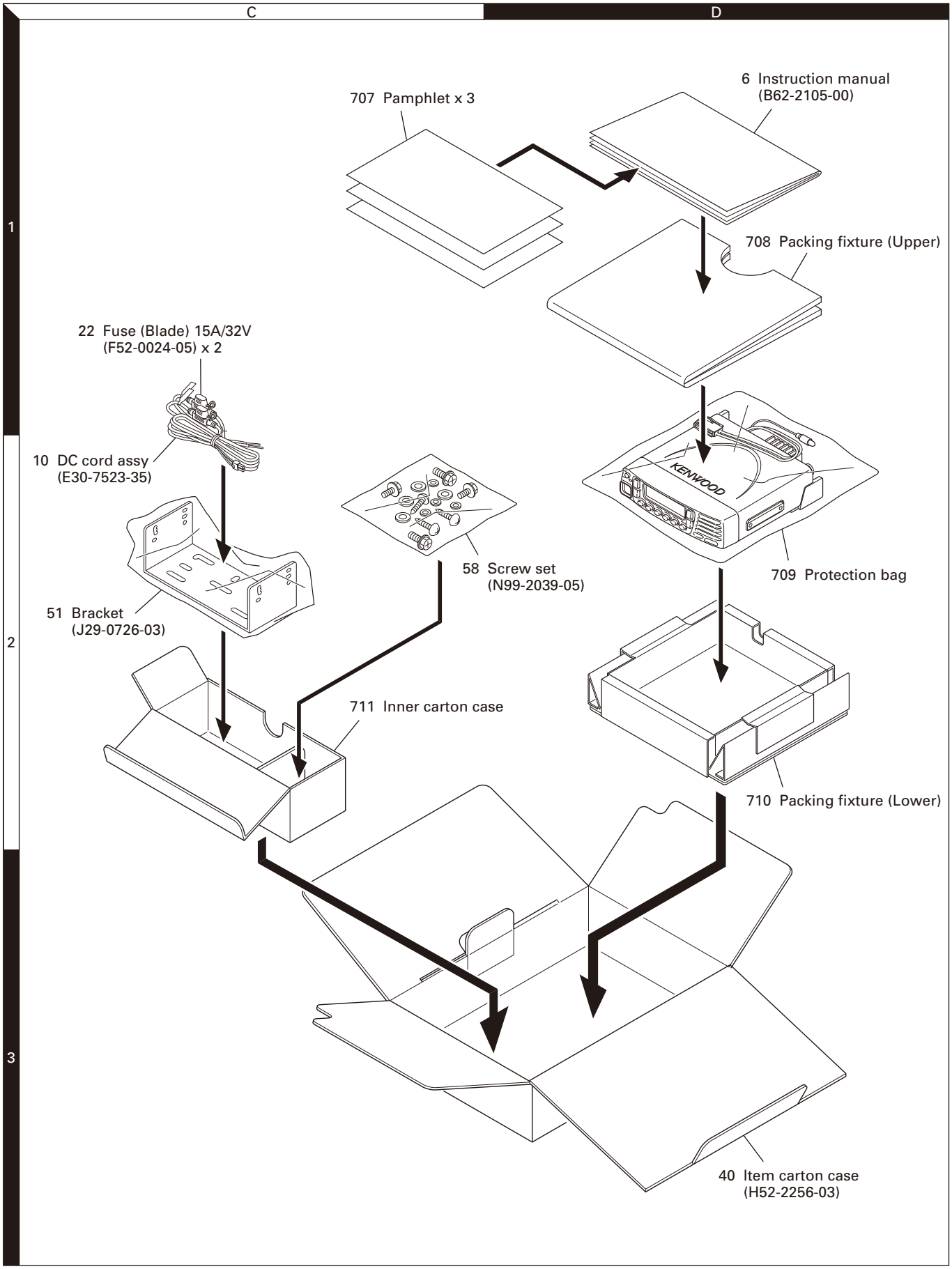

Parts with the exploded numbers larger than 700 are not supplied.

ADJUSTMENT

Controls

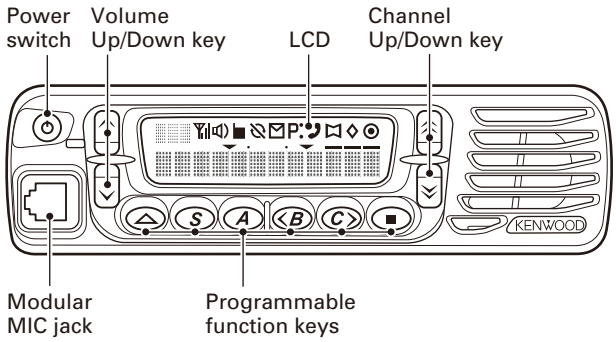

Panel Test Mode

■ Test mode operation features

This transceiver has a test mode. ***To enter test mode, press and hold the [A] key while turning the transceiver power ON. Before the transceiver enters test mode, the frequency version information appears on the LCD momentarily.*** Test mode can be inhibited by programming. To exit test mode, turn the transceiver power OFF. The following functions are available in test mode.

■ Key operation

Key	"FNC" not appears	
	Function	**Display**
[S]	Shifts to Panel tuning mode	-
[A]	Function on	"FNC" appears
[B]	MSK 1200bps and 2400bps	2400bps: icon appears
[C]	Test signaling CH up	Signaling No.
[⌃⌃]/[⌄⌄]	Test frequency CH up/down	Channel No.
[⌃]/[⌄]	Volume up/down	-
[⏶]	Squelch on/off	
[■]	Narrow/Wide	Narrow: "n", Wide: "w"
Microphone key		
[PTT]	Transmit	-
[0] to [9] and [A], [B], [C], [D], [#], [*]	Use as the DTMF keypad. If a key is pressed during transmission, the DTMF corresponding to the key that was presses is sent.	-

Key	"FNC" appears	
	Function	**Display**
[S]	High power / Low power	Low: icon appears
[A]	Function off	-
[B]	Compander on/off	On: icon appears
[C]	Beat shift on/off	On: icon appears
[⌃⌃]/[⌄⌄]	Function off	-
[⌃]/[⌄]	Function off	-
[⏶]	Squelch level 0	On: P icon appears
[■]	LCD all lights	LCD all point appears
Microphone key		
[PTT]	Transmit	-
[0] to [9] and [A], [B], [C], [D], [#], [*]	Function off	-

Note:
If a [S], [A], [B], [C] key is pressed during transmission, the DTMF corresponding to the key that was pressed is sent.

• LED indicator

Red LED Lights during transmission.
Green LED Lights when there is carrier.

• Sub LCD indicator

"FNC" Appears at function on.

• LCD display in panel test mode

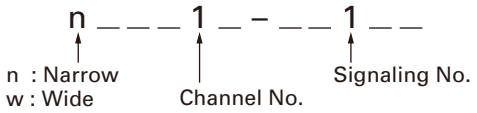

■ Frequency and Signaling

The transceiver has been adjusted for the frequencies shown in the following table. When required, readjust them following the adjustment procedure to obtain the frequencies you want in actual operation.

• Test frequency

CH	RX (MHz)	TX (MHz)
1	243.55000	243.60000
2	217.05000	217.10000
3	269.95000	269.90000
4	243.50000	243.50000
5	243.70000	243.70000
6	243.90000	243.90000
7~16	-	-

ADJUSTMENT

• Test signaling

No.	RX	TX
1	None	None
2	None	100Hz Square Wave
3	Skip	
4	QT: 67.0Hz	QT: 67.0Hz
5	QT: 151.4Hz	QT: 151.4Hz
6	QT: 210.7Hz	QT: 210.7Hz
7	QT: 254.1Hz	QT: 254.1Hz
8	DQT: D023N	DQT: D023N
9	DQT: D754I	DQT: D754I
10	DTMF: 159D	DTMF: 159D
11	None	DTMF Code 9
12	Skip	
13	Skip	
14	None	Single Tone: 1000Hz
15	Skip	
16	None	MSK
17	MSK: Data: 0x230960C6AAAA CRC: 0xC4D7	MSK: Data: 0x230960C6AAAA CRC: 0xC4D7

Panel Tuning Mode

■ Preparations for tuning the transceiver

Before attempting to tune the transceiver, connect the unit to a suitable power supply.

Whenever the transmitter is turned, the transceiver must be connected to a suitable dummy load (i.e. power meter).

The speaker output connector must be terminated with a 4Ω dummy load and connected to an AC voltmeter and an audio distortion meter or a SINAD measurement meter at all times during tuning.

■ Transceiver tuning
(To place transceiver in tuning mode)

Press [S] key, now in tuning mode. Use [B] key to write tuning data through tuning modes, and [⌃]/[⌄] to adjust tuning requirements (1 to 256 appears on LCD).

Use [C] key to select the adjustment item through tuning modes. Use [A] key to adjust 3 or 5 reference level adjustments, and use [■] key to switch between Wide/Narrow.

Channel appears on LCD. Set channel according to tuning requirements.

• LCD display in panel tuning mode

n __ B A L ___ 2 5 6

n : Narrow
w : Wide

Adjustment item

Adjustment value (1~256)

■ Key operation

Key	Function	
	Push	Hold (1 second)
[S]	End of panel tuning mode	-
[A]	To enter 3 or 5 reference level adjustments	-
[B]	Writes the adjustment value	-
[C]	Go to next adjustment item	Back to last adjustment item
[⌃]/[⌄]	Adjustment value up/down	Continuation up/down
[⌃]/[⌄]	Volume level up/down	Continuation up/down
[⌓]	Squelch on/off	-
[■]	Selects Narrow, Wide	-

■ 3 or 5 reference level adjustments frequency

Tuning point	RX (MHz)	TX (MHz)
Low	217.05000	217.10000
Low’	230.35000	230.40000
Center	243.55000	243.60000
High’	256.85000	256.90000
High	269.95000	269.90000

■ Adjustment item and Display
(✳✳✳: 1~256, MSK only: 1~64)

Order	Adjustment item	Display
1	Frequency	F R E Q _ _ ✳✳✳
2	Shift 1	S H F T 1 _ ✳✳✳
3	Shift 2	S H F T 2 _ ✳✳✳
4	Max high power	MHPWR_✳✳✳
5	Max low power	MLPWR_✳✳✳
6	High power	HPWR_ _ ✳✳✳
7	Low power	LPWR_ _ ✳✳✳
8	DQT balance	B A L _ _ _ ✳✳✳
9	Max deviation	D E V _ _ _ ✳✳✳
10	QT deviation	Q T _ _ _ _ ✳✳✳
11	DQT deviation	D Q T _ _ _ ✳✳✳
12	DTMF deviation	D T M F _ _ ✳✳✳
13	MSK deviation	M S K _ _ _ _ ✳✳
14	Tone deviation	T O N E _ _ ✳✳✳
15	Sensitivity 1	S E N S 1 _ ✳✳✳
16	Squelch	S Q L _ _ _ ✳✳✳
17	Low RSSI	L R S S I _ ✳✳✳
18	Squelch tight	S Q L T _ _ ✳✳✳
19	High RSSI	H R S S I _ ✳✳✳

ADJUSTMENT

■ Flow chart

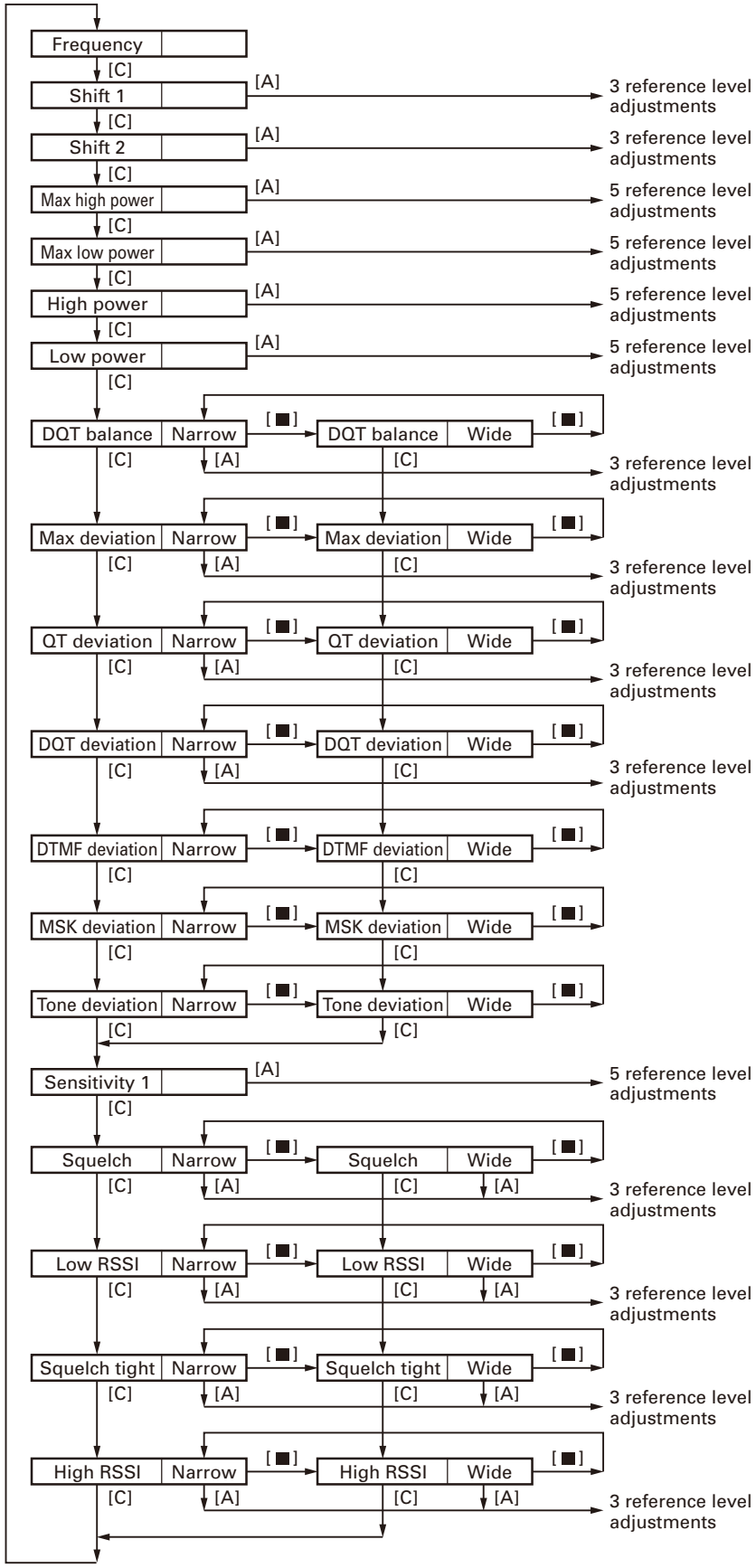

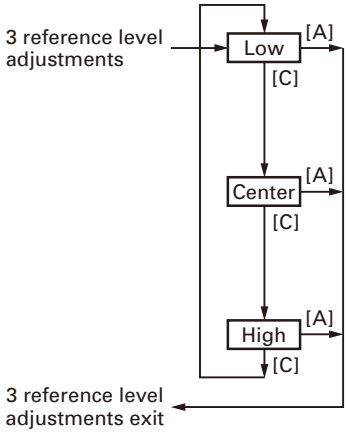

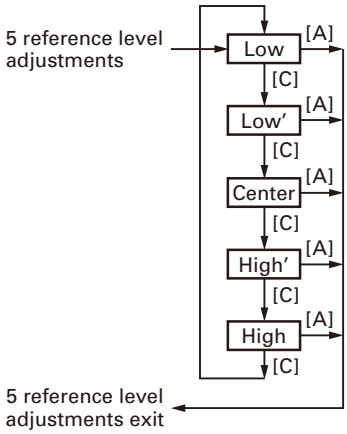

ADJUSTMENT

Test Equipment Required for Alignment

Test Equipment	Major Specifications	
1. Standard Signal Generator (SSG)	Frequency Range Modulation Output	217 to 270MHz Frequency modulation and external modulation 0.1μV to greater than 1mV
2. Power Meter	Input Impedance Operation Frequency Measurement Range	50Ω 217 to 270MHz or more Vicinity of 50W
3. Deviation Meter	Frequency Range	217 to 270MHz
4. Digital Volt Meter (DVM)	Measuring Range Input Impedance	1 to 20V DC High input impedance for minimum circuit loading
5. Oscilloscope		DC through 30MHz
6. High Sensitivity Frequency Counter	Frequency Range Frequency Stability	10Hz to 600MHz 0.2ppm or less
7. Ammeter		13A or more
8. AF Volt Meter (AF VTVM)	Frequency Range Voltage Range	50Hz to 10kHz 3mV to 3V
9. Audio Generator (AG)	Frequency Range Output	50Hz to 5kHz 0 to 1V
10. Distortion Meter	Capability Input Level	3% or less at 1kHz 50mV to 10Vrms
11. Voltmeter	Measuring Range Input Impedance	10 to 1.5V DC or less 50kΩ/V or greater
12. 4Ω Dummy Load		Approx. 4Ω, 20W
13. Regulated Power Supply		13.2V, approx. 20A (adjustable from 9 to 20V) Useful if ammeter equipped

Test cable for microphone input (E30-3360-28)

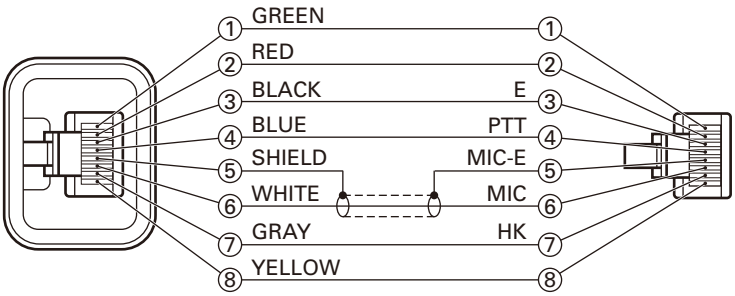

Tuning cable (E30-3383-05)

Adapter cable (E30-3383-05) is required for injecting an audio if PC tuning is used.
See "PC Mode" section for the connection.

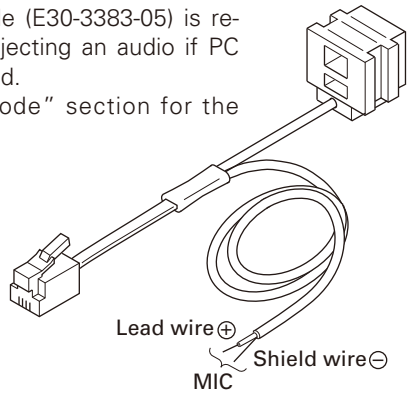

MIC connector (Front panel view)

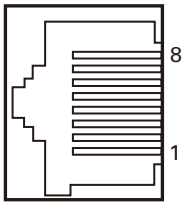

1 : BLC
2 : +B
3 : GND
4 : PTT/TXD (PC serial data from radio)
5 : MICE
6 : MIC
7 : HOOK/RXD (PC serial data to radio)
8 : DM

ADJUSTMENT

Common Section

Item	Condition	Measurement			Adjustment			Specifications / Remarks
		Test-equipment	Unit	Terminal	Unit	Parts	Method	
1. Setting	1) Power supply voltage DC power supply terminal : 13.2V 2) SSG standard modulation [Wide] MOD: 1kHz, DEV: 3kHz [Narrow] MOD: 1kHz, DEV: 1.5kHz							
2. VCO lock voltage • RX	**[Panel test mode]** 1) CH-Sig: 3-1	Power meter	Rear panel	ANT	TX-RX (B/3)	TC301	8.0V	±0.1V
	2) CH-Sig: 2-1	DVM	TX-RX (B/3)	CV			Check	1.9V±0.5V
• TX	**[Panel tuning mode] LPWR*** 3) CH-Sig: 3-1 PTT: ON				TX-RX (B/3)	TC302	8.0V	±0.1V
	4) CH-Sig: 2-1 PTT: ON						Check	1.2V±0.5V

* TX can be continued on unlock condition in panel tuning mode.

Transmitter Section

Item	Condition	Measurement			Adjustment			Specifications / Remarks
		Test-equipment	Unit	Terminal	Unit	Parts	Method	
1. Frequency adjust	1) Adj item: [FREQ] Adjust: [✱✱✱] PTT: ON	f. counter	Rear panel	ANT	Front panel	[⌃],[⌄]	Center frequency ±50Hz	**Note:** After replacing the VCXO (X301) align frequency.
2. Frequency shift 1 adjust	1) Adj item: [SHFT1] Adjust: [✱✱✱] 2) Adj item: [L SHFT1] → [C SHFT1] → [H SHFT1] Adjust: [✱✱✱] PTT: ON						[L SHFT1] Low frequency+1.25kHz [C SHFT1] Center frequency+1.25kHz [H SHFT1] High frequency+1.25kHz	±50Hz
3. Frequency shift 2 adjust	1) Adj item: [SHFT2] Adjust: [✱✱✱] 2) Adj item: [L SHFT2] → [C SHFT2] → [H SHFT2] Adjust: [✱✱✱] PTT: ON						[L SHFT2] Low frequency+2.5kHz [C SHFT2] Center frequency+2.5kHz [H SHFT2] High frequency+2.5kHz	±50Hz
4. Max high power adjust	1) Adj item: [MHPWR] Adjust: [✱✱✱] 2) Adj item: [L MHPWR] → [L' MHPWR] → [C MHPWR] → [H' MHPWR] → [H MHPWR] Adjust: [✱✱✱] PTT: ON	Power meter					28W	±3W **CAUTION!** Do not attempt to adjust the transceiver's transmit output power beyond its specifications. If the transceiver is adjusted beyond the specifications, it may cause deterioration of the parts reliability and the output power may be lowered suddenly and unstable. The transceiver may be also extremely hot.

ADJUSTMENT

Item	Condition	Measurement			Adjustment			Specifications / Remarks
		Test-equipment	Unit	Terminal	Unit	Parts	Method	
5. Max low power adjust	1) Adj item: [MLPWR] Adjust: [✳✳✳] 2) Adj item: [L MLPWR] → [L' MLPWR] → [C MLPWR] → [H' MLPWR] → [H MLPWR] Adjust: [✳✳✳] PTT: ON	Power meter	Rear panel	ANT	Front panel	[⌃],[⌄]	15W	±1W **CAUTION!** Do not attempt to adjust the transceiver's transmit output power beyond its specifications. If the transceiver is adjusted beyond the specifications, it may cause deterioration of the parts reliability and the output power may be lowered suddenly and unstable. The transceiver may be also extremely hot.
6. High power adjust	1) Adj item: [HPWR] Adjust: [✳✳✳] 2) Adj item: [L HPWR] → [L' HPWR] → [C HPWR] → [H' HPWR] → [H HPWR] Adjust: [✳✳✳] PTT: ON	Power meter Ammeter					25W	±1W 9A or less
7. High power check	**[Panel test mode]** 1) CH-Sig: 1-1 PTT: ON						Check	22.5~27.5W 9A or less
	2) CH-Sig: 2-1 PTT: ON							
	3) CH-Sig: 3-1 PTT: ON							
8. Low power adjust	1) Adj item: [LPWR] Adjust: [✳✳✳] 2) Adj item: [L LPWR] → [L' LPWR] → [C LPWR] → [H' LPWR] → [H LPWR] Adjust: [✳✳✳] PTT: ON				Front panel	[⌃],[⌄]	5.0W	±0.5W 5A or less
9. Low power check	**[Panel test mode]** 1) CH-Sig: 1-1 Set low power (Push [S]) PTT: ON						Check	3.5~6.5W 5A or less
	2) CH-Sig: 2-1 PTT: ON							
	3) CH-Sig: 3-1 PTT: ON							

ADJUSTMENT

Item	Condition	Measurement			Adjustment			Specifications / Remarks
		Test-equipment	Unit	Terminal	Unit	Parts	Method	
10. DQT balance adjust • Narrow	1) Adj item: [n BAL] Adjust: [✳✳✳] Deviation meter filter LPF: 3kHz HPF: OFF 2) Adj item: [nL BAL] → [nC BAL] → [nH BAL] Adjust: [✳✳✳] PTT: ON	Power meter Deviation meter Oscilloscope AG AF VTVM	Rear panel Front panel	ANT Modular MIC jack	Front panel	[⌃],[⌄]	Make the demodulation waves into square waves.	
• Wide	3) Adj item: [w BAL] Adjust: [✳✳✳] PTT: ON							
11. Max DEV adjust • Narrow	1) Adj item: [n DEV] Adjust: [✳✳✳] AG: 1kHz/50mV at MIC terminal Deviation meter filter LPF: 15kHz HPF: OFF 2) Adj item: [nL DEV] → [nC DEV] → [nH DEV] Adjust: [✳✳✳] PTT: ON						2.10kHz (According to the larger +, –)	±0.05kHz
• Wide	3) Adj item: [w DEV] Adjust: [✳✳✳] PTT: ON						4.20kHz (According to the larger +, –)	±0.10kHz
12. MIC sensitivity check (Wide only)	**[Panel test mode]** 1) CH-Sig: 1-1 AG: 1kHz/5mV at MIC terminal PTT: ON						Check	2.5~3.5kHz
13. QT deviation adjust • Narrow	1) Adj item: [n QT] Adjust: [✳✳✳] Deviation meter filter LPF: 3kHz HPF: OFF 2) Adj item: [nL QT] → [nC QT] → [nH QT] Adjust: [✳✳✳] PTT: ON				Front panel	[⌃],[⌄]	0.35kHz	±0.05kHz
• Wide	3) Adj item: [w QT] Adjust: [✳✳✳] PTT: ON						0.75kHz	±0.10kHz
14. DQT deviation adjust • Narrow	1) Adj item: [n DQT] Adjust: [✳✳✳] Deviation meter filter LPF: 3kHz HPF: OFF 2) Adj item: [nL DQT] → [nC DQT] → [nH DQT] Adjust: [✳✳✳] PTT: ON						0.35kHz	±0.05kHz
• Wide	3) Adj item: [w DQT] Adjust: [✳✳✳] PTT: ON						0.75kHz	±0.10kHz

ADJUSTMENT

Item	Condition	Measurement			Adjustment			Specifications / Remarks
		Test-equipment	Unit	Terminal	Unit	Parts	Method	
15. DTMF deviation adjust • Narrow	1) Adj item: [n DTMF] Adjust: [✳✳✳] Deviation meter filter LPF: 15kHz HPF: OFF PTT: ON	Power meter Deviation meter Oscilloscope AG AF VTVM	Rear panel Front panel	ANT Modular MIC jack	Front panel	[⌃],[⌄]	1.5kHz	±0.1kHz
• Wide	2) Adj item: [w DTMF] Adjust: [✳✳✳] PTT: ON						3.0kHz	±0.1kHz
16. MSK deviation adjust • Narrow	1) Adj item: [n MSK] Adjust: [✳✳] Deviation meter filter LPF: 15kHz HPF: OFF PTT: ON						1.5kHz	±0.1kHz
• Wide	2) Adj item: [w MSK] Adjust: [✳✳] PTT: ON						3.0kHz	±0.1kHz
17. TONE deviation adjust • Narrow	1) Adj item: [n TONE] Adjust: [✳✳✳] Deviation meter filter LPF: 15kHz HPF: OFF PTT: ON						1.5kHz	±0.1kHz
• Wide	2) Adj item: [w TONE] Adjust: [✳✳✳] PTT: ON						3.0kHz	±0.1kHz

Receiver Section

Item	Condition	Measurement			Adjustment			Specifications / Remarks
		Test-equipment	Unit	Terminal	Unit	Parts	Method	
1. Sensitivity adjust	1) Adj item: [SENS1] Adjust: [✳✳✳] 2) Adj item: [L SENS1] → [L' SENS1] → [C SENS1] → [H' SENS1] → [H SENS1] Adjust: [✳✳✳]	SSG AF VTVM Oscilloscope	Rear panel	ANT EXT. SP	Front panel	[⌃],[⌄]	Enter the following adjustment values to the transceiver by pressing [⌃] and [⌄] keys. [L SENS1]: 135 [L' SENS1]: 155 [C SENS1]: 175 [H' SENS1]: 200 [H SENS1]: 240 After setting the adjustment value, press [B] key. The adjustment value will be stored in memory.	**Note:** After replacing the EEPROM (IC401) align sensitivity.

ADJUSTMENT

Item	Condition	Measurement			Adjustment			Specifications / Remarks
		Test-equipment	Unit	Terminal	Unit	Parts	Method	
2. Sensitivity check	**[Panel test mode]** 1) CH-Sig: 1-1 SSG output Wide: –117dBm (0.32μV) (MOD: 1kHz/±3kHz) Narrow: –116dBm (0.35μV) (MOD: 1kHz/±1.5kHz)	SSG AF VTVM Oscilloscope	Rear panel	ANT EXT. SP			Check	12dB SINAD or more
3. Squelch (Preset) adjust • Narrow	1) Adj item: [n SQL] Adjust: [✱✱✱] SSG output: 12dB SINAD level (MOD: 1kHz/±1.5kHz)						After input signal from SSG, press [B] key. That numeric will be stored in memory.	After adjusting SQL, check SQL open/close. SSG 12dB SINAD level + 4dB : Open SSG 12dB SINAD level – 6dB : Close [nC SQL] MOD 1kHz/±1.5kHz [wC SQL] MOD 1kHz/±3.0kHz
	2) Adj item: [nL SQL] → [nC SQL] → [nH SQL] Adjust: [✱✱✱]							
• Wide	3) Adj item: [w SQL] Adjust: [✱✱✱] SSG output: 12dB SINAD level (MOD: 1kHz/±3.0kHz)							
	4) Adj item: [wL SQL] → [wC SQL] → [wH SQL] Adjust: [✱✱✱]							
4. Low RSSI adjust • Narrow	1) Adj item: [n LRSSI] Adjust: [✱✱✱] SSG output: 12dB SINAD level (MOD: 1kHz/±1.5kHz)						After input signal from SSG, press [B] key. That numeric will be stored in memory.	The following erroneous performance may occur if any irregular RSSI adjustment, such as pressing the [B] key assigned for determination when it is the ANT OPEN state, is performed. • The antenna bar (Y) cannot appear correctly. • Scan does not stop.
	2) Adj item: [nL LRSSI] → [nC LRSSI] → [nH LRSSI] Adjust: [✱✱✱]							
• Wide	3) Adj item: [w LRSSI] Adjust: [✱✱✱] SSG output: 12dB SINAD level (MOD: 1kHz/±3.0kHz)							
	4) Adj item: [wL LRSSI] → [wC LRSSI] → [wH LRSSI] Adjust: [✱✱✱]							
5. Squelch (Tight) adjust • Narrow	1) Adj item: [n SQLT] Adjust: [✱✱✱] SSG output : 12dB SINAD+5dB level (MOD: 1kHz/±1.5kHz)						After input signal from SSG, press [B] key. That numeric will be stored in memory.	After adjusting SQL, check SQL open/close. SSG 12dB SINAD level +10dB : Open SSG 12dB SINAD level : Close [nC SQLT] MOD 1kHz/±1.5kHz [wC SQLT] MOD 1kHz/±3.0kHz
	2) Adj item: [nL SQLT] → [nC SQLT] → [nH SQLT] Adjust: [✱✱✱]							
• Wide	3) Adj item: [w SQLT] Adjust: [✱✱✱] SSG output : 12dB SINAD+5dB level (MOD: 1kHz/±3.0kHz)							
	4) Adj item: [wL SQLT] → [wC SQLT] → [wH SQLT] Adjust: [✱✱✱]							

ADJUSTMENT

Item	Condition	Measurement			Adjustment			Specifications / Remarks
		Test-equipment	Unit	Terminal	Unit	Parts	Method	
6. High RSSI adjust • Narrow	1) Adj item: [n HRSSI] Adjust: [✳✳✳] SSG output: –70dBm (MOD: 1kHz/±1.5kHz)	SSG AF VTVM Oscilloscope	Rear panel	ANT EXT. SP			After input signal from SSG, press [B] key. That numeric will be stored in memory.	The following erroneous performance may occur if any irregular RSSI adjustment, such as pressing the [B] key assigned for determination when it is the ANT OPEN state, is performed. • The antenna bar cannot appear correctly. • Scan does not stop.
	2) Adj item: [nL HRSSI] → [nC HRSSI] → [nH HRSSI] Adjust: [✳✳✳]							
• Wide	3) Adj item: [w HRSSI] Adjust: [✳✳✳] SSG output: –70dBm (MOD: 1kHz/±3.0kHz)							
	4) Adj item: [wL HRSSI] → [wC HRSSI] → [wH HRSSI] Adjust: [✳✳✳]							

Adjustment Points

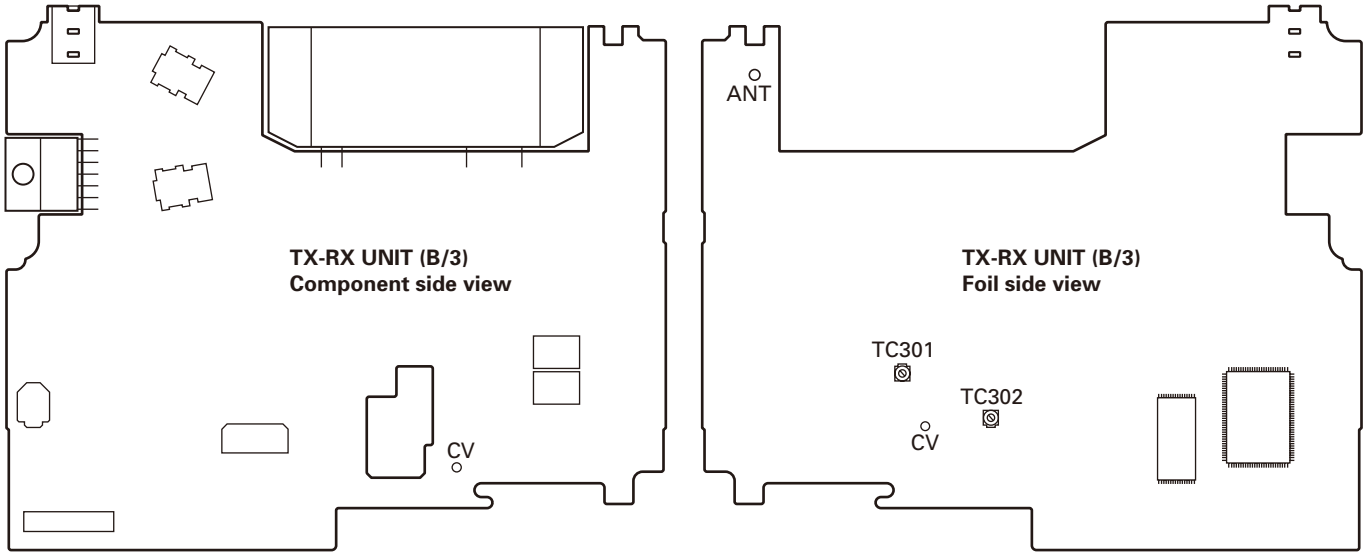

TERMINAL FUNCTION

Display unit (X54-3480-10)

Pin No.	Name	Description
CN901 (to internal speaker)		
1	GND	Ground
2	SPO	Speaker output
CN902 (to TX-RX unit B/3 CN429)		
1	SPO	Speaker input
2	SPO	Speaker input
3	SPO	Speaker input
4	SPO	Speaker input
5	SPO	Speaker input
6	SPO	Speaker input
7	GND	Ground
8	8C	8V input
9	SB	Power input of switched power supply
10	SB	Power input of switched power supply
11	NC	No connection
12	PSW	Detection signal output of power switch
13	GND	Ground
14	GND	Ground
15	MIC	MIC signal output
16	ME	MIC ground
17	GND	Ground
18	PSENS	Detection signal output of display unit
19	RST2	Reset signal input
20	GND	Ground
21	GND	Ground
22	GND	Ground
23	GND	Ground
24	SHIFT/MODEL	Control signal input of beat-shift function
25	NC	No connection
26	5C	5V output
27	TXD	Serial data signal input
28	RXD	Serial data signal output
29	GND	Ground
30	GND	Ground
J901 (MIC jack)		
1	BLC	MIC backlight control
2	SB	DC 13.2V±15%, 200mA typ.
3	E	Ground
4	PTT/TXD	PTT : PTT input, TXD : Serial data output
5	ME	MIC ground
6	MIC	MIC signal input
7	HOOK/RXD	HOOK : Hook detection, RXD : Serial data input
8	DM	MIC data detection

TX-RX unit (X57-6982-72) (A/3)

Pin No.	Name	Description
CN701 (to TX-RX unit B/3 CN427)		
1	AUXIO6	AUX input/output 6
2	AUXIO7	AUX input/output 7
3	AUXIO1	AUX input/output 1
4	AUXIO2	AUX input/output 2
5	RXD2	Serial data output 2
6	AUXIO3	AUX input/output 3
7	TXD2	Serial data input 2
8	AUXIO4	AUX input/output 4
9	AUXIO8	AUX input/output 8
10	AUXIO5	AUX input/output 5
11	AUXIO9	AUX input/output 9
12	AUXO1	AUX input 1
13	TXD1	Serial data input 1
14	AUXO2	AUX input 2
15	RXD1	Serial data output 1
16	GND	Ground
17	ME	MIC ground
18	MI2	External MIC output
19	DEO	Detected signal input
20	GND	Ground
21	5C	5V
22	DI	Data signal output
23	AFO	RX filtered audio input
24	SB	Power input after power switch
25	SB	Power input after power switch
26	SB	Power input after power switch
27	SB	Power input after power switch
28	SB	Power input after power switch
29	SB	Power input after power switch
30	NC	No connection
J701 (ACC 25-pin)		
1	NC	No connection

TERMINAL FUNCTION

Pin No.	Name	Description
2	RXD1	Serial data input 1. RS-232C level. Input voltage range : ±30V max. L≤0.4V, H≥2.4V, Zi≥5kΩ
3	TXD1	Serial data output 1. RS-232C level. L≤–5V, H≥5V/3kΩ load, Zo≤2kΩ
4	AUXI/O9	AUX input/output 9. Active low with 47kΩ pull-up to 5V
5	DI	Data signal input. 2.0Vp-p typ.
6	MI2	External MIC input (DC-coupled)
7	GND	Ground
8	AUXI/O8	AUX input/output 8. Same as AUXI/O9
9	TXD2	Serial data output 2. TTL level. L≤0.7V, H≥4.2V/25kΩ load, Zo≤1kΩ
10	RXD2	Serial data input 2. TTL level. Input voltage range : +5/0V max. L≤0.8V, H≥4.2V
11	GND	Ground
12	AUXI/O7	AUX input/output 7. Same as AUXI/O9
13	AUXI/O6	AUX input/output 6. Same as AUXI/O9
14	SB	Power output after power switch. DC13.2V±15%, 2.0A max.
15	AUXO2	AUX output 2. Open collector (500mA max.) (Default none) L≤0.3V
16	AUXO1	AUX output 1. Same as AUXO2
17	AFO	RX filtered audio output (DC-coupled). AF low level output. Wide : 700mVp-p typ. Narrow : 700mVp-p typ. (Standard modulation)
18	GND	Ground
19	DEO	Detected signal output (DC-coupled). 740mVp-p typ.
20	AUXI/O5	AUX input/output 5. Same as AUXI/O9
21	AUXI/O4	AUX input/output 4. Same as AUXI/O9
22	AUXI/O3	AUX input/output 3. Same as AUXI/O9
23	AUXI/O2	AUX input/output 2. Same as AUXI/O9
24	AUXI/O1	AUX input/output 1. Same as AUXI/O9
25	ME	MIC ground

TX-RX unit (X57-6982-72) (B/3)

Pin No.	Name	Description
CN301 (to TX-RX unit C/3)		
1	REF	Reference signal output to the PLL IC
2	Fin	Complementary signal output to the PLL IC
3	CPGND	Ground
4	5C	5V output
5	GND	Ground
6	CP	Signal input from charge pump block in the PLL IC
CN302 (to TX-RX unit C/3)		
1	UL	Control signal input form the PLL IC
2	PLE	Control signal output to the PLL IC
3	DT	Control signal output to the PLL IC
4	PCK	Control signal output to the PLL IC
5	GND	Ground
6	DGND	Ground
CN403 (to VGS-1)		
1	OPT1	VGS busy signal input. Option board I/F 1. Output : L≤0.45V, H≥4.7V/25kΩ load Input : L≤1.0V, H≥4.0V, Input voltage : 0V~5.0V
2	OPT3	VGS playback signal input. Option board I/F 3. Output : L≤0.45V, H≥4.7V/25kΩ load Input : L≤1.0V, H≥4.0V, Input voltage : 0V~5.0V
3	RXD1	Serial data input. Input : L≤1.0V, H≥4.0V, Input voltage : 0V~5.0V
4	TXD1	Serial data output / PTT singanl output (Scrambler board). Output : L≤0.45V, H≥4.7V/25kΩ load
5	CLK	Serial clock output
6	OPT4	VGS enable output. Option board I/F 4. Output : L≤0.45V, H≥4.7V/25kΩ load
7	USEL	UART speed select output. L : 19200bps fixed
8	OPT5	VGS reset signal output. Option board I/F 5. Output : L≤0.45V, H≥4.7V/25kΩ load
9	DGND	Ground
10	AGND	Ground
11	AI	VGS audio input. Zin≥10kΩ, 1Vp-p max, Input Voltage : 0V~5.0V
12	AO	VGS audio output. Zo≤10kΩ
13	AGND	Ground
14	5E	5V power supply output. 78mA max.
15	STON	Side tone input. 1kHz, 5Vp-p
16	DTI	Data signal input. Zin≥22kΩ, 600±200mVp-p
17	TCTL	Speaker mute signal input. Input : L≤1.0V, H≥4.0V, Input voltage : 0V~5.0V
18	NC	No connection
19	AUDIH	MIC mute signal input
20	OPT2	Option board I/F 2. Output : L≤0.45V, H≥4.7V/25kΩ load Input : L≤1.0V, H≥4.0V, Input voltage : 0V~5.0V

TERMINAL FUNCTION

Pin No.	Name	Description
21	TXO	MIC signal output (AC coupled) before pre-emphasis. Zo>2.2kΩ, 130±50mVp-p typ.
22	RXEO	Audio signal output (DC coupled) after de-emphasis. Zo>30kΩ, 1±0.3Vp-p typ.
23	RXEI	Audio signal input (DC coupled) after de-emphasis. Zin>15kΩ, 1±0.3Vp-p typ.
24	TXI	MIC signal input (AC coupled) before pre-emphasis. Zin>22kΩ, 500±50mVp-p typ.
25	OPT6	Option board I/F 6. Output : L≤0.45V, H≥4.7V/25kΩ load
26	8C	Power input after power switch. 8.0V typ, 100mA max.
CN427 (to TX-RX unit A/3 CN701)		
1	NC	No connection
2	SB	Power output after power switch
3	SB	Power output after power switch
4	SB	Power output after power switch
5	SB	Power output after power switch
6	SB	Power output after power switch
7	SB	Power output after power switch
8	AFO	RX filtered audio output
9	DI	Data signal input
10	5C	5V
11	GND	Ground
12	DEO	Detected signal output
13	MI2	External MIC input
14	ME	MIC ground
15	GND	Ground
16	RXD1	Serial data input 1
17	AUXO2	AUX output 2
18	TXD1	Serial data output 1
19	AUXO1	AUX output 1
20	AUXIO9	AUX input/output 9
21	AUXIO5	AUX input/output 5
22	AUXIO8	AUX input/output 8
23	AUXIO4	AUX input/output 4
24	TXD2	Serial data output 2
25	AUXIO3	AUX input/output 3
26	RXD2	Serial data input 2
27	AUXIO2	AUX input/output 2
28	AUXIO1	AUX input/output 1
29	AUXIO7	AUX input/output 7
30	AUXIO6	AUX input/output 6

Pin No.	Name	Description
CN428		
1	SB	Power output of switched power supply
2	SPI	Speaker output
3	SPO	Speaker input
4	PA	Control signal output of PA function
5	HOR	Control signal output of Horn alert function
6	GND	Ground
CN429 (to Display unit CN902)		
1	(DM)	Reserve
2	GND	Ground
3	RXD	Serial data signal input
4	TXD	Serial data signal output
5	NC	No connection
6	5C	5V output
7	SHIFT/MODEL	Control signal output of beat-shift function
8	GND	Ground
9	(LCDDO)	Reserve
10	(LCDDI)	Reserve
11	(LCDCLK)	Reserve
12	RST2	Reset signal output
13	PSENS	Detection signal input of display unit
14	GND	Ground
15	ME	MIC ground
16	MIC	MIC signal input
17	GND	Ground
18	GND	Ground
19	PSW	Detection signal input of power switch
20	NC	No connection
21	SB	Power output of switched power supply
22	SB	Power output of switched power supply
23	8C	8V output
24	GND	Ground
25	SPO	Speaker output
26	SPO	Speaker output
27	SPO	Speaker output
28	SPO	Speaker output
29	SPO	Speaker output
30	SPO	Speaker output
CN804		
1	IGN	Ignition sense input
2	GND	Ground

TERMINAL FUNCTION

Solder Land

Name	Description
to Scrambler board	
GND (GND)	Ground
TXD1 (PTT)	PTT signal output. L : TX, H : Not TX L≤0.45V, H≥4.7V/25kΩ load (PTT signal input) Active low. L≤1.0V, H≥4.0V, Input voltage : 0V~5.0V
OPT1 (CODE SELECT1)	Scramble code signal output 1. L≤0.45V, H≥4.7V/25kΩ load
OPT3 (CODE SELECT2)	Scramble code signal output 2. L≤0.45V, H≥4.7V/25kΩ load
OPT4 (ECHO PTT)	Echo PTT signal output. L : TX, H : Not TX L≤0.45V, H≥4.7V/25kΩ load
OPT5 (CODE SELECT8)	Scramble code signal output 4. L≤0.45V, H≥4.7V/25kΩ load
TXO (TX OUT)	MIC signal output (AC coupled) before pre-emphasis. Zo>2.2kΩ, 130±50mVp-p typ. (Standard modulation)
OPT2 (SCRAMBLE)	Scrambler control signal output. L : ON, H : OFF L≤0.45V, H≥4.7V/25kΩ load

Name	Description
RXEO (RX OUT)	Audio signal output (DC coupled) after de-emphasis. Zo>30kΩ, 1±0.3Vp-p typ. (Standard modulation)
TXI (TX IN)	MIC signal input (AC coupled) before pre-emphasis. Zin>2.2kΩ, 130±50mVp-p typ. (Standard modulation)
RXEI (RX IN)	Audio signal input (DC coupled) after de-emphasis. Zin>15kΩ, 1±0.3Vp-p typ. (Standard modulation)
OPT6 (CODE SELECT4)	Scramble code signal output 3. L≤0.45V, H≥4.7V/25kΩ load
8C (+V)	8V AVR output. 8.0V typ, 100mA max.
to GPS receiver	
GND (GND)	Ground
RXD1*1 (DATA OUT1)	Data output
RXD2*1 (DATA OUT1)	Data output
5E (+5V)	5V power supply output. 78mA max.

*1: Depending on the connected optional accessory, the DATA OUT1 may connect to either RXD1 or RXD2.

TK-7185 PC BOARD

DISPLAY UNIT (X54-3480-10)
Component side view (J72-0932-19)

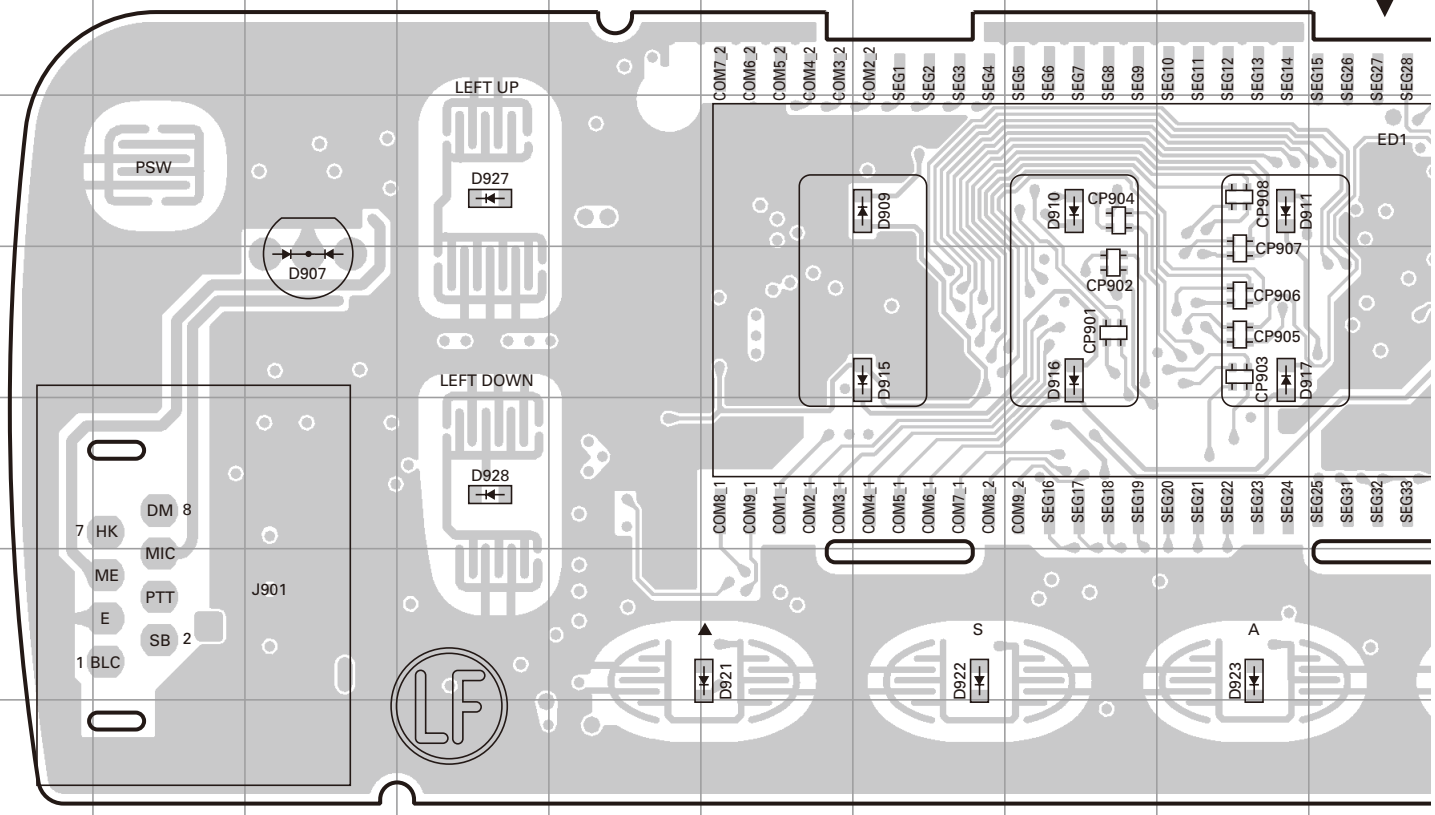

DISPLAY UNIT (X54-3480-10)
Foil side view (J72-0932-19)

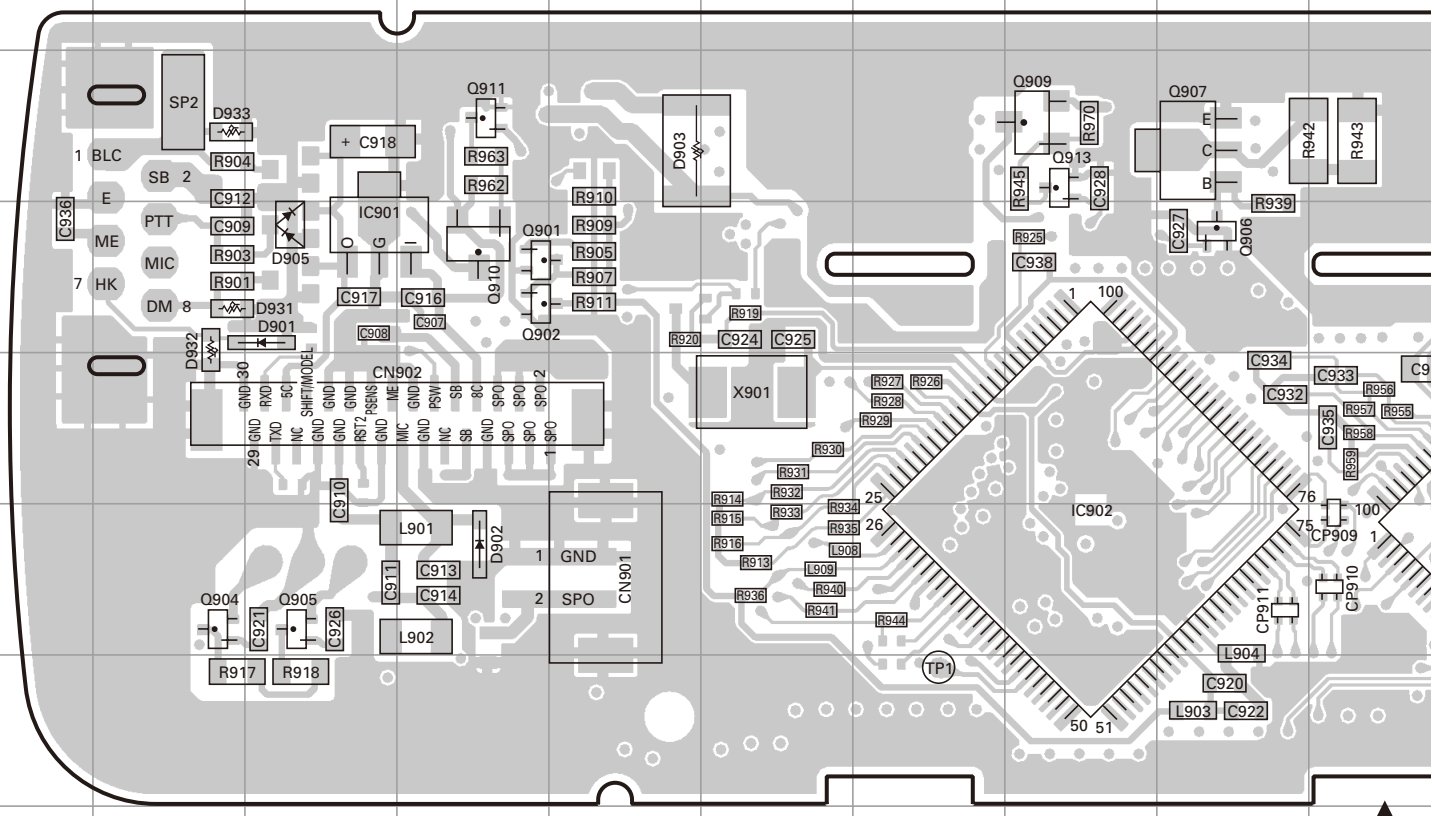

DISPLAY UNIT (X54-3480-10)
Component side view (J72-0932-19)

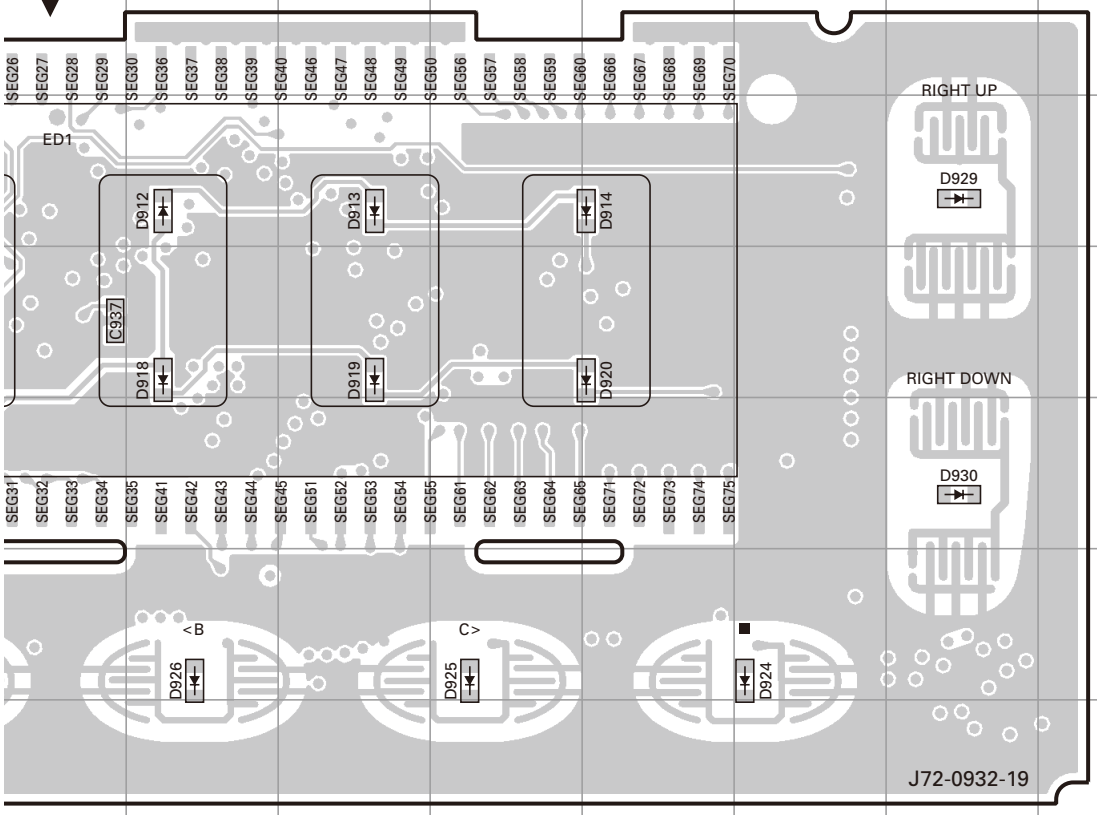

Ref. No.	Address	Ref. No.	Address
D907	4C	D920	4N
D909	3G	D921	6F
D910	3H	D922	6G
D911	3I	D923	6I
D912	3K	D924	6O
D913	3L	D925	6M
D914	3N	D926	6K
D915	4G	D927	3D
D916	4H	D928	5D
D917	4I	D929	3P
D918	4K	D930	5P
D919	4L		

Component side
Layer 1
Layer 2
Layer 3
Layer 4
Foil side

DISPLAY UNIT (X54-3480-10)
Foil side view (J72-0932-19)

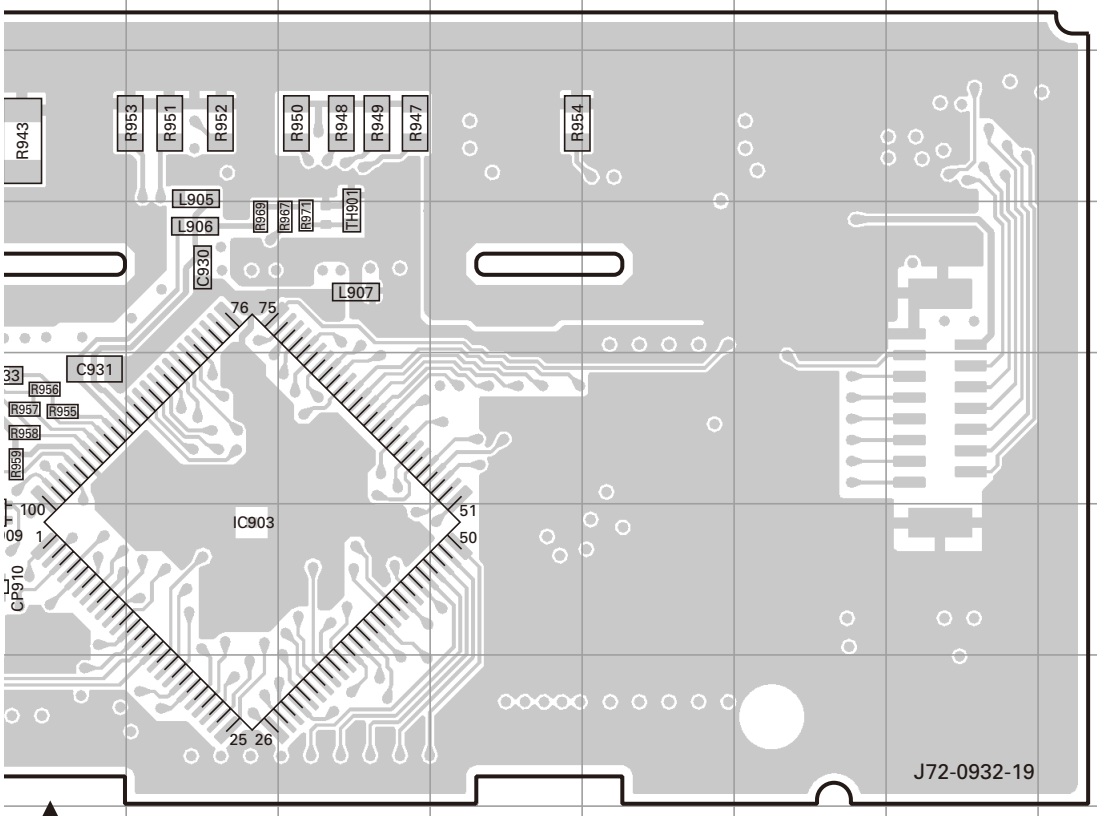

Ref. No.	Address	Ref. No.	Address
IC901	10C	Q910	10D
IC902	12H	Q911	9D
IC903	12K	Q913	9H
Q901	10D	D901	10C
Q902	10D	D902	12D
Q904	12B	D903	9E
Q905	12C	D905	10C
Q906	10I	D931	10B
Q907	9I	D932	10B
Q909	9H	D933	9B

Component side
Layer 1
Layer 2
Layer 3
Layer 4
Foil side

TK-7185 PC BOARD

TX-RX UNIT (X57-6982-72) (A/3) Component side view (J79-0117-19 A/3)

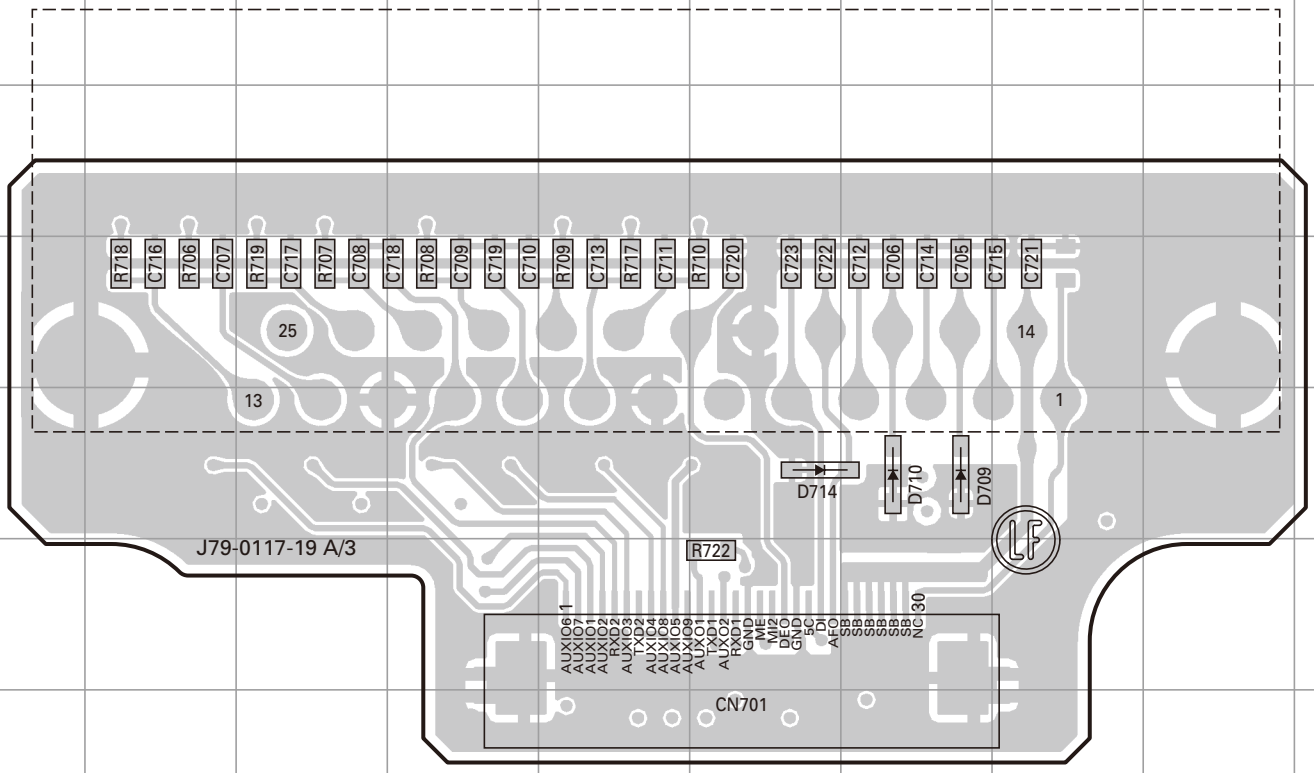

Ref. No.	Address
D709	5G
D710	5G
D714	5F

Component side
Layer 1
Layer 2
Layer 3
Layer 4
Foil side

TX-RX UNIT (X57-6982-72) (C/3) Component side view (J79-0117-19 C/3)

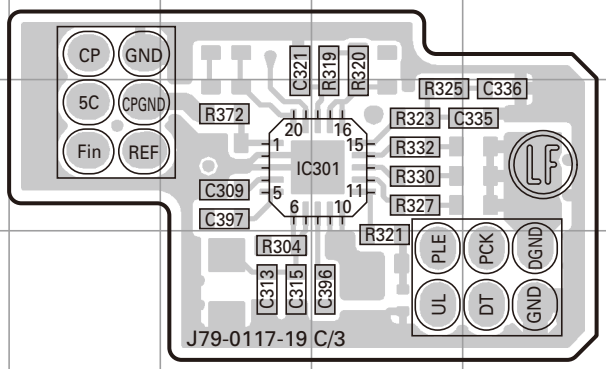

Ref. No.	Address
IC301	11E

Component side
Layer 1
Layer 2
Layer 3
Layer 4
Foil side

TX-RX UNIT (X57-6982-72) (A/3) Foil side view (J79-0117-19 A/3)

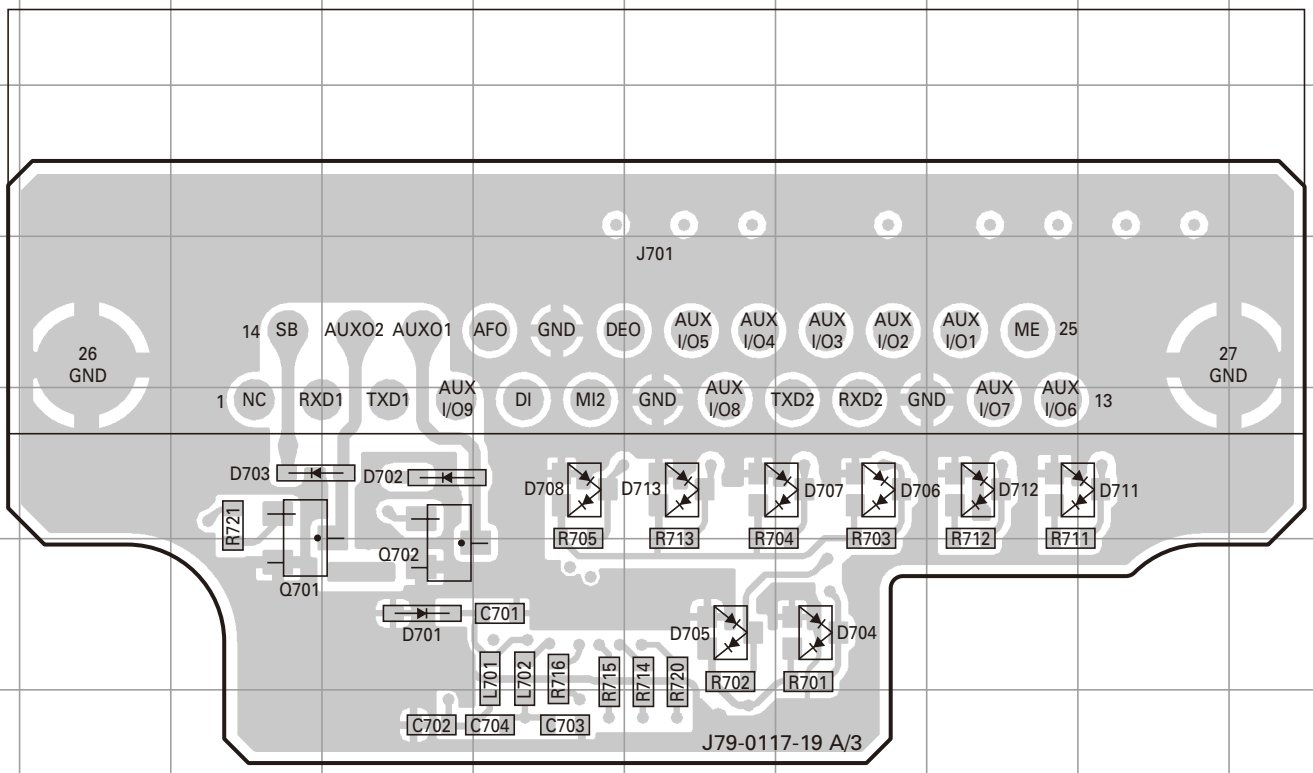

Ref. No.	Address	Ref. No.	Address	Ref. No.	Address
Q701	6C	D704	6G	D711	5I
Q702	6D	D705	6F	D712	5H
D701	6D	D706	5G	D713	5F
D702	5D	D707	5G		
D703	5C	D708	5E		

Component side
Layer 1
Layer 2
Layer 3
Layer 4
Foil side

TX-RX UNIT (X57-6982-72) (C/3) Foil side view (J79-0117-19 C/3)

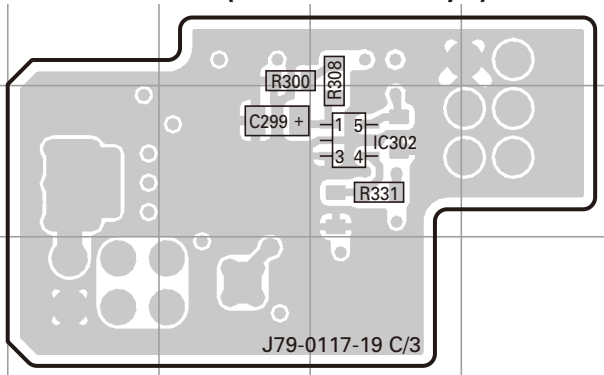

Ref. No.	Address
IC302	11E

Component side
Layer 1
Layer 2
Layer 3
Layer 4
Foil side

TK-7185 PC BOARD

TX-RX UNIT (X57-6982-72) (B/3)
Component side view (J79-0117-19 B/3)

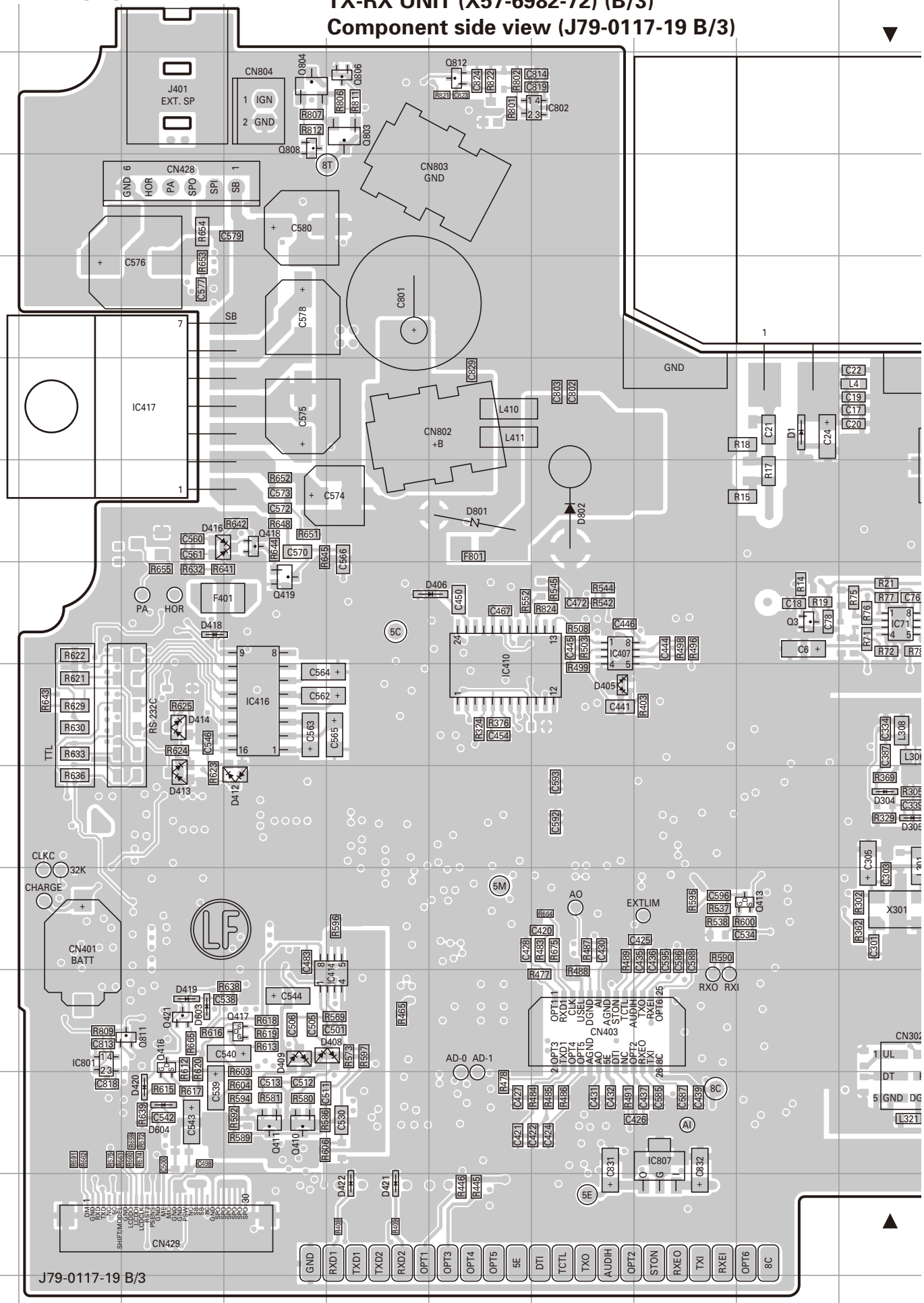

J79-0117-19 B/3

PC BOARD TK-7185

TX-RX UNIT (X57-6982-72) (B/3)
Component side view (J79-0117-19 B/3)

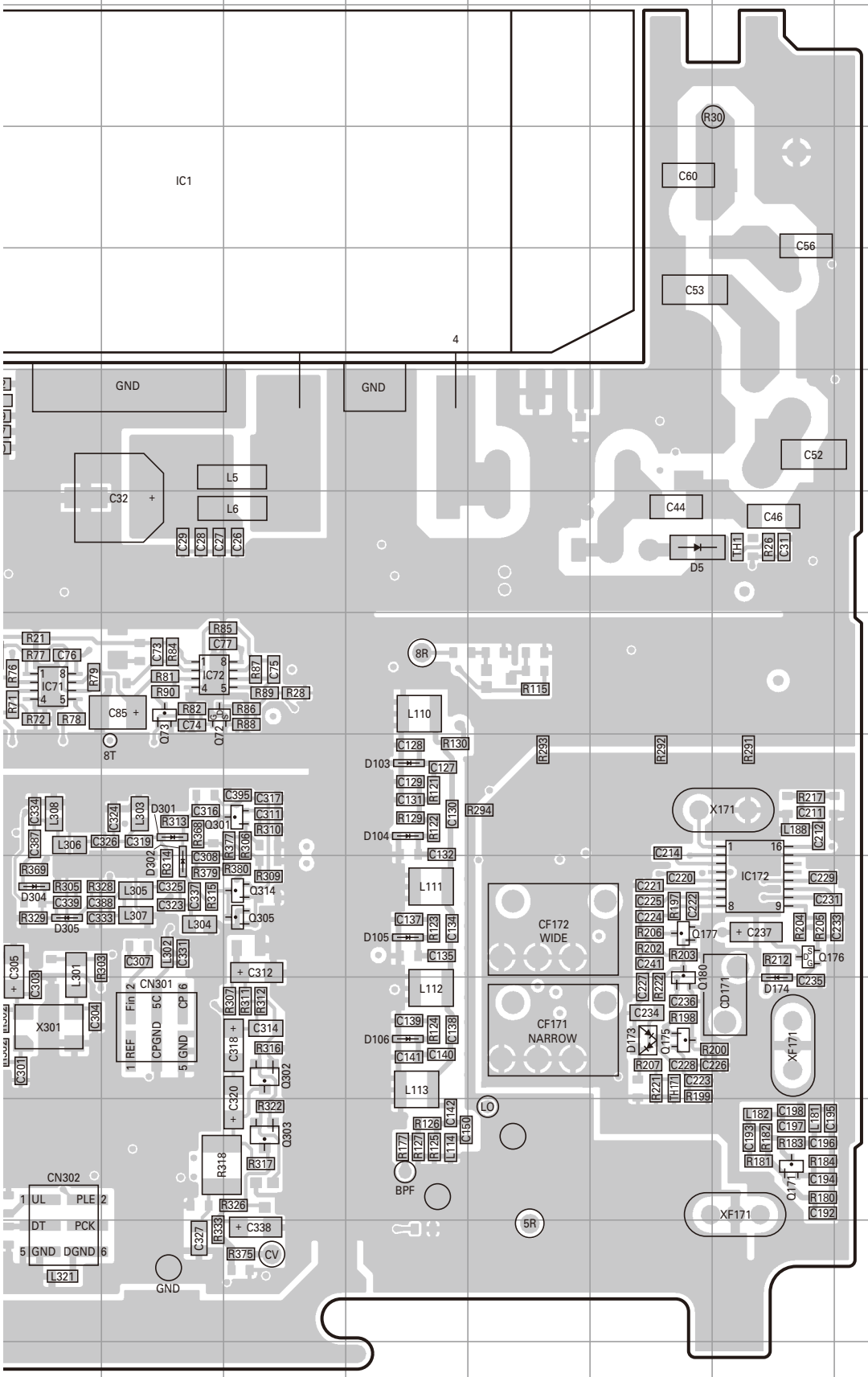

Ref. No.	Address	Ref. No.	Address
IC1	3K	Q804	2D
IC71	7J	Q806	2E
IC72	7K	Q808	2D
IC172	9P	Q811	11C
IC407	7G	Q812	2F
IC410	8F	D1	5I
IC414	11E	D5	6O
IC416	8D	D103	8M
IC417	5C	D104	8M
IC801	11B	D105	9M
IC802	2G	D106	10M
IC807	12H	D173	10O
Q3	7I	D174	10P
Q72	7K	D301	8K
Q73	7K	D302	9K
Q171	11P	D304	9J
Q175	10O	D305	9J
Q176	9P	D405	8G
Q177	9O	D406	7F
Q180	10O	D408	11E
Q301	8L	D409	11D
Q302	10L	D412	9D
Q303	11L	D413	9C
Q305	9L	D414	8C
Q314	9L	D416	6C
Q410	12D	D418	7C
Q411	12D	D419	11C
Q413	10I	D420	12C
Q416	11C	D421	13E
Q417	11D	D422	13E
Q418	6D	D603	11C
Q419	7D	D604	12C
Q421	11C	D801	6F
Q803	2E	D802	6G

Component side
Layer 1
Layer 2
Layer 3
Layer 4
Foil side

TK-7185 PC BOARD

TX-RX UNIT (X57-6982-72) (B/3)
Foil side view (J79-0117-19 B/3)

Ref. No.	Address	Ref. No.	Address
IC171	11F	Q409	9K
IC251	12J	Q412	11L
IC401	10R	Q414	12L
IC402	9R	Q415	12K
IC403	9N	Q801	6P
IC404	11P	Q802	3P
IC405	11N	Q805	2O
IC406	8O	Q807	3O
IC408	7O	Q809	2O
IC409	8L	Q810	4P
IC411	8M	D2	6D
IC412	11L	D3	6F
IC413	12M	D4	5F
IC415	9L	D6	6D
IC803	3R	D7	4D
IC804	2M	D8	3D
IC805	6P	D11	7E
Q1	7I	D171	9E
Q2	7J	D172	10F
Q103	7F	D251	12J
Q172	9D	D308	11J
Q173	9F	D309	11H
Q174	9E	D311	11J
Q178	10E	D313	11H
Q251	12I	D314	9J
Q306	9H	D315	9H
Q307	9J	D316	8H
Q308	9I	D402	9R
Q309	9K	D403	10R
Q310	9J	D404	9R
Q311	8J	D407	12L
Q312	11I	D417	9Q
Q313	8I	D423	9Q
Q402	11R	D804	3P
Q405	10M	D805	6O
Q406	10K		

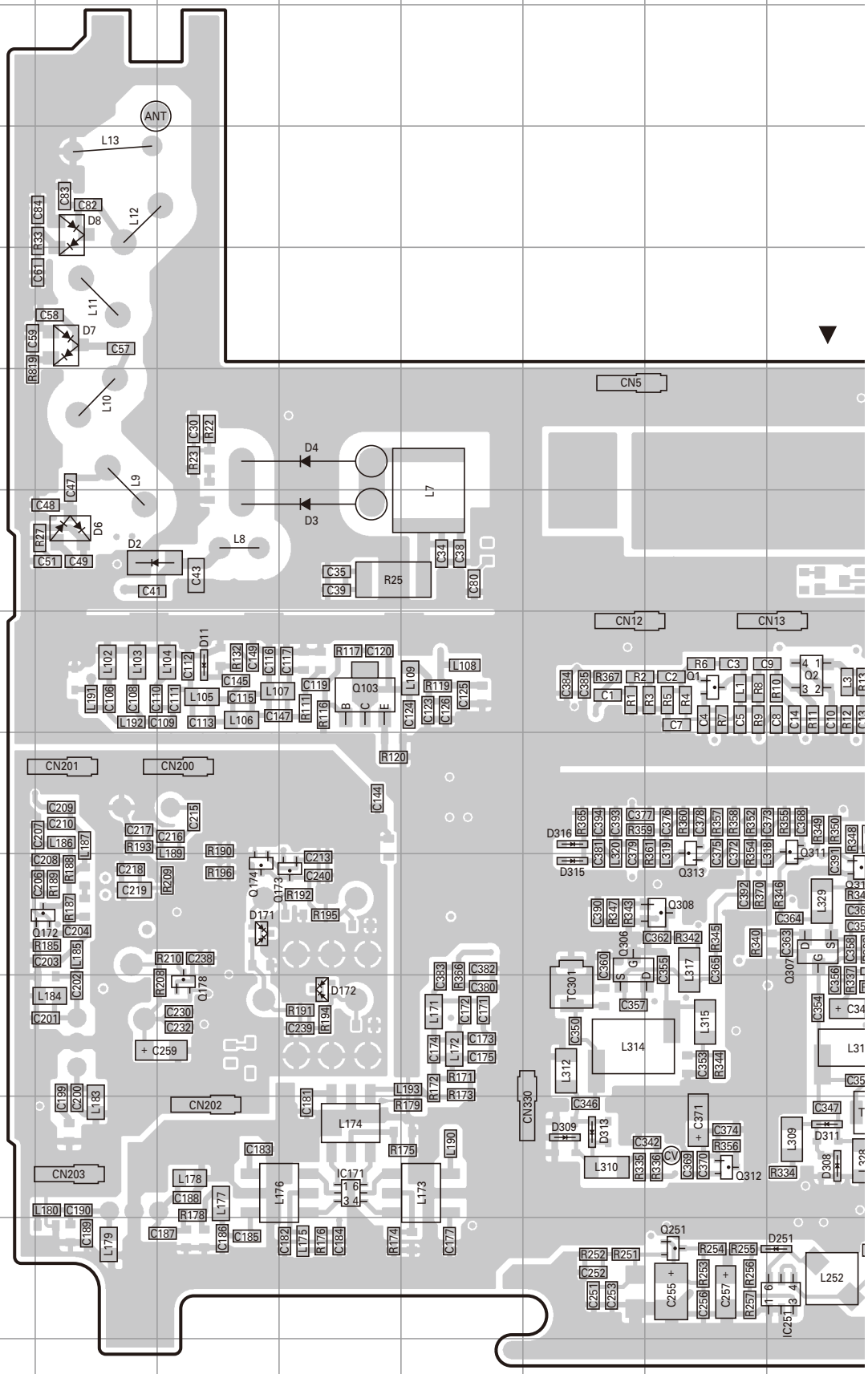

Component side
Layer 1
Layer 2
Layer 3
Layer 4
Foil side

TX-RX UNIT (X57-6982-72) (B/3)
Foil side view (J79-0117-19 B/3)

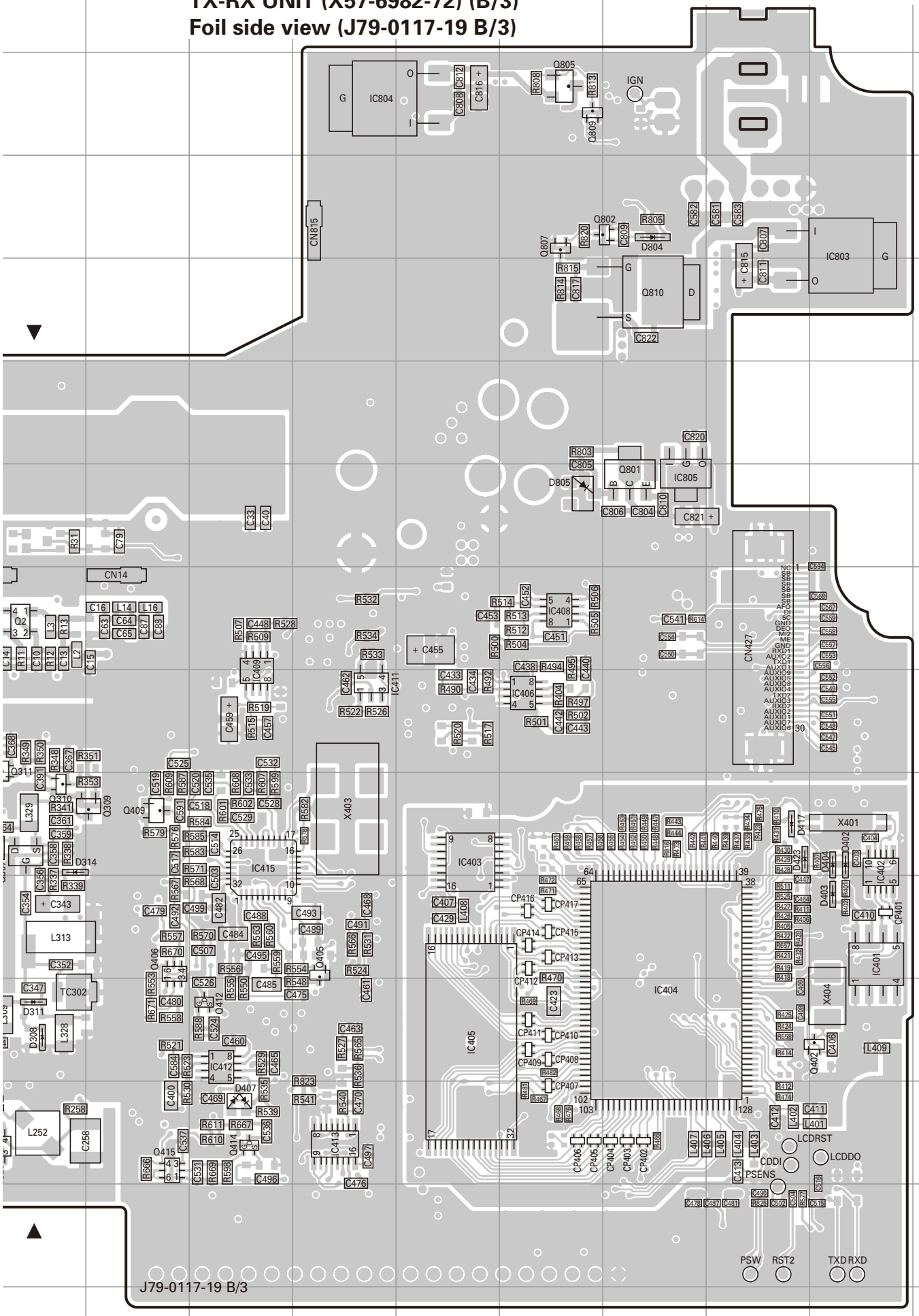

J79-0117-19 B/3

TK-7185 SCHEMATIC DIAGRAM

DISPLAY UNIT (X54-3480-10)

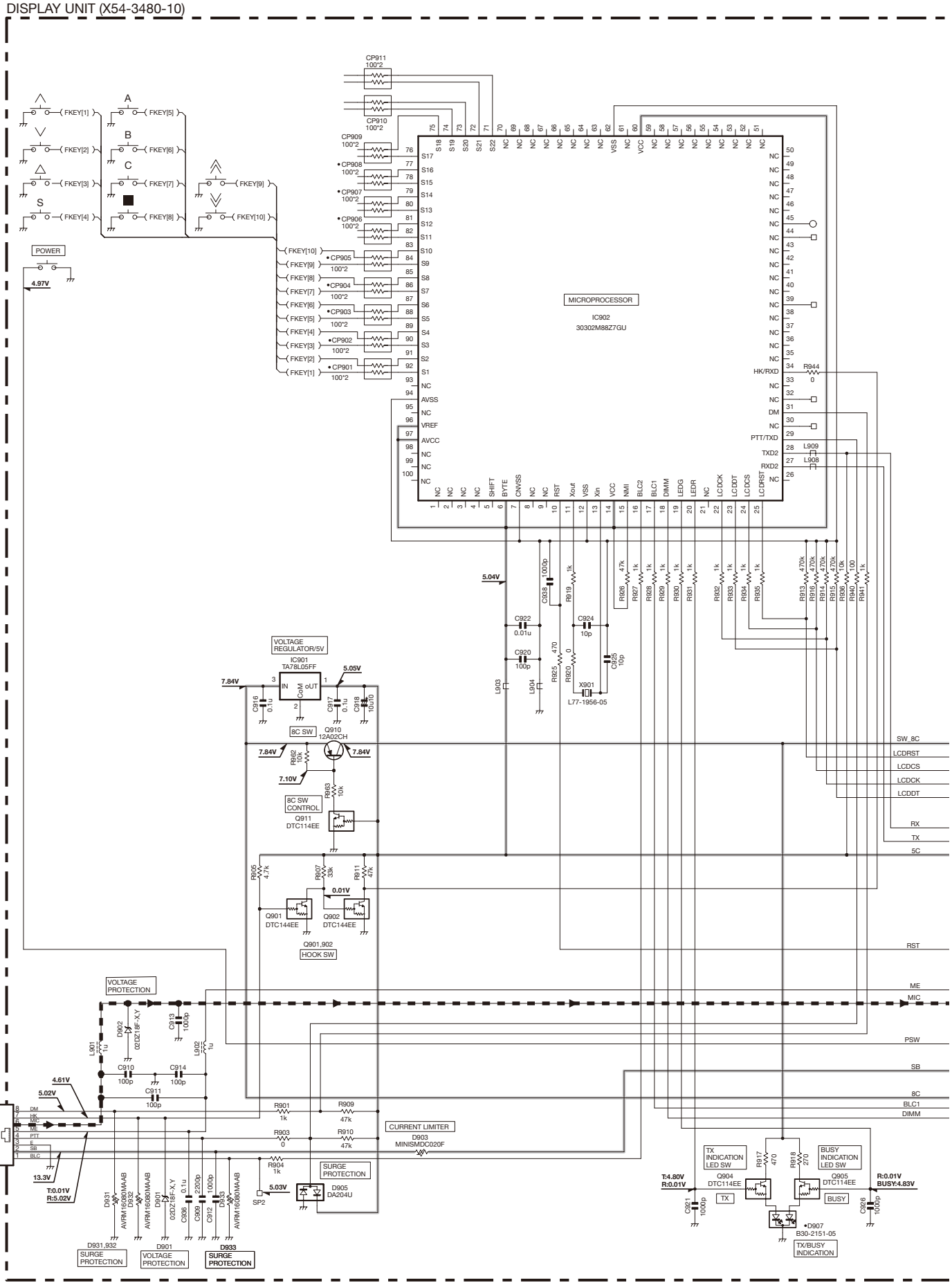

X54-348 1/2

SCHEMATIC DIAGRAM TK-7185

DISPLAY UNIT (X54-3480-10)

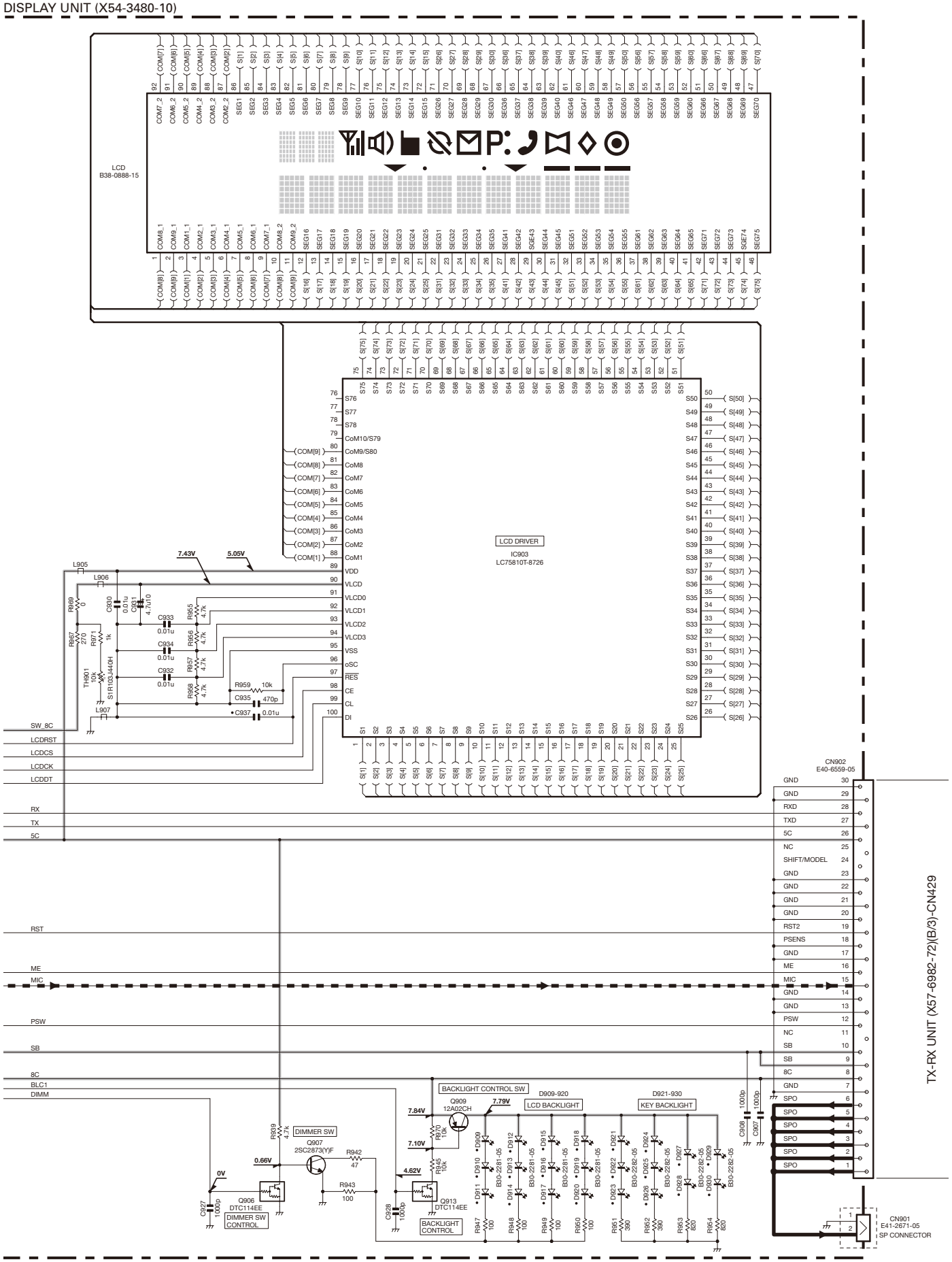

Note : The components marked with a dot (•) are parts of layer 1.

TK-7185 SCHEMATIC DIAGRAM

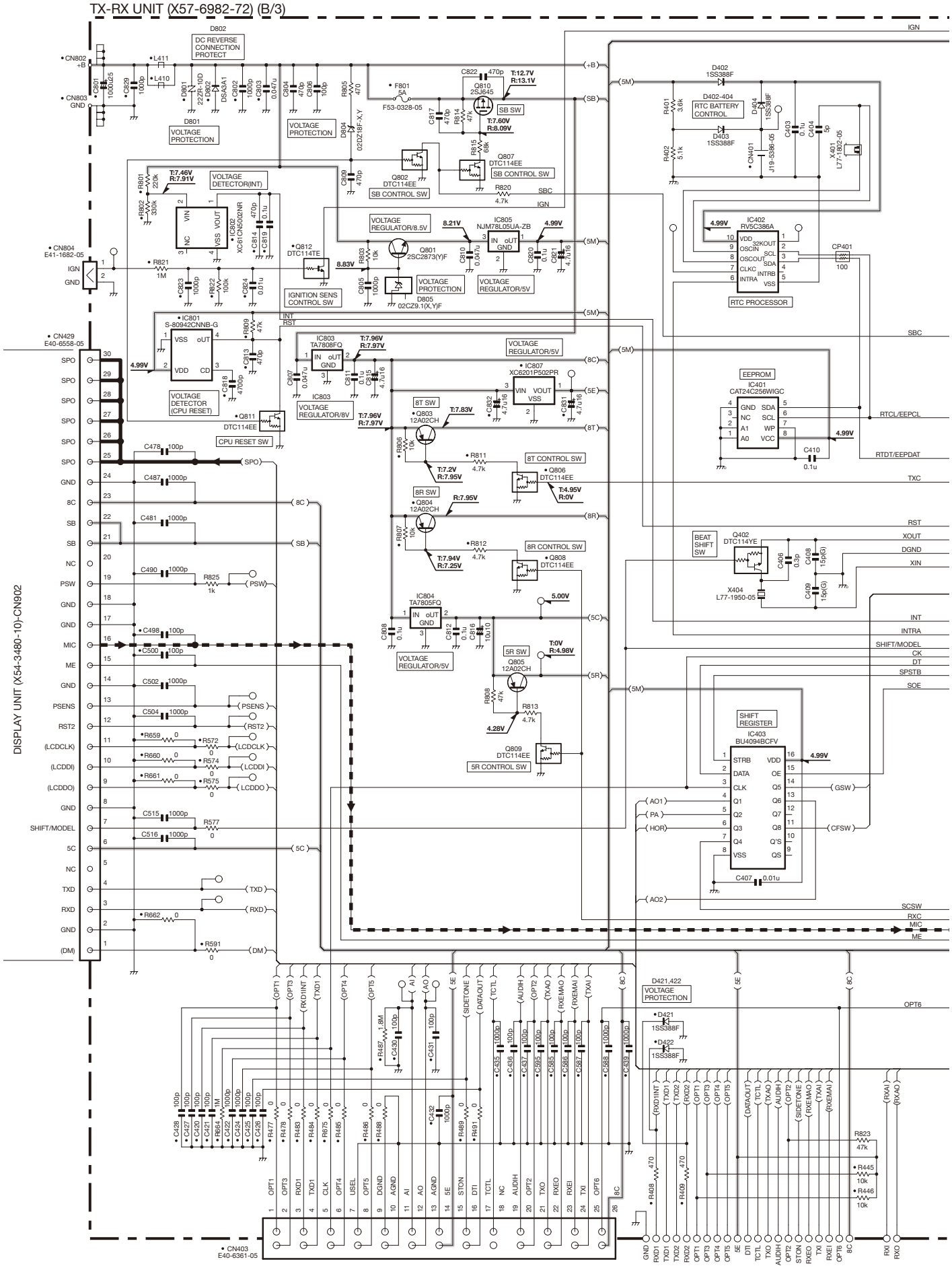

SCHEMATIC DIAGRAM TK-7185

TX-RX UNIT (X57-6982-72) (B/3)

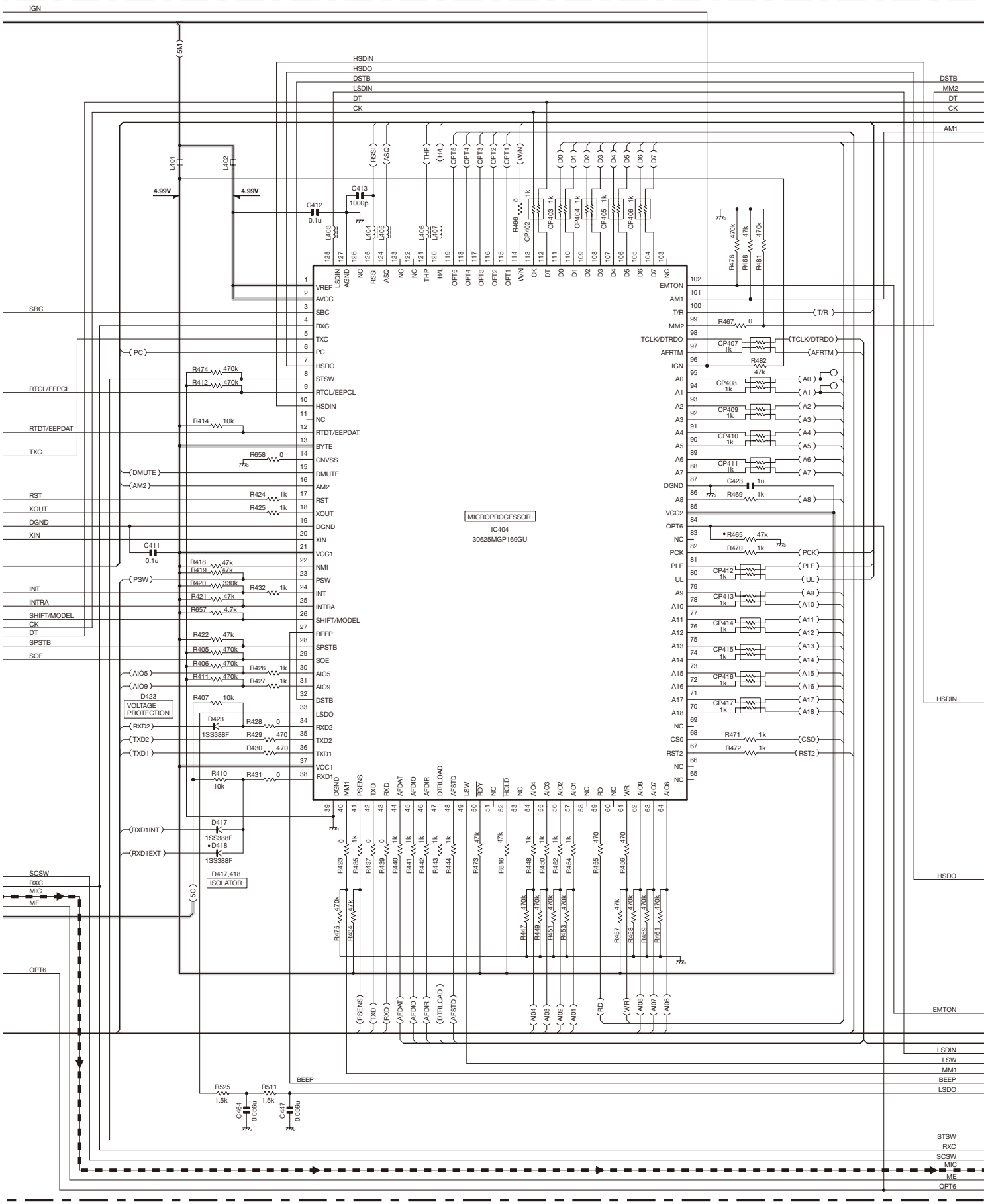

TK-7185 SCHEMATIC DIAGRAM

TX-RX UNIT (X57-6982-72) (B/3)

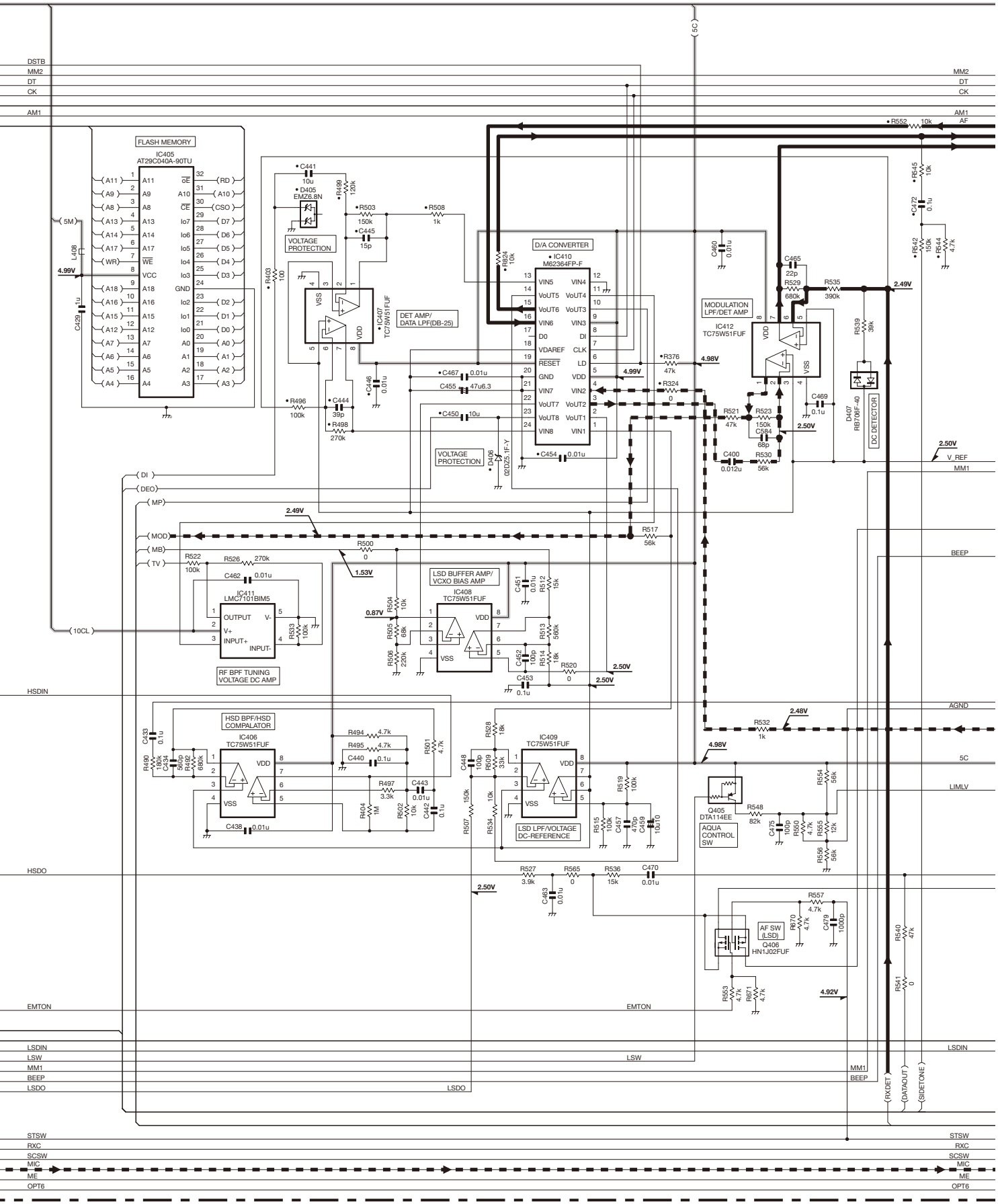

SCHEMATIC DIAGRAM TK-7185

TX-RX UNIT (X57-6982-72) (B/3)

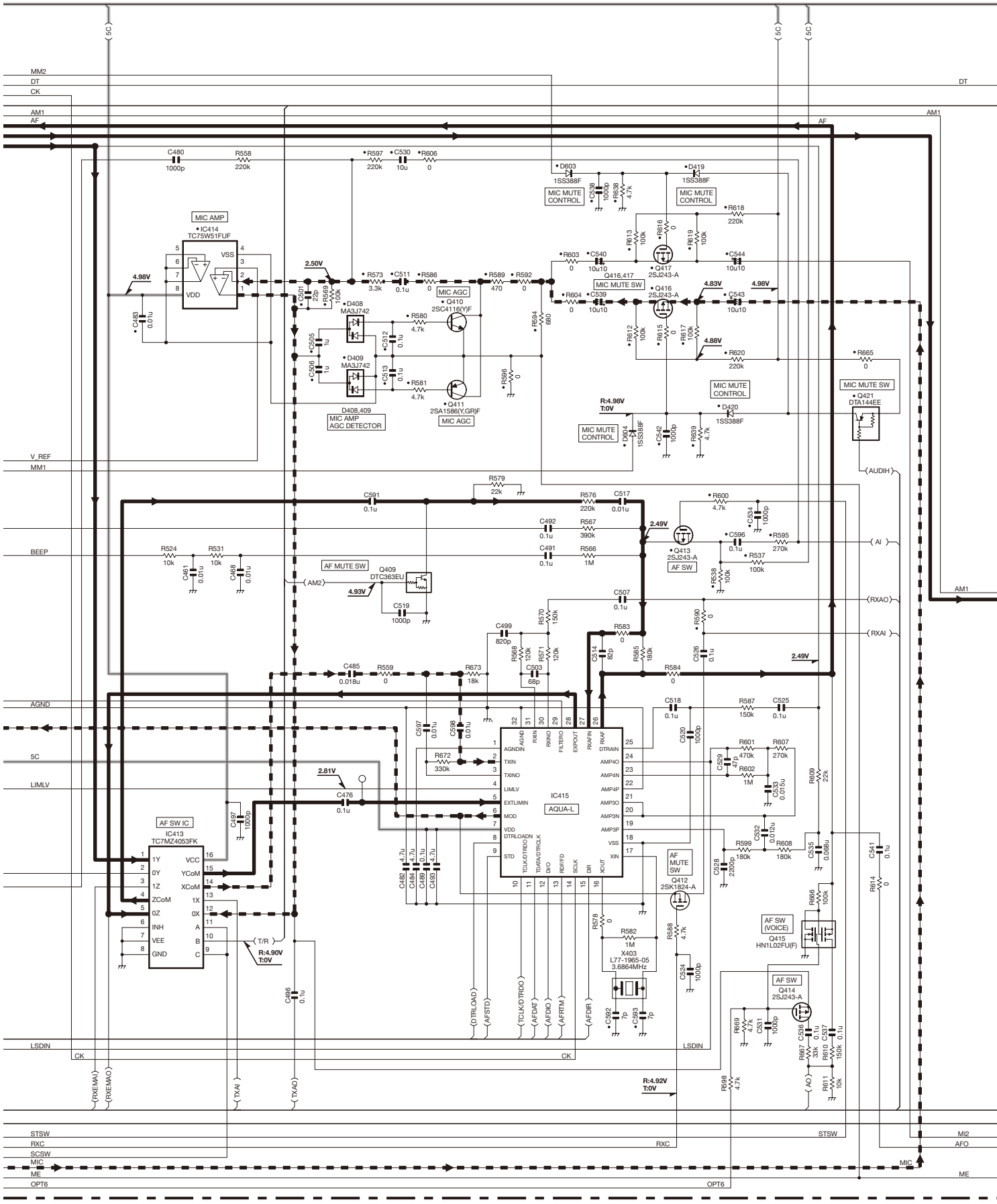

TK-7185 SCHEMATIC DIAGRAM

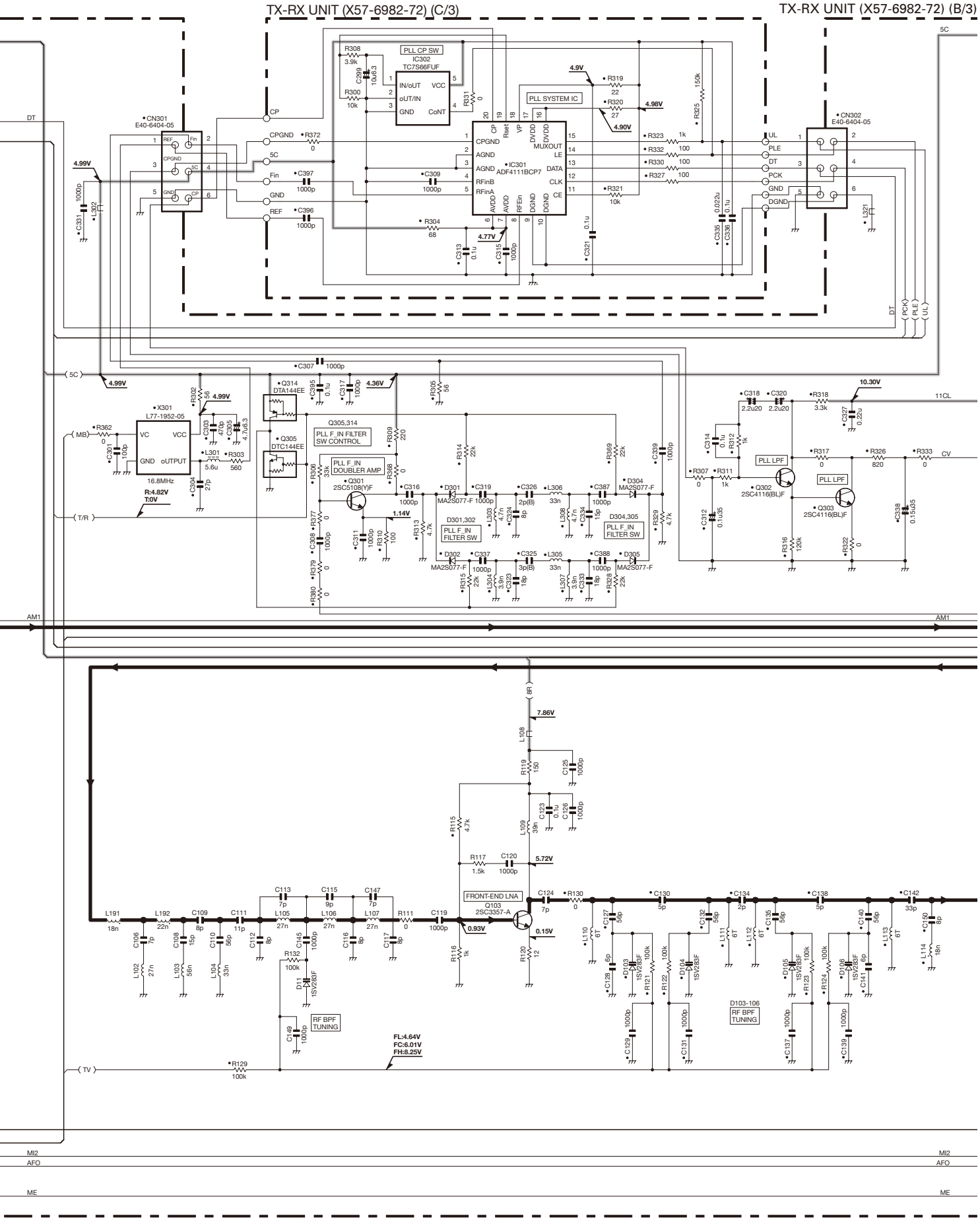

SCHEMATIC DIAGRAM TK-7185

TX-RX UNIT (X57-6982-72) (B/3)

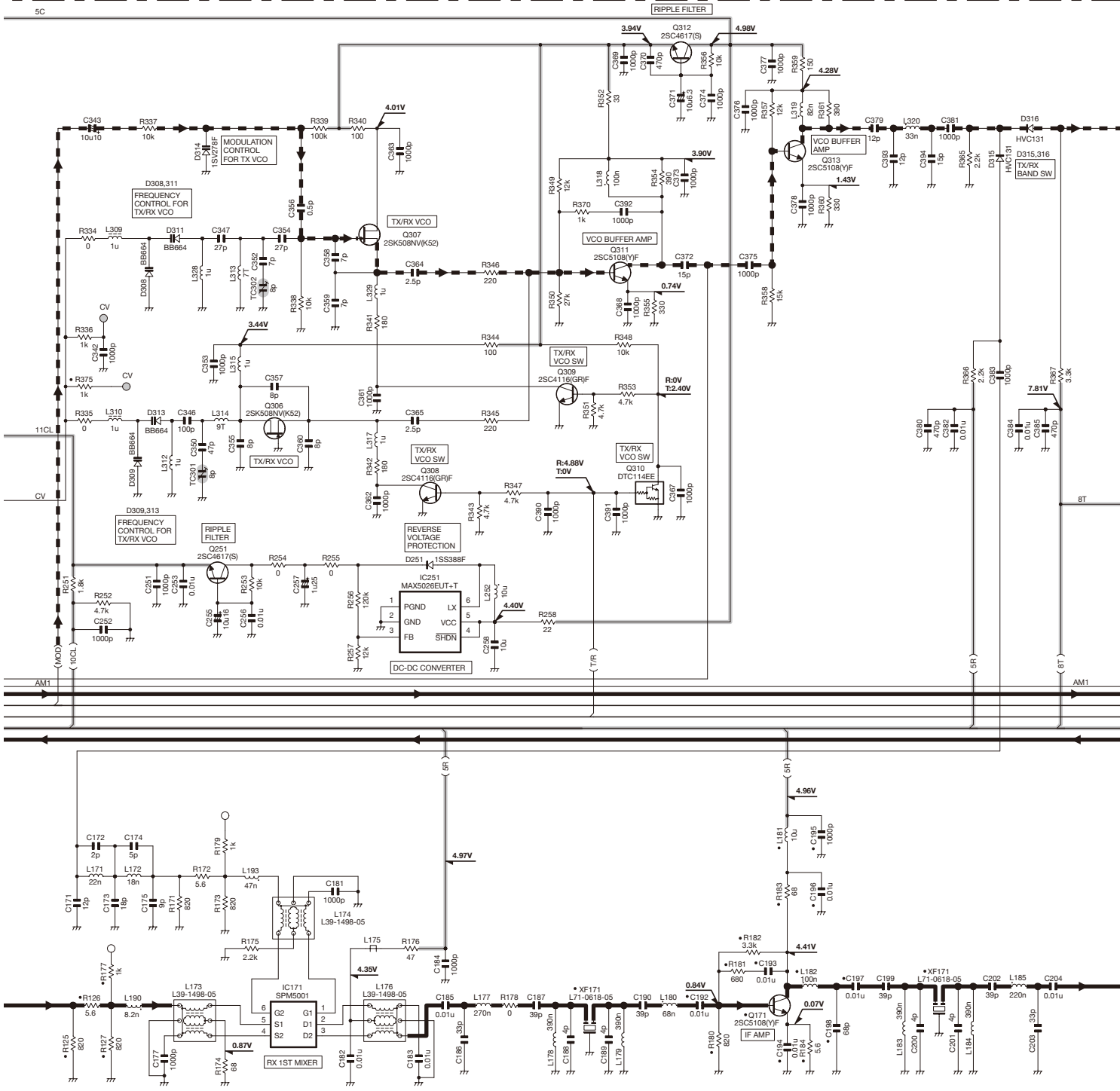

MI2
AFO
ME

TK-7185 SCHEMATIC DIAGRAM

TX-RX UNIT (X57-6982-72) (B/3)

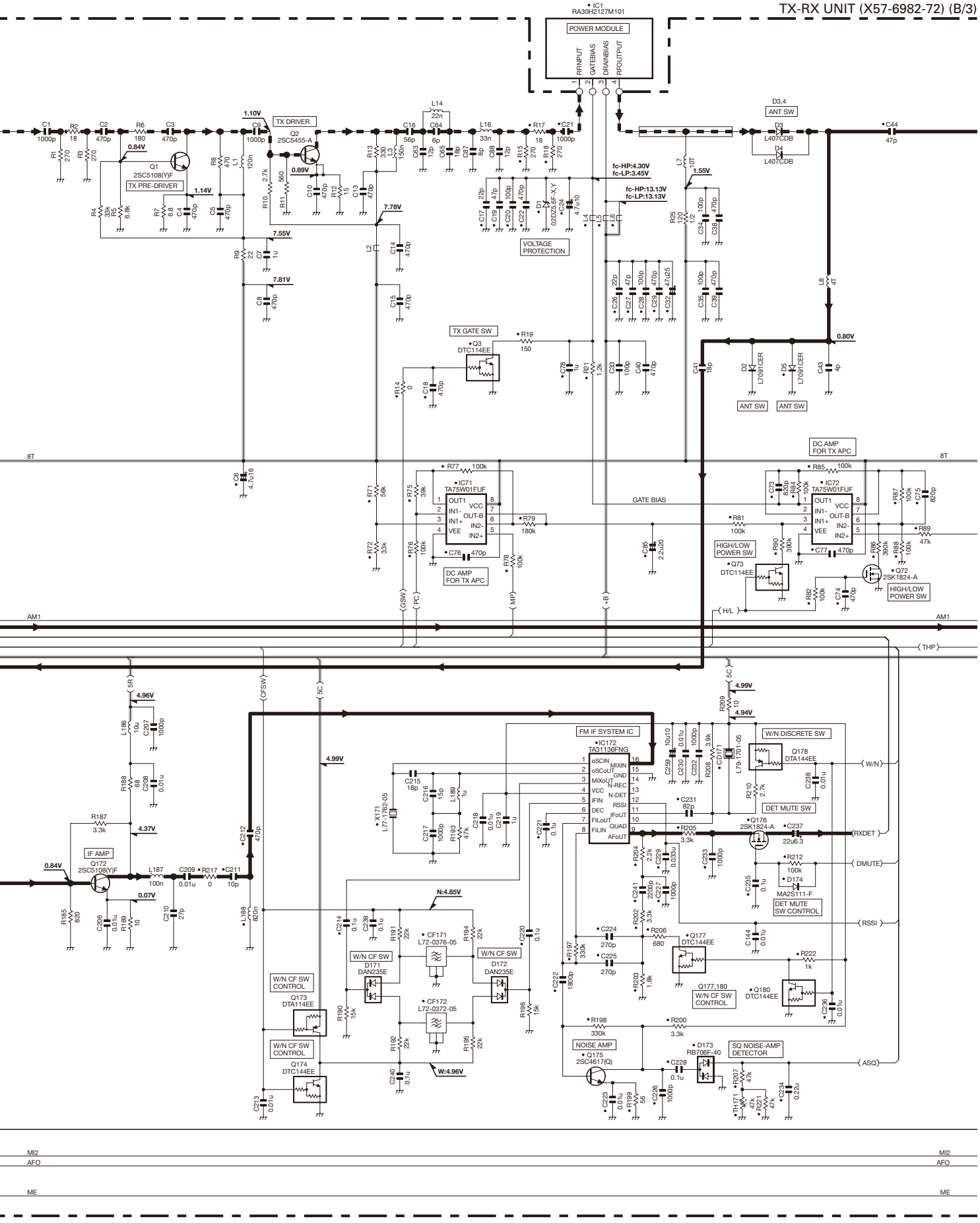

SCHEMATIC DIAGRAM TK-7185

TX-RX UNIT (X57-6982-72) (B/3)

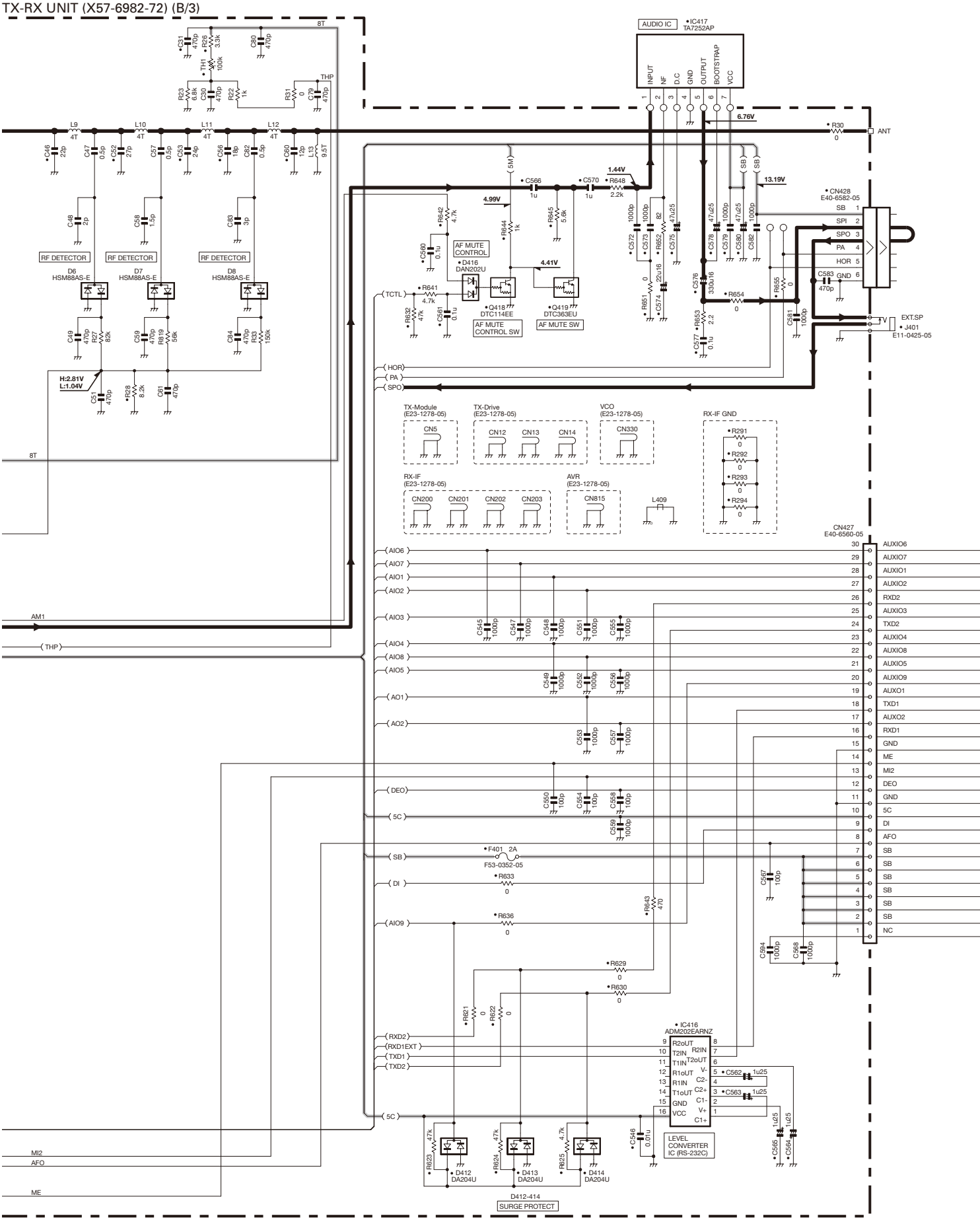

TK-7185 SCHEMATIC DIAGRAM

Note : The components marked with a dot (•) are parts of layer 1.

TX-RX UNIT (X57-6982-72) (A/3)

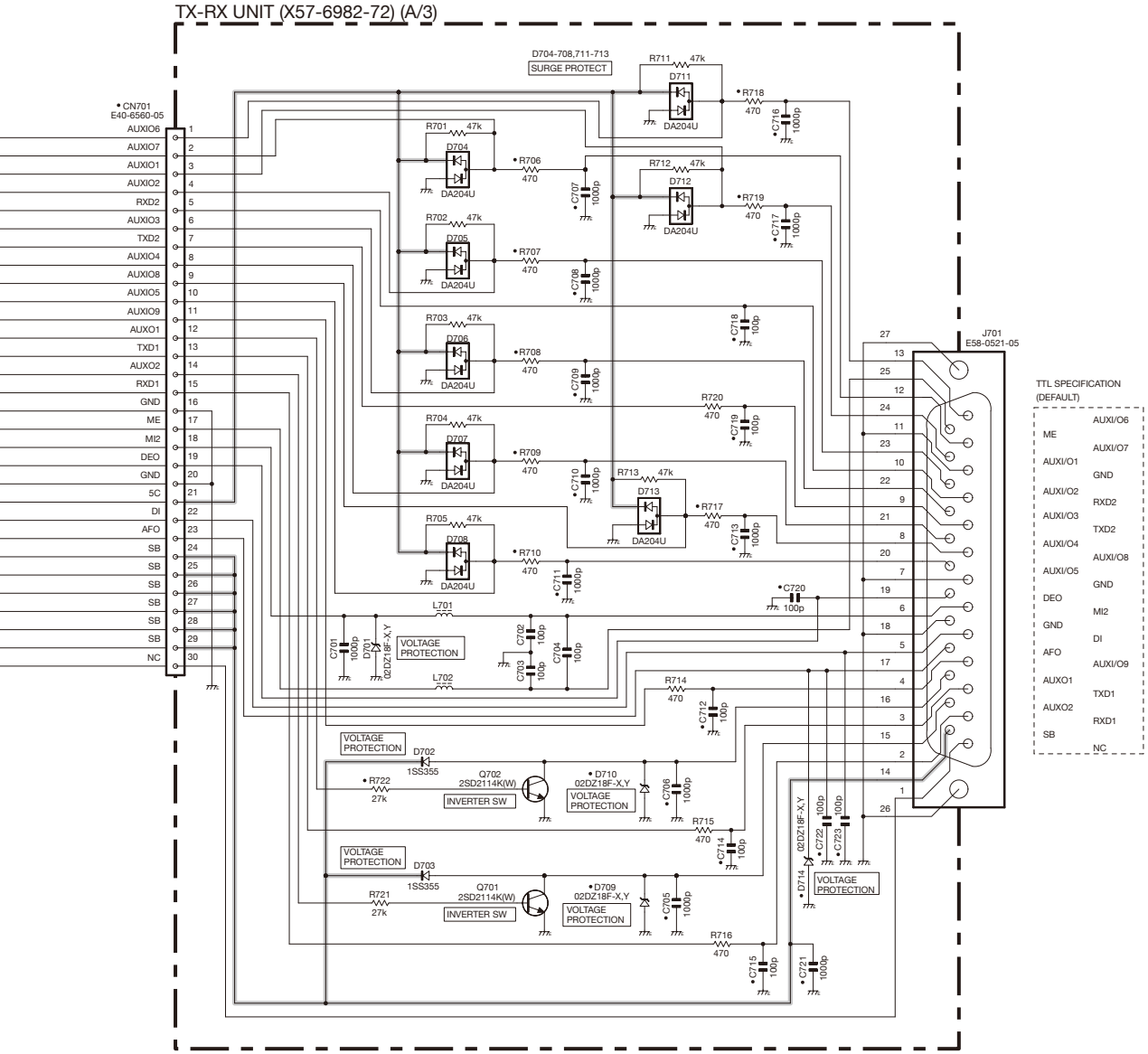

INTERCONNECTION DIAGRAM

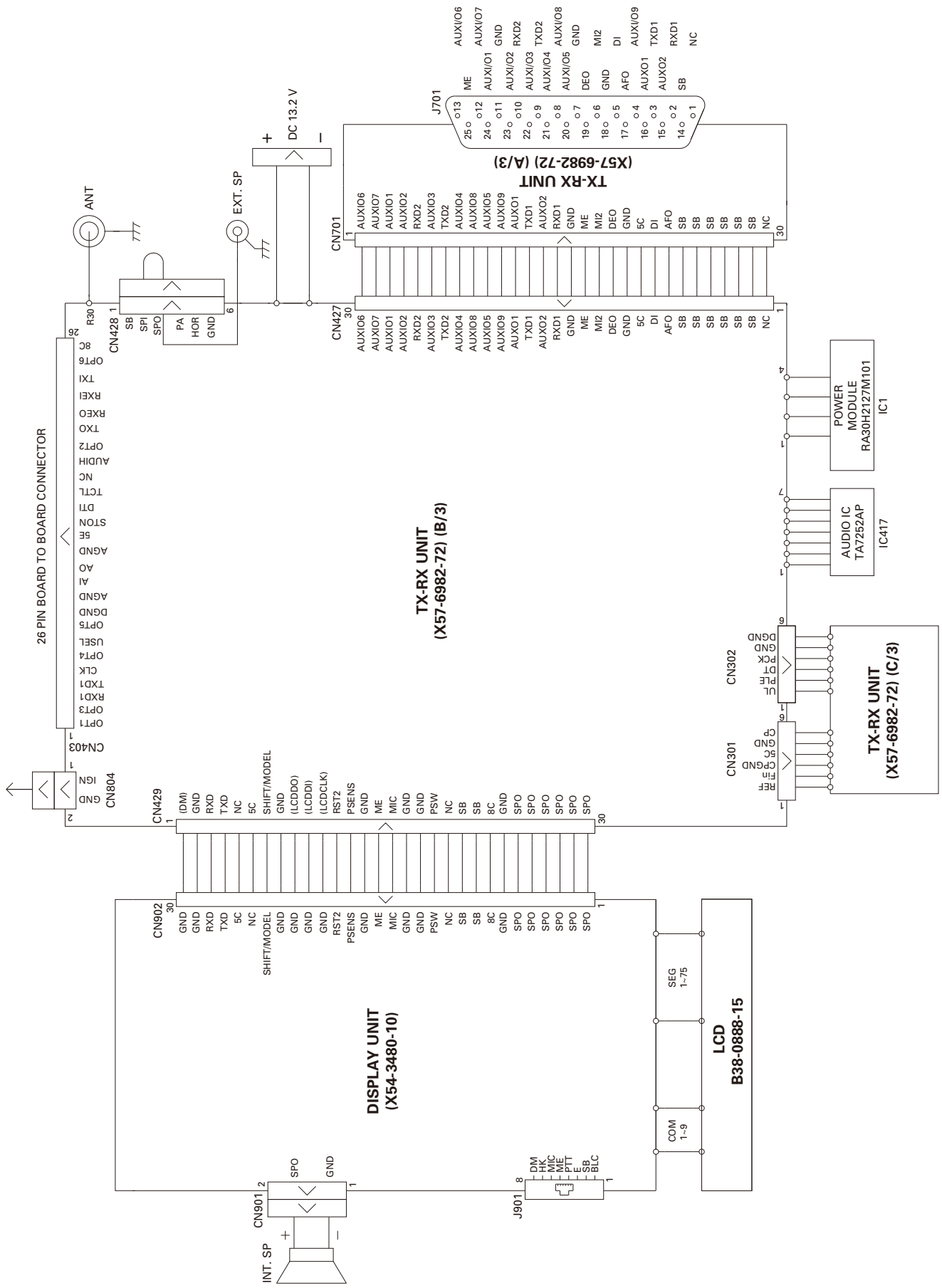

TK-7185 BLOCK DIAGRAM

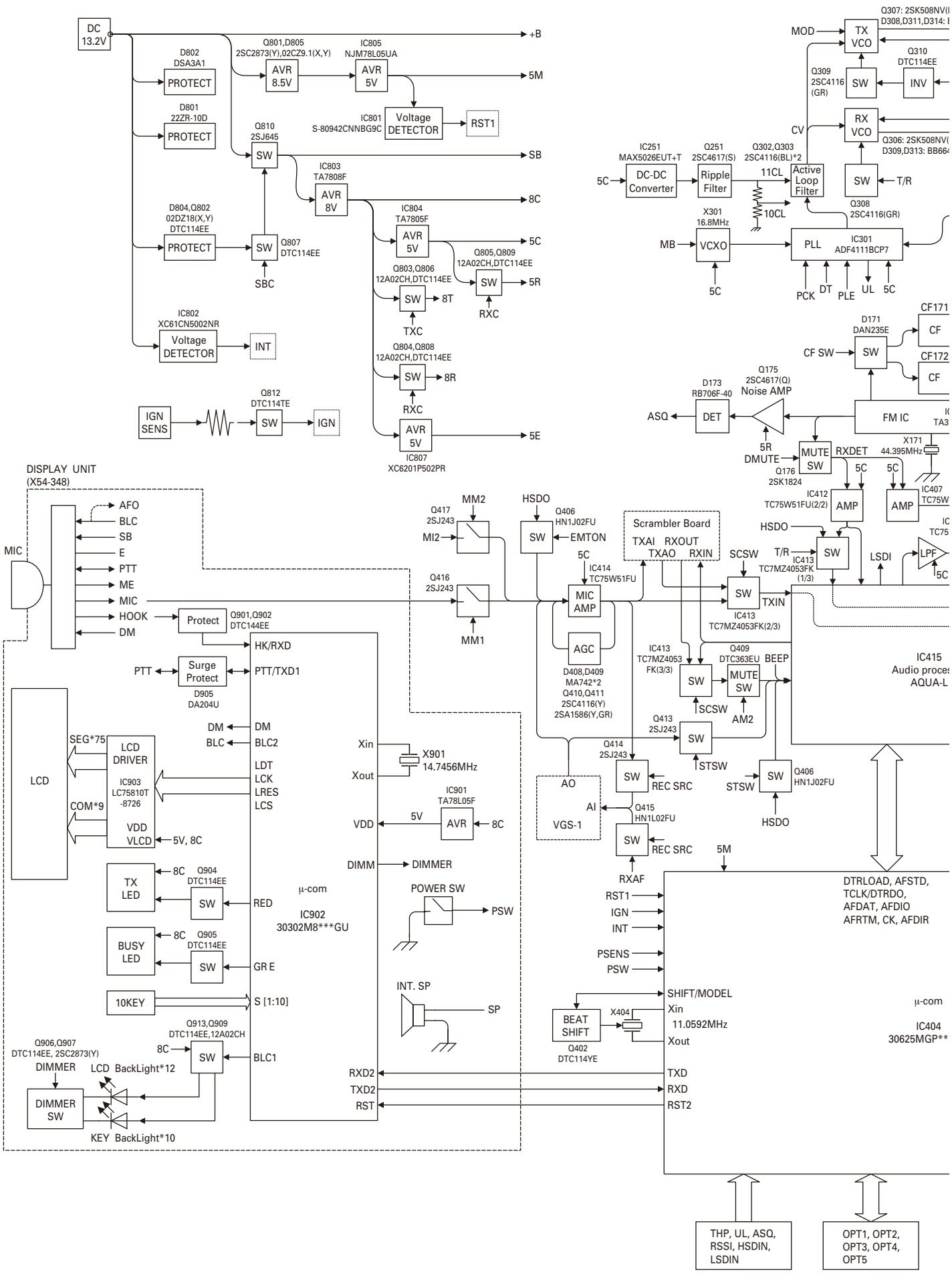

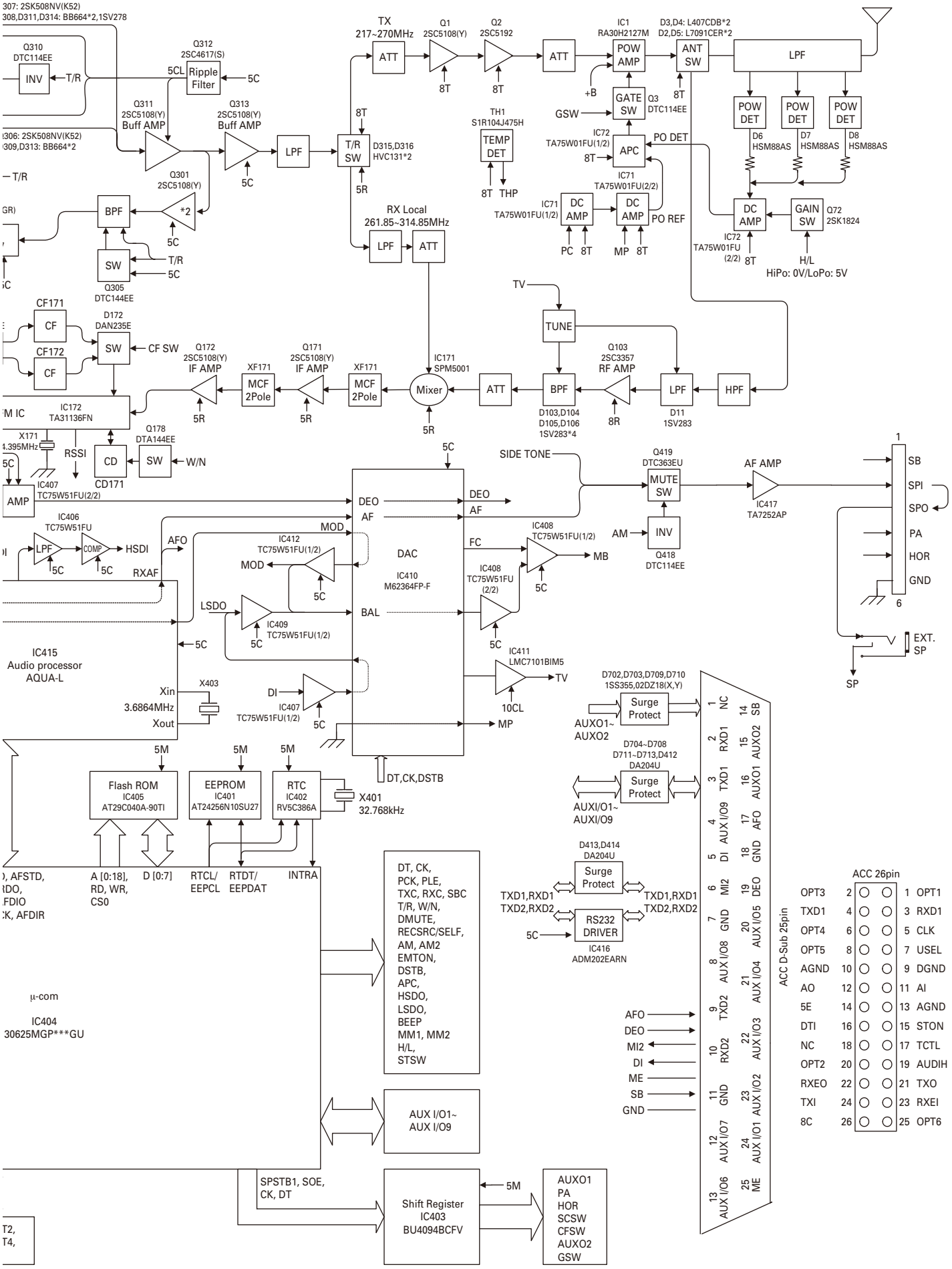
307: 2SK508NV(K52)
308,D311,D314: BB664*2,1SV278
Q310
DTC114EE
INV
T/R
Q312
2SC4617(S)
5CL
Ripple Filter
5C
Q311
2SC5108(Y)
Buff AMP
Q313
2SC5108(Y)
Buff AMP
306: 2SK508NV(K52)
309,D313: BB664*2
T/R
Q301
2SC5108(Y)
BPF
*2
5C
SW
T/R
5C
Q305
DTC144EE
LPF
T/R SW
D315,D316
HVC131*2
8T
5R
TX
217~270MHz
ATT
Q1
2SC5108(Y)
8T
Q2
2SC5192
8T
ATT
IC1
RA30H2127M
POW AMP
D3,D4: L407CDB*2
D2,D5: L7091CER*2
ANT SW
LPF
+B
GATE SW
Q3
DTC114EE
GSW
8T
TH1
S1R104J475H
TEMP DET
8T THP
IC72
TA75W01FU(1/2)
APC
PO DET
8T
IC71
TA75W01FU(2/2)
IC71
TA75W01FU(1/2)
DC AMP
DC AMP
PO REF
PC 8T
MP 8T
POW DET
POW DET
POW DET
D6
HSM88AS
D7
HSM88AS
D8
HSM88AS
DC AMP
GAIN SW
Q72
2SK1824
IC72
TA75W01FU
(2/2)
8T
H/L
HiPo: 0V/LoPo: 5V
RX Local
261.85~314.85MHz
LPF
ATT
TV
TUNE
CF171
CF
D172
DAN235E
SW
CF SW
CF172
CF
Q172
2SC5108(Y)
IF AMP
XF171
MCF
2Pole
Q171
2SC5108(Y)
IF AMP
XF171
MCF
2Pole
IC171
SPM5001
Mixer
5R
ATT
BPF
D103,D104
D105,D106
1SV283*4
Q103
2SC3357
RF AMP
8R
LPF
D11
1SV283
HPF
IC172
TA31136FN
5R
5R
X171
4.395MHz
RSSI
CD
CD171
Q178
DTA144EE
SW
W/N
5C
IC407
TC75W51FU(2/2)
AMP
5C
SIDE TONE
Q419
DTC363EU
MUTE SW
AF AMP
IC417
TA7252AP
1
SB
SPI
SPO
PA
HOR
GND
6
EXT. SP
SP
DEO
AF
DEO
AF
MOD
IC406
TC75W51FU
LPF
COMP
HSDI
5C
5C
RXAF
AFO
IC412
TC75W51FU(1/2)
MOD
5C
DAC
IC410
M62364FP-F
FC
IC408
TC75W51FU(1/2)
MB
5C
AM
INV
Q418
DTC114EE
IC408
TC75W51FU
(2/2)
5C
LSDO
IC409
TC75W51FU(1/2)
5C
BAL
5C
IC415
Audio processor
AQUA-L
5C
IC411
LMC7101BIM5
TV
10CL
X403
Xin
3.6864MHz
Xout
DI
IC407
TC75W51FU(1/2)
5C
MP
D702,D703,D709,D710
1SS355,02DZ18(X,Y)
Surge Protect
AUXO1~
AUXO2
D704~D708
D711~D713,D412
DA204U
Surge Protect
AUXI/O1~
AUXI/O9
5M
5M
5M
Flash ROM
IC405
AT29C040A-90TI
EEPROM
IC401
AT24256N10SU27
RTC
IC402
RV5C386A
X401
32.768kHz
DT,CK,DSTB
AFSTD,
RDO,
FDIO
CK, AFDIR
A [0:18],
RD, WR,
CS0
D [0:7]
RTCL/
EEPCL
RTDT/
EEPDAT
INTRA
DT, CK,
PCK, PLE,
TXC, RXC, SBC
T/R, W/N,
DMUTE,
RECSRC/SELF,
AM, AM2
EMTON,
DSTB,
APC,
HSDO,
LSDO,
BEEP
MM1, MM2
H/L,
STSW
D413,D414
DA204U
Surge Protect
TXD1,RXD1
TXD2,RXD2
TXD1,RXD1
TXD2,RXD2
RS232 DRIVER
5C
IC416
ADM202EARN
μ-com
IC404
30625MGP***GU
AUX I/O1~
AUX I/O9
AFO
DEO
MI2
DI
ME
SB
GND
1 NC
2 RXD1
3 TXD1
4 AUX I/O9
5 DI
6 MI2
7 GND
8 AUX I/O8
9 TXD2
10 RXD2
11 GND
12 AUX I/O7
13 AUX I/O6
14 SB
15 AUXO2
16 AUXO1
17 AFO
18 GND
19 DEO
20 AUX I/O5
21 AUX I/O4
22 AUX I/O3
23 AUX I/O2
24 AUX I/O1
25 ME
ACC D-Sub 25pin
ACC 26pin
OPT3 2 1 OPT1
TXD1 4 3 RXD1
OPT4 6 5 CLK
OPT5 8 7 USEL
AGND 10 9 DGND
AO 12 11 AI
5E 14 13 AGND
DTI 16 15 STON
NC 18 17 TCTL
OPT2 20 19 AUDIH
RXEO 22 21 TXO
TXI 24 23 RXEI
8C 26 25 OPT6
SPSTB1, SOE,
CK, DT
Shift Register
IC403
BU4094BCFV
5M
AUXO1
PA
HOR
SCSW
CFSW
AUXO2
GSW
T2,
T4,

LEVEL DIAGRAM

Receiver Section

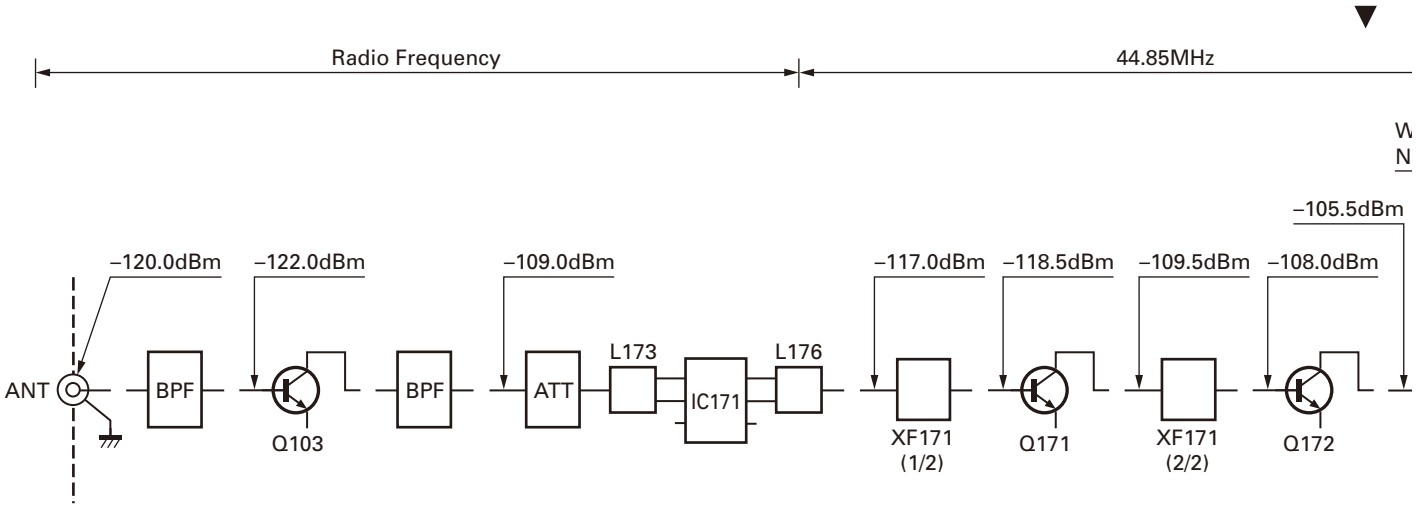

SG input level for 12dB SINAD ar
connecting SG to each point via a

Transmitter Section

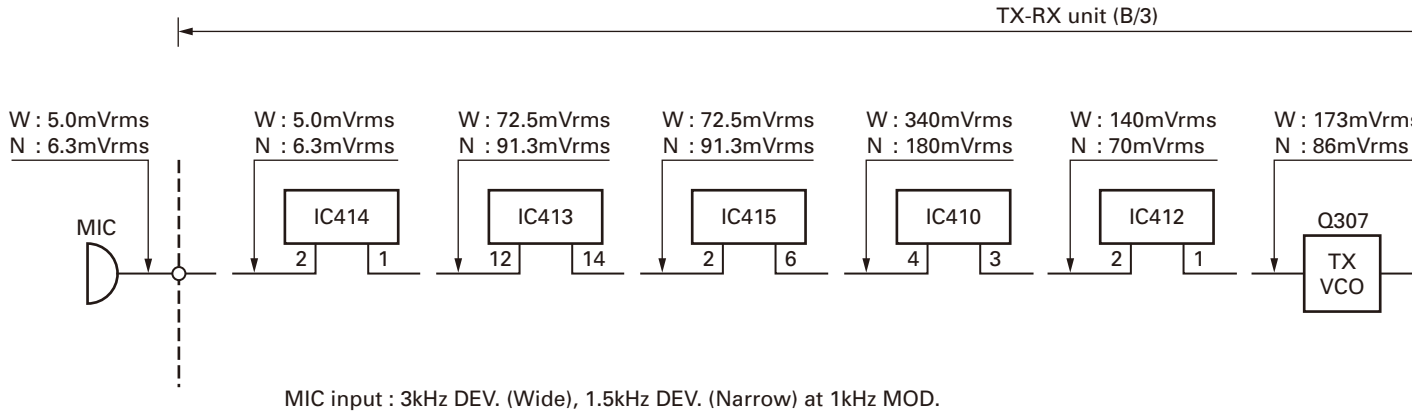

MIC input : 3kHz DEV. (Wide), 1.5kHz DEV. (Narrow) at 1kHz MOD.
Transmitting frequency : Center frequency

LEVEL DIAGRAM

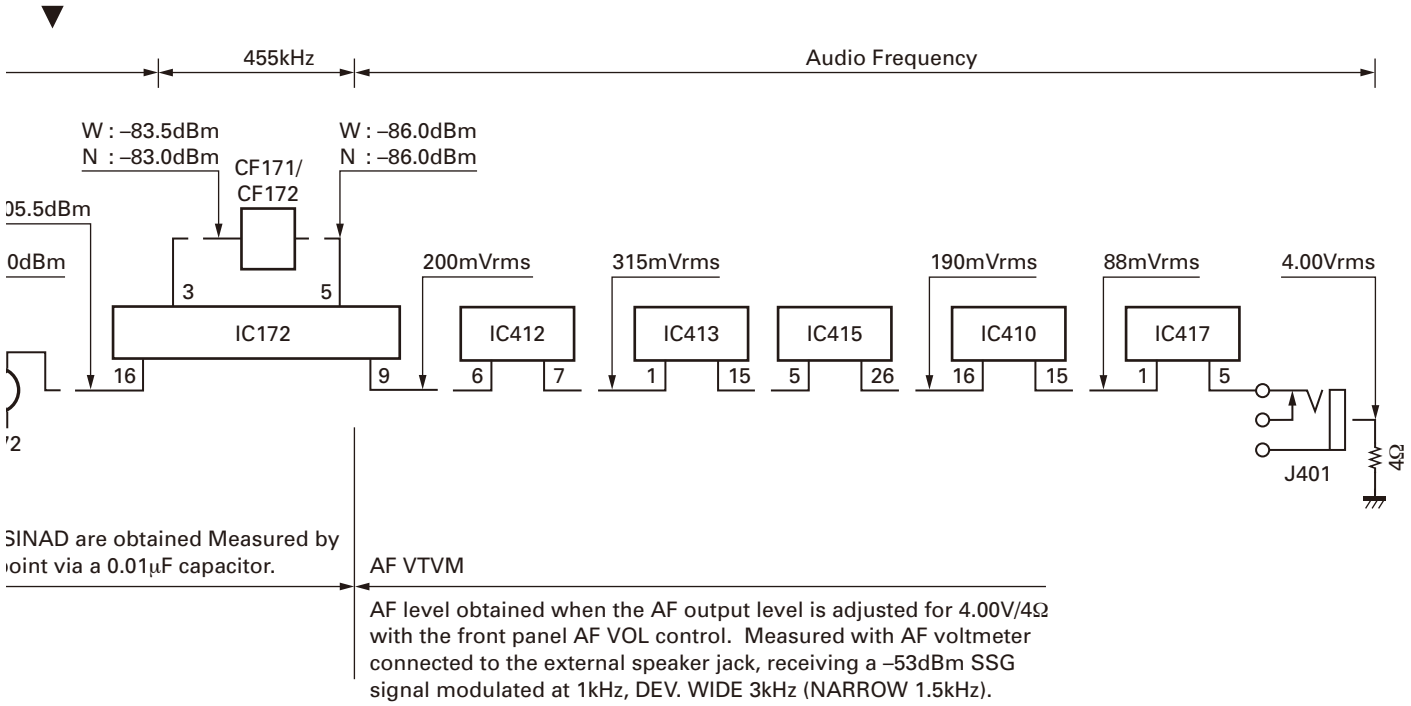

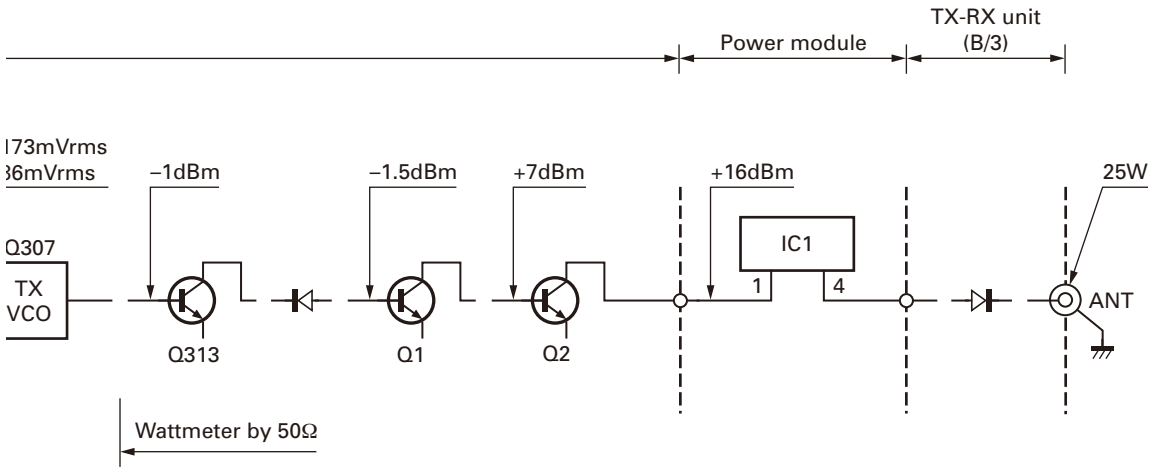

OPTIONAL ACCESSORIES: KRK-10 (Control Head Remote Kit: 23ft/7m)

■ External View

■ Components Description

Ref. No.	Part Name	Description
IC1,2	IC	Buffer amp
D2	Varistor	Current limiter
D3~6	Diode	Surge protect
D9~11	Diode	Surge protect
D12~20	Varistor	Surge protect

■ Parts List

KRK-10 (Y60-4030-20)

Ref. No.	Address	New parts	Parts No.	Description
KRK-10				
1			A62-1101-11	MAIN PANEL
2			A82-0056-21	REAR PANEL
4			E30-7514-15	TRUNK CABLE
5			E37-1447-05	FLAT CABLE
7			F07-1884-03	MOLDING COVER
8			F10-3034-03	SHIELDING PLATE
9			G13-2102-04	CONDUCTIVE CUSHION
10			G53-1676-03	PACKING
11			H12-3163-03	PACKING FIXTURE
12			H25-0029-04	PROTECTION BAG (60/110/0.07)
13			H25-2327-04	PROTECTION BAG (100/250/0.07)
14			H25-2352-04	PROTECTION BAG (250/350/0.07)
15			H52-2042-12	ITEM CARTON CASE
17			J29-0698-03	BRACKET
A			N08-0550-14	DRESSED SCREW
B			N80-2608-48	PAN HEAD TAPTITE SCREW
19			N99-2040-05	SCREW SET
INTERFACE UNIT (X46-3310-20)				
C14			CK73GB1H102K	CHIP C 1000PF K
C41			CK73GB1H102K	CHIP C 1000PF K
CN1			E40-6560-05	FLAT CABLE CONNECTOR
CN2			E40-6558-05	FLAT CABLE CONNECTOR
CN3,4			E40-6377-05	PIN ASSY
L2,3			L40-1091-86	SMALL FIXED INDUCTOR (1.0UH)
L5,6			L40-1091-86	SMALL FIXED INDUCTOR (1.0UH)
R1			RK73GB1J473J	CHIP R 47K J 1/10W
D2			MINISMDC075F24	VARISTOR
D3-6			DA204U	DIODE
D9-11			DA204U	DIODE
D12-20			AVRM16080MAAB	VARISTOR
IC1,2			TC7WT125FUF	MOS IC

OPTIONAL ACCESSORIES: KRK-10 (Control Head Remote Kit: 23ft/7m)

■ Exploded View and Packing

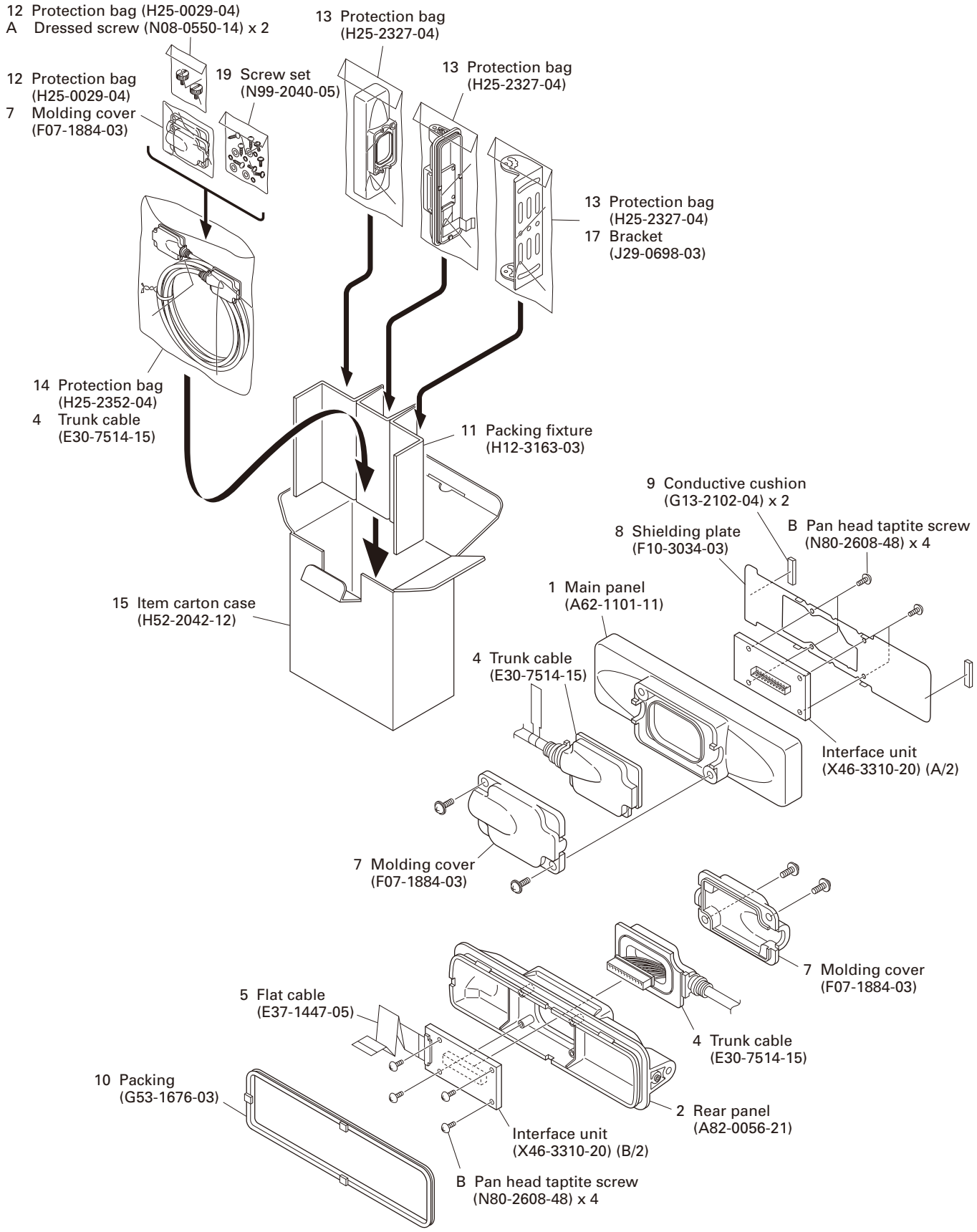

OPTIONAL ACCESSORIES: KRK-10 (Control Head Remote Kit: 23ft/7m)

■ PC Board

INTERFACE UNIT (X46-3310-20)
Component side view (J79-0217-09)

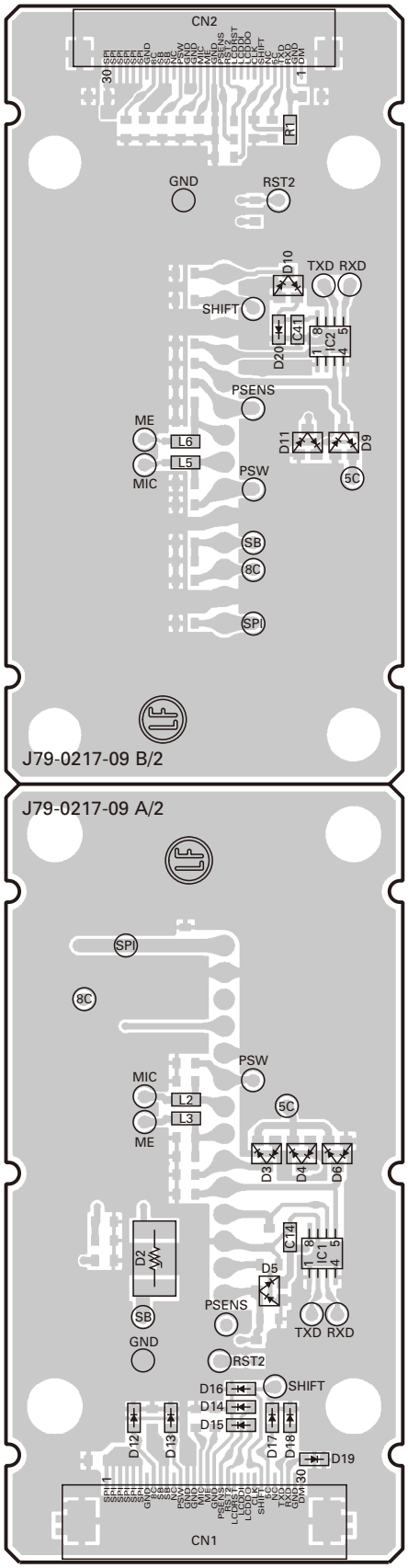

Component side
Layer 1
Layer 2
Foil side

INTERFACE UNIT (X46-3310-20)
Foil side view (J79-0217-09)

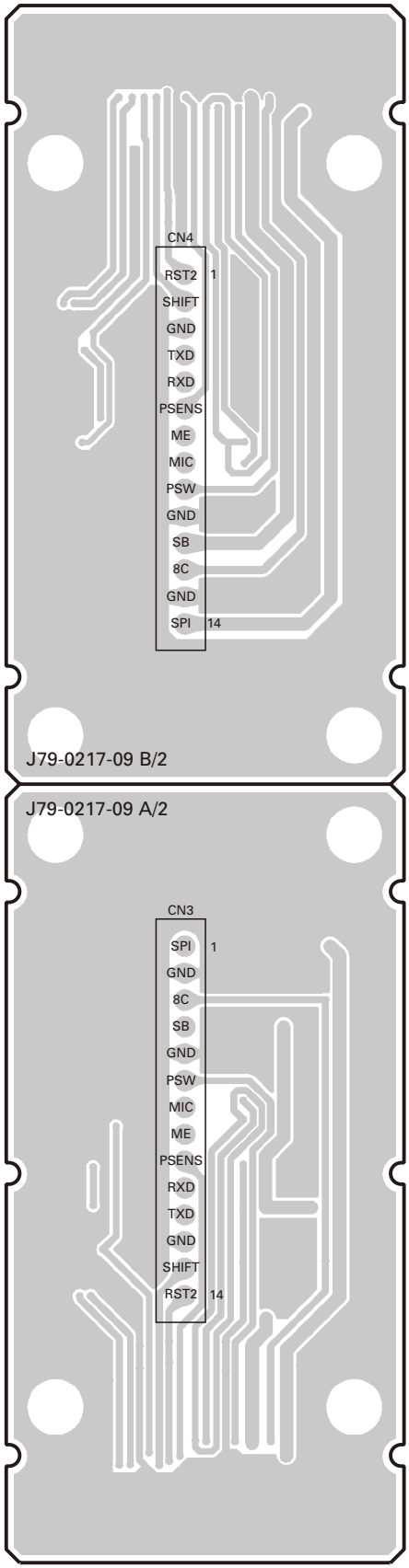

Component side
Layer 1
Layer 2
Foil side

OPTIONAL ACCESSORIES: KRK-10 (Control Head Remote Kit: 23ft/7m)

■ Schematic Diagram

INTERFACE UNIT (X46-3310-20) (A/2)

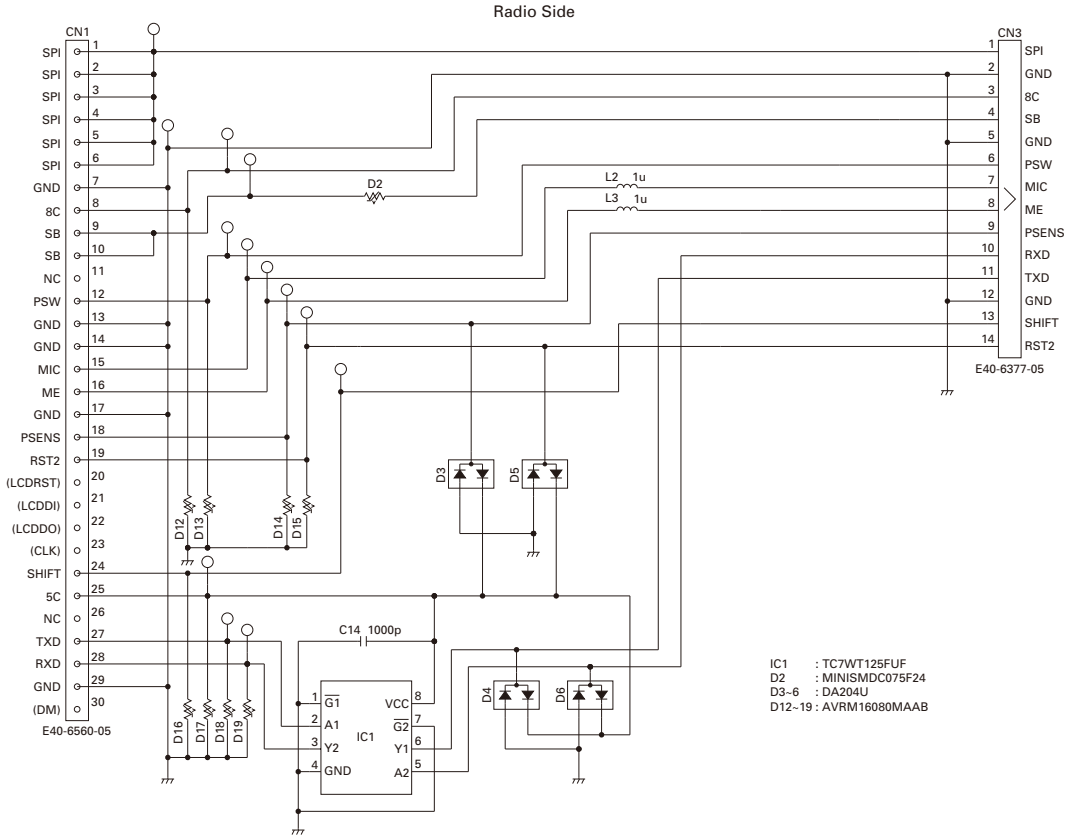

INTERFACE UNIT (X46-3310-20) (B/2)

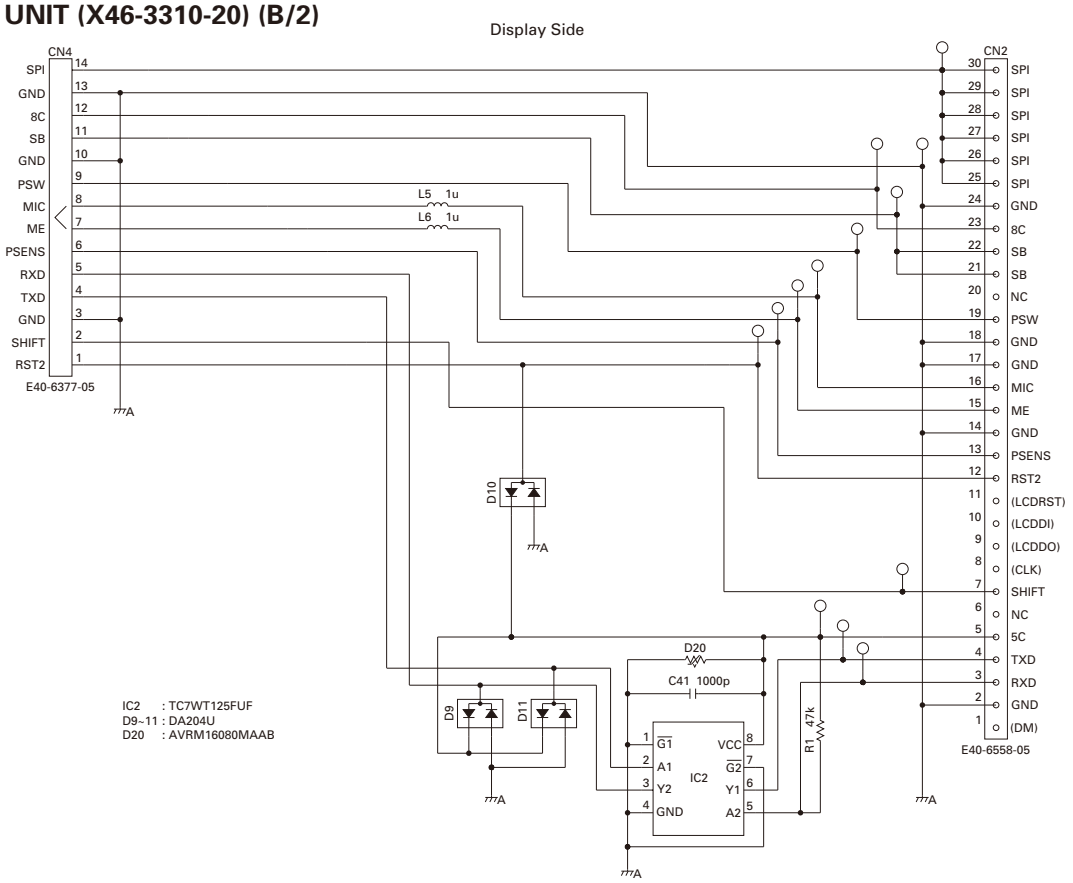

OPTIONAL ACCESSORIES: KRK-10 (Control Head Remote Kit: 23ft/7m)

■ Terminal Function

Pin No.	Name	Description
CN1 (Radio side)		
1	SPI	Speaker input
2	SPI	Speaker input
3	SPI	Speaker input
4	SPI	Speaker input
5	SPI	Speaker input
6	SPI	Speaker input
7	GND	Ground
8	8C	8V input
9	SB	Power input of switched power supply
10	SB	Power input of switched power supply
11	NC	No connection
12	PSW	Detection signal output of power switch
13	GND	Ground
14	GND	Ground
15	MIC	MIC signal output
16	ME	MIC ground
17	GND	Ground
18	PSENS	Detection signal output of display unit
19	RST2	Reset signal input
20	(LCDRST)	Reserve
21	(LCDDI)	Reserve
22	(LCDDO)	Reserve
23	(CLK)	Reserve
24	SHIFT	Control signal input of beat-shift function
25	5C	5V input
26	NC	No connection
27	TXD	Serial data signal input
28	RXD	Serial data signal output
29	GND	Ground
30	(DM)	Reserve
CN2 (Display side)		
1	(DM)	Reserve
2	GND	Ground
3	RXD	Serial data signal input
4	TXD	Serial data signal output
5	5C	5V input
6	NC	No connection
7	SHIFT	Control signal output of beat-shift function
8	(CLK)	Reserve
9	(LCDDO)	Reserve
10	(LCDDI)	Reserve
11	(LCDRST)	Reserve
12	RST2	Reset signal output
13	PSENS	Detection signal input of display unit
14	GND	Ground

Pin No.	Name	Description
15	ME	MIC ground
16	MIC	MIC signal input
17	GND	Ground
18	GND	Ground
19	PSW	Detection signal input of power switch
20	NC	No connection
21	SB	Power output of switched power supply
22	SB	Power output of switched power supply
23	8C	8V output
24	GND	Ground
25	SPI	Speaker output
26	SPI	Speaker output
27	SPI	Speaker output
28	SPI	Speaker output
29	SPI	Speaker output
30	SPI	Speaker output
CN3 (Radio side)		
1	SPI	Speaker output
2	GND	Ground
3	8C	8V output
4	SB	Power output of switched power supply
5	GND	Ground
6	PSW	Detection signal input of power switch
7	MIC	MIC signal input
8	ME	MIC ground
9	PSENS	Detection signal input of display unit
10	RXD	Serial data signal input
11	TXD	Serial data signal output
12	GND	Ground
13	SHIFT	Control signal output of beat-shift function
14	RST2	Reset signal output
CN4 (Display side)		
1	RST2	Reset signal input
2	SHIFT	Control signal input of beat-shift function
3	GND	Ground
4	TXD	Serial data signal input
5	RXD	Serial data signal output
6	PSENS	Detection signal output of display unit
7	ME	MIC ground
8	MIC	MIC signal output
9	PSW	Detection signal output of power switch
10	GND	Ground
11	SB	Power input of switched power supply
12	8C	8V input
13	GND	Ground
14	SPI	Speaker input

OPTIONAL ACCESSORIES

KAP-2 (Horn Alert/P.A. Relay Unit)

■ **External View**

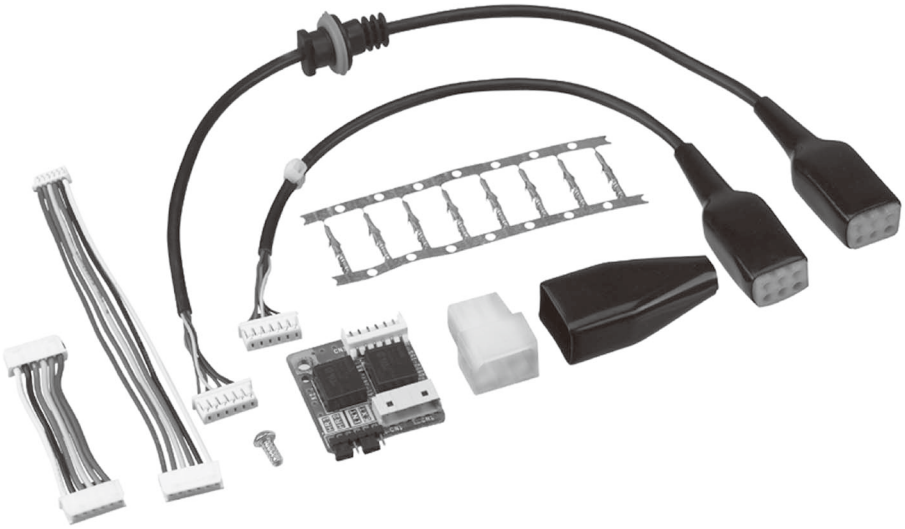

KCT-46 (Ignition Sense Cable)

■ **External View**

KMC-35 (Microphone)

■ **External View**

KMC-36 (Keypad Microphone)

■ **External View**

TK-7185

SPECIFICATIONS

GENERAL

Frequency range.....217~270MHz
Number of channels/Call address
  Conv. mode.....Max. 32 per personal
  Trunked network.....Max. 99 per personal
Channel spacing.....Wide : 25kHz Narrow : 12.5kHz
Operating voltage.....13.2V DC (10.8~15.6V DC)
Current drain
  Standby.....0.4A
  Receive.....1.0A
  Transmit.....9.0A
Operating temperature range.....–30°C~+60°C
Frequency stability.....±2.5ppm (–30°C~+60°C)
Antenna impedance.....50Ω
Channel frequency spread.....53MHz
Dimensions (W x H x D).....160 x 45 x 157 mm
(Projections not included)
Weight (net).....1.5 kg

RECEIVER (Measurements made per EN standard)

Sensitivity
  EIA 12dB SINAD.....Wide : 0.25μV Narrow : 0.28μV
  EN 20dB SINAD.....Wide : –3dBμV Narrow : –2dBμV
Adjacent channel selectivity.....Wide : 80dB Narrow : 70dB
Intermodulation.....70dB
Spurious response rejection.....80dB
Audio output (4Ω impedance).....4W with less than 5% distortion (Typical)

TRANSMITTER (Measurements made per EN standard)

RF output power.....Max. 25W
Modulation limiting.....Wide : ±5.0kHz at 25kHz Narrow : ±2.5kHz at 12.5kHz
Spurious emission.....–36dBm ≤ 1GHz, –30dBm > 1GHz
FM noise (EIA).....Wide : 50dB Narrow : 45dB
Modulation distortion.....Less than 3%
Microphone impedance.....600Ω

Kenwood Corporation

2967-3, Ishikawa-machi, Hachioji-shi, Tokyo, 192-8525 Japan

Kenwood U.S.A. Corporation
P.O. BOX 22745, 2201 East Dominguez Street, Long Beach, CA 90801-5745, U.S.A.

Kenwood Electronics Canada Inc.
6070 Kestrel Road, Mississauga, Ontario, Canada L5T 1S8

Kenwood Electronics Deutschland GmbH
Rembrücker Str. 15, 63150 Heusenstamm, Germany

Kenwood Electronics Belgium N.V.
Leuvensesteenweg 248 J, 1800 Vilvoorde, Belgium

Kenwood Electronics France S.A.
L'Etoile Paris Nord 2, 50 Allée des Impressionnistes, Bp 58416 Villepinte, 95944 Roissy Ch De Gaulle Cedex

Kenwood Electronics UK Limited
KENWOOD House, Dwight Road, Watford, Herts., WD18 9EB United Kingdom

Kenwood Electronics Europe B.V.
Amsterdamseweg 37, 1422 AC Uithoorn, The Netherlands

Kenwood Electronics Italia S.p.A.
Via G. Sirtori, 7/9 20129 Milano, Italy

Kenwood Ibérica, S.A.
Bolivia, 239-08020 Barcelona, Spain

Kenwood Electronics Australia Pty. Ltd.
(A.C.N. 001 499 074)
16 Giffnock Avenue, Centrecourt Estate, North Ryde, N.S.W. 2113 Australia

Kenwood Electronics (Hong Kong) Ltd.
Unit 3712-3724, Level 37, Tower one Metroplaza, 223 Hing Fong Road, Kwai Fong, N.T., Hong Kong

Kenwood Electronics Singapore Pte Ltd
1 Ang Mo Kio Street 63, Singapore 569110

25%

TK-7185 PC BOARD

PC BOARD TK-7185

DISPLAY UNIT (X54-3480-10)
Component side view (J72-0932-19)

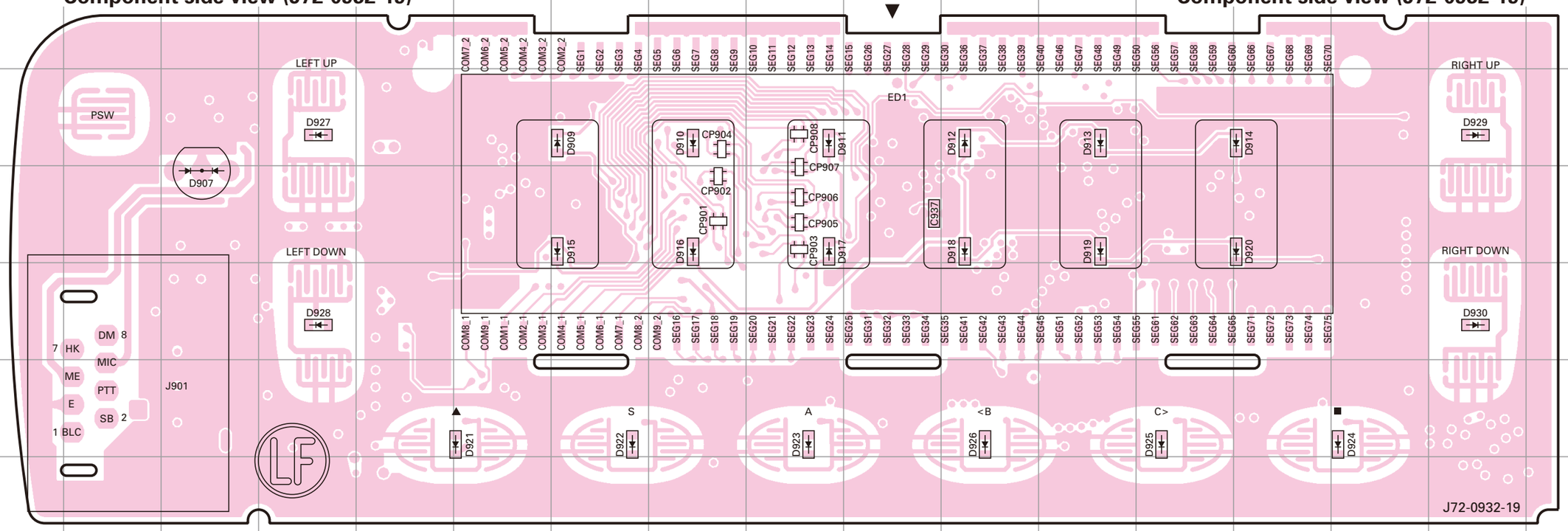

Ref. No.	Address	Ref. No.	Address
D907	4C	D920	4N
D909	3G	D921	6F
D910	3H	D922	6G
D911	3I	D923	6I
D912	3K	D924	6O
D913	3L	D925	6M
D914	3N	D926	6K
D915	4G	D927	3D
D916	4H	D928	5D
D917	4I	D929	3P
D918	4K	D930	5P
D919	4L		

Component side
Layer 1
Layer 2
Layer 3
Layer 4
Foil side

DISPLAY UNIT (X54-3480-10)
Foil side view (J72-0932-19)

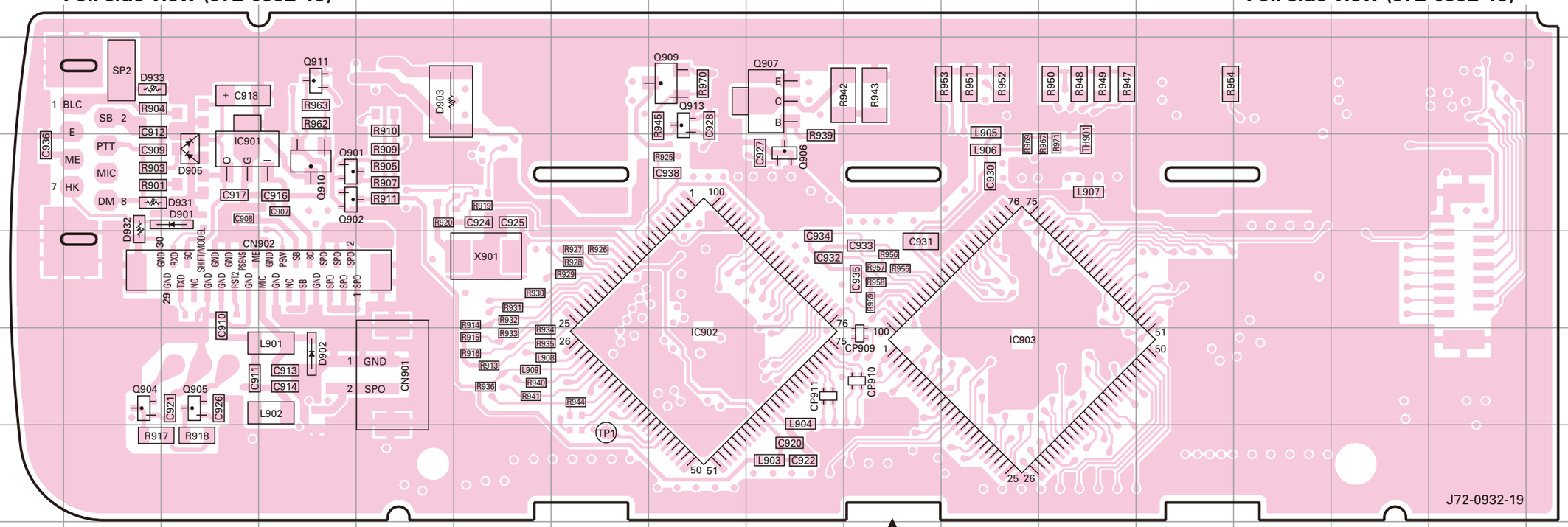

Ref. No.	Address	Ref. No.	Address
IC901	10C	Q910	10D
IC902	12H	Q911	9D
IC903	12K	Q913	9H
Q901	10D	D901	10C
Q902	10D	D902	12D
Q904	12B	D903	9E
Q905	12C	D905	10C
Q906	10I	D931	10B
Q907	9I	D932	10B
Q909	9H	D933	9B

Component side
Layer 1
Layer 2
Layer 3
Layer 4
Foil side

TK-7185 PC BOARD

TX-RX UNIT (X57-6982-72) (A/3) Component side view (J79-0117-19 A/3)

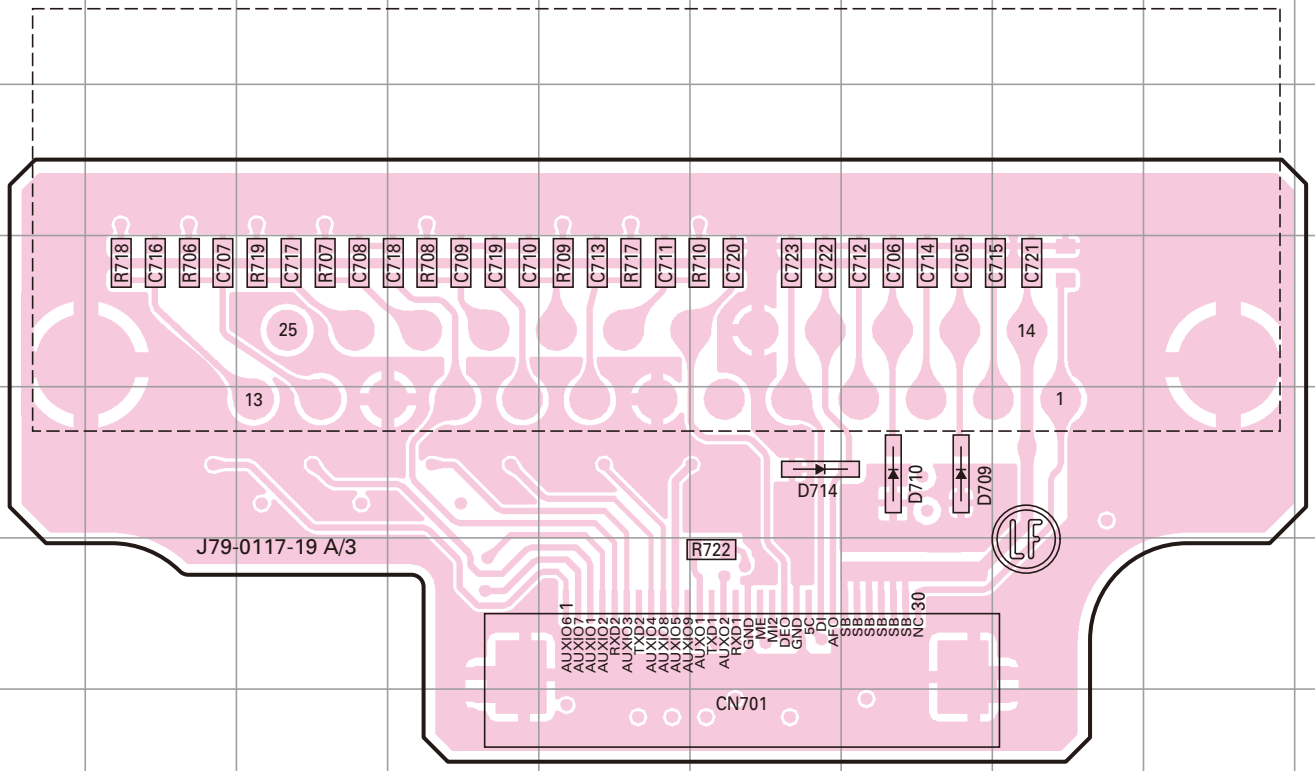

Ref. No.	Address
D709	5G
D710	5G
D714	5F

Component side
Layer 1
Layer 2
Layer 3
Layer 4
Foil side

TX-RX UNIT (X57-6982-72) (C/3) Component side view (J79-0117-19 C/3)

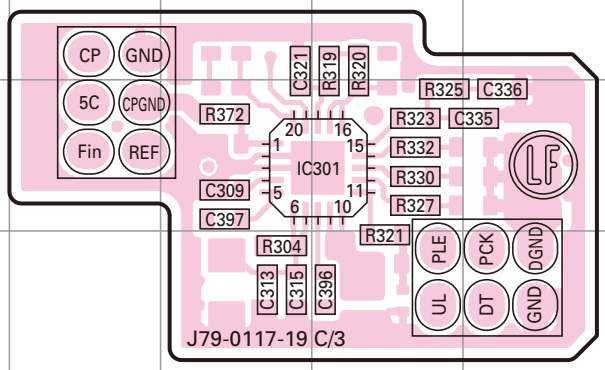

Ref. No.	Address
IC301	11E

Component side
Layer 1
Layer 2
Layer 3
Layer 4
Foil side

PC BOARD TK-7185

TX-RX UNIT (X57-6982-72) (A/3) Foil side view (J79-0117-19 A/3)

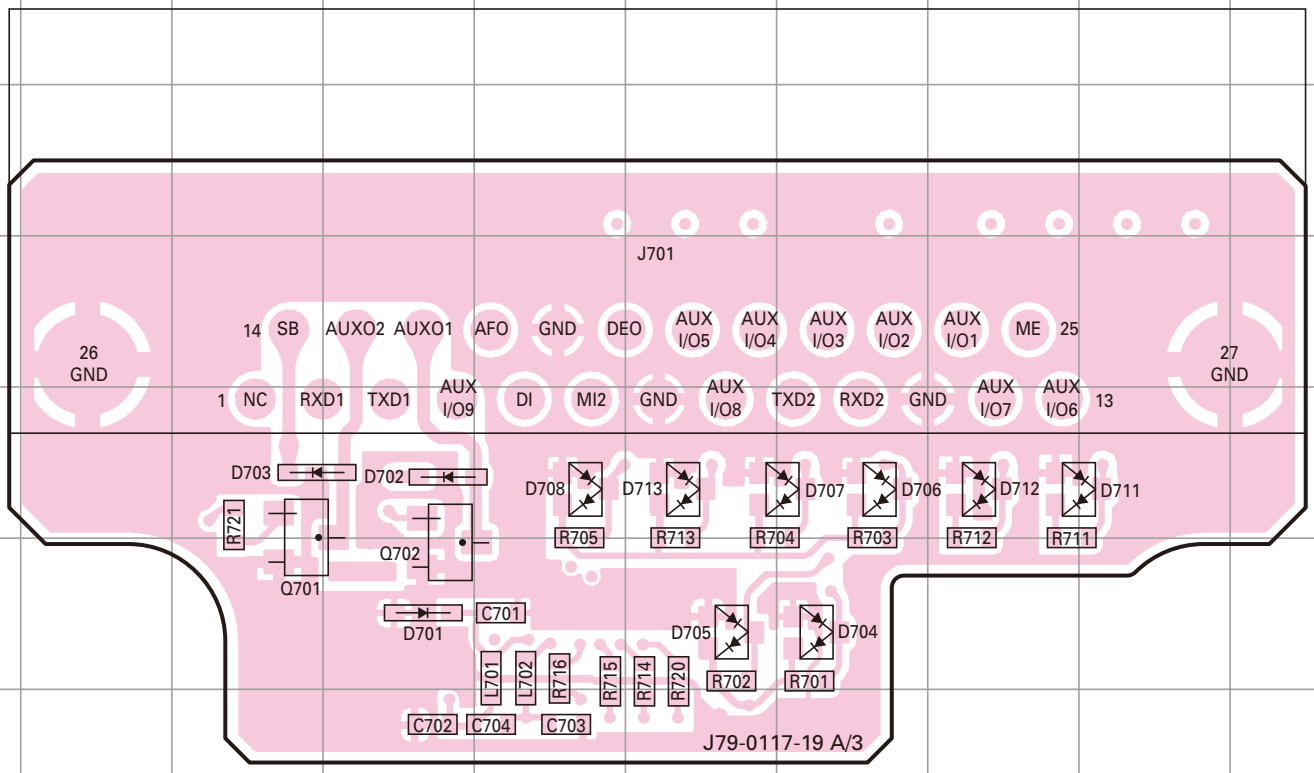

Ref. No.	Address	Ref. No.	Address	Ref. No.	Address
Q701	6C	D704	6G	D711	5I
Q702	6D	D705	6F	D712	5H
D701	6D	D706	5G	D713	5F
D702	5D	D707	5G		
D703	5C	D708	5E		

Component side
Layer 1
Layer 2
Layer 3
Layer 4
Foil side

TX-RX UNIT (X57-6982-72) (C/3) Foil side view (J79-0117-19 C/3)

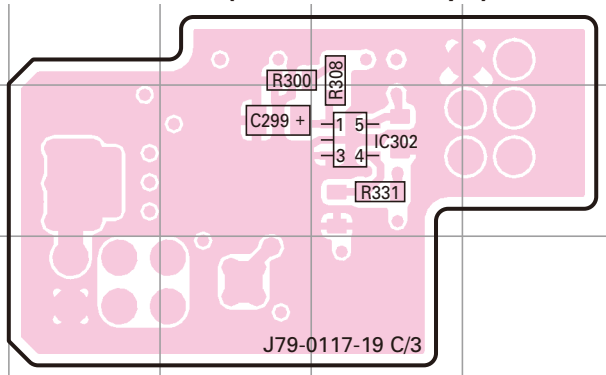

Ref. No.	Address
IC302	11E

Component side
Layer 1
Layer 2
Layer 3
Layer 4
Foil side

TK-7185 PC BOARD

TX-RX UNIT (X57-6982-72) (B/3)
Component side view (J79-0117-19 B/3)

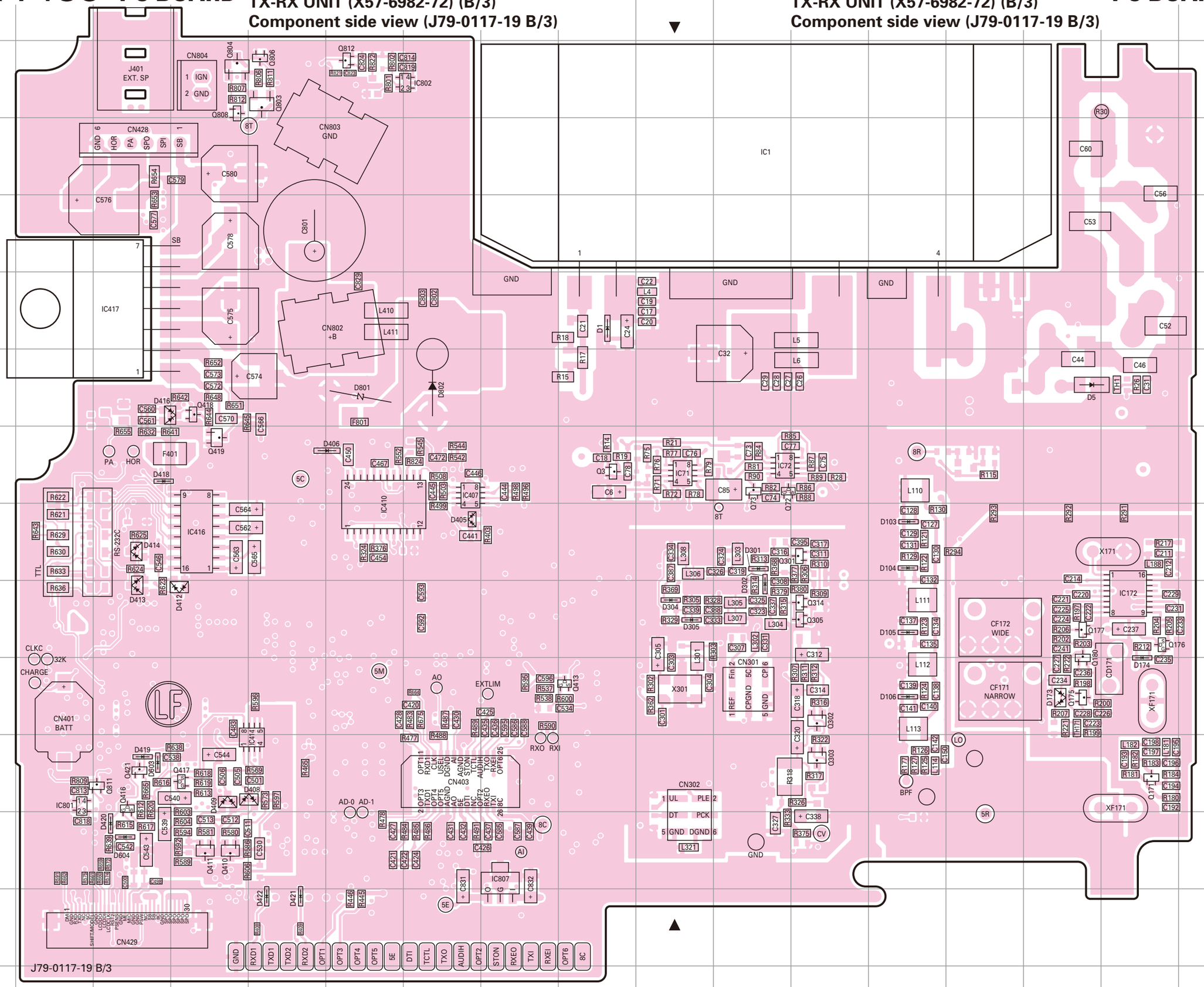

TX-RX UNIT (X57-6982-72) (B/3)
Component side view (J79-0117-19 B/3)

PC BOARD TK-7185

Ref. No.	Address	Ref. No.	Address
IC1	3K	Q804	2D
IC71	7J	Q806	2E
IC72	7K	Q808	2D
IC172	9P	Q811	11C
IC407	7G	Q812	2F
IC410	8F	D1	5I
IC414	11E	D5	6O
IC416	8D	D103	8M
IC417	5C	D104	8M
IC801	11B	D105	9M
IC802	2G	D106	10M
IC807	12H	D173	10O
Q3	7I	D174	10P
Q72	7K	D301	8K
Q73	7K	D302	9K
Q171	11P	D304	9J
Q175	10O	D305	9J
Q176	9P	D405	8G
Q177	9O	D406	7F
Q180	10O	D408	11E
Q301	8L	D409	11D
Q302	10L	D412	9D
Q303	11L	D413	9C
Q305	9L	D414	8C
Q314	9L	D416	6C
Q410	12D	D418	7C
Q411	12D	D419	11C
Q413	10I	D420	12C
Q416	11C	D421	13E
Q417	11D	D422	13E
Q418	6D	D603	11C
Q419	7D	D604	12C
Q421	11C	D801	6F
Q803	2E	D802	6G

Component side
Layer 1
Layer 2
Layer 3
Layer 4
Foil side

TK-7185 PC BOARD

TX-RX UNIT (X57-6982-72) (B/3)
Foil side view (J79-0117-19 B/3)

Ref. No.	Address	Ref. No.	Address
IC171	11F	Q409	9K
IC251	12J	Q412	11L
IC401	10R	Q414	12L
IC402	9R	Q415	12K
IC403	9N	Q801	6P
IC404	11P	Q802	3P
IC405	11N	Q805	2O
IC406	8O	Q807	3O
IC408	7O	Q809	2O
IC409	8L	Q810	4P
IC411	8M	D2	6D
IC412	11L	D3	6F
IC413	12M	D4	5F
IC415	9L	D6	6D
IC803	3R	D7	4D
IC804	2M	D8	3D
IC805	6P	D11	7E
Q1	7I	D171	9E
Q2	7J	D172	10F
Q103	7F	D251	12J
Q172	9D	D308	11J
Q173	9F	D309	11H
Q174	9E	D311	11J
Q178	10E	D313	11H
Q251	12I	D314	9J
Q306	9H	D315	9H
Q307	9J	D316	8H
Q308	9I	D402	9R
Q309	9K	D403	10R
Q310	9J	D404	9R
Q311	8J	D407	12L
Q312	11I	D417	9Q
Q313	8I	D423	9Q
Q402	11R	D804	3P
Q405	10M	D805	6O
Q406	10K		

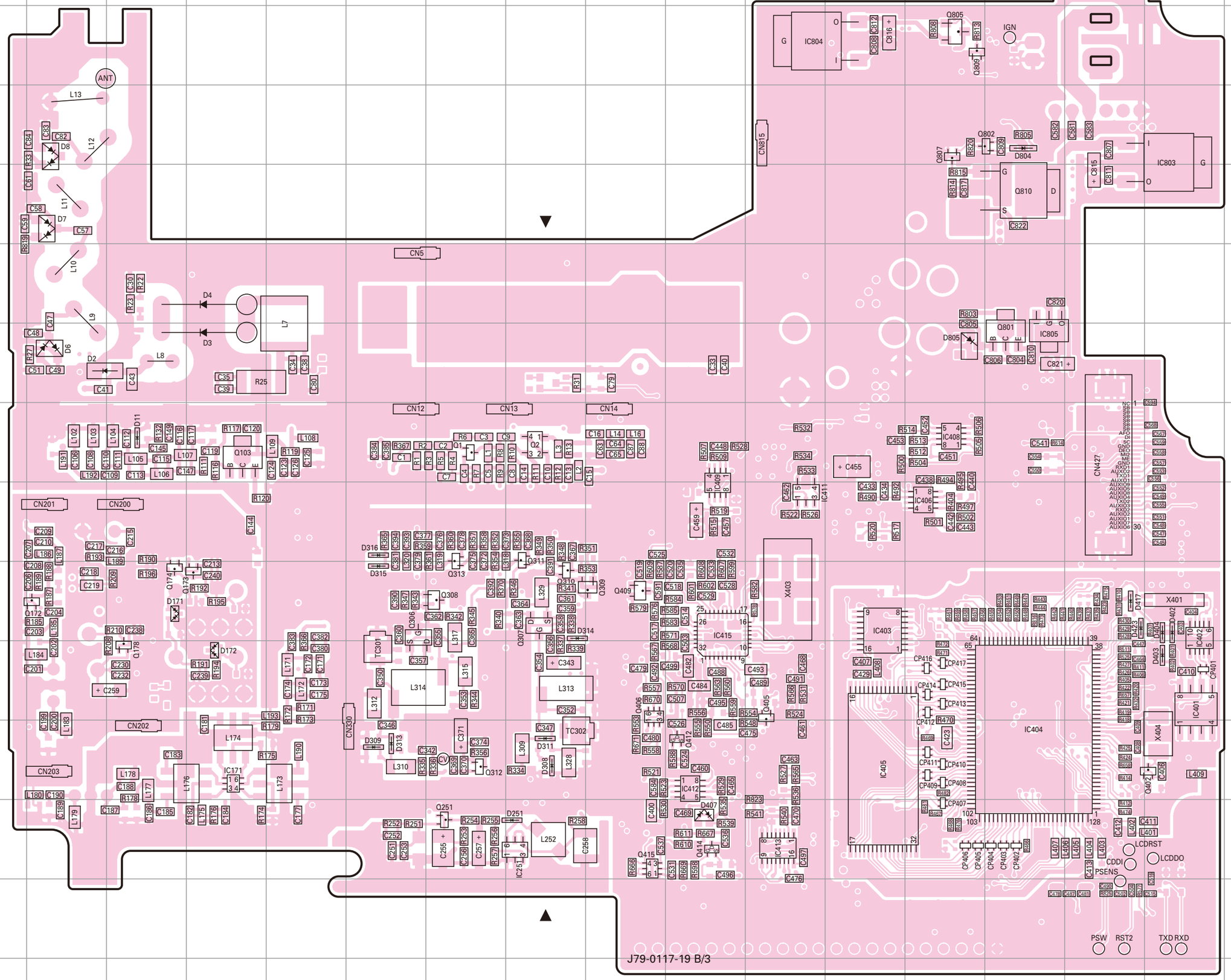

Component side
Layer 1
Layer 2
Layer 3
Layer 4
Foil side

TX-RX UNIT (X57-6982-72) (B/3)
Foil side view (J79-0117-19 B/3)
PC BOARD TK-7185

DISPLAY UNIT (X54-3480-10)

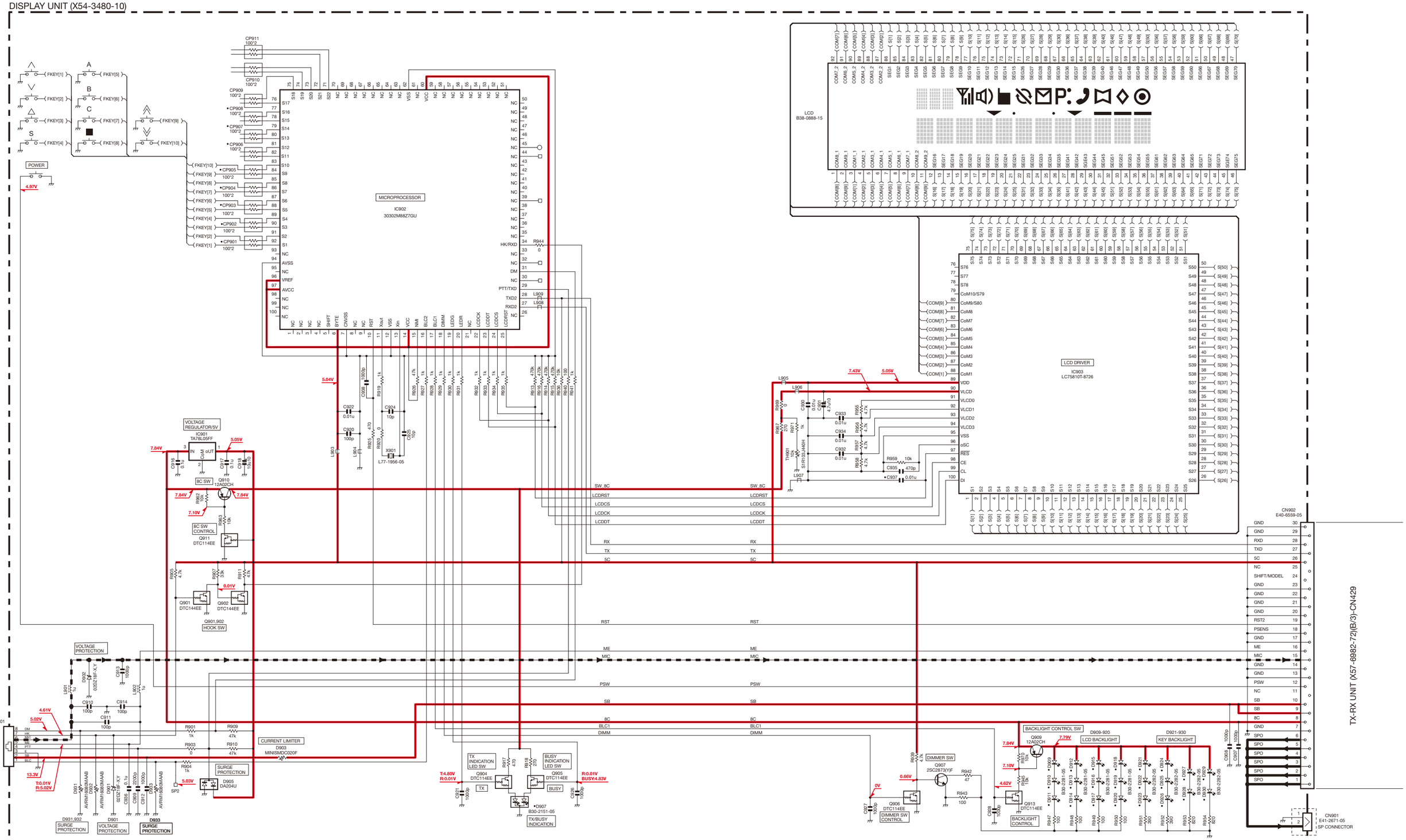

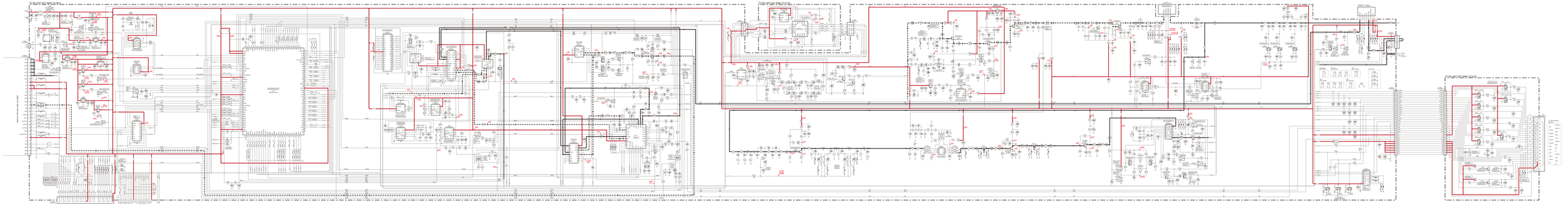

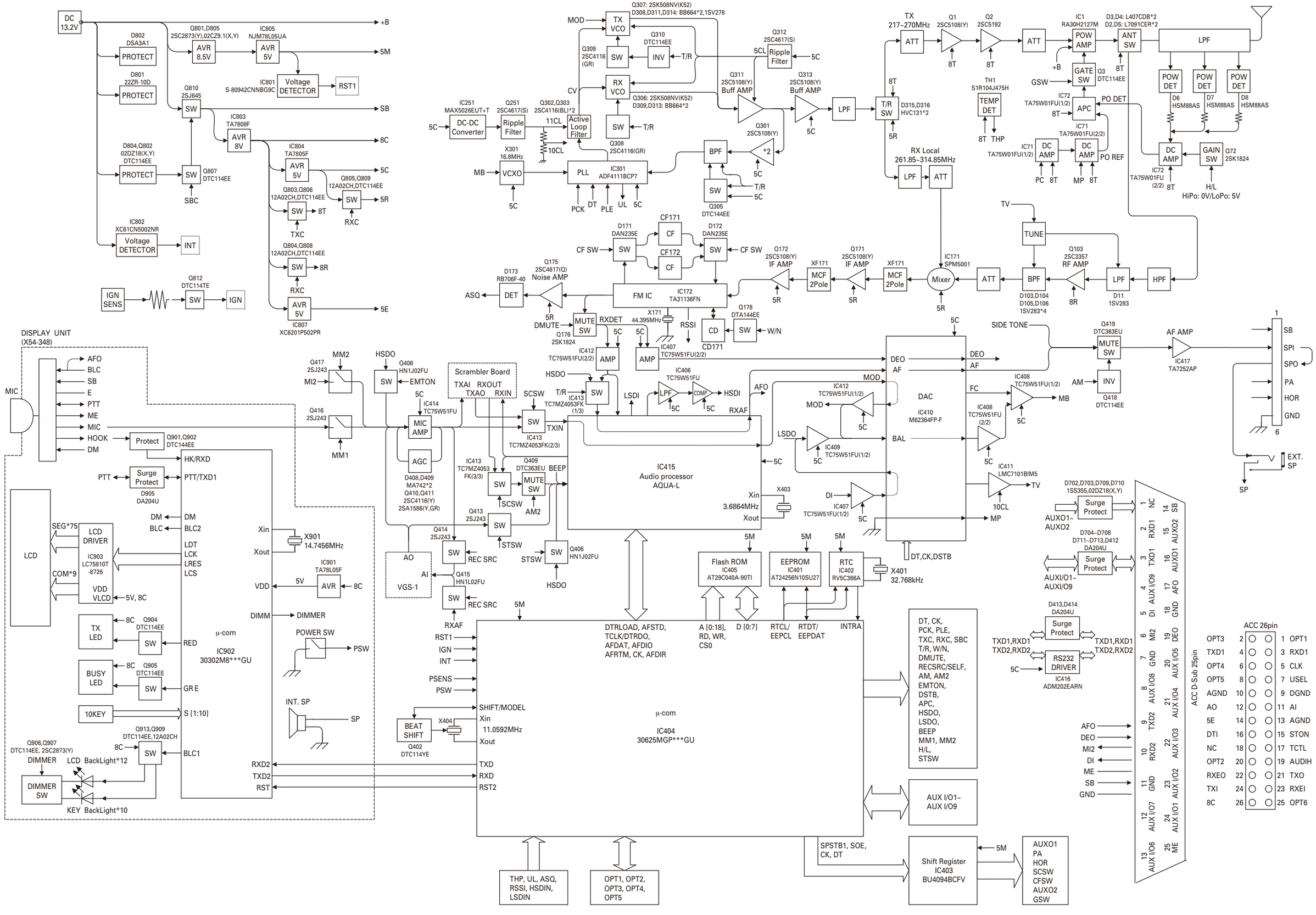
DC 13.2V
+B
5M
SB
8C
5C
5R
8R
5E
D802 DSA3A1
PROTECT
D801 22ZR-10D
PROTECT
Q801,D805 2SC2873(Y),02CZ9.1(X,Y)
AVR 8.5V
IC805 NJM78L05UA
AVR 5V
IC801 S-80942CNNBG9C
Voltage DETECTOR
RST1
Q810 2SJ645
SW
IC803 TA7808F
AVR 8V
D804,Q802 02DZ18(X,Y) DTC114EE
PROTECT
SW
Q807 DTC114EE
SBC
IC804 TA7805F
AVR 5V
Q805,Q809 12A02CH,DTC114EE
Q803,Q806 12A02CH,DTC114EE
8T
TXC
RXC
Q804,Q808 12A02CH,DTC114EE
IC802 XC61CN5002NR
Voltage DETECTOR
INT
IGN SENS
Q812 DTC114TE
IGN
IC807 XC6201P502PR
Q307: 2SK508NV(K52) D308,D311,D314: BB664*2,1SV278
MOD
TX VCO
Q309 2SC4116 (GR)
Q310 DTC114EE
INV
T/R
Q312 2SC4617(S)
5CL
Ripple Filter
RX VCO
CV
Q306: 2SC508NV(K52) D309,D313: BB664*2
Q311 2SC5108(Y) Buff AMP
Q313 2SC5108(Y) Buff AMP
IC251 MAX5026EUT+T
DC-DC Converter
Q251 2SC4617(S)
Ripple Filter
Q302,Q303 2SC4116(BL)*2
11CL
Active Loop Filter
10CL
Q308 2SC4116(GR)
Q301 2SC5108(Y)
*2
X301 16.8MHz
MB
VCXO
PLL
IC301 ADF4111BCP7
PCK
DT
PLE
UL
BPF
Q305 DTC144EE
LPF
TX 217~270MHz
ATT
Q1 2SC5108(Y)
Q2 2SC5192
IC1 RA30H2127M
POW AMP
D3,D4: L407CDB*2 D2,D5: L7091CER*2
ANT SW
GATE SW
Q3 DTC114EE
GSW
TH1 S1R104J475H
TEMP DET
THP
IC72 TA75W01FU(1/2)
APC
PO DET
IC71 TA75W01FU(2/2)
IC71 TA75W01FU(1/2)
DC AMP
PO REF
PC
MP
POW DET
D6 HSM88AS
D7 HSM88AS
D8 HSM88AS
GAIN SW
Q72 2SK1824
IC72 TA75W01FU (2/2)
H/L
HiPo: 0V/LoPo: 5V
T/R SW
D315,D316 HVC131*2
RX Local 261.85~314.85MHz
TV
TUNE
Q103 2SC3357 RF AMP
D103,D104 D105,D106 1SV283*4
D11 1SV283
HPF
D171 DAN235E
CF171
CF
CF172
D172 DAN235E
CF SW
Q175 2SC4617(Q) Noise AMP
D173 RB706F-40
DET
ASQ
FM IC
IC172 TA31136FN
Q172 2SC5108(Y) IF AMP
XF171
MCF 2Pole
Q171 2SC5108(Y) IF AMP
IC171 SPM5001
Mixer
DMUTE
MUTE SW
Q176 2SK1824
RXDET
X171 44.395MHz
RSSI
CD
CD171
Q178 DTA144EE
W/N
IC412 TC75W51FU(2/2)
AMP
IC407 TC75W51FU(2/2)
DISPLAY UNIT (X54-348)
MIC
AFO
BLC
SB
E
PTT
ME
MIC
HOOK
DM
Protect
Q901,Q902 DTC144EE
HK/RXD
PTT
Surge Protect
PTT/TXD1
D905 DA204U
LCD
SEG*75
LCD DRIVER
IC903 LC75810T -8726
COM*9
VDD
VLCD
5V, 8C
TX LED
Q904 DTC114EE
RED
BUSY LED
Q905 DTC114EE
GR E
10KEY
S [1:10]
Q913,Q909 DTC114EE,12A02CH
Q906,Q907 DTC114EE, 2SC2873(Y)
DIMMER
LCD BackLight*12
DIMMER SW
KEY BackLight*10
BLC1
μ-com
IC902 30302M8***GU
Xin
Xout
X901 14.7456MHz
VDD
5V
IC901 TA78L05F
AVR
DIMM
DIMMER
POWER SW
PSW
INT. SP
SP
Q417 2SJ243
MM2
MI2
Q416 2SJ243
MM1
HSDO
Q406 HN1J02FU
EMTON
Scrambler Board
TXAI
RXOUT
TXAO
RXIN
IC414 TC75W51FU
MIC AMP
AGC
D408,D409 MA742*2 Q410,Q411 2SC4116(Y) 2SA1586(Y,GR)
SCSW
IC413 TC7MZ4053FK(1/3)
IC413 TC7MZ4053FK(2/3)
TXIN
LSDI
IC406 TC75W51FU
LPF
COMP
HSDI
AFO
RXAF
IC413 TC7MZ4053 FK(3/3)
Q409 DTC363EU
MUTE SW
BEEP
AM2
Q413 2SJ243
STSW
Q414 2SJ243
REC SRC
Q415 HN1L02FU
AO
AI
VGS-1
RXAF
RST1
IGN
INT
PSENS
PSW
BEAT SHIFT
X404
Q402 DTC114YE
SHIFT/MODEL
Xin
11.0592MHz
Xout
TXD
RXD
RST2
RXD2
TXD2
RST
IC415 Audio processor AQUA-L
X403
3.6864MHz
DEO
AF
FC
BAL
DAC
IC410 M62364FP-F
IC412 TC75W51FU(1/2)
IC408 TC75W51FU(1/2)
IC408 TC75W51FU (2/2)
IC409 TC75W51FU(1/2)
IC407 TC75W51FU(1/2)
IC411 LMC7101BIM5
10CL
DI
MP
DT,CK,DSTB
SIDE TONE
Q419 DTC363EU
MUTE SW
AF AMP
IC417 TA7252AP
AM
INV
Q418 DTC114EE
SB
SPI
SPO
PA
HOR
GND
EXT. SP
SP
Flash ROM IC405 AT29C040A-90TI
EEPROM IC401 AT24256N10SU27
RTC IC402 RV5C386A
X401 32.768kHz
DTRLOAD, AFSTD, TCLK/DTRDO, AFDAT, AFDIO AFRTM, CK, AFDIR
A [0:18], RD, WR, CS0
D [0:7]
RTCL/ EEPCL
RTDT/ EEPDAT
INTRA
μ-com
IC404 30625MGP***GU
DT, CK, PCK, PLE, TXC, RXC, SBC T/R, W/N, DMUTE, RECSRC/SELF, AM, AM2 EMTON, DSTB, APC, HSDO, LSDO, BEEP MM1, MM2 H/L, STSW
AUX I/O1~ AUX I/O9
SPSTB1, SOE, CK, DT
Shift Register IC403 BU4094BCFV
AUXO1 PA HOR SCSW CFSW AUXO2 GSW
THP, UL, ASQ, RSSI, HSDIN, LSDIN
OPT1, OPT2, OPT3, OPT4, OPT5
D702,D703,D709,D710 1SS355,02DZ18(X,Y)
AUXO1~ AUXO2
D704~D708 D711~D713,D412 DA204U
AUXI/O1~ AUXI/O9
D413,D414 DA204U
TXD1,RXD1
TXD2,RXD2
RS232 DRIVER
IC416 ADM202EARN
ACC D-Sub 25pin
ACC 26pin
OPT3 2 1 OPT1
TXD1 4 3 RXD1
OPT4 6 5 CLK
OPT5 8 7 USEL
AGND 10 9 DGND
AO 12 11 AI
5E 14 13 AGND
DTI 16 15 STON
NC 18 17 TCTL
OPT2 20 19 AUDIH
RXEO 22 21 TXO
TXI 24 23 RXEI
8C 26 25 OPT6

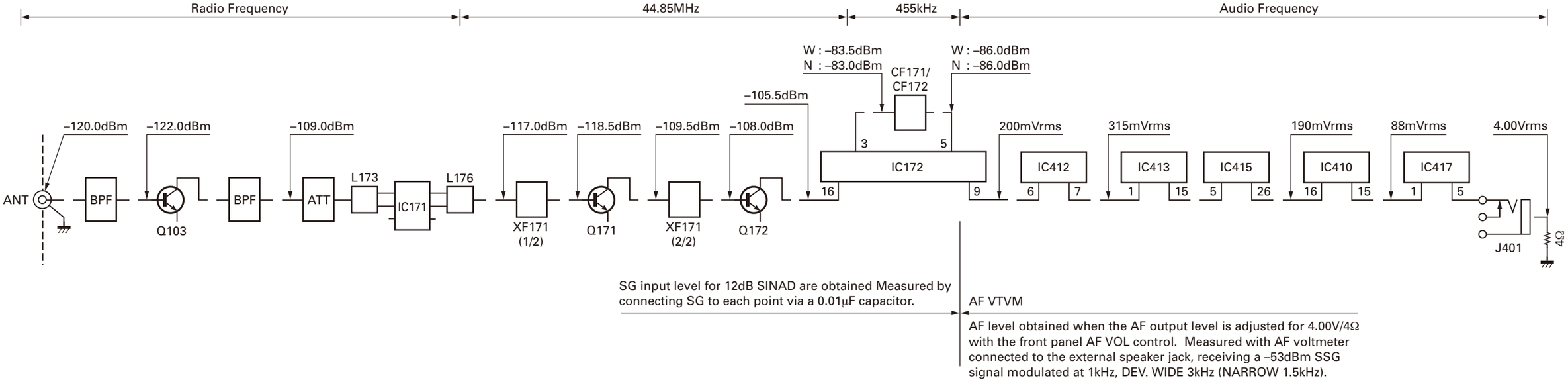

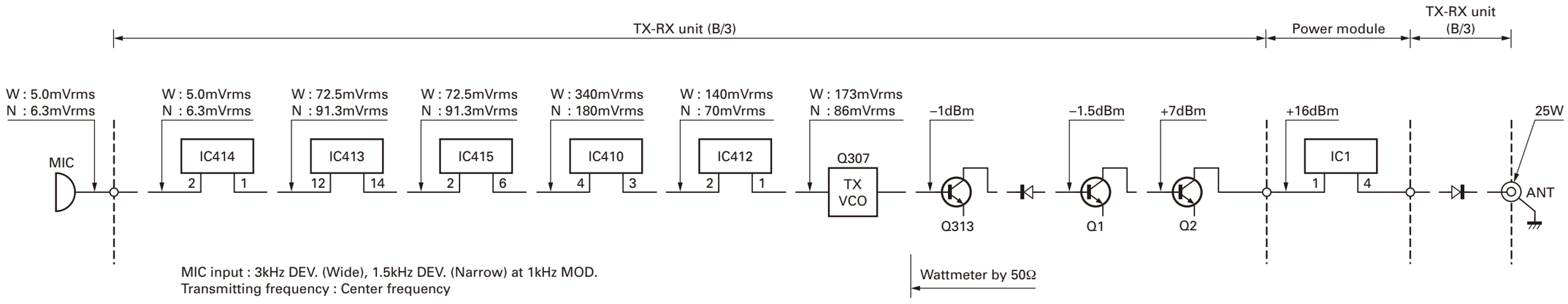

MIC input : 3kHz DEV. (Wide), 1.5kHz DEV. (Narrow) at 1kHz MOD.
Transmitting frequency : Center frequency