MOTOROLA
test equipment

COMMUNICATIONS SYSTEM ANALYZER

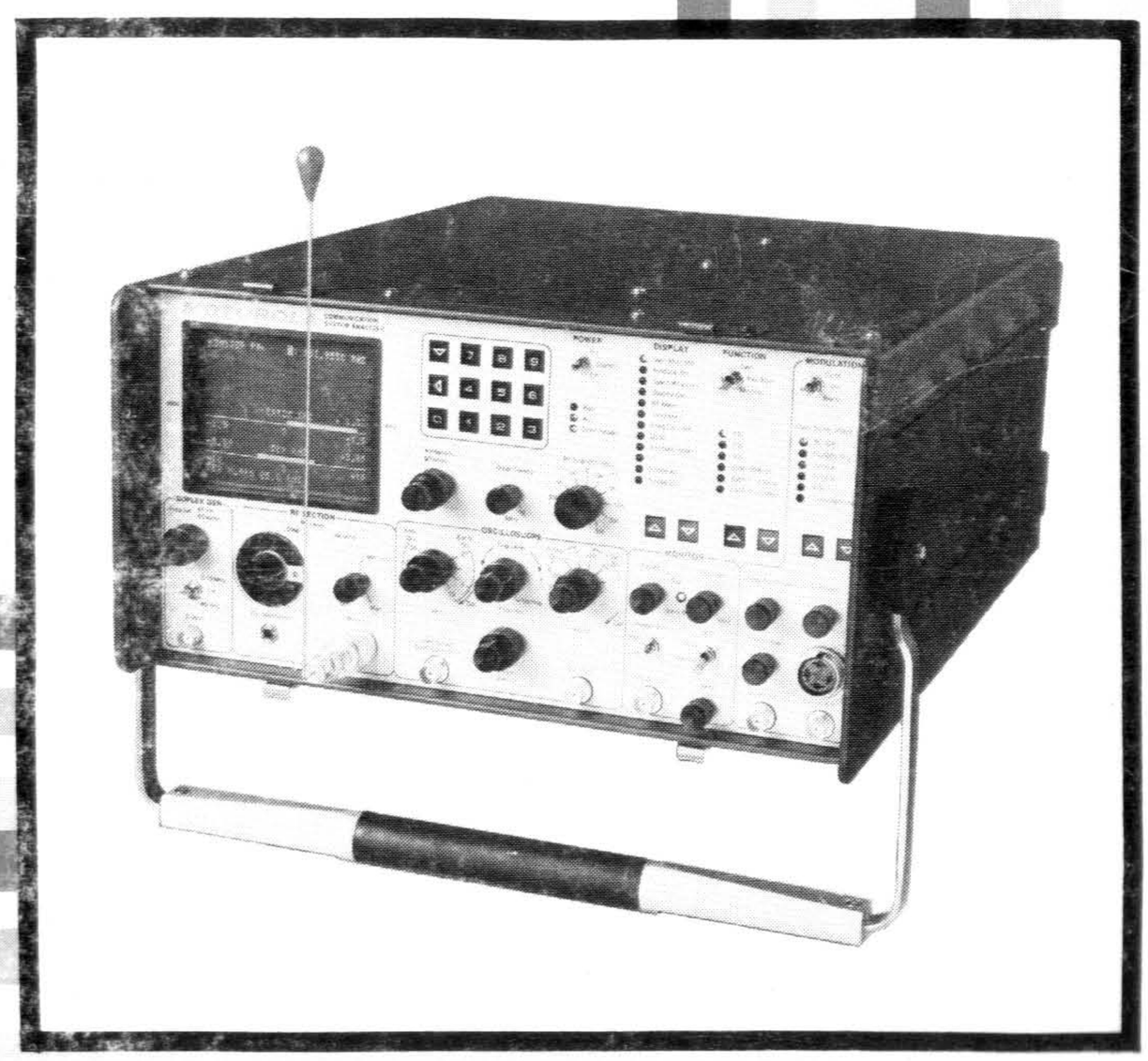

R-2001B/R-2002B

68P81069A93-O

TABLE OF CONTENTS

Paragraph		Page
	FOREWORD	1
	SECTION 1	
1-1	Introduction	1-1
	SECTION 2 — DESCRIPTION	
2-1	Description	2-1
2-3	Microprocessor	2-1
2-4	Display	2-1
2-5	System Warnings	2-1
2-6	Functions	2-1
2-7	AM, FM, CW, DSB Signal Generation	2-2
2-8	Simultaneous Modulation	2-2
2-9	Modulation Display	2-2
2-10	Sweep Generation	2-2
2-11	SINAD Metering	2-2
2-12	Multi-Mode Code Synthesizer	2-2
2-13	Off-The-Air Monitor	2-2
2-14	IF Display	2-2
2-15	Spectrum Analyzer	2-3
2-16	RF Burnout Protection	2-3
2-17	Terminated RF Power Measurement	2-3
2-18	In-Line Power Measurement	2-3
2-19	Duplex Generator	2-3
2-20	500-kHz Oscilloscope	2-3
2-21	Frequency Counter	2-4
2-22	AC/DC Voltmeter	2-4
2-23	Power Supply	2-4
	SECTION 3 — INSTALLATION	
3-1	Packing Information	3-1
3-4	Initial Setup	3-1
3-5	Analyzer	3-1
3-6	Battery Pack	3-2
3-7	Blower Assembly	3-2
	SECTION 4 — OPERATION	
4-1	General	4-1
4-3	Controls, Indicators, and Connectors	4-1
4-5	Operation	4-12
4-7	Calibrate	4-12

TABLE OF CONTENTS (CONT)

Paragraph Page

SECTION 4 — OPERATION (CONT)

4-8 Generator Operation 4-13
4-9 Duplex Generation 4-14
4-10 Frequency Counter 4-15
4-11 Spectrum Analyzer 4-15
4-12 Monitor 4-16
4-13 Ext Wattmeter 4-17
4-14 Simultaneous Generate and Measurement Operations 4-17

SECTION 5 — MAINTENANCE

5-1 Service 5-1
5-6 Replacement Parts Ordering 5-1
5-9 Addresses 5-1
5-10 General Offices 5-1
5-11 U. S. Orders 5-2
5-12 Canadian Motorola Electronics Company 5-2
5-13 All Countries Except U. S. and Canada 5-2
5-14 Major Assemblies 5-4
5-16 Theory of Operation 5-7
5-17 General 5-7
5-20 System Control 5-7
5-25 Generate Mode 5-7
5-34 Power Meter 5-13
5-40 Monitor Mode 5-14
5-52 Duplex Generator 5-16
5-56 Code Synthesizer 5-17
5-65 Frequency Counter 5-19
5-71 Digital Voltmeter (DVM) 5-19
5-84 Oscilloscope 5-21
5-96 Sinad Meter 5-23
5-99 Alignment Procedure 5-24
5-100 Introduction 5-24
5-102 Test Equipment Required 5-24
5-104 Preparation for Alignment 5-25
5-105 Basic Alignment Procedure 5-25
5-118 Extended Alignment Procedure 5-30
5-126 Checkout Procedure 5-34
5-127 Introduction 5-34
5-129 Test Equipment Required 5-34
5-131 Procedure 5-35
5-146 System Troubleshooting 5-39

SECTION 6 — SYSTEM INTERCONNECT AND PARTS LISTS

TABLE OF CONTENTS (CONT)

Paragraph | Page

SECTION 7 — LOW VOLTAGE POWER SUPPLY (A1)

7-1 General 7-1
7-2 Input Power Control 7-1
7-6 DC Output Control 7-1
7-9 Protection Circuitry 7-1
7-13 High Voltage Supply Control 7-2
7-14 Switcher Module A1A1 7-2
7-17 Output Module A1A2 7-2
7-21 Control Module A1A3 7-3
7-24 Relay Module A1A4 7-4

SECTION 8 — SCOPE AMPLIFIER (A2)

8-1 General 8-1
8-2 Deflection Amplifiers 8-1
8-3 Horizontal Timebase Generator 8-1
8-5 Horizontal Switching 8-1
8-6 Intensity Control 8-1
8-8 Focus Control 8-1
8-9 Astigmatism, Geometry, and Trace Rotation 8-1

SECTION 9 — SCOPE/DVM CONTROL MODULE (A3)

9-1 General 9-1
9-4 Scope Vertical Control 9-1
9-7 SSB Detection 9-1
9-8 455 kHz PLL 9-2
9-9 Scope Horizontal Control 9-2
9-11 Synthesizer Sweep Control 9-2
9-12 Scope Z-Axis Control 9-2
9-13 Modulation Display Control 9-2
9-17 Peak Detector 9-3
9-18 DVM Control 9-3
9-21 SINAD Detection 9-4
9-22 Module Control 9-4

SECTION 10 — RECEIVER (A4)

10-1 General 10-1
10-2 Down Converter 10-1
10-4 Linear IF Amplifier and Detectors 10-1
10-8 Audio Switching and Filtering 10-1
10-10 Logarithmic Amplifier and Detector 10-2
10-11 Alarm Generator and Audio Amplifier 10-2
10-12 Module Control 10-2

TABLE OF CONTENTS (CONT)

Paragraph | Page

SECTION 11 — RF SYNTHESIZER (A5)

11-1 General 11-1
11-2 Frequency Synthesis Scheme 11-1
11-5 310-440 MHz Phase Locked Loop 11-1
11-6 60.5 MHz Phase Locked Loop 11-1
11-7 550 MHz Phase Locked Loop 11-1
11-9 500-1000 MHz Phase Locked Loop 11-2
11-10 Modulation Control 11-2
11-11 Module Control 11-2

SECTION 12 — AUDIO SYNTHESIZER (A6)

12-1 General 12-1
12-2 Private Line Generator 12-1
12-7 DPL Generator 12-1
12-10 1 kHz Tone 12-2
12-11 External Modulation 12-2
12-12 Modulation Control 12-2
12-14 Module Control 12-2

SECTION 13 — PROCESSOR I/O MODULE (A7)

13-1 General 13-1
13-2 10.245 MHz Phase Locked Loop 13-1
13-3 System Control Bus Interface 13-1
13-6 DVM 13-1
13-8 Frequency Counter 13-1

SECTION 14 — IEEE INTERFACE MODULE (A8)

14-1 General 14-1
14.2 IEEE Bus Interface 14-1
14-3 RF Level Control 14-1
14-5 Modulation Control 14-1
14-6 Address Decode and Control Latches 14-1

SECTION 15 — PROCESSOR MODULE (A9)

15-1 General 15-1
15-2 Processor and Buffer 15-1
15-3 Program Memory (ROM) 15-1
15-4 Nonvolatile Memory (NVM) 15-1
15-5 Random Access Memory (RAM) 15-1
15-6 Peripheral Interface Adapter (PIA) 15-1
15-7 Timing Generator 15-1
15-8 Character Generator 15-1

TABLE OF CONTENTS (CONT)

Paragraph | Page

SECTION 16 — HIGH VOLTAGE POWER SUPPLY (A10)

16-1 General 16-1
16-2 High Voltage Supply 16-1

SECTION 17 — RF INPUT MODULE (A11)

17-1 General 17-1
17-2 Input Protection and Power Meter 17-1
17-4 Wideband Amplifier and Frequency Converter 17-1
17-9 Duplex Generator 17-2

SECTION 18 — FRONT PANEL INTERFACE MODULE

18-1 General 18-1
18-2 Input Coupling and Ranging 18-1
18-4 DVM Buffer 18-1
18-5 Frequency Counter Preamp 18-1
18-6 Scope Vertical Preamp 18-1
18-7 Scope Horizontal Preamp 18-1
18-8 Control and Display Interface 18-1

SECTION 19 — 10 MHz FREQUENCY STANDARD MODULE (A13)

19-1 General 19-1

SECTION 20 — FRONT PANEL (A14)

20-1 General 20-1
20-2 Display Board 20-1

SECTION 21 — IEEE - 488 BUS CONTROL

21-1 Introduction 21-1
21-7 IEEE-488 Bus Structure 21-3
21-9 Bus Signals 21-3
21-10 Data Transfer 21-3
21-12 Programming 21-3
21-15 Command Structure 21-4
21-24 Command Strings 21-7
21-25 Command Types 21-7
21-29 Trigger Command 21-7
21-30 Return Data 21-7
21-35 Programming Commands 21-8
21-36 Terminal Mode 21-8
21-42 Error Messages 21-8
21-45 Service Requests 21-10
21-46 Programming Considerations 21-11
21-53 General 21-12
21-54 R2002A Analyzer Configuration 21-12

SECTION 22 — BATTERY ASSEMBLY

LIST OF ILLUSTRATIONS

Figure		Page
1-1	Communications System Analyzer	1-0
2-1	Accessories Supplied with Analyzer	2-4
3-1	Typical Communication System Analyzer Packaging	3-1
4-1	Controls, Indicators, and Connectors, Front Panel	4-2
4-2	Controls, Indicators, and Connectors, Left Side Panel	4-3
4-3	Controls, Indicators, and Connectors, Rear Panel	4-3
4-4	System Analyzer Time Base Calibrate Test Setup and CRT Display	4-13
4-5	Duplex Generation Test Setup and CRT Display	4-14
4-6	Spectrum Test Setup and CRT Display	4-16
4-7	Wattmeter Test Setup and CRT Display	4-17
4-8	Test Setup for FM Receiver Sensitivity Using Generator and SINAD Meter with CRT Display	4-18
4-9	Test Setup for Pager and Alert Functions with CRT Display	4-19
4-10	Test Setup for Using DVM and Signal Generate with CRT Display	4-20
5-1	Communication System Analyzer, Top View Cover Removed	5-6
5-2	Communication System Analyzer, Bottom View Cover Removed	5-6
5-3	Communication System Analyzer Block Diagram	5-9
5-4	Generate Mode Block Diagram	5-12
5-5	Power Meter Block Diagram	5-14
5-6	Monitor Mode Block Diagram	5-15
5-7	Duplex Generator Block Diagram	5-17
5-8	Code Synthesizer Block Diagram	5-18
5-9	Frequency Counter Block Diagram	5-19
5-10	Digital Voltmeter (DVM) Block Diagram	5-20
5-11	Oscilloscope Block Diagram	5-22
5-12	Sinad Meter Block Diagram	5-24
5-13	Scope Amplifier Alignment Points	5-25
5-14	Front Panel Interface Alignment Points	5-28
5-15	Scope/DVM Control Alignment Points	5-29
5-16	Horizontal Time Base Alignment Points	5-29
5-17	DVM Input Buffer Alignment Points	5-30
5-18	Scope/DVM Control Test Point Numbering	5-30
5-19	Processor I/O A/D Alignment Points	5-31
5-20	Scope/DVM Control Char Sweep and Sinad Alignment Points	5-32

LIST OF TABLES

Table		Page
1-1	Physical Characteristics	1-1
1-2	Electrical Characteristics	1-1
1-3	Input/Output Characteristics	1-5
2-1	Accessories Supplied with the Communication Systems Analyzer	2-5
2-2	Optional Equipment for Use with Analyzer	2-5
4-1	Controls, Indicators, and Connectors	4-1
5-1	List of Subassemblies	5-4
5-2	Control Buses and Functions	5-11
5-3	Basic Test Equipment Required	5-24
5-4	Extended Test Equipment Required	5-25
5-5	Test Equipment	5-34
5-6	System Troubleshooting	5-39
5-7	Test Point Identification	5-44
7-1	Control Logic Functions	7-3
9-1	Internal DVM Inputs	9-3
21-1	IEEE-488 Interface Controllable Functions	22-2
21-2	Command Categories	22-4
21-3	Programming Commands	22-5
21-4	Terminal Mode ASC II Characters Printable Characters	22-9
21-5	Error Messages	22-10
21-6	SRQ Data	22-10
21-7	Code Synthesizer Programming Considerations	22-11

FOREWORD

1. SCOPE OF MANUAL

This manual contains information for the installation, operation, and maintenance of the Communications System Analyzer.

2. PURPOSE AND USE

The Motorola Communications System Analyzer is a portable test instrument, designed specifically for the service and monitoring of communications equipment. Its functions supersede those of a Service Monitor, expanding the features and capabilities to the point wherein servicing is achieved with a single instrument, rather than a host of separate equipment.

The R2001B is the standard Communications System Analyzer. The R2002B Analyzer, which contains the IEEE-488 Standard interface control bus, is also available. Programming for the R2002B is covered in Secton 21 of this manual.

The Analyzer improves a technician's efficiency and accuracy and reduces servicing time.

The Communications System Analyzer performs the functions of signal generation, signal monitoring, and the tests normally associated with the devices listed below.

- Spectrum Analyzer
- Duplex Generator
- Modulation Oscilloscope
- Frequency Counter
- AC/DC Digital Voltmeter
- RF Wattmeter
- General Purpose Oscilloscope
- Multi-Mode Code Synthesizer
- SINAD Meter
- Sweep Generator

The Analyzer meets the shock and vibration requirements of EIA test RS152B, the same specifications met by Motorola mobile radios. This minimizes failures when the instrument is used in a mobile service van, and means it is as tough as the radios it services.

The Communications System Analyzer is designed to be serviced quickly and easily, should a breakdown occur. The majority of the circuitry is on seven modular plug-in circuit boards which have built-in test points that aid in isolating the problem to a specific board. Simple plug-in replacement gets the instrument back in service.

CAUTION

This equipment contains parts that are subject to damage by static electricity. Proper precautions should be taken during handling.

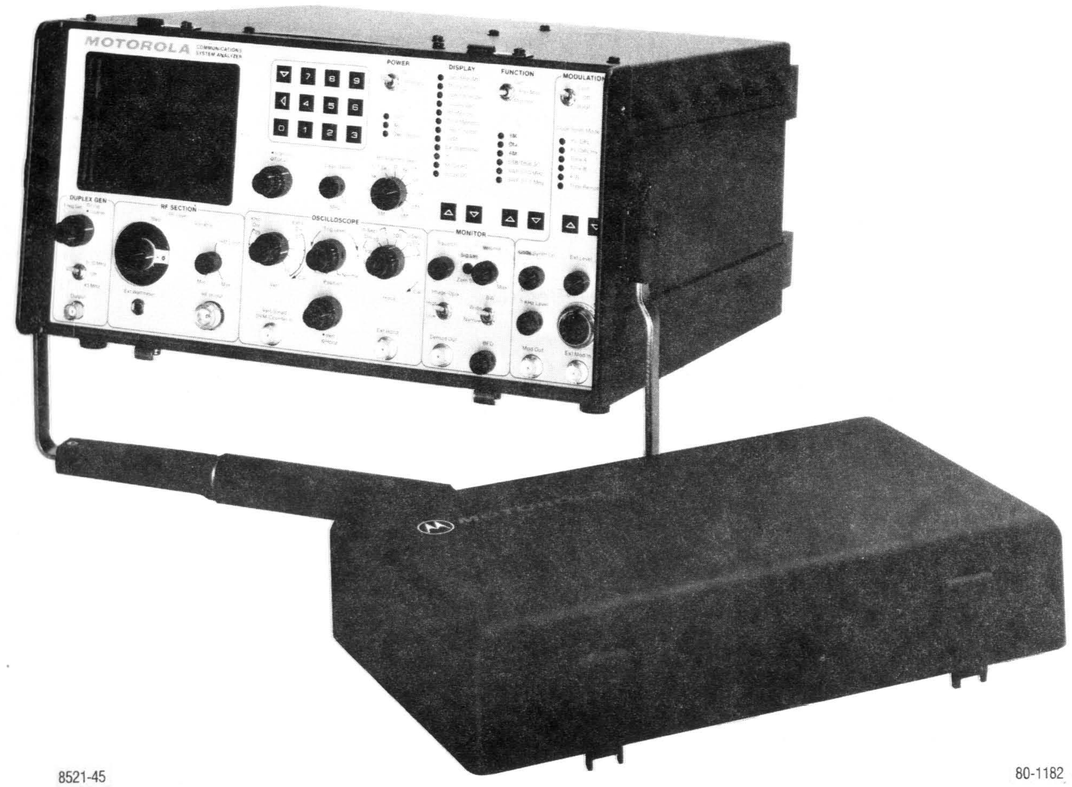

8521-45

80-1182

Figure 1-1. Communications System Analyzer

SECTION 1

1-1. INTRODUCTION

1-2. This section lists the physical, electrical, and input/output characteristics of the Communications System Analyzer shown in figure 1-1.

Table 1-1. Physical Characteristics

Characteristic	Description
Length	20.75 inches (52.7 cm)
Width	15.75 inches (40.0 cm)
Height	8.25 inches (21.0 cm)
Weight	48 pounds (21.9 kg) (Excluding Battery Pack)

Table 1-2. Electrical Characteristics

Characteristic	Description
Signal Generator Mode	
Frequency	
Range	10 kHz to 999.9999 MHz
Resolution	100 Hz
Accuracy	Equal to master oscillator time base
Output (into 50 ohms)	
Attenuator:	16 dB variable plus 10 dB steps over 13 ranges
Range:	0.1 μV to 1 Vrms (-127 dBm to +13 dBm)
Accuracy:	±2 dB accuracy on 0 dB step attenuator range ±2 dB across other step attenuator ranges ±1 dB over temperature range
Spectral purity	
Spurious:	$\leqslant$ -40 dB
Harmonics:	$\leqslant$ -15 dB
Frequency modulation	
Range:	0 - 50 kHz peak
Accuracy:	±5% of full scale
FM residual noise:	100 Hz
External/internal frequency range:	5 Hz - 10 kHz (±1 dB)
External input:	Approximately 150 mV for 20 kHz deviation
Modes:	Internal, external, microphone or all simultaneously

Table 1-2. Electrical Characteristics (Continued)

Characteristic	Description
Amplitude modulation	
Range:	0 to 80% from 1 to 500 MHz
Accuracy:	±10% of full scale from 0% to 50% AM
External/internal frequency range:	5 Hz - 10 kHz (±1 dB)
External input:	Approximately 150 mV for 80%, BNC connector
Modes:	Internal, external, microphone or all simultaneously
Double sideband suppressed carrier	
Carrier suppression:	$\geqslant$ 25 dB (1 MHz - 500 MHz)
Monitor Mode	
Frequency	
Range:	1 MHz to 999.9999 MHz
Resolution:	100 Hz
Accuracy:	Equal to that of master oscillator time base
Frequency error indicator	Autoranging CRT display. ±10 Hz resolution for frequency error measurements on 1.5 kHz, 5 kHz and 15 kHz full scale ranges. ±1 Hz resolution on the 50 Hz full scale range.
Input sensitivity	1.5 μV for 10 dB EIA Sinad (narrow band ±6 kHz mod. acceptance) 7 μV for 10 dB EIA Sinad (wide band ±100 kHz mod. acceptance) 4 MHz to 1000 MHz. Useable to 1 MHz.
Spurious response	-40 dB typical 0 dB image at ±21.4 MHz -10 dB at L.O. harmonics ±10.7 MHz
Deviation Measurement	
Range:	1, 10, 100 kHz full scale
Accuracy:	±5% of reading ±100 Hz from 500 Hz to 50 kHz deviation; ±10% of reading from 50 kHz to 75 kHz deviation
Peak deviation limit alarm:	Set via keyboard to 100 Hz resolution (0 kHz to 99.9 kHz). Audible alarm indicates limit condition in all Monitor Modes.
AM modulation measurement	
Range:	0 to 100%
Accuracy:	±5% of full scale

Table 1-2. Electrical Characteristics (Continued)

Characteristic	Description
RF Wattmeter (Autoranging display)	
Frequency range:	1 MHz to 1000 MHz
Power range:	1.0 watts to 125 wattts
Accuracy:	±10%, 1 watt to 125 watts
Protection	Over temp indicator
General Spectrum Analyzer	
Dynamic range	⩾75 dB displayed, - 105 dBm to +30 dBm input range with step attenuator
Frequency	
Range	4 MHz to 1,000 MHz
Full scale frequency dispersion:	Adjustable between 1 MHz and 10 MHz
Duplex Generator	
Frequency offset	Adjustable from 0 to 10 MHz plus fixed offset of 45 MHz (high or low side)
Modulation level (FM only)	Adjustable from 0 to 20 kHz peak deviation
Oscilloscope	
Size	8 cm x 10 cm
Frequency response	DC to 0.5 MHz (3 dB point)
External vertical input range	10 mV, 100 mV, 1V, 10V (per division)
Sweep rates	1 μs, 10 μs, 0.1 ms, 1 ms, 0.01S, 0.1S (per division)
Sync	Automatic or normal triggering
Frequency Counter	
Frequency range	10 Hz to 35 MHz
Readout	5 digit, autoranging
Input sensitivity	30 mV from 10 Hz to 1 MHz 50 mV from 1 MHz to 35 MHz

Table 1-2. Electrical Characteristics (Continued)

Characteristic	Description
Digital Voltmeter	
Readout	Auto ranging digital display, 1, 10, 100, 300 volts full scale. AC-dBm calibrated across 600 ohms.
DC accuracy	±1% of full scale ±1 least significant digit
AC accuracy	±5% of full scale
AC bandwidth	50 Hz to 10 kHz
Modulation Source	
Code Synthesizer	
Frequency range	5 Hz to 9.9999 kHz sinewave
Resolution	0.1 Hz
Frequency accuracy	±0.01%
Distortion	⩽1%
Signaling sequences	Four fixed 1. Tone only 2. Tone with battery saver 3. Tone and voice 4. Group call Four user programmable
Tone remote access	Remote base access sequence as follows Tone A for 150 msec Tone B for 40 msec 10 dB below Tone A Tone A continuously 30 dB below the first Tone A burst
Digital private line (DPL)	Codes 000 to 777 and inverted
Fixed 1 kHz	
Accuracy	Equal to master time base
Distortion	⩽1%
External input	
Microphone	Standard RTM 4000A microphone interface with IDC.
External Jack	
Frequency range	5 Hz to 10 kHz
Level	7 vrms maximum
Impedance	10 Kohm nominal
Code synthesizer external output level	0-3 vrms into a 600 ohm load
SINAD Meter	
Input level range	0.5V to 10 Vrms
Sinad accuracy	±1 dB at 12 dB Sinad

Table 1-2. Electrical Characteristics (Continued)

Characteristic	Description
Manual Frequency Scan	
Step size	Switch Selectable: 100 Hz, 1 kHz, 10 kHz, 100 kHz and 1 MHz (+ or -)
Step rate	5 steps/sec.
Time Base	
Standard TCXO	Aging: $\pm 1 \times 10^{-6}$ per year Temp: $\pm 1 \times 10^{-6}$ maximum error over the 0° to 55°C temp. range
Optional ovenized high stability	Aging: $\pm 1 \times 10^{-6}$ per year Temp: $\pm 5 \times 10^{-8}$ maximum error over the 0° to 55°C temp range (warmup to $\pm 5 \times 10^{-7}$ of final frequency within 20 minutes)
Power and Environmental	
AC	100-130 VAC, 200-260 VAC 47-63 Hz
DC	+11.5 VDC to +16 VDC
Optional battery	13.6V battery - provides 1 hour continuous operation
Temperature range	0° to 55°C operating; -40 to 85°C storage

Table 1-3. Input/Output Characteristics

Characteristic	Description
Input	
Ext mod in	10K ohms nominal, 150 mV typical for 20 kHz dev. FM or 80% AM
Mic.	Mic input provides bias and IDC limiting suitable for Motorola RTM 9000A handset. PTT switches R2001 from monitor to generate.
Ext Horiz	1 volt minimum for full screen deflection. Maximum input 10 volts.
Vert/Sinad/DVM/Counter In	1 Meg ohm, 40 pf Nominal; ±300 volts DC max, 300 Vrms max at frequencies below 500 Hz, 10 Vrms max up to 35 MHz • Scope vert in: DC to 500 kHz or 50 Hz to 500 kHz AC mode (±3 dB) • Sinad in: 0.5 to 10 Vrms in at 1 kHz

Table 1-3. Input/Output Characteristics (Cont)

Characteristics	Description
RF In/Out	• DVM in: 1, 10, 100 and 300V full scale AC or DC. AC bandwidth 50 Hz to 10 kHz for ±5% F.S. accuracy (AC dBm calibrated across 600 ohms) • Frequency counter in: 30 mV or greater required from 10 Hz to 1 MHz. 50 mV or greater required from 1 MHz to 35 MHz 50 ohms nominal, 125 watts max (1-1000 MHz) **CAUTION:** The RF In/Out Jack is protected against RF overload. However, to prevent undue stress on the protected circuits it is advisable to always switch the system to the power monitor mode before applying power in excess of 200 mW. Additional protection is also obtained by making it a practice not to leave the step attenuator in the 0 dB position.
Ext Wattmeter	Characteristics suitable for Motorola ST-1200 series Wattmeter Elements
10 MHz std in (rear panel)	70 to 350 mV rms input required at 10 MHz, impedance greater than 50 ohms.
Output	
Mod out	Up to 11 vpp into 600 ohms 10 Hz to 10 kHz
Demod out	Typically 3 vpp into 600 ohms for ±5 kHz deviation narrowband, 4 vpp for ±75 kHz deviation wideband. DC to 10 kHz response
RF in/out	1.0 Vrms (+13 dBm) to 0.1 Vrms (-127 dBm) 50 ohm nominal source impedance. 10 kHz to 1.0 GHz.
Duplex gen out	-30 dBm typical, 50 ohm nominal source impedance 2 MHz to 1 GHz
10 MHz std out (rear panel)	250 mV rms nominal output into 50 ohms

SECTION 2

DESCRIPTION

2-1. DESCRIPTION

2-2. The Communication System Analyzer is a portable test instrument designed for servicing and monitoring of portable, mobile, and land base communications equipment operating over the frequency range of 1 MHz to 1 GHz. The unit performs the functions of signal generation, frequency error and modulation measurement. It is also capable of a variety of tests normally associated with the following devices:

Spectrum analyzer
Duplex offset generator
Modulation oscilloscope
Frequency counter
AC/DC digital-analog voltmeter
RF wattmeter
General purpose oscilloscope
Multi-mode code synthesizer
SINAD meter
Sweep generator

2-3. MICROPROCESSOR. A Motorola M-6800 series microprocessor permits keyboard entry of data, autoranging of displays, fast frequency access, and permanent storage of often-used frequencies and codes. Generate and monitor RF frequencies, tone codes, and timing sequences can be programmed into a nonvolatile memory, saving time and eliminating entry errors. When one particular type of equipment is continuously serviced, the unit can be programmed to select the mode of operation required when first turned on.

2.4 DISPLAY. All functions, generated or monitored, are presented on an 8 cm x 10 cm cathode ray tube (CRT) in both analog and digital format, with the name of the function being displayed. The CRT also displays control settings eliminating the need for operator search of different equipment panels. Digital readouts are visually aided by the use of the continuously autoranging analog line segments, which are similar to a bar graph. Each has a base line and calibration markers, in addition to the intensified segment showing the measurement. The user selectable displays are listed in a column beneath the DISPLAY heading on the front panel. Choosing a display is accomplished by pressing an arrow button below the column, for up or down movement, as required. When the appropriate arrow is pressed, the LED adjacent to the selected display illuminates. FUNCTION is selected in the same way, providing rapid, accurate changes in service capability at the touch of a button.

2-5. SYSTEM WARNINGS. To aid the technician in servicing, visual warnings will appear on the CRT when certain overload or caution conditions exist. Displays warn of low battery power, overheating of the RF load, or an improper attenuator setting for particular measurements. In addition, a continuous audible alarm sounds when a preset deviation limit is exceeded in monitor modes. This limit is entered by using the keyboard and may be programmed from 0 kHz to 99.9 kHz, with 100 Hz resolution.

2-6. FUNCTIONS. The following paragraphs briefly describe the major functions of the Communications System Analyzer.

2-7. AM, FM, CW, DSB Signal Generation. The built-in general purpose signal generator provides continuous coverage of the HF, VHF, and UHF land mobile spectrum for receiver testing. Many forms of external and internal modulation can be simultaneously impressed on the carrier signal for actual composite signals. The frequency range of the RF signal generator is from 10 kHz to 1000 MHz in 100 Hz steps. The output of up to 1 Volt rms provides sufficient amplitude to get through misaligned tuners and receivers, and is especially effective when changing a receiver's frequency. The high level, clean output is available over the entire frequency range of the Communications System Analyzer. The output frequency is referenced to an internal time base which can be calibrated to the WWV Standard. (See paragraph 4-7.)

2-8. Simultaneous Modulation. Modulation is simultaneously available from an internal 1 kHz tone generator, a multi-mode code synthesizer, and from external inputs. The external modulation can be voice from a standard Motorola mobile radio microphone (which plugs into the front panel of the instrument), as well as a signal applied to the external BNC input. Separate controls are provided for independently setting the levels of the 1 kHz tone, the code synthesizer, and the external modulation sources. The 1 kHz test tone is a convenient source of modulation for making SINAD measurements. A MOD OUT connector provides external access to all of the modulation signals.

2-9. Modulation Display. The recovered audio waveform, or audio used to modulate the generator carrier, can be viewed on the CRT. It is used to graphically measure deviation, and to aid in waveform analysis.

2-10. Sweep Generation. The sweep generator mode provides an RF output that is swept in frequency across a band centered at the programmed frequency. A synchronized horizontal sweep for the internal oscilloscope allows filter characteristics to be easily determined. This is ideal for in-depth troubleshooting of IF amplifiers and filters.

2-11. SINAD Metering. A comprehensive check of receiver performance can be made with a SINAD measurement. The analog line segment and digital representation of SINAD appear automatically whenever the unit is in the normal generate mode. The only hookups required are from the Communications System Analyzer to the RF input of the receiver under test, and from the audio output of the receiver to the instrument's multipurpose input. The measurement, and appropriate servicing, can then be accomplished without the need for a separate signal generator, SINAD meter or distortion analyzer.

2-12. Multi-Mode Code Synthesizer. The Communications System Analyzer generates Private Line tones (PL), Digital Private Line codes (DPL), two-tone sequential paging codes and tone-remote base signaling tones. All codes are available at the Mod Out jack, as well as being used internally to modulate the RF signal generator. This eliminates the necessity of using separate generators and oscillators for general servicing, setting transmitter deviation, or for checking tone-remote-base control lines. Timing sequences are also stored in the Tone Memory to provide fast set-up and eliminate errors. User programmable timing sequences are also provided to allow the storage of non-standard or future time sequences.

2-13. Off-the-Air Monitor. The 1.5 μV sensitivity of the Communications System Analyzer receiver allows off-the-air monitoring and measurement of transmitter frequency error and deviation to 1000 MHz. A variable squelch allows weak signals to be monitored, but can be set higher to ensure the proper signal-to-noise ratio for measurement accuracy. The off-the-air monitor function enables frequent parameter checks without leaving the shop, thus spotting system degradation early and keeping service costs down. Bandwidth can be set Wide for off-channel signal location or wide band FM; or Narrow for maximum sensitivity and selectivity.

2-14. IF Display. When the IF display mode is selected, the Communications System Analyzer's receiver IF envelope is shown on the CRT. This allows the technician to qualitatively and quantitatively assess the amplitude modulation envelope of a transmitter.

2-15. Spectrum Analyzer. In this mode of operation the CRT displays a window of the RF spectrum whose bandwidth (from 1 MHz to 10 MHz) is determined by the DISPERSION/SWEEP control. The center frequency of this window ranges from 4 MHz to 1,000 MHz, selectable by entering a specific center frequency with the keyboard. This center frequency is digitally displayed at the top of the CRT screen, eliminating the need for an external signal generator, and counter to provide markers. Once a signal is centered on the screen, positive identification is aided by switching the Analyzer to MONITOR AM or FM and listening to the demodulated output via the built-in audio amplifier and speaker. The spectrum analyzer's center frequency can be scanned up or down at rates varying from 0.5 kHz per second to 5 MHz per second, using the RF scan control. Slow rates are used to precisely determine a subject signal's frequency while faster rates are used for locating intermittent transmissions or viewing large areas of the spectrum in a short time. Uses of the Spectrum Analyzer are: Intermodulation interference identification, IF and RF signal tracing, transmitter harmonics measurements, transmitter spurious checks, and receiver local oscillator radiation.

2-16. RF Burnout Protection. At RF input levels above 200 mW, in any operating mode, the input automatically switches to the internal 125 watt RF load, thus protecting the attenuator and signal generator against damage from a keyed transmitter. If power above 200 mW is applied in any mode except the power monitor mode an audiable alarm sounds and a visual warning on the CRT directs the operator to switch to the power monitor mode.

CAUTION

To prevent undue stress on the protected circuits it is advisable to always switch the system to the power monitor mode before applying power in excess of 200 mW. Additional protection is also obtained by making it a practice not to leave the step attenuator in the 0 dB position.

2-17. Terminated RF Power Measurement. RF power is automatically measured when the Communications System Analyzer is in the Power-Monitor mode. The built-in RF load dissipates up to 50 watts for three minutes and up to 125 watts for one minute. If a high power transmitter should be keyed into the unit for a time long enough to threaten overheating of the power measuring circuitry, the audible alarm sounds and the CRT display changes to read "RF LOAD OVER-TEMP," thus warning the technician to un-key. This instrument function is further enhanced by the simultaneous indication of RF power output, carrier frequency error, and modulation, all on the same CRT display.

2-18. In-Line Power Measurement. Use of the Motorola ST-1200 series Wattmeter elements in conjunction with the analyzer's external wattmeter display provides measurement of forward and reflected antenna power on the CRT display. This capability eliminates the complex hook-ups and the additional instruments normally required for antenna measurements.

2-19. Duplex Generator. In this mode, the Communications System Analyzer simultaneously receives and generates the signals for duplex radio servicing, while generated and monitored frequencies are observed on the CRT. In the 0-10 MHz range, the 'Freq. Set' control tunes the proper offset frequency for the VHF and UHF bands. The 45 MHz mode provides a single offset for the 800 MHz range. A switch is also provided to select high or low side offset, as required. The Duplex Generator provides enhanced capability to service equipment such as repeaters, car telephones and Emergency Medical Telemetry portables.

2-20. 500-kHz Oscilloscope. This general purpose scope is ideal for waveform analysis in two-way communication servicing. Use it for viewing modulation signals (either internally or externally generated), detection of asymmetric modulation or audio distortion, and general purpose signal tracing and troubleshooting.

2-21. Frequency Counter. The frequency counter measures inputs in a range from 10 Hz to 35 MHz. Its 5 digit auto-ranging output is displayed on the CRT and allows precise measurement and setting of offset oscillators, 35 kHz and 455 kHz pager IF's, PL frequencies and other external input signals. This function will also operate simultaneously with the generate or monitor receiver modes of operation. Frequency measurement of transmitted carriers and other signals higher than 35 MHz is easily accomplished with the frequency error readout in the monitor modes.

2-22. AC/DC Voltmeter. Switching to the DVM mode provides a digital-analog voltage presentation on the CRT, along with the corresponding dBm value. The auto-ranging display provides full scale deflections of 1, 10, 100 and 300 Volts. AC or DC measurement is selected on the CRT. The meter's wide dynamic range and three digit display are ideal for setting power supply voltages, checking bias levels, and setting audio levels. Like the Frequency Counter, the DVM will operate simultaneously with generate or monitor operation.

2-23. Power Supply. The Communications System Analyzer may be powered by a variety of sources:

- AC at 110 or 220 Volts, 50/60 Hz
- DC from an external 12 Volt source such as a service vehicle
- DC from an optional battery pack. Servicing can thus be accomplished wherever the equipment under test is located

2-24. ACCESSORIES.

2-25. Table 2-1 lists the accessories supplied with the Communication System Analyzer. Optional equipment available for use with the unit is listed in Table 2-2.

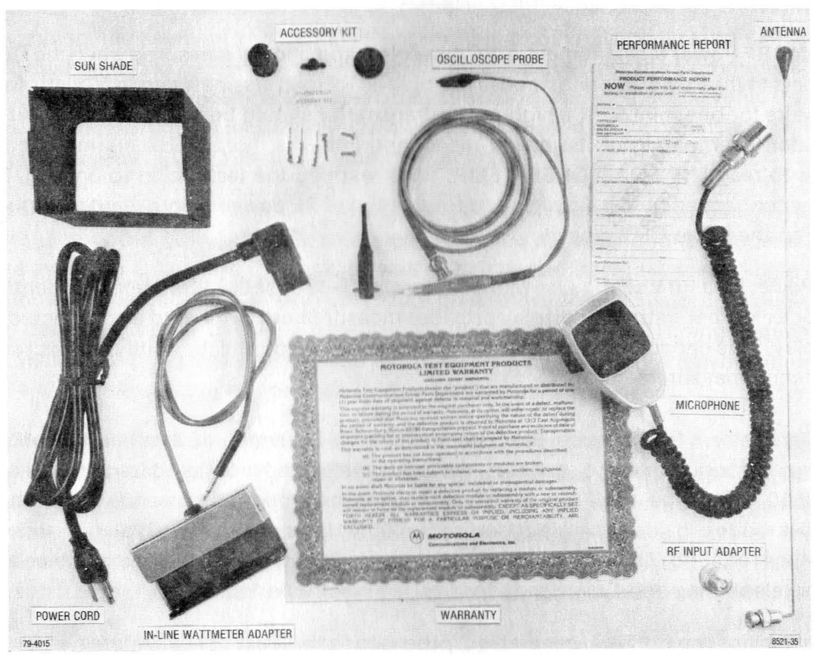

Figure 2-1. Accessories Supplied with Analyzer

Table 2-1. Accessories Supplied with the Communication Systems Analyzer

Equipment	Motorola Part No.	Use
Front cover	15-80335A70	Front panel and CRT protection, storage of cables, power cord, and other equipment for on-site servicing.
Sun shade	15-80335A55	Snap over CRT during use in bright sunlight.
Power cord	30-80336A36	Three conductor cord to supply AC power to unit. Also used when charging optional battery pack.
Oscilloscope probe	RTL-4058A	A X1 probe with attachments for general servicing.
In-line wattmeter adapter	RTL-4055A	Allows use of Motorola ST-1200 series in-line wattmeter elements for direct measurement and display of forward and reflected transmitted power.
Coax adapter	58-84300A98	Adapts front panel "N" connector to BNC female.
Antenna	TEKA-24A	Plugs into RF in/out connector on front panel with N to BNC adapter. Used for off-the-air transmitter and receiver tests.
Test microphone	RTM-4000A	Used for voice modulation of signals.
Connector kit	RPX-4097A	Consists of connector shell, clamp, and four connector pins. Used to fabricate a mating plug for male dc power connector at back of analyzer. Enables user to make a dc power cable to interconnect separate power source to analyzer. Pins 1 and 2 are positive, pin 3 is the charging line, pin 4 is ground.

Table 2-2. Optional Equipment for Use with Analyzer

Equipment	Motorola Part No.	Use
IEEE-488 Standard interface bus option	Consult factory for retrofit information.	Enables fully automatic testing with the unit by external control from a computer or programmable controller.

Table 2-2. Optional Equipment for Use with Analyzer (Cont)

Equipment	Motorola Part No.	Use
Battery pack	RTP-1002A	13.6 volt battery and charger attaches to back of the unit. Provides one hour of continuous operation. Cannot be used with IEEE-488 or Blower options.
High-stability oscillator module	RTL-1007A	Improves stability of the time base as specified in electrical characteristics section.
Protective cover	RTL-4056A	Padded fabric type cover to protect unit from excessive field wear.

SECTION 3

INSTALLATION

3-1. PACKING INFORMATION

3-2. The unit is packaged in a fiberboard carton and protected by foam pieces as shown in figure 3-1. The unit is first packed in a cardboard container and then this carton is packed in a second, larger cardboard container, for further protection. Save the packing container and materials for future use.

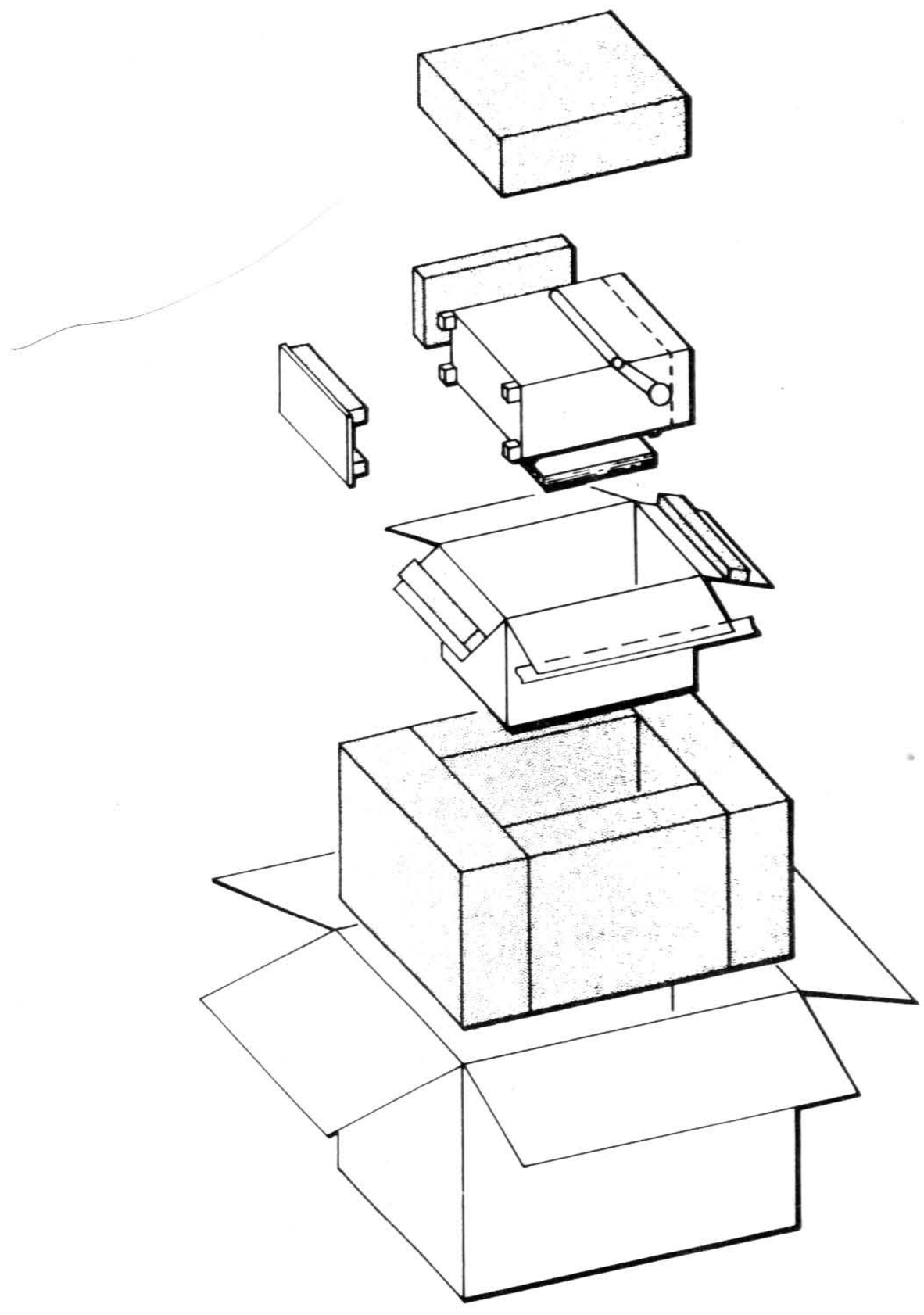

Figure 3-1. Typical Communication System Analyzer Packaging

3-3. All accessories supplied with the analyzer are packed in the analyzer cover.

3-4. INITIAL SETUP

3-5. ANALYZER. To set up the Analyzer for use, place the unit on workbench or in mobile repair unit. Remove the front cover by operating the two latches on the bottom of the cover. Lift the cover and slide it to the side to separate the hinges. Remove the power cord (AC or DC) that is stored in the cover. Attach the female connector of the power cord to the appropriate connector on the rear panel of the analyzer, and the other end to the power source. For AC power a grounded 3 wire power source of 100-130 Vac or 200-260 Vac, 47-63 Hz must be used.

NOTE

The unit is set for 110-130 Vac operation from the factory. For operation from 100-110 Vac or 200-260 Vac, the voltage selection card must be readjusted before connection to the power source. This is accomplished by the following procedure:

1. Remove the power cord from the rear panel connector.
2. Slide the selector card cover door over the connector area exposing the selection card and fuse area.
3. Pull outward on the fuse ejector tab and remove fuse.
4. Remove the printed circuit board voltage selector card by pulling straight to the rear.
5. Reinsert the card at the orientation which causes the appropriate voltage range (marked on card) to be displayed.
6. Reinstall the fuse.
7. Slide the cover plate back to the original position, connect power cord, and proceed with system operation.

Remove the accessories to be used from the cover. Move the POWER switch to the ON position. When the Oven Ready indicator illuminates the unit's frequency standard is stabilized and the unit is ready for use, (instantaneous with standard TCXO).

CAUTION

When installing the analyzer in a vehicle, the DC supply line should be fused close to the vehicle battery. The analyzer is protected against overload by the DC 8A fuse on the rear of the unit, but the vehicle is not protected.

3-6. BATTERY PACK. The battery pack is attached to the rear of the analyzer with two clips and two screws. Align and slide the mounting clips of the battery pack into the slots on the mounting brackets on the left side of the back panel of the analyzer. Align the captive screws with the mounting holes on the right of the panel and tighten. Connect the power plug to the connector at the top right of the rear panel.

SECTION 4

OPERATION

4-1. GENERAL

4-2. This section contains information for the operation of the Communication System Analyzer.

4-3. CONTROLS, INDICATORS, AND CONNECTORS

4-4. The analyzer controls, indicators, and connectors are shown in Figures 4-1 through 4-3 and listed with their functions in Table 4-1.

Table 4-1. Controls, Indicators, and Connectors

Item	Description	Function
	FRONT PANEL (fig. 4-1)	
Keyboard	Twelve-key pushbutton keyboard	Enters variables into memory/enters manual variables/selects variables to be used from the memory.
▽	Line cursor key	Moves the cursor down to the next line that may be changed. Preset permanent entries are skipped. Cursor will move down only. When on last line, will return to top line with next entry.
◁	Horizontal cursor key	Moves the horizontal cursor left to the next entry position that may be changed. When in the last left position, the cursor will move to the far right with the next entry.
0 through 9	Numerical keys	Used to select from the memory a stored value to be used, or to enter directly a value to be used.
• Intensity • Focus	Stacked concentric potentiometers	
	• Intensity - center (small) knob	Controls the intensity of the scope presentation.
	• Focus - outside (large) knob	Controls the focus of the scope presentation.
Dispr/Sweep control	Potentiometer	Controls the frequency span (1-10 MHz) displayed on the CRT when unit is used as a spectrum analyzer. Provides sweep width control when either sweep function (SWP 0.01-1 MHz or SWP 1-10 MHz) is selected.

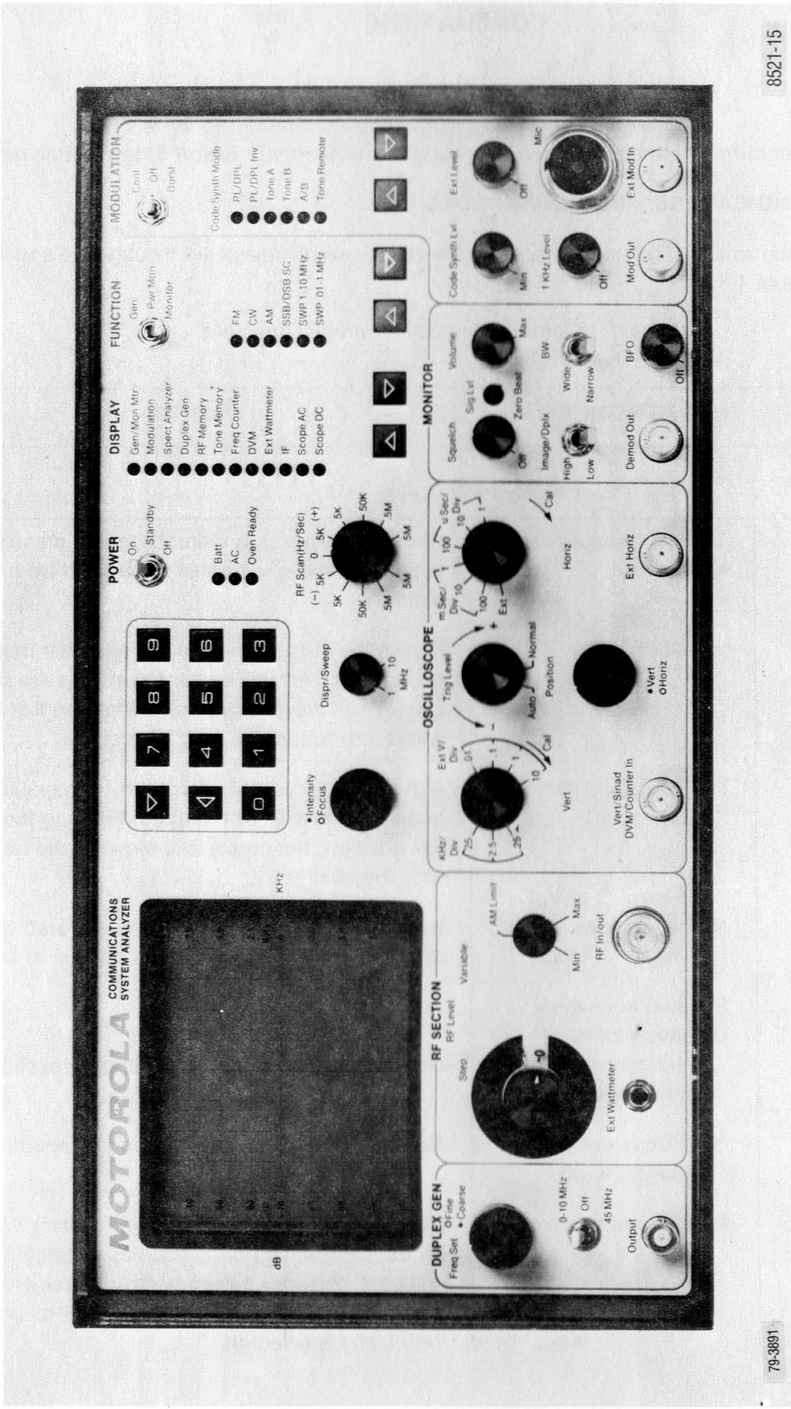

Figure 4-1. Controls, Indicators, and Connectors, Front Panel

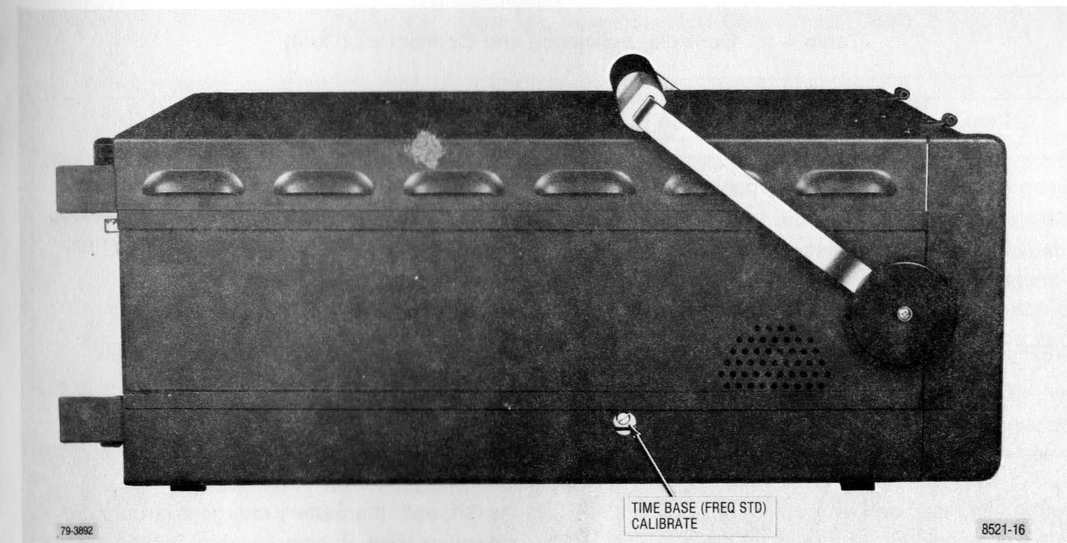

Figure 4-2. Controls, Indicators, and Connectors, Left Side Panel

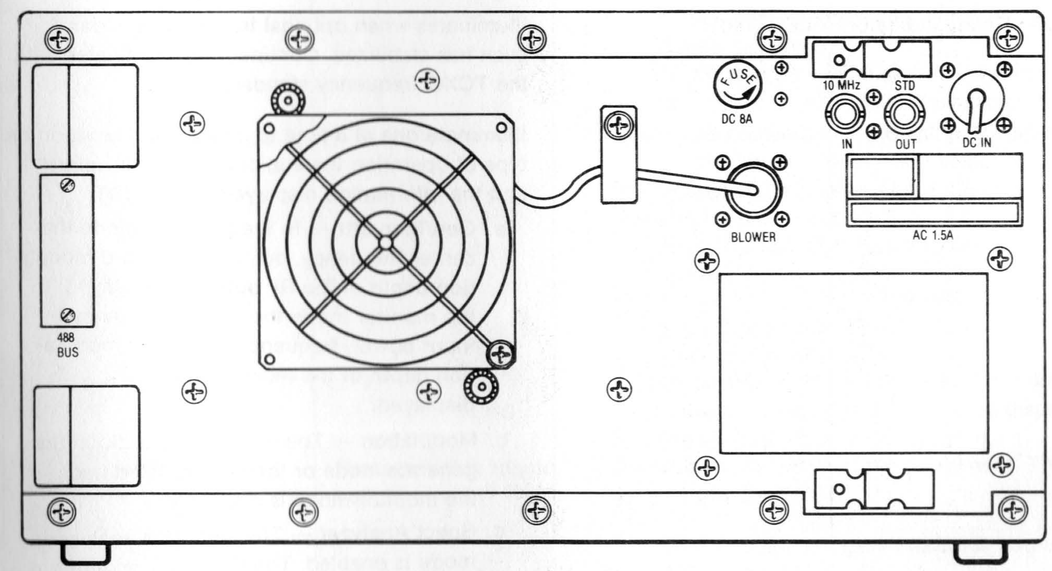

Figure 4-3. Controls, Indicators, and Connectors, Rear Panel

Table 4-1. Controls, Indicators, and Connectors (Cont)

Item	Description	Function
RF Scan (Hz/Sec) switch	Eleven position switch	Allows automatic scan of the generated or the monitored frequency. The switch setting indicates rate of frequency change. The rate is 5 steps per second, with frequency steps of 100 Hz, 1 kHz, 10 kHz, 100 kHz and 1 MHz.
POWER switch	Three-position toggle switch.	a. Energizes all circuitry in the On position. b. At Standby position, removes DC from all circuitry except the frequency standard and battery charger. c. At Off, only the battery charging circuitry is operative if an ac power source is being used.
Batt indicator	LED (red)	Illuminates when equipment is using DC power.
AC indicator	LED (red)	Illuminates when equipment is connected to an ac power source. Position of POWER switch has no effect on indicator. Equipment automatically switches to ac power source when connected to ac line voltage.
Oven Ready indicator	LED (red)	Illuminates when optional frequency standard oven has stabilized. Continuously illuminated with the TCXO frequency standard.
DISPLAY indicators	Twelve LEDs (red)	Illuminate one at a time to indicate the function or type of operation the equipment is performing and the information displayed on the CRT. a. Gen/Mon Mtr — In the generate mode the center frequency, output power, and modulation depth of the RF output is displayed. In the monitor mode the center frequency, input power, frequency error, and modulation depth of the received carrier is displayed. b. Modulation — The modulation audio in the generate mode or the demodulated audio in the monitor mode is displayed. c. Spect Analyzer — The spectrum analyzer mode is enabled. The RF spectrum and the operating center frequency is displayed.

Table 4-1. Controls, Indicators, and Connectors (Cont)

Item	Description	Function
		d. Duplex Gen — The duplex generate and monitor frequencies are displayed. The depth of modulation on the generator output or on the received carrier is indicated for the generate and monitor modes respectively. For this display, the function switch only selects which modulation reading is displayed. e. RF Memory — The nine stored RF frequencies or DPL codes with their corresponding PL and the current frequency in use are displayed. f. Tone Memory — The user selectable parameters for the code synthesizer are displayed. These include the tone A and B frequencies, the signaling sequence, and the programming for each of the eight sequences available. g. Freq Counter — The frequency of the signal input to the front panel frequency counter jack is displayed. h. DVM — The AC or DC level of the signal at the front panel DVM jack is displayed. The AC or DC mode is selected with the display cursor and the keyboard. The battery voltage is also displayed. i. Ext Wattmeter — The external wattmeter element selected and the forward and reflected power being passed thru that element are displayed. The element select is changed by entering the appropriate range number with the keyboard. j. IF — The 455 kHz IF signal from the monitor receiver is displayed. k. Scope AC — The voltage waveform applied to the front panel vertical input is displayed. The vertical input is AC coupled. l. Scope DC — The voltage waveform applied to the front panel vertical input is displayed. The vertical input is DC coupled.
FUNCTION switch	Three-position toggle switch	Controls the function of the equipment. The mode is shown by the LEDs. a. Gen - equipment generates and outputs an RF signal.

Table 4-1. Controls, Indicators, and Connectors (Cont)

Item	Description	Function
		b. Pwr Mon - equipment monitors input signals with the input terminated into the internal power meter. This position must be used for inputs of 0.2 watts and greater. c. Monitor - equipment monitors input signals with the input terminated into the receive mixer. This position is used for "off the air" monitoring.
FUNCTION indicators	Six LEDs (red)	Indicates the mode or type of signal the equipment is set up to monitor or generate: a. FM - equipment generates or monitors frequency modulated signals. b. CW - equipment generates an unmodulated RF signal. Monitor CW provides frequency error measurement only. c. AM - equipment generates or monitors amplitude modulated signals. d. SSB/DSBSC - equipment generates a double sideband suppressed carrier signal. NOTE: The level of the DSBSC signal generated is not calibrated, it is for use in relative measurements only. Monitor SSB mode receives SSB signals with the use of the BFO. e. SWP 1-10 MHz - equipment generates a swept RF signal having a sweep width of 1 to 10 MHz, controlled by the Dispr/Sweep control. Selection of Monitor Sweep has no effect, equipment remains in generate mode. f. SWP 0.01-1 MHz - equipment performs as in e. above except the sweep width limits are 0.01 MHz to 1 MHz.
MODULATION SWITCH	Three position toggle switch	Controls the Code Synthesizer modulation source. Code Synthesizer mode is shown by the LEDs. a. Cont - Continuous modulation signal output.

Table 4-1. Controls, Indicators, and Connectors (Cont)

Item	Description	Function
FRONT PANEL (fig. 4-1) (Cont)		
		b. Off - Turns off signal. When the mode is DPL or DPL Inv, returning the switch to Off from Cont produces a 133 Hz tone burst for a 120 ms duration. c. Burst - For PL, tone A, and tone B modes the output is present for as long as the switch is held in the burst position. For the A/B mode the burst position causes a single signaling sequence to be output. For the DPL and DPL Inv modes the Burst position causes a 133 Hz tone to be output. For the Tone Remote mode either the Burst or the Cont position causes a tone remote access sequence to be output. The access sequence leaves tone A at a low level for transmit-type commands until the switch is returned to the Off position. This switch is spring loaded to return to the Off position from the Burst position.
CODE SYNTH Mode indicators	Six LEDs (red)	When illuminated, indicates the selected mode of the Code Synthesizer. a. PL/DPL Indicator PL - Selected Private Line frequency output to 1 kHz DPL - Selected Digital Private Line code output Maximum code number is 777. b. PL/DPL Inv indicator PL - Same as above DPL - Inverted output of selected Digital Private Line code. Maximum code number is 777. The Private Line frequency or the Digital Private Line code is selected from the RF memory display or entered from the keyboard on the Gen Mon Mtr display. c. Tone A indicator Indicates Tone A selected for output d. Tone B indicator Indicates Tone B selected for output

Table 4-1. Controls, Indicators, and Connectors (Cont)

Item	Description	Function
		e. A/B indicator Indicates Tone A/Tone B signaling sequence will be output. See Tone Memory Table example, figure 4-9. f. Tone Remote indicator Indicates access sequence for Motorola Repeater will be output. Tone A and B frequencies are entered from the keyboard on the Tone Memory Display.
DISPLAY select switches	Two-pushbutton switches	Selects the function to be displayed by the equipment, as indicated by the DISPLAY LEDs. a. △ - moves the selection up one step at a time b. ▽ - moves the selection down one step at a time
FUNCTION select switches	Two-pushbutton switches	Selects the type or mode of signal the equipment will generate or monitor as indicated by the FUNCTION LEDs. Operation is the same as for the DISPLAY select switches.
Code Synth Mode select switches	Two-pushbutton switches	Selects the Code Synthesizer output mode as indicated by the CODE SYNTH MODE LEDs. Operation is the same as for the DISPLAY select switches.
Code Synth Lvl control	Potentiometer	Controls the level of Code Synthesizer for modulation or MOD Output.
Ext Level control	Potentiometer/switch	Controls modulation level of external input (microphone and other external generators). Switch at full counterclockwise position disables external modulation inputs.
Mic connector	4-pin connector	Microphone input. Provides microphone bias and PUSH TO TALK (GENERATE) connection to equipment.
Ext Mod In connector	BNC connector	External modulation signal input.
1 kHz Level control	Potentiometer/switch	Internal 1 kHz tone modulation level control. Switch at full counterclockwise position disables 1 kHz modulation tone.

Table 4-1. Controls, Indicators, and Connectors (Cont)

Item	Description	Function
Mod Out connector	BNC connector	Output connector for all modulation signals (all signals combined).
Volume control	Potentiometer	Controls speaker output level.
BW switch	Two-position switch	In either Pwr Mon or Monitor modes selects IF bandwidth. NB is ±6 kHz mod acceptance bandwidth. WB is ±100 kHz mod acceptance bandwidth. In Gen FM mode selects modulation range. 0-25 kHz dev in NB mode or 0-100 kHz dev in WB mode.
BFO control	Potentiometer/switch	BFO on/off and beat frequency control for sideband reception. Full Counterclockwise position is off. NOTE: To minimize interference the BFO should be turned off when not in use.
Sig Lvl/Zero Beat indicator	LED (red)	Flashes at a rate equal to the difference between the received carrier frequency and the programmed frequency. Also is used as a squelch indicator.
Squelch control	Potentiometer	Adjusts squelch threshold level, full counter-clockwise position disables squelch. NOTE: Monitor sensitivity is greatly decreased (for high-level use) as the control is increased clockwise beyond the quieting point.
Image/Dplx switch	Two-position switch	In duplex generation mode, controls the duplex frequency output for above (High) or below (Low) the receive programmed frequency. In the monitor mode it selects the frequency of the local oscillator injection above or below the programmed monitor frequency to remove image interference.
Demod Out connector	BNC connector	Receiver audio output.
Oscilloscope Horiz switch	Seven-position rotary switch	When in the oscilloscope mode, selects the horizontal sweep rate or selects the external horizontal input.

Table 4-1. Controls, Indicators, and Connectors (Cont)

Item	Description	Function
Horiz Vernier control	Potentiometer	Horizontal sweep rate Vernier or external horizontal input gain Vernier. Calibrated position is fully clockwise.
Ext Horiz	BNC connector	Allows external horizontal inputs for oscilloscope.
Trig Level	Stacked concentric potentiometer and switch	Selects oscilloscope trigger level and trigger mode. Center knob selects the level of trigger. Outside (largest) knob controls the trigger mode. In Auto position, continuous sweep with no vertical input signal, syncs on vertical input. Normal position, no sweep unless vertical input is present, syncs on vertical input.
Position controls	Stacked concentric controlled potentiometer	Controls the position of the CRT display, when in the oscilloscope mode.
• Vert	Center (small) control knob	Controls the vertical position of the CRT display
• Horiz	Outside (large) control knob	Controls the horizontal position of the CRT display
Vert switch	Four-position rotary switch	Oscilloscope operation uses values marked to the right of the switch, indicating volts per division on the CRT. Values marked to the left of the switch are used during modulation display mode, indicating range for calibrated FM deviation. NOTE: Frequency Counter sensitivity is also controlled by this switch.
Vert Vernier control	Potentiometer	Vernier gain control for vertical inputs to the CRT when in the oscilloscope mode. Fully clockwise is the calibrated position.
Vert/Sinad/DVM/ Counter In connector	BNC connector	Signal input to the equipment for the following operations: a. External vertical for oscilloscope operation b. SINAD Meter c. Frequency Counter d. Digital Voltmeter

Table 4-1. Controls, Indicators, and Connectors (Cont)

Item	Description	Function
Type N connector	RF In/out connector	RF input in the power monitor or monitor mode, RF output in the generate mode.
Potentiometer	RF Level Variable control	Vernier control of RF output level. Exceeding the AM limit marking in AM generation mode may result in a distorted output.
14-position ganged atten and switch	RF Level Step switch	Ten dB per step control of RF output level in generate mode. Also serves as RF input level step attenuator in monitor and spectrum analyzer modes.
Ext Wattmeter	Connector	Allows input from Motorola ST-1200 series in-line wattmeter elements for measurement and CRT display of forward and reflected transmitted power.
Freq Set controls	Stacked concentric potentiometers	Controls the duplex generator output frequency in the Duplex Generation mode.
• Coarse	Inside (small) control knob	Coarse frequency control.
• Fine	Outside (large) control knob	Fine frequency control.
Frequency offset control (0-10 MHz/Off /45 MHz)	Three-position switch	Selects the offset of the transmitted frequency from the selected receive frequency (Image/ Dplx switch determines side of selected frequency the offset will be). 0-10 MHz position allows frequency offset to be varied between 0-10 MHz. In the 45 MHz position the offset is variable over a small range around 45 MHz with the use of the Fine frequency control.
Output connector	BNC connector	Output connector for duplex generator output.
SIDE PANEL (fig. 4-2)		
Frequency Standard control	Potentiometer	Allows calibration of the time base frequency (freq std)
REAR PANEL (fig. 4-3)		
DC 8A	Line fuseholder (8 amp)	DC Input line fuseholder

Table 4-1. Controls, Indicators, and Connectors (Cont)

Item	Description	Function
DC IN power connector	4-pin connector	Connects to DC prime power source
AC power connector	3-pin connector	Connects to AC prime power source. Internally patched to accommodate either 100-110 VAC, 110-130 VAC, 200-220 VAC or 220-260 VAC.
AC 1.5A	Line fuseholder	AC line fuseholder.
10 MHz std IN connector	BNC connector	Provides for external 10 MHz time base input. Equipment automatically switches to external time base with an input at this connector.
10 MHz std OUT connector	BNC connector	Provides an output of the internal or external 10 MHz time base for external use.
488 BUS connector		Placement of I/O connector when IEEE-488 Interface Bus option is provided.
Blower power connector	4-pin connector	Placement of Blower power connector,

4-5. OPERATION

4-6. The operator may use the CRT display to become familiar with the functions the Communication System Analyzer is capable of performing. The unit may be preset to any of the functions the unit performs. As a function and its parameters are selected they are displayed on the CRT.

The unit contains a nonvolatile memory that stores frequently used data for fast access, reducing setup time. As a function is selected, if data for that function is stored, the data is displayed on the CRT.

One of the stored parameters may be used or the user may manually select (keyboard entry) the parameters required for the function. Selection of stored data or keyboard entry of data is cursor controlled. As a control is changed the CRT display changes to reflect the new parameter being used or function being performed.

4-7. CALIBRATE. The Communication System Analyzer may be calibrated to WWV or other time/frequency standards (figure 4-4). To calibrate the unit's time base (frequency standard) proceed as follows:

a. Connect antenna to RF In/Out connector.

b. Set FUNCTION switch to Monitor and DISPLAY to Gen/Mon Mtr.

c. Enter frequency of time/frequency standards station directly from keyboard.

d. Select AM function.

e. Using a tuning tool, adjust time base frequency calibration control (on left side of housing) until CRT frequency error display indicates less than 5 Hz error. Frequency settability to 0.5 part per million can thus be achieved using a 10 MHz frequency standard station.

NOTE

The time base output is also available on the rear panel for external measurement or laboratory calibration to better than the 0.5 ppm achievable with the above method.

NOTE

An external time base input is also provided on the rear panel.

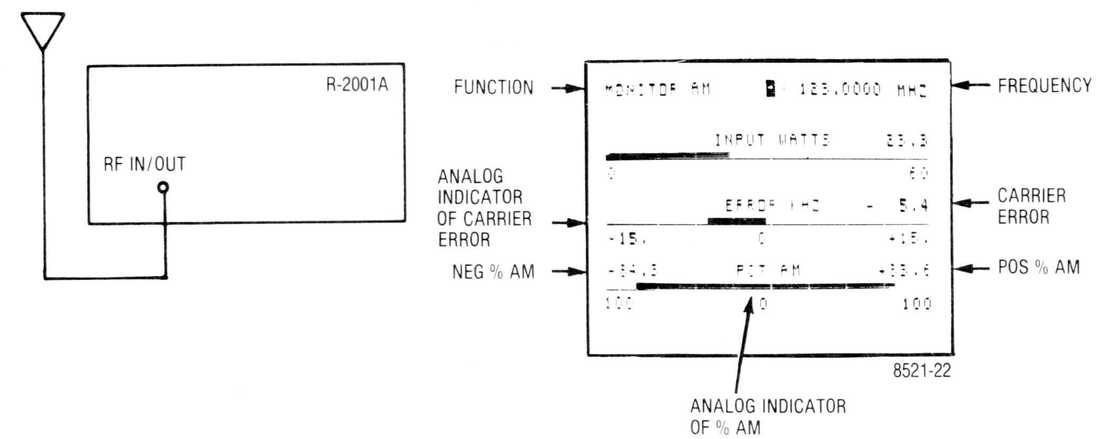

Figure 4-4. System Analyzer Time Base Calibrate Test Setup and CRT Display

4-8. GENERATOR OPERATION. The system generates RF frequencies for FM, AM, CW, SSB, and DSBSC types of transmission covering a range of 10 kHz to 1000 MHz. To generate a signal the FUNCTION switch is placed in the Gen. position.

NOTE

An RF protection circuit to protect against damage due to inadvertent application of RF power to the unit, when in a generate or sensitive monitor mode, is functional over the full monitor frequency range of the equipment (2 to 1000 MHz).

The type of signal is selected using the FUNCTION select LED indicator column. The unit can deliver an output of up to 1 volt into 50 Ohms. When in the AM generate mode the variable control (located in the RF SECTION on the front panel) should not be set above the AM limit mark. Exceeding this may cause distortion in the output.

NOTE

The RF protect circuit may trip if generator is run at full power output without having a 50-ohm load connected.

4-9. DUPLEX GENERATION. When operating in the duplex generate mode the offset frequency can be set to either 45 MHz or 0 to 10 MHz (adjustable). The Image/Dplx switch sets the offset frequency above (high) or below (low) the monitored frequency. When offset is in the 0 to 10 MHz range, the control range may include a foldback region. If the generator is operated in this foldback area erroneous frequency output indications can be given. Avoid areas where backward indication or a jittering display of the offset frequency are incurred. The following is an example of the duplex generator being used to setup repeater levels.

a. Connect DUPLEX GEN output to repeater receiver antenna input and repeater transmitter signal sample to RF In/Out connector. The Duplex Gen Output level is fixed at -30 dBm nominal.

b. Set FUNCTION switch to Gen and DISPLAY to Duplex Gen.

c. Select Duplex Monitor frequency (repeater transmit frequency) from memory table or enter directly from keyboard.

d. Set DUPLEX GENERATOR frequency to repeater receiver frequency.

e. Adjust PL and test tone deviation to desired level on display.

f. Set FUNCTION switch to Monitor and measure the deviation of the repeated signal.

NOTE

Switch function to power monitor and connect repeater transmitter (under 125 watts) directly to the RF In/Out connector to read power and frequency error, as well.

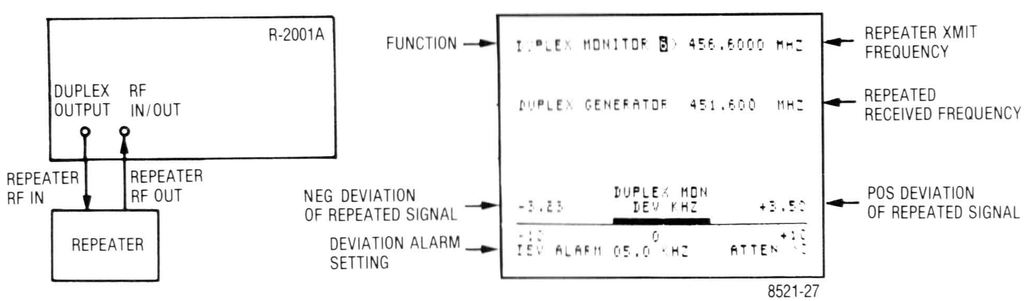

Figure 4-5. Duplex Generation Test Setup and CRT Display

4-10. FREQUENCY COUNTER. The frequency counter measures inputs in a range from 10 Hz to 35 MHz. The input to the frequency counter is through the Vert/Sinad/DVM/Counter in, BNC connector (located in the OSCILLOSCOPE section of the front panel). The counter sensitivity is controlled by the scope Vert switch. The following shows the minimum sensitivity for each switch setting:

Switch setting	Sensitivity
0.01	50 mV RMS
0.1	500 mV RMS
1.0	5V RMS
10.0	50V RMS

The autorange output of the counter is displayed on the CRT to a resolution of 0.1 Hz or 5 digits.

NOTE

Do not connect transmitter directly to the frequency counter input. Instead use the RF In/Out connector and the frequency error meter for transmitter frequency measurements.

4-11. SPECTRUM ANALYZER. Input to the spectrum analyzer is through the RF In/Out connector. Select the spectrum analyzer position on the DISPLAY column. Place the FUNCTION switch in the monitor position. Select the desired width of sweep by the Dispr/Sweep control. The center frequency is selected from the memory or entered directly from the keyboard, it is displayed at the top-right of the CRT. The following is an example of locating the frequency of an incoming signal with the spectrum analyzer.

a. Connect antenna to RF IN/OUT connector.

b. Set FUNCTION switch to Mon. and DISPLAY to Spect. Analyzer.

c. Select center frequency from memory table or enter directly from keyboard.

d. Adjust Disp/Sweep control for desired spectrum span.

e. Adjust Step attenuator if required to reduce sensitivity.

f. To determine whether a given displayed signal is valid or being internally generated, flip the Image/Dplx switch to the opposite position. If signal moves in frequency or disappears, it then/represents an internally generated spurious response or received image.

g. Use the RF Scan control to move desired signal to center of the screen. If the signal is located to the right of screen center line, move the RF Scan control clockwise into one of five positive stepping modes. If the signal is to the left of screen center line, turn the RF Scan control counter clockwise to one of five negative stepping modes.

h. Adjust Dispr/sweep control fully counterclockwise for 1 MHz spectrum span.

i. Again use RF Scan to recenter signal on screen.

j. Set DISPLAY to Gen/Mon Mtr.

k. Now adjust the RF scan control to minimize any existing frequency error between the incoming signal and the Monitor frequency.

l. The frequency indicated at the top of the screen is now that of the desired incoming signal. It can also be monitored for call signs, etc.

NOTE

The spectrum analyzer is functional but uncalibrated for level measurements in Power Monitor mode for transmitter testing with the built-in 125 watt 50 ohm load. (Observe "RF LOAD OVERTEMP" warning for high power levels or extended periods of use.)

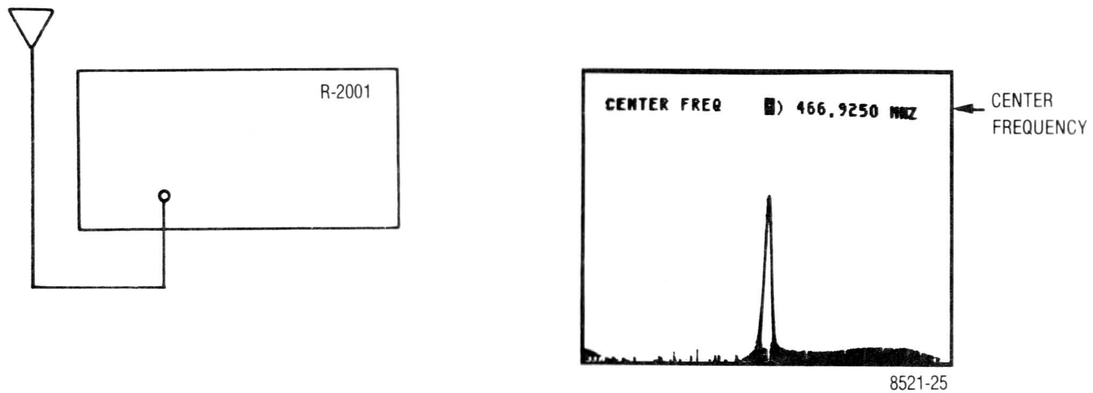

Figure 4-6. Spectrum Test Setup and CRT Display

4-12. MONITOR. The analyzer is capable of monitoring the same frequencies that it generates (para 4-9). Select Gen/Mon Mtr in the DISPLAY column and the modulation type in the FUNCTION column. Set the FUNCTION switch to the Monitor position for small signal samples or off the air monitoring. For high power signal monitoring (0.2w to 125w), set the FUNCTION switch to Pwr Mon.

CAUTION

To prevent undue stress on the protected circuits it is advisable to always switch the system to the power monitor mode before applying power in excess of 200 mw. Additional protection is also obtained by making it a practice not to leave the step attenuator in the 0 dB position.

NOTE

High-powered equipment in the 1-30 MHz range, which has unusually fast carrier rise times, may damage the system analyzer with repeated activation of the protect circuit. Ensure the FUNCTION switch is in the Pwr Mon position (this enables the protect circuit) before RF power is applied to the equipment.

In the monitor mode the CRT displays the type of signal being monitored, the selected frequency, power, error of the received frequency, and the modulation level.

4-13. EXT WATTMETER. When the analyzer DISPLAY is set to the Ext Wattmeter mode and the Motorola RTL-4055A in-line wattmeter adapter (supplied) is connected to the Ext Wattmeter jack the analyzer measures both forward and reflected power. The power rating of the wattmeter elements (Motorola ST-1200 series*), to be used, are displayed on the CRT. The following is an example of a test setup for external wattmeter operation. Figure 4-7 shows the test set connections and CRT display.

a. Select the EXT Wattmeter function by means of the arrow keys located below the DISPLAY column.

b. Plug the connector of the RTL-4055A In-Line Wattmeter adaptor into the "Ext-Wattmeter" jack located on the RF SECTION of the front panel.

c. Using the keyboard; enter the single digit which corresponds to the full scale power rating of the ST-1200 series element you plan to use.

d. Place the ST-1200 element in the In-Line Wattmeter adaptor and install element/adaptor assembly into transmission line.

NOTE

Arrow on In-Line Wattmeter Adaptor must point in the forward direction of the desired rf power flow through the adaptor.

e. Key transmitter and observe magnitudes of forward and reflected power as displayed simultaneously on the 2 analog meter bars and corresponding digital readouts.

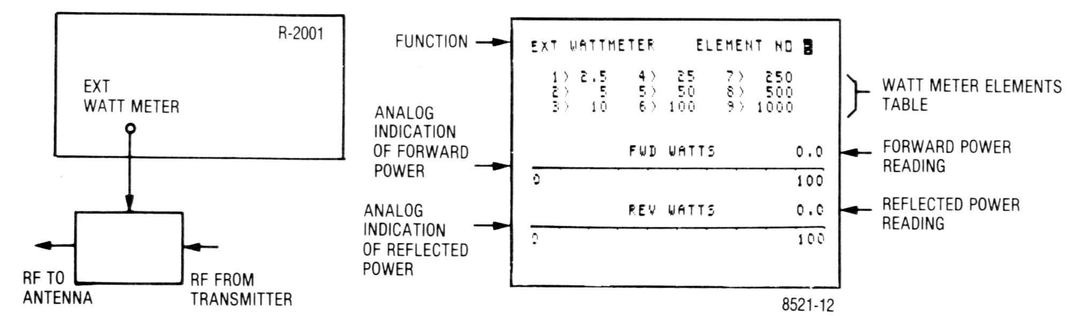

Figure 4-7. Wattmeter Test Setup and CRT Display

4-14. SIMULTANEOUS GENERATE AND MEASUREMENT OPERATIONS. The following test setups and CRT displays are examples of simultaneous generating and measurement operations.

a. FM Mobile radio setup for receiver sensitivity using Generator and SINAD meter.

1. Connect RF In/Out to mobile radio antenna connector and multipurpose measurement (SINAD) input to receiver audio output.

*Contact your Motorola Parts Source for ordering separately.

2. Set FUNCTION switch to Gen. and DISPLAY switch to Gen/Mon Mtr.

3. Select frequency from RF memory table or enter directly from keyboard.

4. Adjust 1 kHz level for 3.0 kHz deviation and RF level for 12 dB SINAD indication. (The mobile radio audio output may be set to the desired level using the DVM AC mode.)

5. Read receiver SINAD sensitivity in microvolts or dBm.

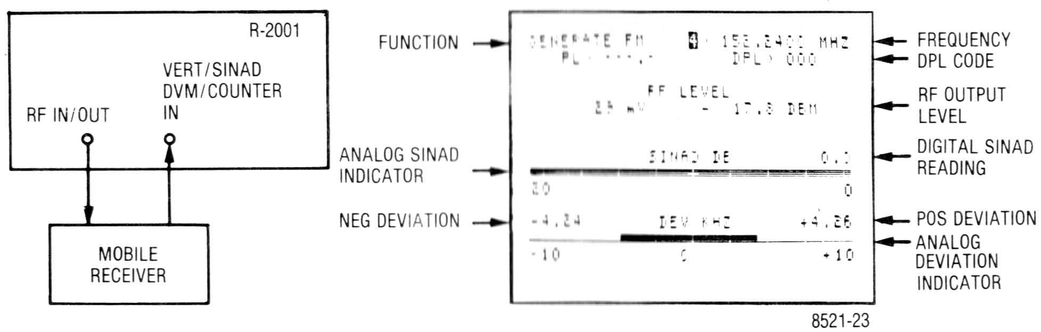

Figure 4-8. Test Setup for FM Receiver Sensitivity Using Generator and SINAD Meter with CRT Display

b. Test pager decode and alert function, and demonstrate simultaneous modulation.

1. Set FUNCTION switch to Gen and DISPLAY to Tone Mem.

2. Select pager frequency from RF memory table or enter directly from keyboard.

3. Enter pager tone code frequencies and select desired time sequence in memory table.

4. Activate and adjust Code Synth. Lvl. for 3.3 kHz deviation on Gen/Mon Mtr. display. (5 kHz system)

NOTE

Timing sequences 1 through 4 are preset and can not be changed. Timing sequences 5 through 8 are keyboard programmable for testing other pager types, upper and lower timing limits, or future schemes.

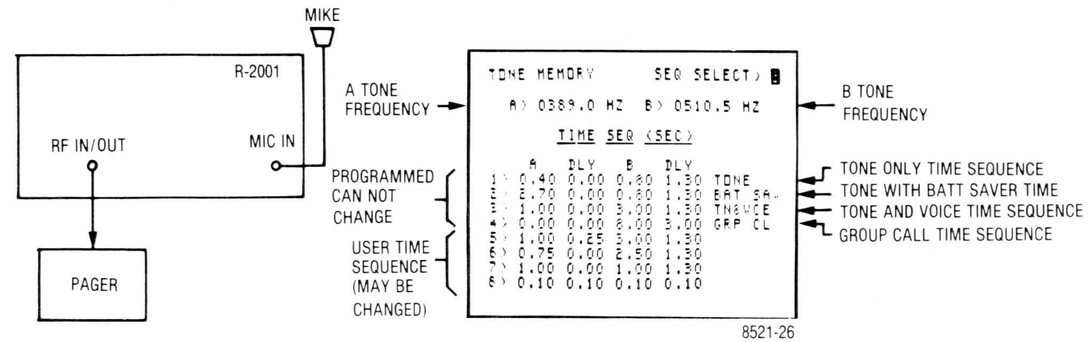

Figure 4-9. Test Setup for Pager and Alert Functions with CRT Display

c. Troubleshooting Receiver audio stages using "DVM and Signal Generate" function simultaneously.

1. Select the DVM function by means of the arrow keys located below the DISPLAY column.

2. Using the keyboard "down" arrow position the CRT cursor adjacent to the "DVM Mode" graphics.

3. Enter a "1" via the keyboard to select AC voltage measurement or a "2" for DC voltage measurement selection.

4. Set up the desired on-channel RF signal to provide an input to the receiver.

5. Set Function switch to "Gen". Set appropriate RF output level (as indicated on the CRT screen).

6. Apply test signals from the receiver audio stages to the instrument's "Vert/Sinad DVM/Counter In" input. DC Voltage measurement points are also applied to this same input. The supplied XI test probe may be used.

7. Refer to the CRT screen for an auto-ranging and analog/digital indication of either DC voltage or AC voltage and corresponding dBm level.

NOTE

The AC DVM indication of dBm is referred to 600 ohms.

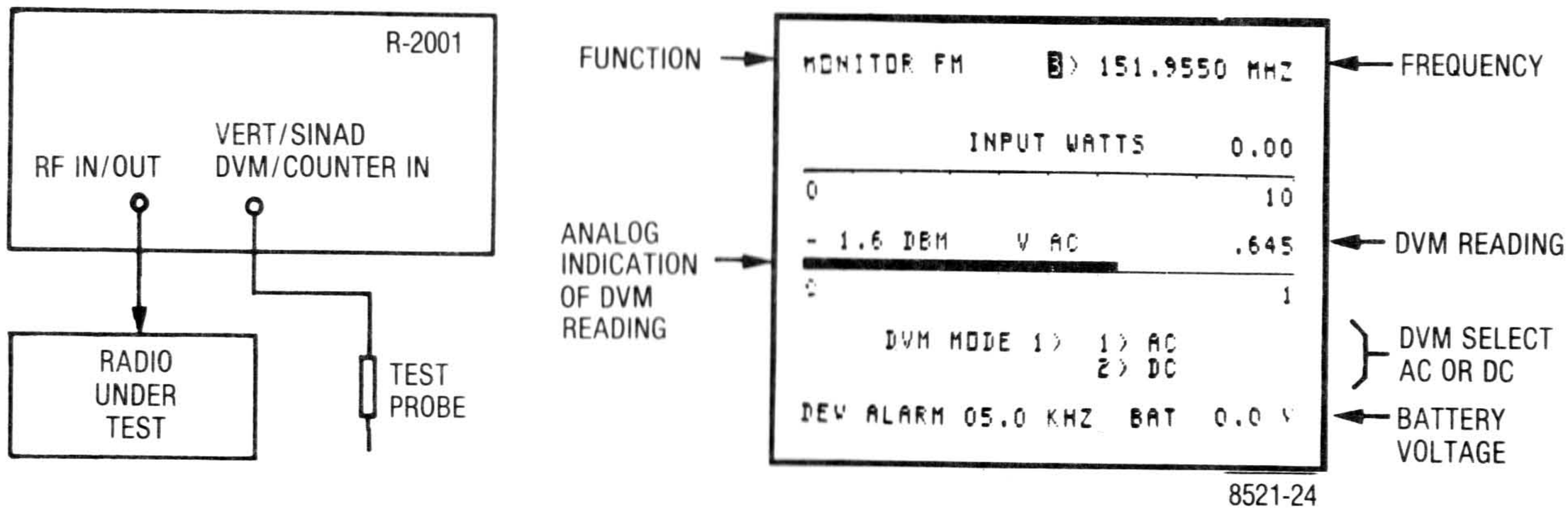

Figure 4-10. Test Setup for Using DVM and Signal Generate with CRT Display

SECTION V

MAINTENANCE

5-1. SERVICE

5-2. The Motorola Test Equipment Repair Center is charged with the service responsibility for all test equipment supplied by the Motorola Communications Group. The center maintains a stock of original equipment replacement parts and a complete library of service information for all Motorola test equipment.

5-3. Most in-warranty repair are performed at the center. Exceptions include repairs on some equipment not manufactured by Motorola which are performed by the original supplier under the direction of the Test Equipment Repair Center. Out-of-warranty service is performed on a time and materials basis at competitive rates and the maximum turn-around goal is less than ten working days. Customer satisfaction is continually surveyed by reply cards returned with repaired instruments.

5-4. The Test Equipment Repair Center also provides a convenient telephone troubleshooting service. Frequently, a user technician can troubleshoot a piece of equipment and isolate defective components under the direction of the Test Equipment Repair Center via telephone. Required replacement parts are then immediately shipped to the user thereby reducing shipping time and servicing costs. For telephone troubleshooting contact the Test Equipment Repair Center toll free at (800) 323-6967.

5-5. All other inquiries and requests for test equipment calibration and repairs should be directed to the Area Parts Office. They will contact the Test Equipment Repair Center, process the necessary paperwork and, if necessary, have the Center contact you to expedite the repair.

5-6. REPLACEMENT PARTS ORDERING

5-7. Motorola maintains a number of parts offices strategically located throughout the United States. These facilities are staffed to process parts orders, identify part numbers, and otherwise assist in the maintenance and repair of Motorola Communications products.

5-8. Orders for all replacement parts should be sent to the nearest area parts and service center listed below. When ordering replacement parts the complete identification number located on the equipment should be included.

5-9. ADDRESSES

5-10. General Offices

MOTOROLA INC.
Communications Division Parts Dept.
1313 E. Algonquin Rd.,
Schaumburg, Illinois 60196
Phone: 312-397-1000
Executive Offices: 1301 E. Algonquin Rd.,
Schaumburg, Illinois 60196

5-11. U.S. Orders

WESTERN AREA PARTS
1170 Chess Drive, Foster City,
San Mateo, California 94404
Phone: 415-349-3111
TWX: 910-375-3877

MID-ATLANTIC AREA PARTS
7230 Parkway Drive
Hanover, Maryland 21076
Phone: 301-796-8600
TWX: 710-862-1941

EASTERN AREA PARTS
85 Harristown Road
Glen Rock, New Jersey 07452
Phone: 201-447-4000
TWX: 710-988-5602

SOUTHWESTERN AREA PARTS
3320 Belt Line Road
Dallas, Texas 75234
Phone: 214-241-2151
TWX: 910-860-5505

GULF STATES AREA PARTS
8550 Katy Freeway
Houston, Texas 77024
Phone: 713-932-8955

MIDWEST AREA PARTS
1313 E. Algonquin Rd.
Schaumburg, Ill. 60196
Phone: 312-576-7322
TWX: 910-693-0869

EAST CENTRAL AREA PARTS
12995 Snow Road
Parma, Ohio 44130
Phone: 216-267-2210
TWX: 810-421-8845

PACIFIC SOUTHWESTERN AREA PARTS
9980 Carroll Canyon Road
San Diego, California 92131
Phone: 714-578-2222
TWX: 910-335-1634

SOUTHEASTERN AREA PARTS
5096 Panola
Industrial Blvd.,
Decatur, Georgia 30032
Phone: 504-981-9800
TWX: 810-766-0876

5-12. Canadian Orders

CANADIAN MOTOROLA ELECTRONICS COMPANY
Parts Department
3125 Steeles Avenue
East Willowdale, Ontario
Phone: 516-499-1441
TWX: 610-492-2713
Telex: 02-29944LD

5-13. All Countries Except U.S. and Canada

MOTOROLA INC., OR MOTOROLA AMERICAS, INC.
International Parts
1313 E. Algonquin Road,
Schaumburg, Illinois 60196 U.S.A.
Phone: 312-397-1000
TWX: 910-693-1592 or 1599
Telex: 722433 or 722424
Cable: MOTOL

CAUTION

This equipment contains parts that are subject to damage by static electricity. Proper precautions should be taken during handling.

5-14. MAJOR ASSEMBLIES

5-15. The Communication System Analyzer is designed for ease of maintenance. Most of the circuitry is on seven plug-in circuit boards. A list of all subassemblies is given in table 5-1. The assembly locations are shown in figures 5-1 and 5-2.

Table 5-1. List of Subassemblies

Ref. Des.	Item	Part Number As Labeled	Replacement Order Part No.
A1	Low Voltage Power Supply Module	01-P07897V001	RTP-1005A
A1A1	Low Voltage Power Supply Switcher Module	01-P07891V001	RTP-4016A
A1A2	Low Voltage Power Supply Output Module	01-P07856V001	RTP-4013A
A1A3	Low Voltage Power Supply Control Module	01-P07853V001	RTP-4012A
A1A4	Lower Voltage Power Supply Relay Module	01-P07892V001	01-80305A68
A2	Scope Amplifier Module	01-P00413N002	RTC-4007B
A3	Scope/DVM Control Module	01-P00409N002	RTC-4008B
A4	Receiver Module	01-P00389N002	RTL-1002B
A5	Synthesizer Module	01-P00385N002	RTC-1001B
A5A*	Digital Synthesizer Card	01-P00358N002	RTC-4009B
A5B*	RF Synthesizer Card	01-P00386N002	RTC-4010B
A6	Audio Synthesizer Module	01-P00426N002	RTC-4011B
A7	Processor Input/Output Module	01-P00405N002	RTC-4012B
A8	IEEE Bus Module (Optional)	01-P00203N002	RTC-4013B
A9	Microprocessor/Character Generator Module	01-P07894V001	RTC-4019B

Table 5-1. List of Subassemblies (Cont)

Ref. Des.	Item	Part Number As Labeled	Replacement Order Part No.
A10	High Voltage Power Supply Module	01-P07896V001	RTP-1006A
A11	RF Input Module	01-P00394N003	RTC-1002B
A11A1*	Protection/Power Meter Card	01-P00400N002	RTL-4061B
A11A2*	Converter/Wide Band Amplifier Card	01-P00398N002	RTC-4015B
A11A3*	Offset Generator Card	01-P00399N002	RTC-4016B
A12	Front Panel Interface Module	01-P07846V001	RTL-4086A
A13	Frequency Standard Module	01-P07898V001	RTL-1011A
A14	Front Panel Assembly	01-P07860V001	01-80305A64
A14A1	Display Board Assembly	01-P07843V001	1-80305A63
	Motherboard Assembly	01-P07894V001	RTL-4089A

* These items are solder-in submodules listed for reference purposes. These cards are not normally repaired or replaced individually.

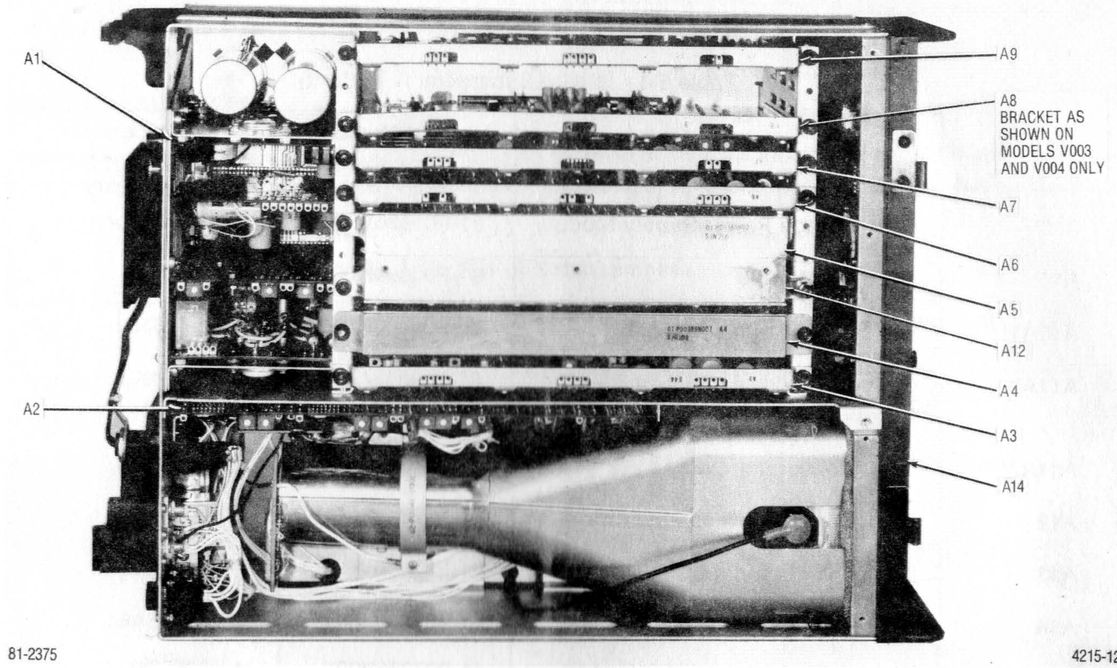

Figure 5-1. Communications System Analyzer, Top View, Cover Removed

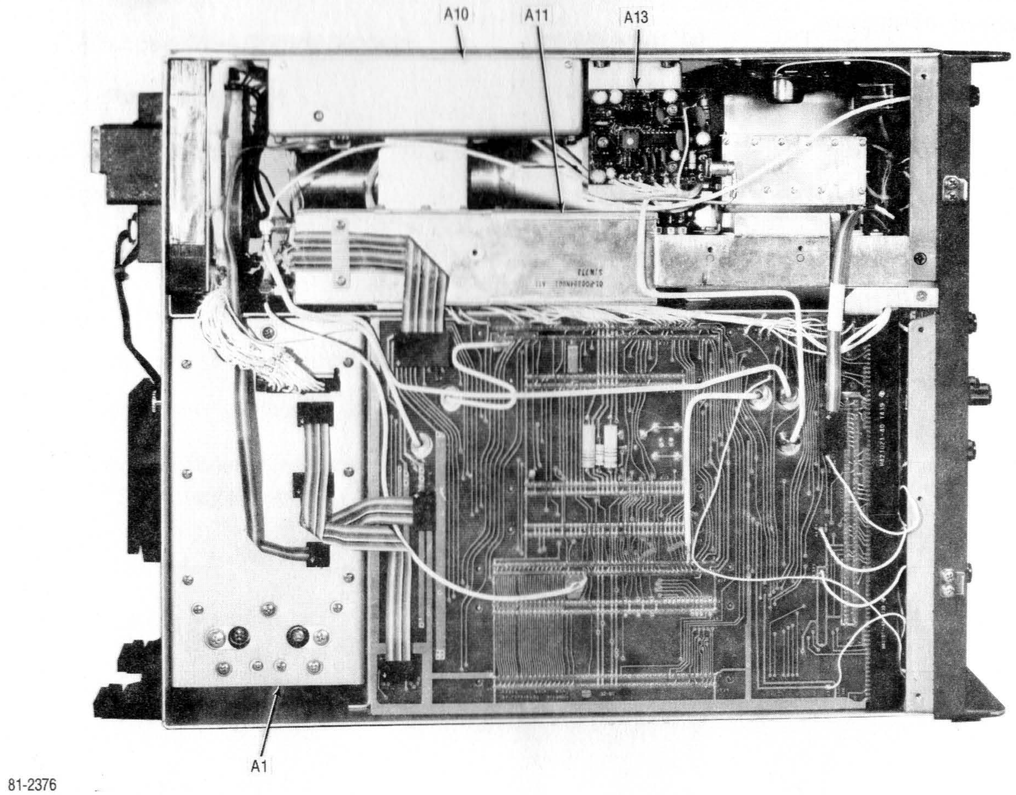

Figure 5-2. Communications System Analyzer, Bottom View, Cover Removed

5-16. THEORY OF OPERATION

5-17. General

5-18. The operation of the Communications System Analyzer can be divided into nine basic functions; Generate, Power Meter, Monitor, Duplex Generator, Code Synthesizer, Frequency Counter, Digital Voltmeter (DVM), Oscilloscope, and Sinad Meter. The general operation of the unit will simultaneously incorporate the basic functions to provide the total capability of the system.

5-19. The following discussion will cover the block diagrams for each of the basic functions plus a discussion on the processor control of the system. A functional block diagram of the total system is shown in figure 5-3. Only the major signal paths between each of the modules are shown to clarify the total system configuration.

5-20. System Control

5-21. System Control is the primary responsibility of the internal microprocessor. Front panel control and system status inputs to the processor are manipulated by the processor to provide the control for the operating mode. From the front panel the processor monitors the keyboards, the function select switch, the modulation control switch, the RF scan switch, the image switch, the bandwidth switch, the horizontal and vertical range switches, and the step attenuator switch. This information plus internal status information causes the processor to display the appropriate information on the CRT to program the center frequency, to set up the generate or monitor mode, and to make the internal switching arrangements for the selected operating state.

5-22. The interface to and from the microprocessor is via the processor bus. This bus consists of a 16-bit address bus, an 8-bit data bus, and a 7-bit control bus. This bus interfaces the processor to its program memory (ROM), scratch pad memory (RAM), IEEE interface, and the peripheral interface adapters (PIA). The PIA is the mechanism by which the processor interfaces with the system. A PIA consits of a dual 8-bit latch which may be programmed as either an input or output for the microprocessor. System input and control information passes to and from the microprocessor via three system control buses attached to a PIA.

5-23. Each system control bus consists of a 4 bit address bus, a 4 bit data bus, and an enable line. The 4 address bits determine which of 16 possible latches the 4 bits of data is to be sent to or received from. The enable line triggers the actual transfer of data. The three control buses within the system are called the RF control bus and the AF control buses 1 and 2. The RF control bus is as described above while the AF control buses consist of a single 4-bit address and 4-bit data bus and two enable lines. The resulting total input/output capability for the system buses is 16 latches at 4-bits each times 3 buses or 192 bits. A tabulation of buses and the controlling or input function of each bit is shown in table 5-2.

5-24. Systems with the IEEE remote control option interface the IEEE bus to the processor bus through a general purpose interface bus adapter (GPIB) on the IEEE interface module. When enabled all control inputs to the system pass through the IEEE bus and front panel controls are ignored. For more information on IEEE control see section 21.

5-25. Generate Mode

5-26. The generate mode provides a variable level RF output that is phase locked to the internal 10 MHz standard. AM, FM, and Sideband Modulation are possible on the output signal. A block diagram of the generate mode is shown in figure 5-4.

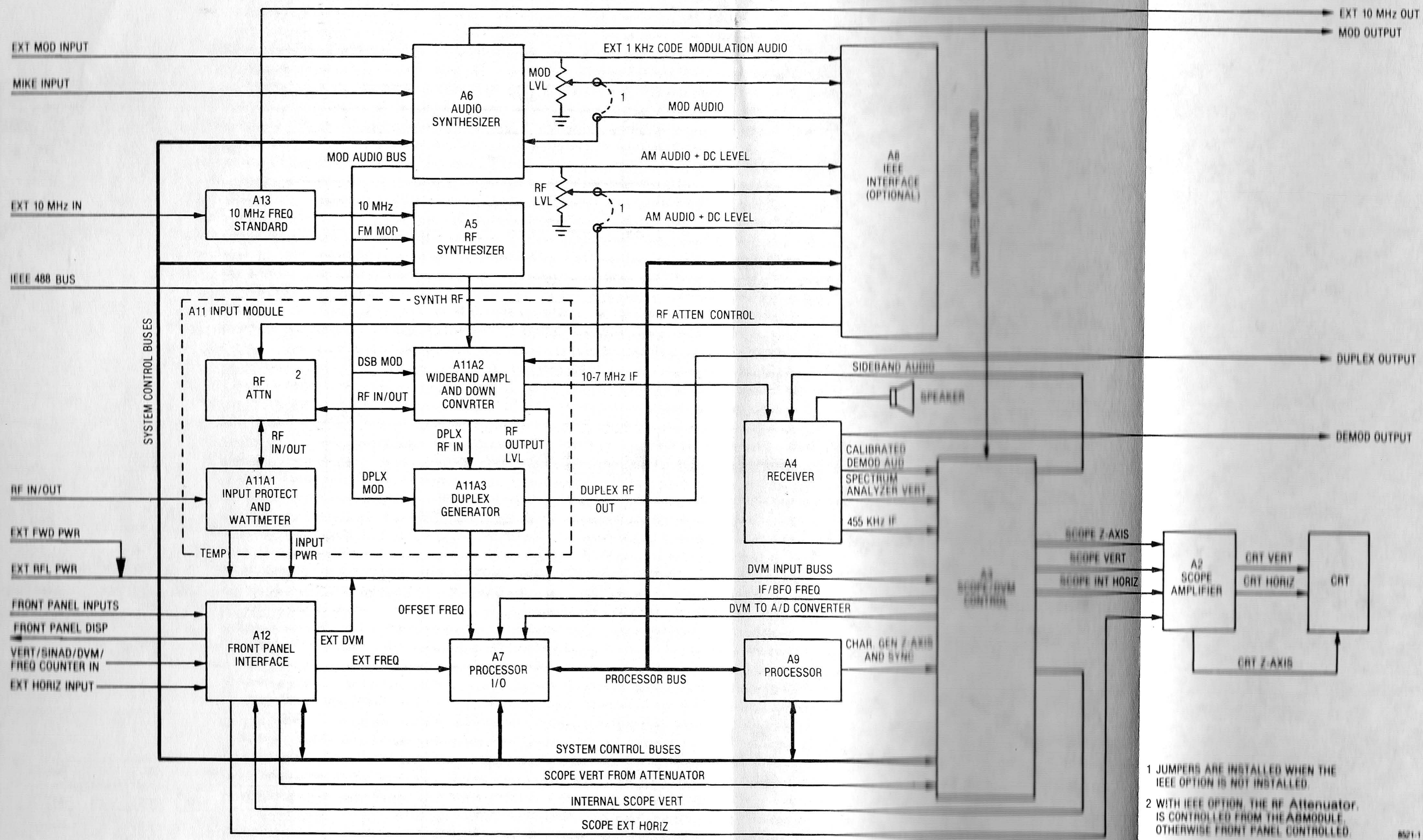

1 JUMPERS ARE INSTALLED WHEN THE IEEE OPTION IS NOT INSTALLED.

2 WITH IEEE OPTION, THE RF Attenuator, IS CONTROLLED FROM THE A8MODULE, OTHERWISE FRONT PANEL CONTROLLED.

85/21-1

Figure 5-3. Communications System Analyzer Block Diagram

Table 5-2. Control Buses and Functions

Data / ADRS	RF Bus D3	RF Bus D2	RF Bus D1	RF Bus D0	AF Bus #1 D3	AF Bus #1 D2	AF Bus #1 D1	AF Bus #1 D0	AF Bus #2 D3	AF Bus #2 D2	AF Bus #2 D1	AF Bus #2 D0	Data / ADRS
0	310-440 PLL A0				Audio Synth N0				Display Led's				0
1	310-440 PLL N0				Audio Synth N1				Function Led's				1
2	310-440 PLL N1				Audio Synth N2				Mode Led's				2
3	60 PLL N0				Audio Synth N3				Input Scope Atten				3
									0.001	0.01	0.1	1.0	
4	60 PLL N1				PL Sel	DPL CLK Enab	DPL Sel	AUDIO Synth N4			Atten Int/Ext Sel	Ext In AC/DC Sel	4
5	60 PLL N2				MOD To Spkr Enab	Audio Atten 30 dB	Aduio Atten 20 dB	Audio Atten 10 dB	RF Atten Position				5
6	60 PLL N3				DPLX MOD Enab	DSBSC MOD Enab	FM MOD Enab	AM MOD Enab	Scan Switch Position				6
7	310-440 PLL A1		60 PLL N4						IF Overl'd In	SIG Present In	RF Input <+20 dB In	WB/NB Sw In	7
8			500-1000 Out Enab	250-500 Out Enab	DVM MODE Select				$\overline{\text{CSSG}}$ $\overline{\text{Cont}}$ Sw In	$\overline{\text{CSSG}}$ $\overline{\text{Burst}}$ Sw In	Hi/Lo Image Sw In	Gen Sw In	8
9	WB MOD Enab	(MOD) x (2) Enab	MOD $\overline{\text{INV}}$/INV Sel	MOD FM/SWP Sel		Pk Det FM MOD Enab	Pk Det AM MOD Enab	Pk Det Demod Enab	Scope Vertical Switch Pos In				9
									$\overline{\text{10 V/ DIV}}$	$\overline{\text{1V-100kHz DIV}}$	$\overline{\text{0.1V-10kHz DIV}}$	$\overline{\text{0.01V-1kHz DIV}}$	
A	0.01-1000 Sel	500-700/ 700-1000 VCO Sel	LOOP INV/$\overline{\text{INV}}$ Sel	MOD Disable		Int DVM x 0.1 Enab	WB/NB Sel	IF/BFO Freq Sel	$\overline{\text{Mon}}$ Sw In	Scope Horiz Switch Pos Sw In			A
B					Horiz Scope Mode Sel		Vert Scope Mode Sel						B
C					Pwr MTR Enab	(Mon + DSB)/ Gen Sel		.01-1 /1-10 Swp Sel					C
D	SSB Demod Enab	FM Demod Enab	AM Demod Enab	Demod To Spkr Enab	Scope Time Base CTL								D
					SSC3	SSC2	SSC1	SSC0					
E	WB/NB Sel	Demod INV/$\overline{\text{INV}}$ Sel	Alarm Enab	LIN IF/ Log IF Sel	Scope Time Base CTL				DVM AC/DC Sel	Freq Cntr Range			E
					SSC7	SSC6	SSC5	SSC4					
F									Ctr/DVM Sel	Counter Input Sel			F
										IF/BFO	Offset	Ext	

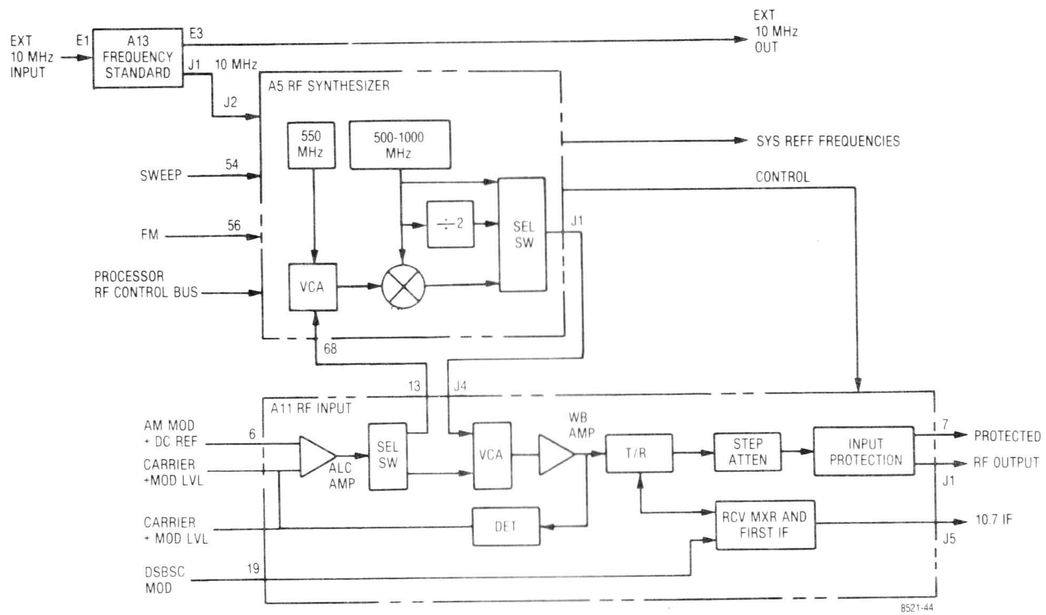

Figure 5-4. Generate Mode Block Diagram

5-27. The Frequency Standard module (A13) contains a 10 MHz standard oscillator with buffering and switching to provide a 10 MHz signal to the EXTERNAL 10 MHz OUTPUT and to the RF Synthesizer (A5). A provision is made for the application of an EXTERNAL 10 MHz INPUT which causes the internal standard to shut down and the EXTERNAL 10 MHz INPUT to be switched to the EXTERNAL 10 MHz OUT and to the RF Synthesizer.

5-28. The 10 MHz standard input to the RF synthesizer is digitally divided down to provide SYSTEM REFF FREQUENCIES for the frequency counter, the zero beat detector, the second local oscillator in the receiver, and the processor timing reference. Additionally reference frequencies are provided for a fixed 550 MHz locked loop and for a programmable 500 MHz-1000 MHz locked loop. The programming of the 500 MHz-1000 MHz locked loop is provided by the RF CONTROL BUS from the processor. The SELECT SWITCH selects one of three possible output points for the SYNTH RF output signal. The first is from the 500 MHz-1000 MHz loop directly. The second is from a divide by two on the output of the 500 MHz-1000 MHz loop which gives frequencies from 250 MHz to 500 MHz. For outputs below 250 MHz, the output of the 500 MHz - 1000 MHz loop is mixed with the fixed 550 MHz signal and the difference signal used for the output. For this output the processor programs the 500 MHz - 1000 MHz loop for frequencies between 550.01 MHz and 800 MHz to obtain outputs from 10 kHz to 250 MHz respectively.

5-29. FM and SWEEP Modulation is implemented within the 500 MHz-1000 MHz loop. FM capability is 200 kHz peak which when divided by two gives the 100 kHz peak requirement. Similarly the sweep capability is 10 MHz peak which provides the 5 MHz requirement for the sweep generator and spectrum analyzer requirements.

5-30. The SYNTH RF signal is amplified and leveled in the RF Input module (A11). The signal level at the output of the wideband amp is detected and compared to the AM MOD & DC REF signal from the front panel level control. If there is a difference between the two signal levels, the ALC amp provides an error voltage. The error voltage controls the attenuation of the Voltage Controlled Attenuator (VCA) in the direction that will make the detected RF output equal to the AM MOD & DC REF signal. There are two possible VCA's for the output leveling. The VCA within A11 is used for frequencies from 1 MHz to 1000 MHz. For frequencies below 1 MHz, the VCA on A11 is set to minimum attenuation and the VCA on the RF Synthesizer module is used for leveling. Amplitude modulation is incorporated by suming the modulation signal with the DC reference signal to force the leveling loop to vary the output level in proportion to the modulating signal. The signal from the RF level detector (CARRIER + MOD LVL) is used by the processor for the determination of RF output level and the percent AM. The leveled output range of the Wideband Amp is from -3 dBm to +13 dBm (0.16 to 1.0 Vrms).

5-31. The leveled output from the Wideband Amplifier is applied to the Generate/Monitor (T/R) switch. For AM, FM, and CW signals the switch connects the amplifier output to the Step Attenuator. For Double Sideband Suppressed Carrier (DSBSC) the T/R switch is in the "R" position where the amplifier output is connected to the local oscillator port on the receive mixer and the attenuator is connected to the RF port. The DSBSC MOD signal is then used to drive the IF port of the mixer giving a DSBSC signal at the RF port and thus at the Step Attenuator.

5-32. Coarse level control in 10 dB increments is provided by the Step Attenuator. The total range of the attenuator is from 0 dB to 130 dB attenuation. For the basic R2001B the Step Attenuator is controlled directly by a shaft to the front panel knob. With the IEEE control option the Step Attenuator is electrically programmable and controlled by the processor. The front panel knob in this case is connected only to a rotary switch which directs the processor in setting the attenuation level. Under IEEE control, commands via the IEEE bus determine the attenuator setting. (See section 21.)

5-33. The RF signal from the Step Attenuator passes through the input protection circuitry to the RF Output jack. A level detector on the RF Output jack monitors the power level at the jack. If power in excess of 200 mW is applied to the Output jack, the protection circuit will activate and switch the RF Output jack to the internal 50 ohm load. This action protects the Wideband Amp and Step Attenuator against burnout. A signal line from the protection network signals the processor that the system is in the protected mode. The processor in turn activates the CRT and alarm warnings.

5-34. Power Meter

5-35. Input power measurements are made with the RF Input terminated into an internal 50 ohm load. This termination is the same one used for the protect mode when in the generate or monitor functions. A block diagram of the power meter is shown in figure 5-5.

5-36. For the power meter mode the processor sets the WATT METER ENABLE line to cause the RF input jack to be switched to the 50 ohm power termination. For modes other than the power meter, an Input Detector on the RF Input jack detects when the input power has exceeded 200 mW and then switches the input to the load.

5-37. The switch is a single pole double throw configuration so that when switched to the RF load the path to the Step Attenuator and Converter is open circuited. However, leakage across the open switch provides sufficient signal for operation of the normal monitor functions.

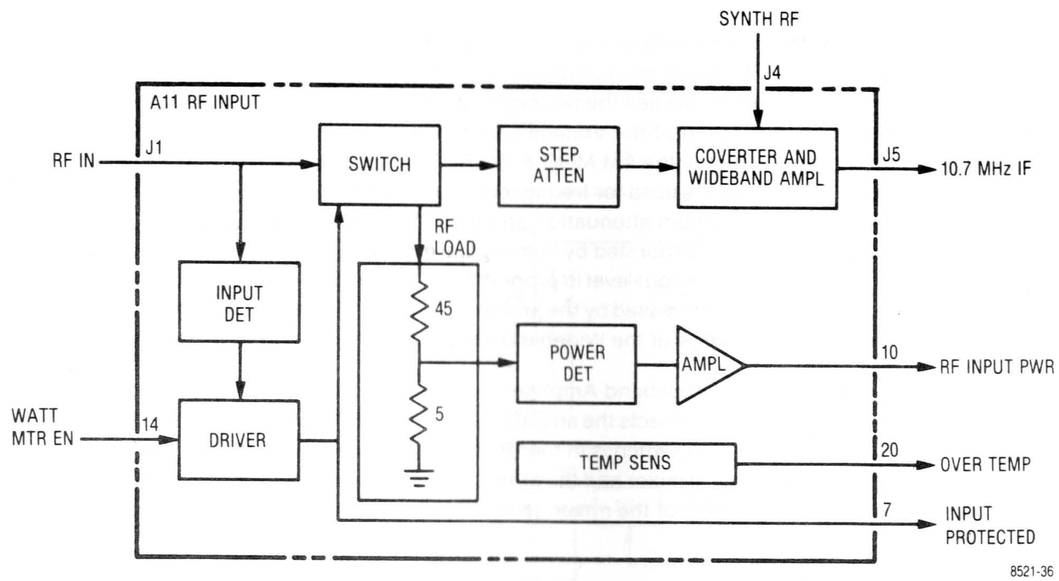

Figure 5-5. Power Meter Block Diagram

5-38. A sample of the RF voltage being applied to the RF Load is detected by the Power Detector to give a DC output proportional to the peak RF voltage. The amplifier following the detector buffers and gain adjusts the detected voltage to provide the RF INPUT POWER signal to the processor. The processor then determines and displays the RF input power.

5-39. A Temperature Sensor located near the flange of the RF Load alerts the processor when the load temperature exceeds 80° C. The processor reacts to the OVER TEMPERATURE signal by displaying a warning message on the CRT and by sounding the audible alarm.

5-40. Monitor Mode

5-41. The monitor mode allows RF signals from an antenna or from a transmitter directly to be checked for frequency error, modulation level, and spectral content. AM, FM, and sideband modulations can be accommodated with this system. A block diagram of the monitor mode is shown in figure 5-6.

5-42. The RF signal to be monitored is applied to the RF Input jack on the RF Input module (A11). If the input level is less than 200 mW the input signal passes directly through the Input Protection circuitry to the Step Attenuator. For input levels greater than 200 mW the protection circuit switches the input to the internal load and signal the operator to switch to the Power Monitor mode. In this case, RF leakage (paragraph 5-37) through the protection circuits provides the input signal to the Step Attenuator.

5-43. For the monitor mode the T/R switch is set so that the RF input from the Step Attenuator is connected to the RF port on the receive mixer. The output from the wideband amp is switched to the local oscillator port on the receive mixer. The processor programs the RF Synthesizer for an output frequency that is offset from the frequency to be monitored by 10.7 MHz. The offset may be above or below the center frequency as selected by the front panel image switch.

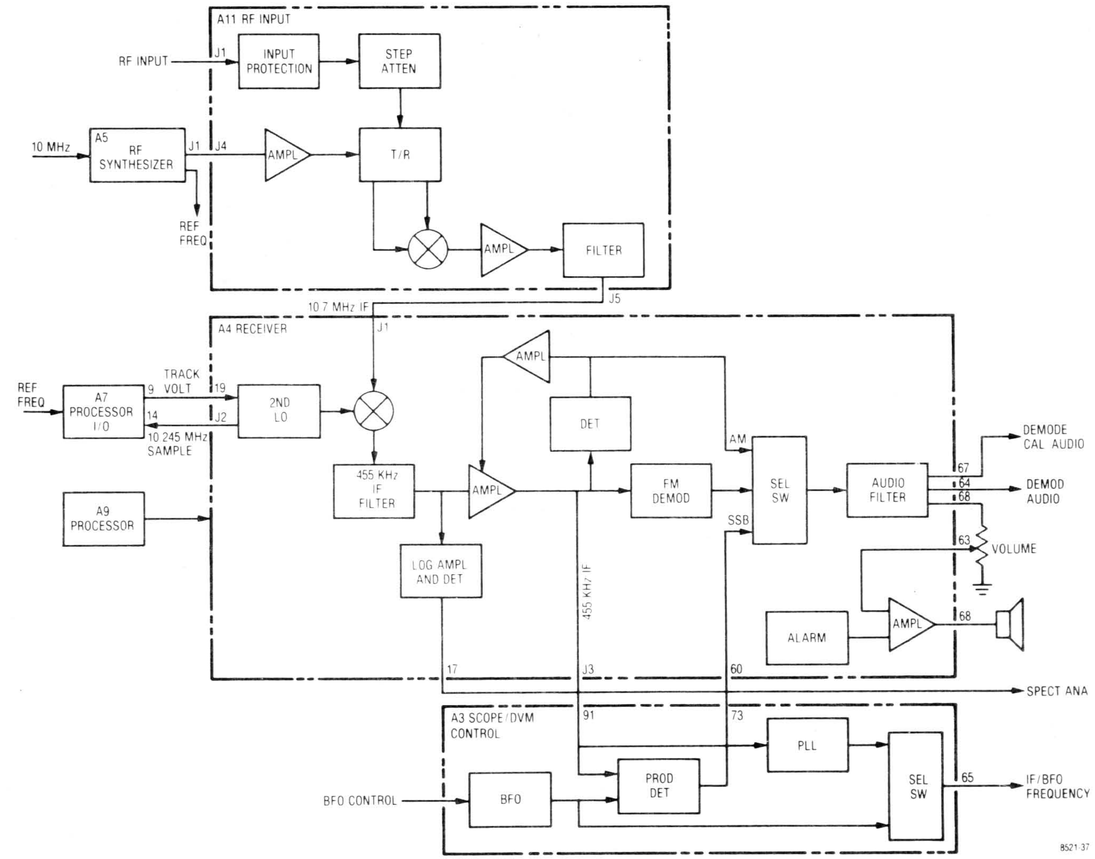

Figure 5-6. Monitor Mode Block Diagram

5-44. The 10.7 MHz difference signal at the IF port of the receive mixer is amplified and selected by the first IF Amplifier and Filter. The Amplifier provides sufficient gain so that the overall gain of the RF Input module is 10 ±2 dB. The IF filter provides a modulation acceptance bandwidth of ±100 kHz. The filter output is the 10.7 MHz IF signal to the Receiver module (A4).

5-45. A second mixer in the receiver module down converts the 10.7 MHz IF signal to 455 kHz by mixing the input signal with a 10.245 MHz Second Local Oscillator. The Second Local Oscillator is phase locked to the 10 MHz system standard so that its frequency is as accurate as the standard. The phase locked loop for the Second Local Oscillator is split between two modules. A 10.245 MHz SAMPLE signal is compared with the REFERENCE FREQUENCIES from the RF Synthesizer on the Processor I/O module (A7). The comparison provides a TRACKING VOLTAGE error signal to the 10.245 MHz oscillator which corrects its frequency to hold it in lock.

5-46. Immediately following the second mixer is the IF filter. The IF filter is selectable between a narrowband (±6 kHz mod acceptance) and a wideband (±100 kHz mod acceptance) bandwidth. The bandwidth is under the control of the processor and is selected by the bandwidth switch on the front panel.

5-47. The output signal from the IF filter has two possible paths. The path to the Log Amplifier and Detector provides the spectrum analyzer capability. The other path is the linear IF Amplifier for AM, FM, and SSB demodulation. The output level of the Amplifier is detected to give amplitude modulation and to provide the AGC control on the IF amplifier. The IF signal is applied to the FM Demodulator and is sent to the Scope/DVM Control module (A3) for SSB demodulation and for frequency error determination.

5-48. Demodulated audio from the selected demodulator is routed to the Audio Filter by the Select Switch under processor control. The Audio Filter provides post detection filtering for both wide and narrow band modes. The output of the Audio Filter is three signal lines. The Demod Calibration Audio line provides the calibrated audio levels for modulation level determination. A Demod Audio output provides a level adjusted signal to the front panel Demod Out jack. Speaker audio is level adjusted by the front panel volume control and then amplified by the Audio Amplifier on the Receiver module.

5-49. The Audio Amplifier sums the audio from the demodulator with the Alarm audio. The Audio Amplifier provides a 0.5 watt output capability to the system's internal speaker. The Alarm generator is under the control of the system processor.

5-50. SSB demodulation is implemented on the Scope/DVM Control module by multiplying the 455 kHz IF signal from the Receiver with a signal from the Beat Frequency Oscillator (BFO). The BFO is controlled from the front panel and typically has a frequency range of 455 ±3 kHz. The BFO signal is switched with the output of the 455 kHz IF Phase Locked Loop (PLL) to the frequency counter for frequency error determination. The 455 kHz PLL filters and shapes the IF signal to make it suitable for frequency counting.

5-51. When in the spectrum analyzer mode the linear IF Amplifier is shut down and the Log Amplifier is activated. The output of the Log Amplifier and Detector is a DC voltage that is proportional to the log of the 10.7 MHz IF input level. The log circuit has a dynamic range of approximately 80 dB, covering input levels from -100 dBm to -20 dBm. The SPECTRUM ANALYZER signal from the Log Amplifier is the vertical input to the scope for the spectrum analyzer display.

5-52. Duplex Generator

5-53. Simultaneous generate and monitor functions are available with the use of the Duplex Generator. The frequency spread between generate and monitor frequencies is limited to a range of 0 to 10 MHz and a fixed frequency of 45 MHz. A block diagram of the Duplex Generator function is shown in figure 5-7.

5-54. The Duplex Output signal is generated by mixing the local oscillator signal for the first receive mixer with a signal from the Offset Oscillator. The Offset Oscillator is at the frequency equal to the desired spread between generate and monitor frequencies less the 10.7 MHz IF offset. The monitor function is unaffected by the duplex mode and operates as described under paragraph 5-40.

5-55. Frequency modulation of the duplex output is obtained by modulating the Offset Oscillator frequency via the OFFSET MOD signal line. Control of the Offset Oscillator is directly from the front panel of the system. A OFFSET FREQUENCY output from the oscillator provides an input to the frequency counter for the determination of the duplex frequency.

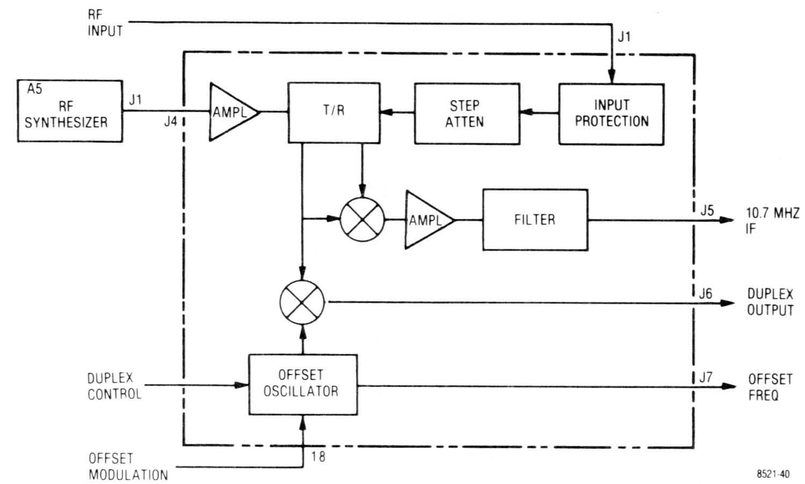

Figure 5-7. Duplex Generator Block Diagram

5-56. Code Synthesizer

5-57. Three simultaneous modulation sources are possible with the internal Code Synthesizer. A private line (PL) or Digital Private Line (DPL) source, a fixed 1 kHz source, and external modulation sources are individually level controllable and sumed together to give the composite modulation audio. The Code Synthesizer provides the modulation source for the system in the generate mode and can be used as an audio frequency source when in the monitor mode. For the IEEE option a provision is made to allow processor control of the modulation levels. A block diagram of the Code Synthesizer is shown in figure 5-8.

5-58. The PL signaling sequence generator is an Audio Synthesizer with an output frequency range from 5 Hz to 10 kHz in 0.1 Hz steps. The frequency is programmed by the processor in response to the operator's request from the keyboard through the CRT display. The Programmable Attenuator following the synthesizer provides 10 dB and 30 dB attenuation levels for the tone remote access sequence.

5-59. DPL Code words are generated by the processor in response to the code entered by the operator. The 23-bit DPL word is stored in the DPL Generator and continuously output when selected. Either PL or DPL signals are switched to the Code Synthesizer Level control on the front panel.

5-60. A 1 kHz reference signal from the RF Synthesizer is bandpass filtered to provide a low distortion 1 kHz sinewave to the front panel 1 kHz Level Control.

5-61. Two sources of external modulation are possible. A standard Motorola microphone interface jack on the front panel and a BNC front panel jack are provided. The microphone input is connected to an IDC circuit for peak limiting. The composite of the two external modulation sources is the signal to the External Level control on the front panel.

5-62. Systems without the IEEE option will have the wipers of the level control pots jumpered to their respective inputs to the summation amp on the Audio Synthesizer module (A6). Those systems with the IEEE option will select on the IEEE Interface module (A8) either the tops of the level controls or their wipers to the Programmable Attenuators for remote or local control respectively. While in the IEEE Control mode the processor controlled Programmable Attenuator on the IEEE module provides the modulation level control. For the local mode the attenuators are programmed for zero attenuation so that the wipers of the level controls set the modulation levels directly.

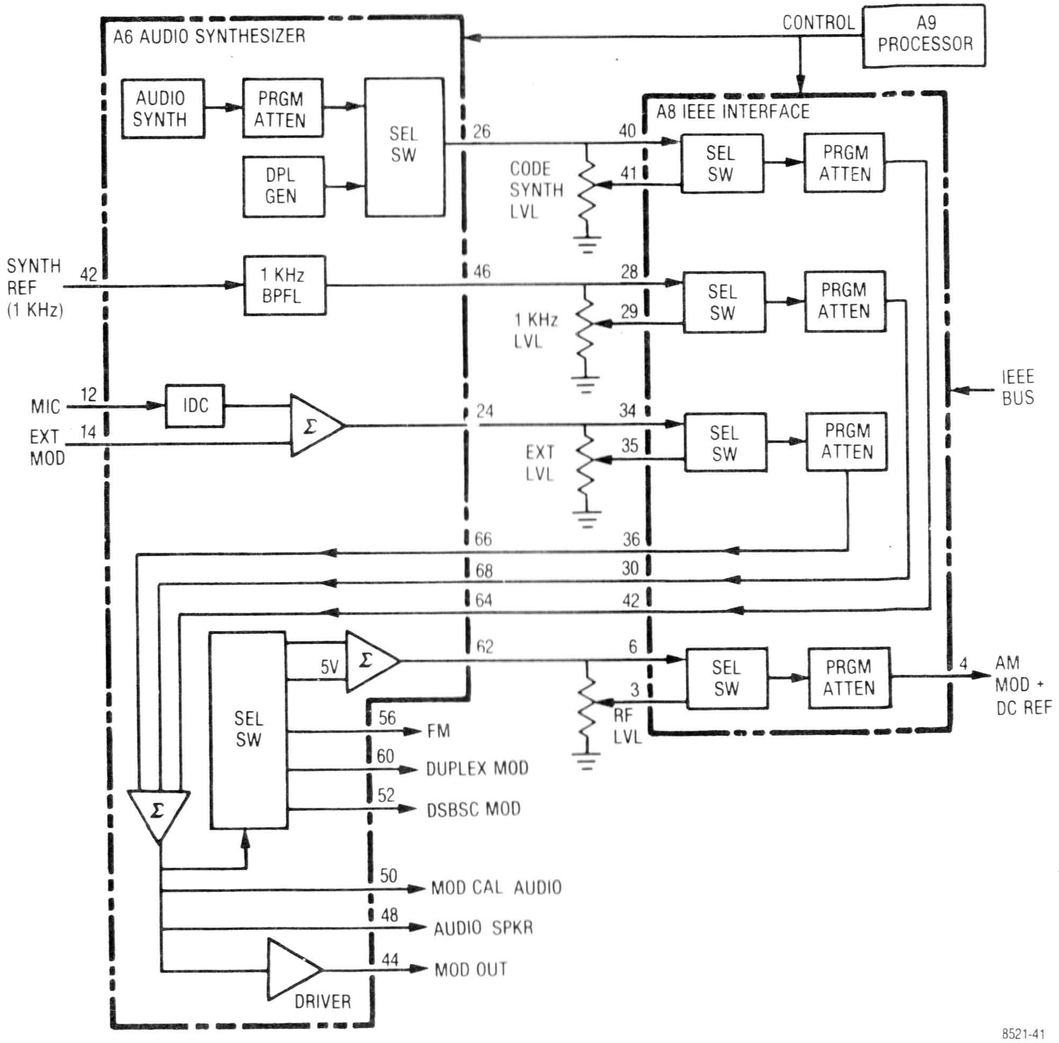

Figure 5-8. Code Synthesizer Block Diagram

5-63. The three modulation sources are sumed together on the Audio Synthesizer module after the level controls. The composite modulation signal is then switched to the appropriate modulator and applied to the modulation determination circuitry (MOD CAL AUDIO), the audio amplifier (SPKR AUDIO), and the Modulation Output jack (MOD OUT) on the front panel. The signal to the front panel jack is buffered by a Driver Amplifier to provide a low driving source impedance.

5-64. The AM modulation signal at the output of the Select Switch is sumed with a +5 volt signal. This combination provides a DC level to control the average output power of the wideband amp in the RF Input module, and a superimposed modulation signal to give an AM output. The RF Level control on the front panel for local control or the Programmable Attenuator on the IEEE module provide local or remote RF level control by simultaneously attenuating the DC level and the modulating signal. The resulting signal is the AM MOD & DC REFERENCE signal to the RF Input module.

5-65. Frequency Counter

5-66. Three possible signal sources are made available to the frequency counter for frequency determination. Two of the inputs are from internal system points for the determinations of the offset frequency (OFFSET), and the monitored carrier error frequency (IF/BFO). The third input is the external input (FREQ CNTR INPUT) on the front panel. A block diagram of the frequency counter function is shown in figure 5-9.

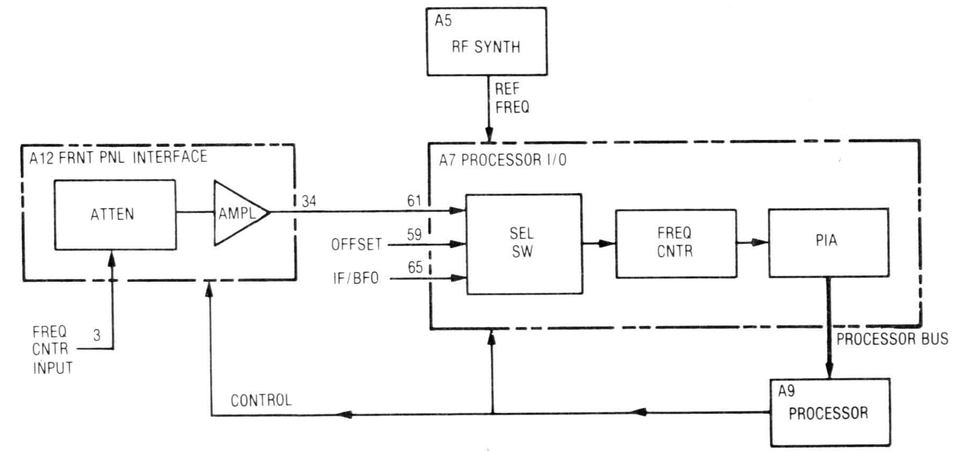

Figure 5-9. Frequency Counter Block Diagram

5-67. The external input signal is routed to the Front Panel Interface module (A12). A range Attenuator on the Interface module provides variable sensitivity settings according to the vertical range switch setting on the front panel. An Amplifier following the range Attenuator amplifies and limits the signal amplitude for the frequency counter input.

5-68. A Select Switch on the Processor I/O module (A7) routes the desired signal to the Frequency Counter circuitry. The signal selected is controlled by the processor and is determined by the operating mode of the system.

5-69. A 16-bit gated accumulator is used to determine the input frequency. Gate times from 1 msec to 10 sec are automatically selected by the processor to give the maximum possible resolution. The gate times are derived from the RF Synthesizer REFERENCE FREQUENCIES and thus are as accurate as the system time base.

5-70. The 16-bit Frequency Counter output is transferred directly to the processor bus through a Peripheral Interface Adapter (PIA). The processor in turn adjusts the data for the gate time used and then processes the information to obtain the required frequency display.

5-71. Digital Voltmeter (DVM)

5-72. The processor through the DVM circuitry has access to voltage information at a large number of points throughout the system. From this information the processor is able to determine and display parameters such as; output power level, modulation level, input power level and the like. In addition an external voltage applied to the DVM input jack on the front panel can be measured and displayed for external voltage measurements. A block diagram of the DVM function is shown in figure 5-10.

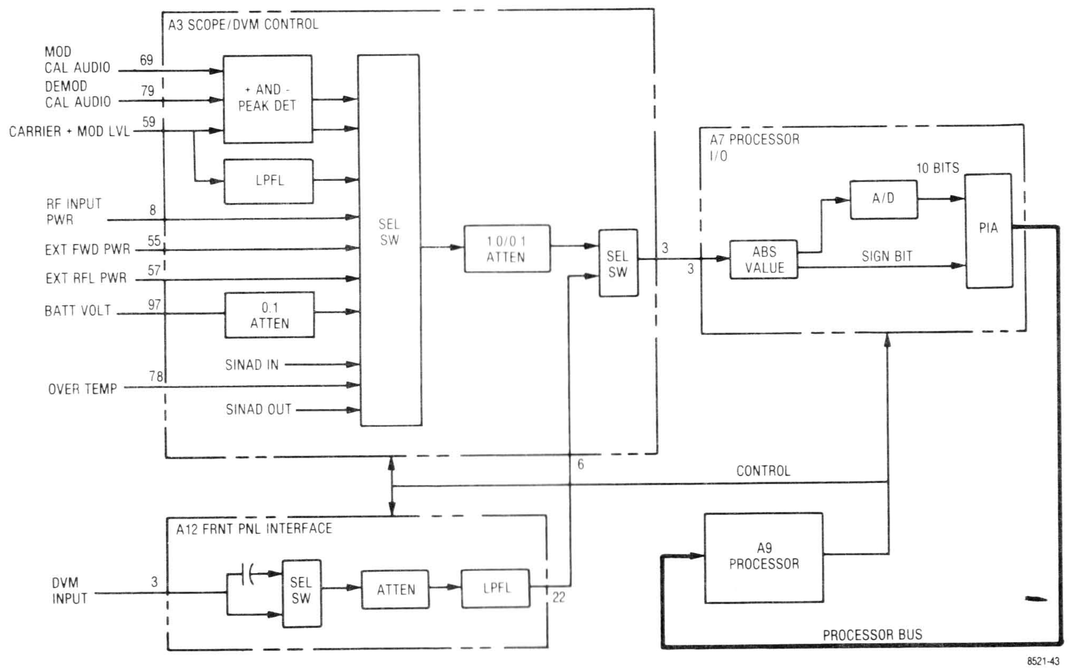

Figure 5-10. Digital Voltmeter (DVM) Block Diagram

5-73. Switching for the DVM input is contained on the Scope/DVM Control module (A3). One of ten internal measurement points may be selected for measurement. The switching action is controlled by the processor and is performed as required to obtain the information on the CRT. To keep the CRT information current, each of the required measurements are made in sequence at an approximate rate of thirty per second. The net effect is a multiplexing of the voltage information to the processor.

5-74. Two modulation signals (MOD CAL AUDIO and CARRIER + MOD LVL) and a demodulated signal (DEMOD CAL AUDIO) are made available to the peak detectors. Positive and negative peak determination of the selected signal enables the processor to determine the level of modulation.

5-75. A Lowpass Filter (LPFL) removes the DC component from the CARRIER + MOD LVL signal so that the generate RF output level can be determined. Refer to paragraph 5-30.

5-76. The RF INPUT POWER and OVERTEMP signal lines from the RF Input module provide the processor inputs for the internal wattmeter. (Paragraph 5-38). External wattmeter element inputs (EXT FWD PWR and EXT RFL PWR) from the front panel jack provide the information for the external wattmeter display.

5-77. A signal line from the DC input jack on the rear panel (BATT VOLT) is brought to the processor for battery voltage determination. The voltage is attenuated by a factor of 10 to stay with the 10 volt maximum input to the select switch. The processor uses the battery voltage measurement to warn the operator when the battery is near it's discharged state.

5-78. Sinad determination utilizes the two remaining inputs to the select switch. For a discussion on the sinad function see para 5-96.

5-79. The selected internal measurement signal is then passed through a range attenuator. Signals from the Select Switch have a 0 to +10 volt range while the DVM input has a 1 volt maximum input requirement. The processor automatically determines and sets the correct range on the attenuator so that the input level to the DVM is maintained at less than 1 volt. For levels from the select switch less than 1 volt, the attenuator is ranged to the unity gain position for maximum measurement resolution.

5-80. A select switch following the internal range attenuator gates either the internal measurement points or the external input to the DVM circuitry. External DVM inputs are applied through the front panel jack to the Front Panel Interface module (A12). On the Interface module, a processor controlled switch selects between a direct coupled or a capacitively coupled path for DC and AC measurements respectively. A range attenuator follows the AC/DC switch to provide processor controlled autoranging over a four decade range. Input voltages from 1 millivolt to 300 volt can be handled through the DVM Input.

5-81. For DC measurements a lowpass filter (LPFL) removes AC signal components. The filter provides approximately 25 dB rejection at 50 Hz so that accurate DC measurements can be made with superimposed AC line ripple. When the AC measurement mode is selected the LPFL is reprogrammed for less than 0.5 dB rejection at 10 kHz.

5-82. Positive and negative DVM input levels are full-wave rectified by the Absolute Value circuit on the Processor I/O module (A7). The outputs of the Absolute Value circuit provide a positive voltage level equal to the magnitude of the input voltage and a SIGN BIT indicating the polarity of the input signal. For AC measurements a lowpass filter is switched into the Absolute Value circuit to filter the rectified AC input for it's average level. The processor then multiplies by 1.11 to obtain the RMS value.

5-83. An analog to digital converter (A/D) converts the magnitude voltage level into a 10-bit digital word. This digital word when combined with the SIGN BIT is a binary representation of the input voltage level. The peripheral interface adapter transfers the information to the processor.

5-84. Oscilloscope

5-85. Three basic functions are provided for by the system oscilloscope. The alphanumeric and modulation displays provide operating mode and control information for the system. The external oscilloscope feature augments the total system as a general purpose test instrument. A block diagram of the oscilloscope function is shown in figure 5-11.

5-86. Drive signals for the CRT are provided by circuits on the Scope Amplifier module (A2). Horizontal and vertical signals are amplified by their respective amplifiers from 0.5 volt/division input levels to the levels required on the deflection plates. A Z-Axis Modulator circuit controls the cathode to grid bias voltage on the CRT to effect intensity control.

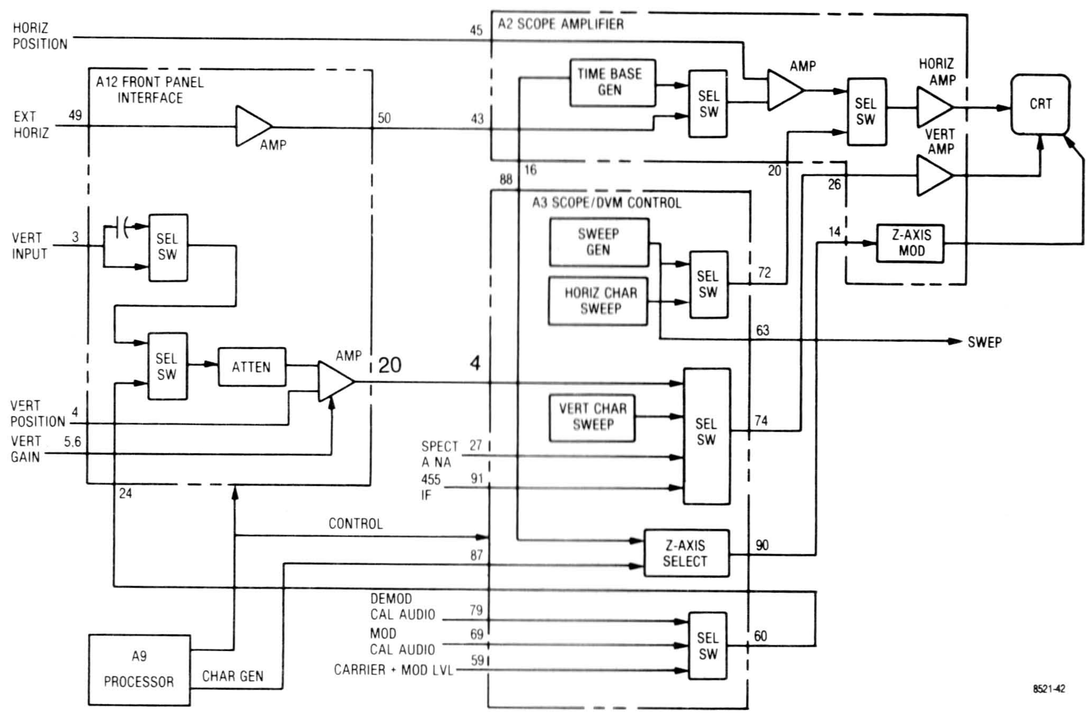

Figure 5-11. Oscilloscope Block Diagram

5-87. The horizontal amplifier input is selected between external and internal scope functions. External functions, Time base Generator or external horizontal input, are switched to a sumation amp where the HORIZONTAL POSITION signal from the front panel is added. The resulting DC offset positions the display horizontally on the CRT.

5-88. Six decade sweep ranges from 1μ sec to 100 msec per division are provided by the Time base Generator. Control of the Time base Generator is from the front panel horizontal switch through the processor.

5-89. Front panel external horizontal inputs are applied to the top of the horizontal vernier gain potentiometer. The wiper of the gain potentiometer is the EXTERNAL HORIZONTAL input signal to the

preamp on the Front Panel Interface module (A12). The preamp provides the required horizontal input sensitivity and buffers the signal to the select switch on the Scope Amplifier module.

5-90. Internal horizontal signals, Sweep Generator and Character Sweep outputs, are selected on the Scope/DVM Control module (A3). The Sweep Generator provides a sawtooth waveform to the RF Synthesizer module for the sweep generator and spectrum analyzer functions. The sweep signal to the CRT horizontal input causes the scope sweep to be synchronous with the synthesizer sweep for the spectrum and swept filter response displays.

5-91. The Horizontal Character Sweep generator output is a sawtooth waveform that provides the horizontal sweep for the raster scan character display.

5-92. One of four possible vertical signal sources are switched to the Vertical Amplifier input by a Select Switch on the Scope/DVM Control module. The 455 kHz IF and SPECTRUM ANALYZER signals from the Receiver Module provide the IF envelope and spectrum analyzer displays respectively. The Vertical Character Sweep generator gives the vertical sweep for the raster scan character display. The remaining input is the path for external vertical or modulation scope vertical inputs from the Front Panel Interface module.

5-93. A vertical preamplifier on the Interface module gives a vertical sensitivity of 10 millivolt per division and provides positioning and vernier gain capability for its input. The amplifier is preceeded by a four decade range attenuator which is controlled from the front panel vertical switch through the processor. The attenuator provides external vertical input sensitivities from 0.01 to 1.0 volt per division and modulation scope sensitivities from 0.25 to 25 kHz per division.

5-94. A Select Switch ahead of the Attenuator selects between the external vertical input or the modulation scope inputs. The External Vertical input path is further selected between AC and DC coupling before becoming the vertical input jack on the front panel. The modulation scope signal path is switched to one of three possible sources on the Scope/DVM Control module. Demodulation signals from the Receiver are selected via the DEMOD CAL AUDIO path, and frequency and amplitude modulation signals via the MOD CAL AUDIO and CARRIER + MOD LVL signal paths respectively. The Audio Synthesizer module provides the MOD CAL AUDIO signal while the RF Input module gives the CARRIER + MOD LVL signal.

5-95. A Z-Axis Select circuit on the Scope/DVM Control module gates either the CHARACTER GEN signal for character displays or the retrace blanking signal from the Time Base Generator for scope displays to the Z-Axis Modulator on the Scope Amplifier module.

5-96. Sinad Meter

5-97. Sinad, which is defined as the ratio of noise plus distortion to signal plus noise plus distortion, is a measurement of the audio quality at a receiver output. Measurement of the Sinad is implemented with a 1 kHz notch filter. For a receiver receiving a 1 kHz tone the audio output is applied to the 1 kHz notch filter. Sinad is then the ratio of the signal power at the output of the notch filter to the signal power at the input of the notch filter. A block diagram of the Sinad Meter is shown in figure 5-12.

5-98. The Sinad Input from the front panel is AC coupled to the range Attenuator on the Front Panel Interface module (A12). Processor control on the Attenuator allows a wide range of input levels to be automatically handled. The output of the Attenuator is routed to the 1 kHz Notch Filter on the Scope/DVM Control module (A3). Detectors, comprised of fullwave rectifiers and filters, on the input and output of the notch filter determine the respective power levels. The DC outputs of the detectors are read by processor through the DVM. The processor determies the ratio between the two readings and displays the Sinad.

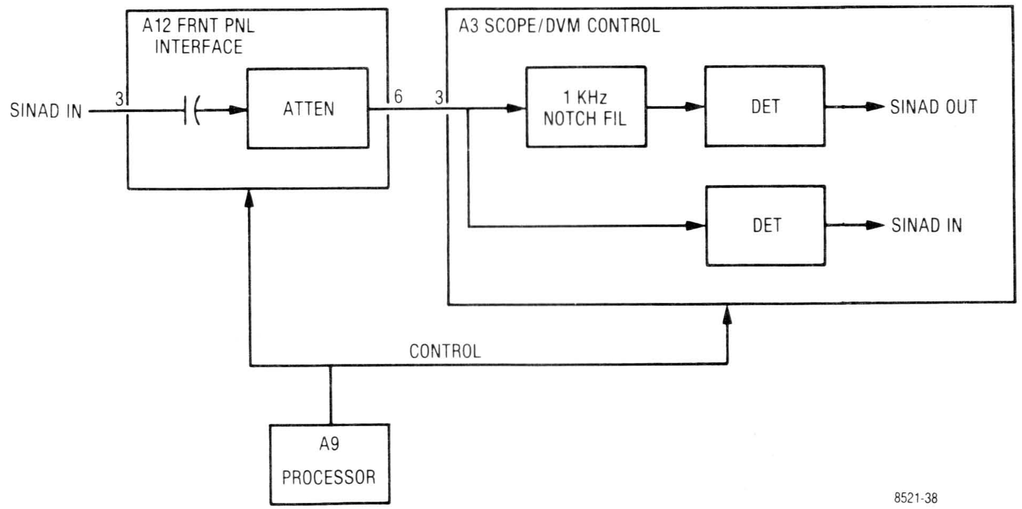

Figure 5-12. Sinad Meter Block Diagram

5-99. ALIGNMENT PROCEDURE

5-100. Introduction

5-101. This section provides a basic (para 5-105) and an extended (para 5-118) alignment procedure. The basic procedure requires only the use of a calibrated oscilloscope. It is expected that the basic alignment be performed whenever service work is performed. The extended alignment procedure requires module extenders and a calibrated digital voltmeter in addition to the oscilloscope. The extended procedure should be performed as required after servicing the system. All adjustments not covered in this procedure are to be performed on suitable module test fixtures only.

5-102. Test Equipment Required

5-103. The test equipment or its equivalent listed in table 5-3 is required for the basic procedure. The additional equipment required for the extended procedure is listed in table 5-4.

Table 5-3. Basic Test Equipment Required

Description	Model
*Oscilloscope Test Point Shorting Jumper Nonmetallic Alignment Tool	Motorola R1004A

*An R2001 is a suitable subsitute

Table 5-4. Extended Test Equipment Required

Description	Model
*Oscilloscope	Motorola R1004A
*Digital Voltmeter	Motorola R1001A
*RF Signal Generator	Motorola R1201A
*Modulation Meter	Boonton 82AD
Receiver Test Cover	Motorola 15-P01324V001
Extender Card Set	Motorola 67-P01322V001

*An R2001 is a suitable for use in place of these separate equipments.

5-104. Preparation for Alignment

1. All alignments to be performed at normal ambient temperature.
2. Remove the top cover of the unit to be aligned.
3. Apply power to the unit to be aligned and allow a warmup time of 15 minutes prior to alignment.

5-105. Basic Alignment Procedure

5-106. CRT Astigmatism and Geometry

1. Select the Monitor Function and the Gen/Mon Mtr Display on the R2001B. Set the Intensity Control for a medium intense display.
2. While using the Focus Control to maintain a focused display at the center of the CRT, adjust the Astigmatism and Geometry potentiometers (Figure 5-13) for the best focus at the outer edges of the CRT while minimizing the pincushion and barrel distortion of the display. The two adjustments are interactive so that repeated small adjustments alternated between the two potentiometers will be required to obtain the best display.

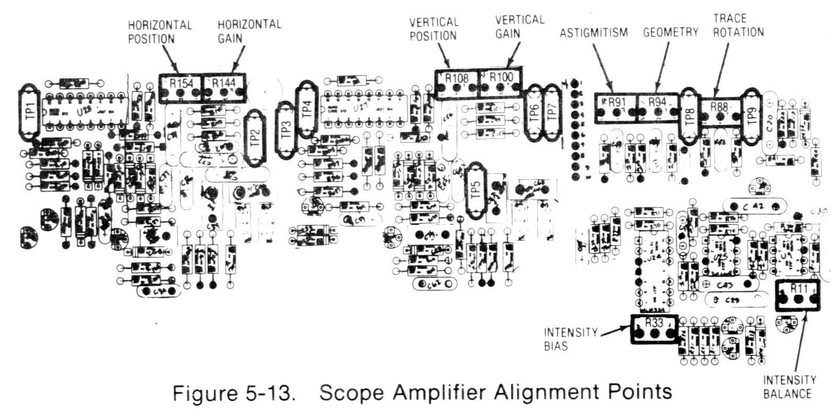

Figure 5-13. Scope Amplifier Alignment Points

-107. CRT Intensity Bias

1. Select the Scope DC Display and the Ext Horiz. Input mode. Set the Intensity Control fully counter clockwise.

CAUTION

Do not let a dot stay in one place on the CRT screen for more than 30 seconds as a permanent burn in the phosphor will occur.

2. Adjust the Intensity Bias potentiometer (Figure 5-13) until a dot appears on the screen. (The Vertical and Horizontal Position Control on the front panel may have to be used to bring the dot on to the screen.) Then back off the Intensity Bias potentiometer until the dot just disappears.

5-108. CRT Intensity Balance

1. Select the Scope DC Display and the 1 mSec/Div Horizontal Sweep rate on the R2001B. Set the Horizontal Timebase Veriner to the Cal position and adjust the Intensity Control for a barely visible horizontal line on the CRT.

2. Adjust the Intensity Balance potentiometer (Figure 5-13) for uniform intensity of the horizontal trace from left to right. The Balance potentiometer affects the intensity on the left side of the trace.

5-109. CRT Horizontal Centering

1. Select the Gen/Mon Mtr Display on the R2001B. Adjust the Intensity Control for a comfortable viewing brightness.

2. With the Test Point Shorting Jumper connect TP1 of the Scope Amplifier Board (Figure 5-13) to chassis ground.

3. Adjust the Horizontal Position Potentiometer (Figure 5-13) so that the vertical trace on the CRT screen passes through the graticule center point.

4. Remove the jumper from TP1.

5-110. CRT Vertical Centering

1. Select the Gen/Mon Mtr Display on the R2001B. Adjust the Intensity Control for comfortable viewing brightness.

2. With the Test Point Shorting Jumper connect TP4 of the Scope Amplifier Board (Figure 5-13) to chassis ground.

3. Adjust the Vertical Position Potentiometer (Figure 5-13) so that the horizontal trace on the CRT screen passes through the graticule center point.

4. Remove jumper from TP4.

5-111. CRT Trace Rotation

1. Select the Gen/Mon Mtr Display on the R2001B. Adjust the Intensity Control for a comfortable viewing brightness.

2. Adjust the Trace Rotation Potentiometer for a properly rotated CRT display.

5-112. CRT Horizontal Gain

1. Connect the Mod Out Jack to the Ext Horiz Jack on the R2001B front panel.

2. Set the R2001B for the Generate FM Function and the Scope DC Display. Set the Horiz Control for Ext Horiz input. Turn the Code Synthesizer off, the Ext Level off, and the 1 kHz Level up about half way.

3. Connect an oscilloscope with a calibrated vertical input to TP1 on the Scope Amplifier Board. (Figure 5-13).

4. Using the front panel Horizontal Vernier Control adjust for a 3 V p-p amplitude on the sinewave at TP1.

5. With 3V p-p at TP1 adjust the Horizontal Gain Potentiometer (Figure 5-13) for a horizontal trace 6 cm long on the CRT. (Use the front panel controls to position the trace at a convenient place near the center of the CRT).

5-113. CRT Vertical Gain

1. Connect the Mod Out Jack to the Vert Input Jack on the R2001B front panel.

2. Set the R2001B for the Generate FM Function and the Scope DC Display. Set the Horiz Control for 1 mSec/Div sweep rate and the Horizontal Vernier to the Cal position. Set the Vert Control for 1 V/Div input sensitivity and the Vertical Vernier to the Cal position.

3. Turn the Code Synthesizer off, the Ext Level off and the 1 kHz Level up about half way.

4. Connect an oscilloscope with a calibrated vertical input to TP4 on the Scope Amplifier Board. (Figure 5-13).

5. Using the front panel 1 kHz Level Control adjust for a 3V p-p amplitude on the sinewave at TP4.

6. With 3V p-p at TP4 adjust the Vertical Gain Potentiometer (Figure 5-13) for a 6 cm p-p sinewave on the CRT. (use the front panel Position Controls to center the waveform on the CRT).

5-114. Vertical Input Gain

1. Set the R2001B for the Generate FM Function and the Scope DC Display. Set the Horiz Control for 1 m Sec/Div sweep rate and the Horizontal Vernier to the Cal position. Set the Vert Control for 1 V/Div input sensitivity and the Vertical Vernier to the Cal position.

2. Connect an oscilloscope with a calibrated vertical input to the Mod Out Jack on the front panel.

3. Turn the Code Synthesizer off, the Ext Level off and adjust the 1 kHz Level Control for a 6 V p-p sinewave on the attached oscilloscope.

4. Disconnect the oscilloscope from the Mod Out Jack and connect the Mod Out Jack to the Vert Input Jack on the R2001B.

5. Adjust the Input Vertical Gain Potentiometer on the Front Panel Interface Board (Figure 5-14) for a 6 cm p-p sinewave on the CRT. (Use the front panel Position Controls to center the waveform on the CRT.)

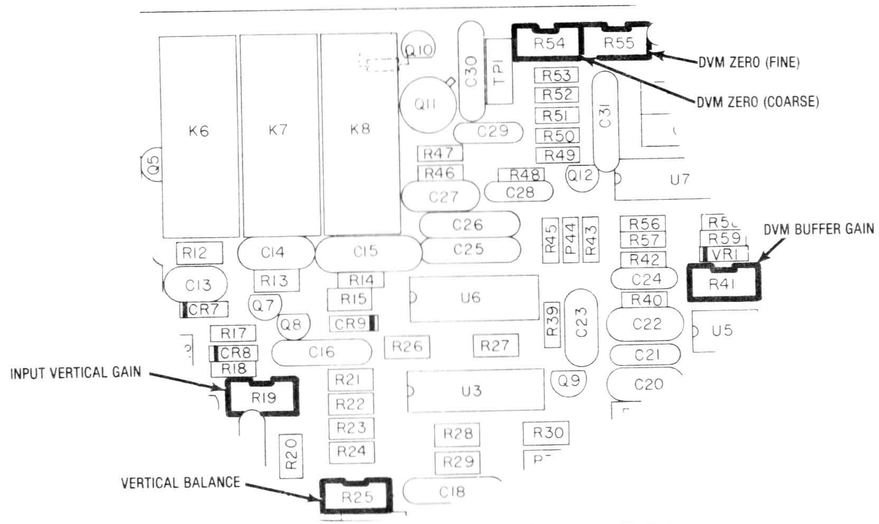

Figure 5-14. Front Panel Interface Alignment Points

5-115. DVM Zero

1. Select the DVM Display and the DC Mode on the R2001B.

2. Short the center conductor of the DVM Input Jack to ground.

3. Adjust the DVM Zero (Coarse) and the DVM Zero (Fine) Potentiometers on the Front Panel Interface Board (Figure 5-14) for a zero reading on the DVM Display.

5-116. Spectrum Analyzer Centering

1. Select the Spect Analyzer Display on the R2001B. Set the Dispersion Control on the front panel to the 1 MHz position. (full counter clockwise) Set the center frequency of the analyzer to 10.0 MHz.

2. Connect the 10 MHz Output on the rear panel to the RF Input on the front panel. Set the RF Step Attenuator to obtain a convenient spectral display.

3. Adjust the Spectrum Analyzer Centering Potentiometer on the Scope/DVM Control Board (Figure 5-15) so that the spectral line on the CRT is centered about the center graticule line.

5-117. Horizontal Time Base

1. Select the Tone Memory Display and the Generate FM Function on the R2001B. Program tone A for 20.0 Hz and Tone B for 2000.0 Hz.

2. Select the Modulation Display. Set the Oscilloscope Controls for 2.5 kHz/Div vertical range, Auto Trigger, and 10 mSec/Div horizontal sweep range. Set the Horizontal and Vertical Vernier Controls to their Cal positions.

3. Set the Code Synthesizer for Continuous, Tone A, and turn up the Code Synth Level to obtain a nearly full scale sinusoidal waveform on the CRT. Turn the Ext Level and the 1 kHz Level Controls to the off position.

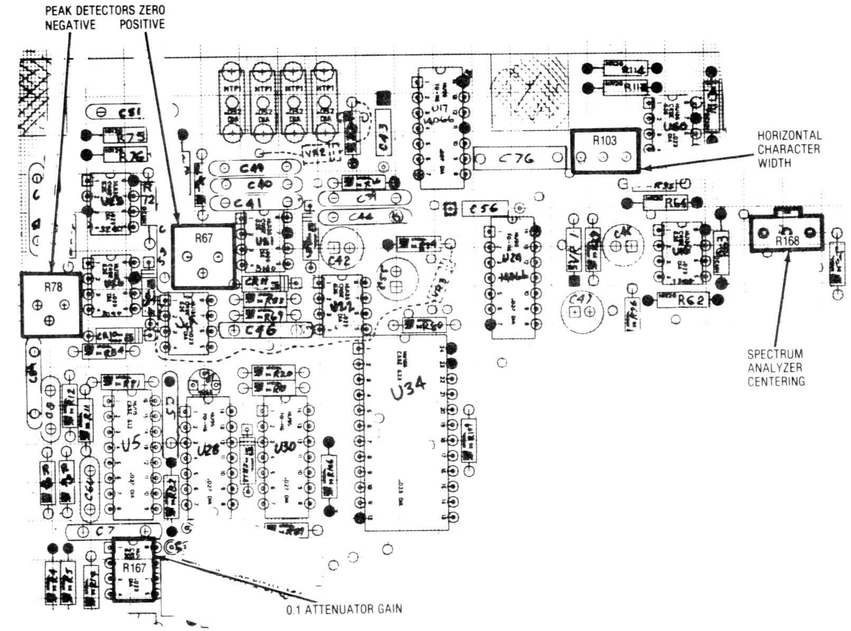

Figure 5-15. Scope/DVM Control Alignment Points

4. Adjust the Coarse Time Base Calibration Potentiometer on the Scope Amplifier Board (Figure 5-16) so that one cycle of the displayed waveform occurs in 5 cm along the horizontal axis. Use the Vertical and Horizontal Position controls to center and to move the waveform so that the 5 cm are measured in the middle of the screen to avoid nonlinearities near the edge of the CRT.

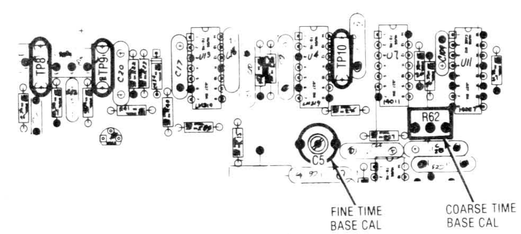

Figure 5-16. Horizontal Time Base Alignment Points

5. Set the Oscilloscope Horizontal Control for a 100 μ Sec/Div sweep rate and select the Tone B output on the Code Synthesizer.

6. Adjust the Fine Time Base Calibration Capacitor on the Scope Amplifier Board (Figure 5-16) so that one cycle of the displayed waveform occurs in 5 cm along the horizontal axis. Use the Vertical and Horizontal Position controls to center and to move the waveform so that the 5 cm are measured in the middle of the screen to avoid nonlinearities near the edge of the CRT.

5-118. Extended Alignment Procedure

5-119. DVM

1. Remove the top and bottom covers of the R2001B.

2. Connect the R2001B to a primary power source and turn it on. Allow approximatly 15 minutes warm up before proceeding with the alignment procedure.

3. Short the center conductor of the DVM Input Jack on the front panel to ground. Connect an external DVM with a floating input between pin 1 and pin 6 of J3 on the bottom side of the motherboard.

4. Adjust the Coarse and Fine DVM Zero potentiometers on the Front Panel Interface board (Figure 5-17) for a reading of 0 ±0.5 mV on the external DVM.

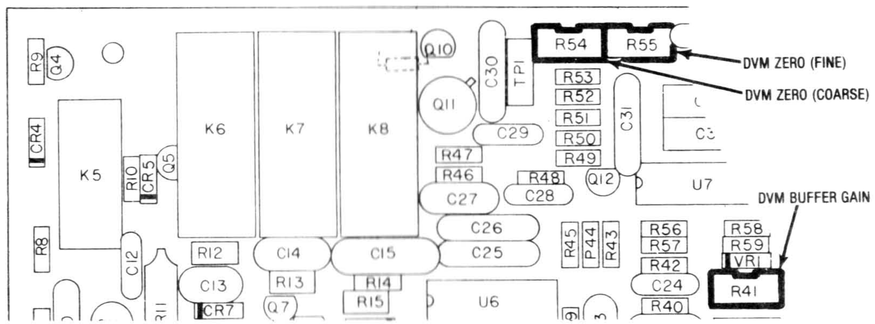

Figure 5-17. DVM Input Buffer Alignment Points

5. Remove the ground from the DVM Input and connect the DVM Input to TP 12 of the Scope/DVM Control Board. (Figure 5-18)

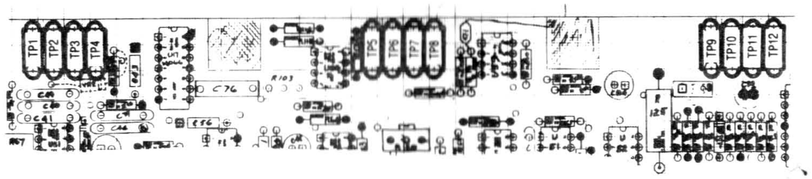

Figure 5-18. Scope/DVM Control Test Point Numbering

6. Disconnect the external DVM from pins 1 and 6 of J3 and connect it to TP 12 of the Scope/DVM Control Board and chassis ground. Note the DVM reading for TP 12.

7. Reconnect the external DVM between pin 1 and pin 6 of J3. The external DVM should show a reading equal to one-tenth the voltage at TP 12 noted in paragraph 5-119.6 plus or minus 10 mV. If the reading falls outside this range it will be necessary to physically disconnect the front panel from the chassis in order to adjust the DVM Input Gain Potentiometer on the Front Panel Interface Card (Figure 5-17). Adjust the DVM Input gain for a reading on the external DVM equal to one-tenth the voltage noted for paragraph 5-119.6. Reconnect the front panel to the chassis.

8. Repeat paragraphs 5-119.3 and 5-119.4.

9. Disconnect the external DVM. With the DVM input jack still shorted adjust the A/D Zero Potentiometer on the I/O Board (figure 5-19) for a 0.0 VDC reading on the R2001B CRT display.

CAUTION

Do not use the card extender while aligning the Processor I/O board.

10. Remove the short from the DVM Input and connect the DVM Input to TP 12 of the Scope/DVM Control Board.

11. Adjust the A/D Gain Potentiometer on the Processor I/O Board (Figure 5-19) for a DVM reading on the CRT equal to the voltage measured at TP 12 with the external DVM for paragraph 5-119.6.

12. Connect the external DVM to TP11 of the Scope/DVM Control Board and chassis ground. Note the DVM reading for TP11.

13. Disconnect he external DVM from TP11 and connect the DVM Input Jack on the front panel to TP11 of the Scope/DVM Control Board.

14. Adjust the A/D Balance Potentiometer on the Processor I/O Board (Figure 5-19) for a DVM reading on the CRT equal to the voltage measured at TP11 with the external DVM in step 13.

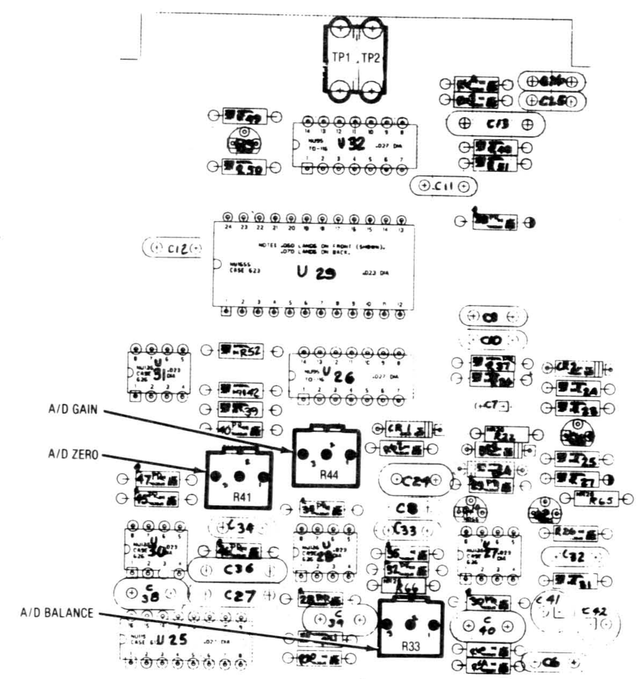

Figure 5-19. Processor I/O A/D Alignment Points

5-120. Character Generator

1. Perform the Basic Alignment Procedure of para 5-105.

2. Turn the R2001B off and extend the Scope/DVM Control Board using the 100 pin extender card.

3. Turn the R2001B on and select the Monitor FM Function and the Gen/Mon Mtr Display.

4. Adjust the Horizontal Character Sweep Width Potentiometer on the Scope/DVM Control Board (Figure 5-20) so that the right-hand edge of the CRT character display is approximately 4.2 graticule divisions to the right of the graticule center line.

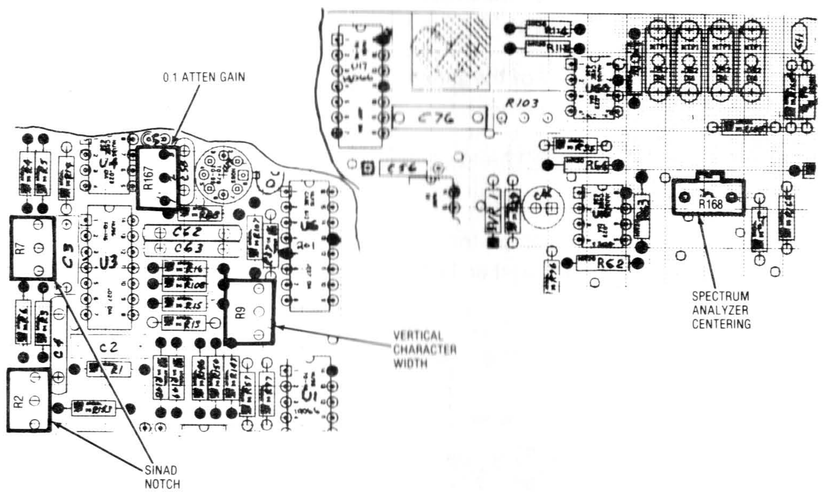

Figure 5-20. Scope/DVM Control Char Sweep and Sinad Alignment Points

5. Adjust the Vertical Character Sweep Width Potentiometer on the Scope/DVM Control Board (Figure 5-20) so that the bottom edge of the CRT display is approximately 3.3 graticule divisions below the graticule center line.

6. Turn the system power off and reinstall the Scope/DVM Control Board into the R2001B.

5-121. Sinad Notch Filter

1. Turn the R2001B off and extend the Scope/DVM Control Board using the 100 pin extender card.

2. Turn the R2001B on and select the Generate FM Function and the Gen/Mon Mtr Display.

3. Set the Modulation Switch and the Ext. Level Control to their off positions. Set the BW Switch to the Narrow position and adjust the 1 kHz Level Control for a 20 kHz deviation reading on the CRT display.

4. Connect the Mod Out Jack on the fron panel to the Vert/Sinad/DVM/Counter Input Jack on the front panel.

5. Alternately adjust the two SINAD Notch potentiometers on the Scope/DVM Control Board (Figure 5-20) for a maximum SINAD reading on the CRT display. A reading greater than 30 dB should be obtained.

6. Turn the system power off and reinstall the Scope/DVM Control Board into the R2001B.

5-122. Receiver

5-123. AM Detector

1. Perform the basic alignment procedure of para 5-105.

2. Turn the R2001B off and remove the Receiver Module. Remove the Receiver Module cover and install the Receiver Test Cover on the module housing. Extend the Receiver module on the Receiver Extender Card.

3. Turn the R2001B on and select the Monitor AM Function and the Gen/Mon Mtr Display. Set the monitor frequency to 250 MHz, the RF Step Attenuator to the 0 dB position, and the BW Switch to the Narrow position.

4. Connect the external signal generator to the RF In/Out Jack on the front panel. Adjust the external generator for an output level of approximately -60 dBm and a calibrated 30% AM.

5. Adjust R60 (Marked on the Receiver Test Cover) for a reading of 30% ±5% on the CRT AM display.

5-124. FM Detector

1. Select the Monitor FM Function and the Gen/Mon Mtr Display. Set the monitor frequency to 250 MHz, the RF Step Attenuator to the 0 dB position, and the BW Switch to the Wide position.

2. Connect the external signal generator to the RF In/Out Jack on the front panel. Adjust the external generator for a center frequency of 250 MHz at an output level of approximately -30 dBm and a calibrated 20 kHz FM.

3. Adjust R70 (Marked on the Receiver Test Cover) for a reading of 20 kHz ± 1 kHz on the CRT FM display.

4. Set the BW switch to the Narrow position and reset the FM on the external generator to 3 kHz deviation.

5. Adjust R125 (Marked on the Receiver Test Cover) for a reading of 3 kHz ± 150 Hz on the CRT FM display.

6. Turn off the FM on the external generator so that a CW signal of a level of approximately -30 dBm is applied to the R2001B.

7. Connect the Demod Out Jack to the Vert/Sinad/DVM/Counter Input Jack on the front panel. Select the DVM Display and the DC DVM Mode on the R2001B.

8. Adjust R68 (Marked on the Receiver Test Cover) for a 0.0 VDC ±100 mVDC reading on the DVM Display.

5-125. Spectrum Analyzer

1. Select the Monitor Function and the Spectrum Analyzer Display on the R2001B. Set the monitor frequency to 250 MHz, and the RF Step Attenuator to the 40 dB position.

2. Connect the external signal generator to the RF In/Out Jack on the front panel. Adjust the external generator for a center frequency of 250 MHz and a calibrated output level of -30 dBm with no modulation.

3. Adjust in succession C2, C83, C88, and C96 (Marked on the Receiver Test Cover) to maximize the amplitude of the spectral line in the center of the CRT display.

4. Adjust R124, R91, and R100 (Marked on the Receiver Test Cover) to obtain a uniform change in the spectral amplitude per 10 dB change of the RF Step Attenuator. R124 affects the level of the spectral component when in the top quarter of the screen R91 affects levels in the third quarter from the top, and R100 affects levels in the bottom quarter.

5. Adjust R119 for offset and R121 for gain so that with the step attenuator in the 0 dB Position the peak of the spectral line lies on the 30 dB line of the CRT and that successive step increases of the input attenuator move the spectral amplitude downward in 10 dB increments on the CRT. The accuracy required for any one step attenuator position is ±3 dB.

6. It will generally be necessary to repeat paragraphs 5-125.4 and 5-125.5 until the best possible accuracy is obtained.

7. Turn the power off and remove the Receiver Module and the Receiver Extender for the chassis. Remove the Test Cover from the Receiver Module and replace the module cover. Reinstall the Receiver Module into the system chassis.

5-126. CHECKOUT PROCEDURE

5-127. Introduction

5-128. This section provides a system checkout procedure. This procedure will help isolate system failures when used with the troubleshooting information in para 5-146.

5-129. Test Equipment Required

5-130. The test equipment listed in table 5-5 or its equivalent will be required to perform the checkout procedure.

Table 5-5. Test Equipment

*RF Signal Generator	Motorola R-1201A
*RF Power Meter	Motorola S-1339A
*SINAD Meter	Motorola R-1013A
*Modulation Meter	Boonton 82AD
RF Power Source	1 watt to 100 watts

*An R2001 is suitable for use in place of these separate equipments.

5-131. Procedure

5-132. Power On

1. Check that the AC input power select card is in the 120 V postion. Connect the Unit Under Test (UUT) to a 120 VAC line source with the front panel power switch off. Verify the presence of an AC indication on the front panel.

2. Set the power switch to the Standby Position. Verify the oven ready indicator is on.

3. Set the power switch to the on position. Verify that after a warm-up period a display is visible on the CRT.

5-133. Keyboard Check

1. Verify that each key has the proper effect by observing the Gen/Mon Mtr Display and entering the frequency 123.4567 MHz and the PL frequency 890. Check for proper cursor key operation.

2. Verify that the up and down display keys perform properly and that the LED at each display illuminates.

3. Verify that the up and down function keys perform properly and that the LED at each function illuminates.

4. Verify that the up and down modulation keys perform properly and that the LED at each modulation mode illuminates.

5-134. Nonvolatile Memory

1. Select some random combination of Display, Function, and Modulation Modes. Simultaneously depress both cursor keys and after a five second delay turn the system power OFF. Turn the system power back ON and verify that the same Display, Function, and Modulation Modes are present.

5-135. Modulation Capability

1. Set the UUT to the Generate FM Mode and select the Gen/Mon Mtr Display. On the Gen/Mon Mtr Display enter a DPL code of 111. Select the Oscilloscope Display and connect the Mod Out Jack to the Vert In Jack. Set the code synthesizer to the Cont PL/DPL Mode. On the scope verify the presence of a DPL waveform whose amplitude is variable with the code synthesizer level control.

2. Move the Modulation Switch from CONT to OFF and verify that a short burst of 133 Hz is output before the output stops.

3. Move the Modulation Switch to the BURST position. Verify that a 133 Hz tone is output as long as the switch is held in the BURST position.

4. Select the Tone A Continuous Mode. Verify a Tone A output on the scope and at the speaker.

5. Select the Tone Remote Mode. Verify that when the Modulation Switch is moved from OFF to BURST that a single Tone Remote Access Sequence is generated.

6. Connect a microphone to the Mic Jack. Turn up the Ext Level Control and verify that speaking into the mike causes a modulation signal to be output as observed on the scope display.

5-136. Frequency Counter

1. Set the UUT to the Gen CW Mode with an output frequency of 35 MHz at a level of 0 dBm as displayed on the Gen/Mon Mtr display. Connect the RF In/Out Jack to the Counter In Jack of the UUT. Select the Frequency Counter Display and verify a frequency reading of 35 MHz.

2. Set the UUT to the Generate FM Mode and select the Gen/Mon Mtr Display. Turn the Code Synthesizer and Ext Modulation sources OFF. Select the Narrow Band Mode and adjust the 1 kHz Level Control for a 5 kHz FM deviation reading. Connect the Mod Out Jack to the Counter Input Jack of UUT. Select the Frequency Counter Display and verify a nominal frequency reading of 1 kHz.

5-137. DVM

1. Maintaining the same conditions as in paragraph 5-136.2, select the DVM Display and the AC Mode on the display. Verify a DVM reading of 0.707 vrms ±0.04 vrms.

2. Select the DC Mode and verify a near zero volt DC reading.

5-138. Scope Mode

1. Set the UUT to the Scope AC display mode and connect the scope vertical input jack to the Mod Out Jack. Enable the internal 1 kHz modulation source. Verify the operation of each position of the vertical input range switch and the vertical vernier gain control.

2. With the same connection as in paragraph 5-138.1, verify the operation of each position of the Horizontal Control and the Horizontal timebase vernier.

3. With the Horizontal Control set to the External Mode, connect the External Horizontal jack to the Mod Out jack. Verify a horizontal line whole length is variable with the Horizontal Vernier.

4. Connect the Vert In jack to the Mod Out jack on the UUT. Set the vert and horizontal controls for a convenient display. Verify that a steady sync is obtained in either the Norm or Auto modes and that the point of triggering is adjustable with the level control. Remove the input signal and verify no horizontal sweep in the Norm mode and the presence of a horizontal sweep in the Auto mode.

5-139. SINAD Meter

1. Set the UUT for the Generate FM Function, Narrow Band Mode, and the Tone Memory Display. On the Tone Table set Tone A for 2000.0 Hz.

2. Select the Gen/Mon Mtr Display and the Tone A Cont Modulation Mode. Turn the Ext Level and the 1 kHz Level Controls OFF. Adjust the Code Synth Lvl Control for an FM deviation of 1.88 kHz as read on the CRT display.

3. Without disturbing the Code Synth Lvl Control, turn the Code Synthesizer OFF. Turn ON the 1 kHz Level Control and adjust for an FM deviation of 7.5 kHz on the CRT display.

4. Connect the Mod Out Jack to the SINAD Input Jack on the UUT. Verify a SINAD reading greater than 25 dB.

5. Set the Code Synthesizer to the Continuous Mode and verify a SINAD reading 12 dB ±1 dB.

5-140. Scan Mode

1. Set the UUT for the Gen/Mon Mtr display. Verify the proper operation of each of the RF Scan switch positions.

5-141. Generate Mode

1. Set the UUT for the Generate FM Mode at 200 MHz and select the Gen/Mon Mtr display. Verify an RF level output display on the CRT.

2. Connect the RF millivoltmeter with a 50 ohm termination to the RF In/Out Jack on the UUT. Set the RF step attenuator to the 0 dB position and adjust the Variable Level control to obtain a displayed output level of +13 dBm. Verify that the RF millivoltmeter reads +13 dBm ±2 dBm.

3. Repeat paragraph 5-141.2 except at a center frequency of 800 MHz.

4. Increase the RF Step Attenuator setting in 10 dB increments and verify that the displayed RF level decreases in 10 dB increments.

5. Set the Code Synthesizer Modulation Switch and the Ext Level Control to their respective OFF positions. Select the Narrow Band mode and adjust the 1 kHz Level Control for a 5 kHz deviation reading on the CRT display. Verify a 1 kHz tone at the speaker output.

6. Connect the Modulation Meter to the RF In/Out Jack on the UUT. Set the Modulation Meter for a deviation display of 5 kHz ±250 Hz.

7. Select the Wide Band mode on the UUT and verify that the CRT displays a deviation of 20 kHz. Also verify that the Modulation Meter shows a peak deviation of 20 kHz ±1 kHz.

8. Select the Modulation Display on the UUT and verify a peak-to-peak modulation display of 40 kHz ±2 kHz.

9. Select the Generate CW Function and verify that no modulation is present on the CRT.

10. Set the UUT for the Generate AM Function, the Gen/Mon Mtr Display, and adjust for an RF output level of 0 dBm. Adjust the 1 kHz Level Control for a 50% AM reading on the CRT. Verify that the Modulation Meter reads 50% ±10% AM.

11. Select the Modulation Display and verify a low distortion 1 kHz sinewave.

12. Set the UUT for the Generate SSB/DSBSC Function and verify a low distortion 1 kHz sinewave on the CRT.

13. Set the UUT for the Generate SWP 1-10 MHz Function and the Scope DC Display. Verify a horizontal trace and a center frequency display on the CRT.

14. Set the UUT for the Generate SWP 0.01 - 1 MHz Function and verify the same results as paragraph 5-141.13.

5-142. Power Monitor Mode

1. Set the UUT to the Power Monitor Mode. Set the RF Step Attenuator to the 30 dB position, and select the Gen/Mon Mtr Display. Connect the RF power source to the RF In/Out Jack. Key the power source and verify a correct power reading on the CRT display. Unkey the power source.

2. Set the UUT to the Monitor Function and verify that the RF Step Attenuator is in the 30 dB position. Key the RF power source and verify the presence of an audible alarm and a warning display on the CRT. Unkey the power source.

5-143. Monitor Mode

1. Set the UUT to the Monitor FM Function. Set the Squelch Control to the OFF position and verify the presence of a Sig Lvl indication and noise at the speaker. Turn the Squelch Control full on and verify the absence of a Sig Lvl indication and noise at the speaker.

2. Repeat paragraph 5-143.1 except for the AM Function.

3. Repeat paragraph 5-143.1 except for the SSB/DSBSC Function and enable the BFO. After the test turn the BFO off.

4. Select the Narrow Band FM Monitor Function at 300 MHz and set the RF Step Attenuator to the 0 dB position. Connect the RF Signal Generator to the RF In/Out Jack and the SINAD Meter to the Demod Out Jack. Set the RF Signal Generator for a center frequency of 300 MHz and for 3 kHz FM at a 1 kHz rate. Adjust the RF output level from the Signal Generator for a 10 dB reading on the SINAD Meter. Verify that the Signal Generator's level is less than -103 dBm (1.5 μ Vrms).

5. Calibrate the RF Signal Generator for 3 kHz FM at 1 kHz rate using the Modulation Meter. Set the Generator for a nominal output level of -60 dBm and connect it to the RF In/Out Jack of the UUT. Select the Gen/Mon Mtr Display and verify a monitor deviation reading of 3 kHz ±150 Hz.

6. Calibrate the RF Signal Generator for 50 kHz FM at a 1 kHz rate. Select the Wide Band Mode on the UUT and verify a reading of 50 kHz ±2.5 kHz on the CRT deviation display.

7. Calibrate the RF Signal Generator for 30% AM at a 1 kHz rate. Set the Generator for a nominal output level of -60 dBm and connect it to the RF In/Out Jack of the UUT. Select the Monitor AM Function and the Narrow Band Mode. Verify a monitor AM reading of 30% ±5%.

8. Monitor the % AM Displayed on the CRT while increasing the RF level out of the Signal Generator. Verify that the IF Overload Warning occurs before the displayed AM exceeds a reading of 30% ±5%.

9. Select the Modulation Display on the UUT and verify the presence of the received modulation signal.

10. Select the Gen/Mon Mtr Display and the Wide Band Mode on the UUT. Vary the center frequency on either the UUT or the Signal Generator and verify that the Frequency Error Display properly represents the difference between the UUT's Center frequency and the Signal Generator's center frequency.

11. Select the IF Display on the UUT and verify the presence of an IF envelope on the CRT.

5-144. Spectrum Analyzer

1. Set the UUT for the Monitor Function of 300 MHz the Spectrum Analyzer Display, and 0 dB input attenuation. Set at 300 MHz. Connect the Signal Generator to the RF In/Out Jack on the UUT. Verify a spectral amplitude of -30 dBm ±5 dB on the CRT display. Increase the RF Step Attenuator in 10 dB increments verifying that the spectral amplitude decreases by 10 dB ±3 dB with each step.

2. Verify the operation of the Dispersion Control.

5-145. Duplex Generator

1. Select the Duplex Generator Display and the monitor Function at a frequency of 100 MHz. Enable the 45 MHz offset frequency. For an Image Low switch position verify that a displayed duplex frequency of 55 MHz can be obtained. Set the Image Switch to the HIGH position and verify a duplex frequency display of 145 MHz.

2. Enable the 0 - 10 MHz offset frequency and verify that displayed duplex frequencies from 100 MHz to 110 MHz can be obtained.

3. Set the UUT to the Generate Function with the Duplex Generator Display. With the Code Synthesizer and the External Modulation sources OFF, adjust the 1 kHz Level Control for a 20 kHz FM deviation reading on the CRT. Select the Monitor Function and adjust the offset frequency for a duplex output of 100 MHz. Connect the Duplex Output Jack to the RF In/Out Jack and verify a 20 kHz ±1 kHz FM deviation reading on the CRT.

5-146. System Troubleshooting

5-147. A troubleshooting procedure is outlined in Table 5-6. Because of the complexity of the system the table covers only the major failures and provides only a guide to the most probable failed module. When using the table it is important to use the checkout procedure at paragraph 5-126 to determine the fault. The troubleshooting table assumes that all tests prior to the failure point have been successfully completed and thus the applicable circuits are okay.

5-148. A list of the system test points and their functions are provided in Table 5-7. Test points are identified on the block diagrams for the Theory of Operation discussion of paragraph 5-16 and for the Module Descriptions to aid in troubleshooting.

Table 5-6. System Troubleshooting

Test Paragraph	Fault	Troubleshooting Procedure
5-132	No AC indication	1. Check AC linecord and line fuse. 2. If system powers up normally when on, Replace AC LED.
5-132	No Oven Ready indication	1. Check for approximately +15 VDC at E13 of the A13 module. If not present replace the Low Voltage Power Supply (A1). 2. Check E11 of A13 for +9 VDC and E12 for approximately +7.5 VDC. If E11 is okay and E12 is 0 VDC, replace the LED. If the +9 VDC is not present on E11 replace A13.

Table 5-6. System Troubleshooting (Cont)

Test Paragraph	Fault	Troubleshooting Procedure
5-132	System won't turn on	1. Disconnect the high voltage supply from the low voltage supply at A10P1. Check for nominal voltages of 15 VDC at pin 3 of U2 on the low voltage supply and for +12 VDC at pin 8. If either voltage is not present replace the low voltage supply (A1). 2. Reconnect the low voltage/high voltage interface and check for a nominal +9 VDC on the collectors of Q3 and Q4. (The actual signal on the collectors is a 0 VDC to +18 VDC square wave). If 9 volts is not present replace the high voltage supply (A10). 3. If items 1 and 2 check okay replace the low voltage supply (A1).
5-132	System turns on, but no display on the CRT for any display mode	1. Check for presence of high voltage by disconnecting the CRT anode lead and arcing it to the chassis. If no arc, replace the high voltage supply. 2. If the high voltage supply is okay, replace the CRT.
5-133	More than one key is inoperative or has the wrong effect	1. Replace the Processor Module (A9).
5-133	Only one key is inoperative	1. Replace the defective key switch.
5-134	Any part of the nonvolatile memory fails to remember	1. Replace the Processor module (A9).
5-135	No DPL (modulation) signal on CRT	1. Check TP1 of the Audio Synthesizer for the presence of the DPL signal. If not present replace the Audio Synthesizer module. 2. Check for the DPL signal on pin 64 of the Audio Synthesizer. If not present replace the IEEE Interface module (A8), or check for the presence of the jumpers on J8 for the standard unit.

Table 5-6. System Troubleshooting (Cont)

Test Paragraph	Fault	Troubleshooting Procedure
		3. Check for the DPL signal at TP6 of the Audio Synthesizer. If not present replace the Audio Synthesizer (A6). 4. Check for the DPL signal at TP4 of the Scope Amplifier module (A2). If not present replace the Scope/DVM control module (A3). 5. If signal switching is okay to the Scope Amplifier module proceed to the scope troubleshooting information.
5-135	No external modulation on the CRT	1. Check for modulation signal at TP7 of the Audio Synthesizer module (A6). If not present replace the Audio Synthesizer module. 2. Check for the modulation signal on pin 66 of the Audio Synthesizer. If not present replace the IEEE Interface module (A8), or check for the presence of the modulation jumpers on J8 for the standard unit. 3. Continue troubleshooting at step 3 of the "no DPL signal on the CRT".
5-136	Frequency Counter inoperative	1. Check for presence of a 1 kHz signal at TP9 of the Audio Synthesizer (A6). If not present check for the 10 MHz signal from the Frequency Standard module (A13) to the RF Synthesizer (A5). If present replace the RF Synthesizer. If not present replace the Frequency Standard module. 2. If the 1 kHz signal is present check for the presence of the signal to be counted at pins 61 and 63 of the Processor I/O module (A7). If not present replace the Front Panel Interface Module (A12). 3. If signal is okay up to the Processor I/O module replace the Processor I/O module.
5-137	DVM AC mode is inoperative	1. Check for DVM signal at pin 22 of Processor Interface module (A12). If not present replace the Front Panel Interface module. 2. Check for short bursts of the DVM AC signal at TP8 of the Scope/DVM Control module (A3).

Table 5-6. System Troubleshooting (Cont)

Test Paragraph	Fault	Troubleshooting Procedure
		NOTE The DVM AC signal from the external input is multiplexed with the other signals to be measured. Thus only short bursts of the input signal will be observed at TP8. If signal is not present at TP8 replace the Scope/DVM Control module. 3. If the signal is okay to TP8 of A3, replace the Processor I/O module (A7).
5-137	DVM DC mode is inoperative	1. Check for the DC input level attenuated by factors of 10 to less than 1 volt at pin 22 of the Front Panel Interface module (A12). If not present or if greater than 1 volt, replace the Front Panel Interface module. 2. If the signal is okay from A12, switch to the AC mode and apply an AC signal to the DVM input. Proceed from step 2 under DVM AC mode inoperative.
5-138	No horizontal sweep	1. Check for a voltage level between -2.0 VDC and +2.0 VDC at TP4 of the Scope Amplifier module (A2). If the voltage cannot be brought within range with either the vertical range attenuator or the vertical position control replace the Front Panel Interface module (A12). 2. If the voltage at TP4 is okay replace the Scope Amplifier module (A2).
5-138	No vertical display	1. Check for the input signal at TP4 of the Scope Amplifier module (A2). If not present replace the Front Panel Interface module (A12). 2. If signal is okay at TP4 replace the Scope Amplifier module.
5-138	No vertical sync	1. Check for the presence of sync pulses at pin 12 of the Scope/DVM Control module (A3) and for a nominal zero volt sync present level at pin 76. If either signal is not present replace the Scope/DVM Control module.

Table 5-6. System Troubleshooting (Cont)

Test Paragraph	Fault	Troubleshooting Procedure.
		2. If sync pulse and the syn present lines are okay replace the Scope Amplifier module (A2).
5-139	SINAD meter inoperative	1. If the DVM mode checks okay replace the Scope/DVM Control module (A3). 2. If the DVM mode does not check okay go to the troubleshooting list for DVM AC inoperative.
5-141	No generate output	1. Remove the RF cable between the RF Synthesizer (A5) and the RF Input module (A11). Check for a nominal -10 dBm level at the Synthesizer output. If no output replace the RF Synthesizer. 2. If the Synthesizer output is okay replace the RF input module.
5-141	No Frequency Modulation	1. Check for modulation signal at pin 56 of the RF Synthesizer (A5). If the signal is okay replace the RF Synthesizer. 2. If the modulation signal is not present proceed to the troubleshooting list under "no DPL (modulation) signal on CRT".
5-142	Internal wattmeter in error	1. Replace RF input module (A11).
5-143	No monitor function	1. Apply a 10.7 MHz modulated carrier to the RF input. Check for normal receiver operation except reduced sensitivity. If receiver is not working replace the Receiver module (A4). 2. If the receiver checks okay and the generate function is okay, replace the RF Input module (A11).
5-143	Monitor frequency error display is missing	1. Go to the troubleshooting list under "frequency counter inoperative".
5-143	Monitor frequency error is in error	1. Check for presence of IF signal at pin 91 of the Scope/DVM Control module (A3). If not present replace the Receiver module (A4). 2. If the IF signal is present replace the Scope/DVM Control module.

Table 5-6. System Troubleshooting (Cont)

Test Paragraph	Fault	Troubleshooting Procedure
5-144	No spectrum analyzer sweep	1. Check pin 6 of the RF Synthesizer module (A5) for a 50 Hz square wave. If not present replace the RF Synthesizer module. 2. If 50 Hz signal is present replace the Scope/DVM Control module (A3).
5-144	Spectrum display is in error	1. Replace the Receiver module (A4).
5-145	No duplex output	1. Replace the RF Input module (A11).

Table 5-7. Test Point Identification

All test points are located near the top edge of the card and counted from left to right when facing the component side of the card.

Module	Test Point No.	Signal Name
A1		
Low Voltage		
Power Supply		
A1A1	101	Pulse Width Mod Out
	102	Pulse Width Mod Dr
	103	HV Source Voltage
A1A2	201	Ground
	202	+5V FB
	203	-5V
	204	+12V
	205	-12V
	206	+33V
	207	+110V
	208	-110V
A1A3		
Control Board	301	+8V
	302	PWM Dr
	303	Error Voltage
	304	H.V. Bias Supply Voltage
	305	Sawtooth Voltage
	306	Chopper DR A
	307	Chopper DR B

Table 5-7. Test Point Identification

Module	Test Point No.	Signal Name
A1A4		
Relay Assembly	401	Batt Chg
	402	Freqency Std Sup Voltage
	403	Relay +12V
	404	Dc Bus
A2	1	Int Horiz Input
Scope Amplifier	2	Horizontal Deflection Plate
	3	$\overline{\text{Horizontal Deflection Plate}}$
	4	Vertical Drive
	5	Focus TV
	6	Vertical Deflection Plate
	7	$\overline{\text{Vertical Deflection Plate}}$
	8	CRT Z-Axis
	9	Intensity TV
	10	Time Base Output
A3	1	Vertical Character Sync
Scope/DVM	2	Negative Peak Detector Output
Control	3	Gen Carrier Plus AM Level
	4	Positive Peak Detector Output
	5	Demodulated Calibrated Audio
	6	Not Used
	7	Ground
	8	Multiplexed A/D Signal
	9	Character Generator Reset
	10	Ground
	11	-8 VDC
	12	+8 VDC
A6	1	Synth/DPL Audio
Audio Synthesizer	2	DPL Clock
	3	Unfiltered DPL

Table 5-7. Test Point Identification (Cont)

Module	Test Point No.	Signal Name
	4	Synth. D/A Output
	5	Ground
	6	Composite Modulation Audio
	7	Composite External Mod. Audio
	8	Synthesizer Clock 104, 857.6 Hz
	9	1 kHz Modulation Source
A7 Processor I/O	1	A/D Input
	2	Unfiltered 10.245 MHz T.V.
	3	DVM/Freq. Counter Select
	4	Frequency Counter Input
	5	Not Used
A9 Processor	1	Ground
	2	Dot Clock
	3	Character Row Clock
	4	Character Clock
	5	Enable
	6	Character Line Clock
	7	R/W Select
	8	Char. Gen/Processor Select
A12 Front Panel Interface	1	Attenuator Buffer Output

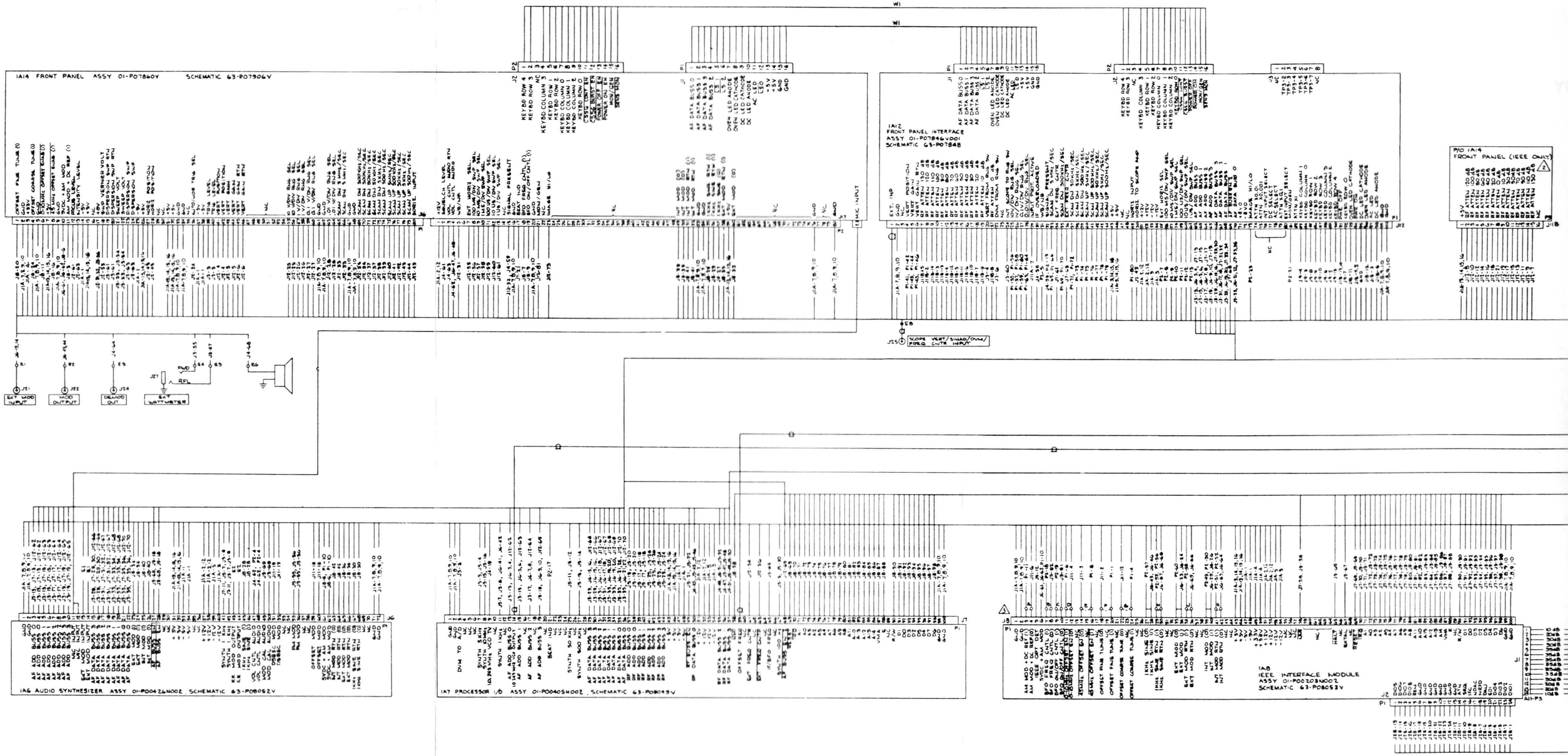

Figure 6-1. Communications System Analyzer Interconnection Diagram (Sheet 1 of 2)

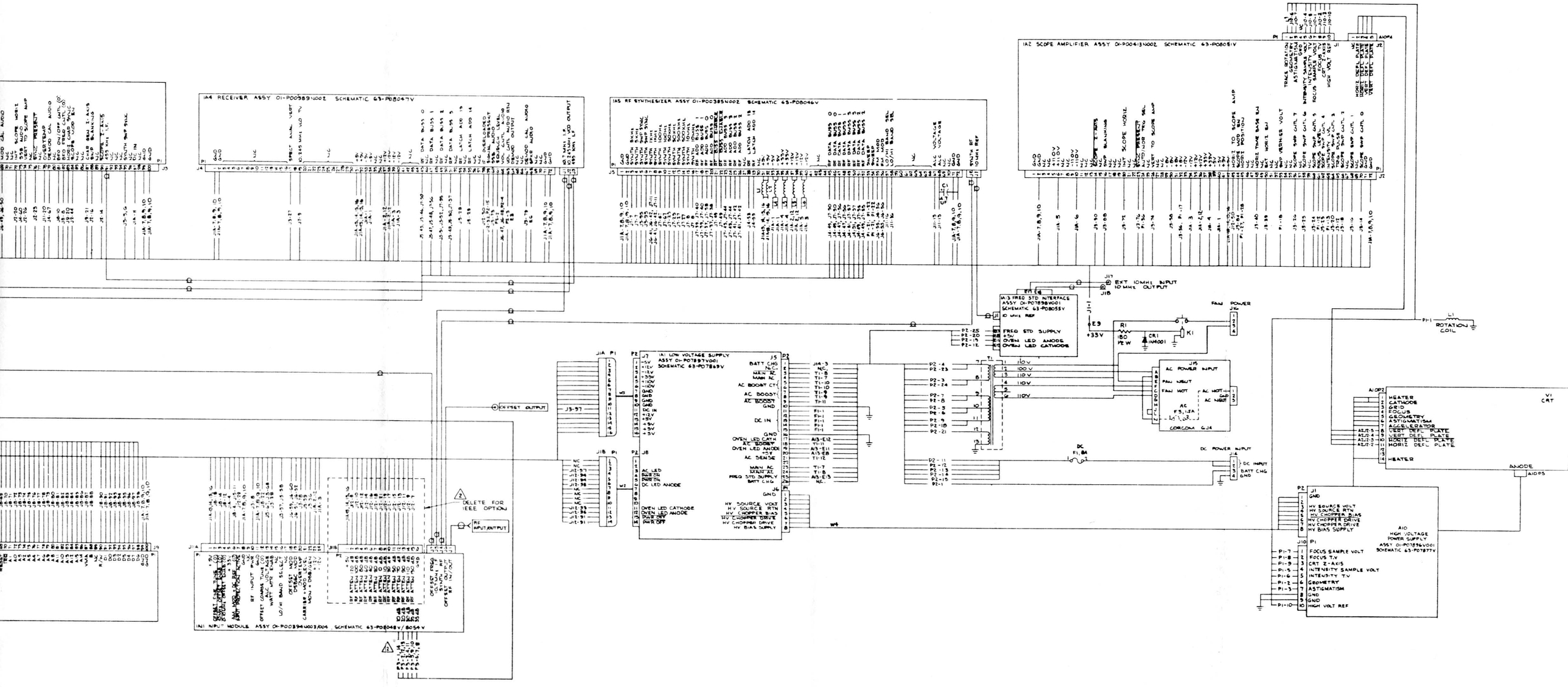

Figure 6-1. Communications System Analyzer Interconnection Diagram (Sheet 2 of 2)

NOTES:

1. THIS DIAGRAM APPLIES TO COMMUNICATION SYSTEM ANALYZER PART NUMBER 01-P07901V. FOR MATRIX OF CONFIGURATIONS SEE 00-P04134T

2. APPLIES TO UNITS WITH IEEE OPTION ONLY. FOR REFERENCE DRAWINGS SEE: 01-P07901V003, 01-P07901V004

3. JUMPERS A,B,C,D,E,F,G,H,J,K NOT INSTALLED WITH IEEE OPTION.

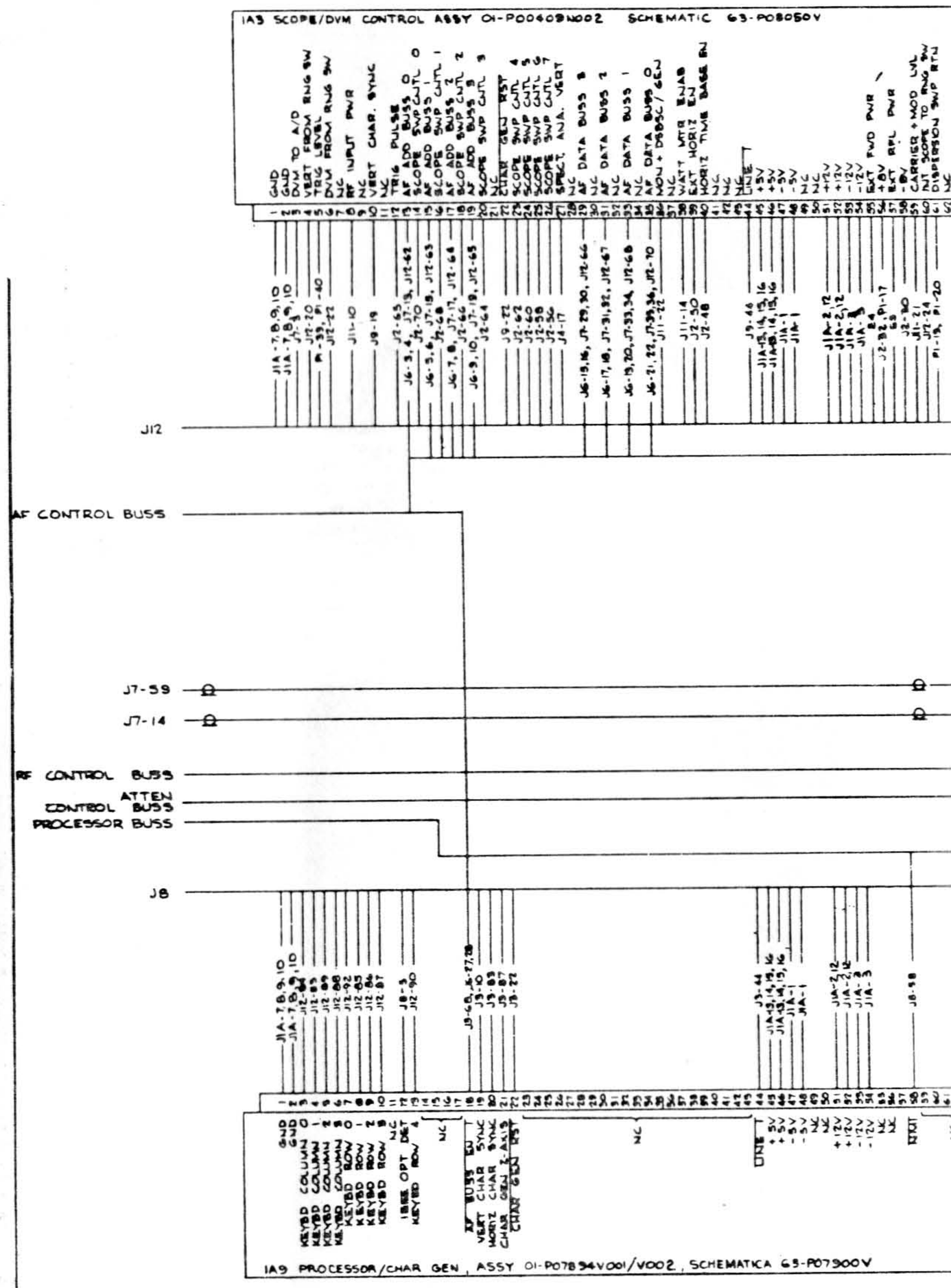

Find No.	Qty. Req.	Part No.	Nomenclature	Part Value
002	1	15-80331A62	COVER,SYSTEM,TOP	
003	1	15-80331A63	COVER,SYSTEM,BOTTEM	
004	1	55-80335A58	HANDLE, BAIL	
005	1	55-80335A73	HANDLE,BAIL	
009	1	MS24693-S24	SCREW,FL HD	.138-32X.250
010	1	55-80335A72	HANDLE,MOLDED	
012	2	15-80331A65	COVER,HANDLE	
016	1	1-80304A52	FRONT COVER ASSY	
030	26	03-P07961V009	SCREW,PH ASSEMBLED WA	6-32X.312
042	2	MS24693-C49	SCREW	8-32X.438
045	1	58-84300A98	CONN,ADAPTER	N-BNC
049	AR	11D84308A11	PAINT	SHADOW BRONZE
060	1	33-P07987V001	LABEL,PATENT	
A 002	1	RTC-4007B	SCOPE HORZ/VERT AMPLS	
A 003	1	RTC-4008B	SCOPE/DVM CONTROL BD	
A 004	1	RTL-1002B	RECEIVER ASSY A4	
A 005	1	RTC-1001B	SYNTHESIZER A5	
A 006	1	RTC-4011B	AUDIO SYNTHESIZER A6	
A 007	1	RTC-4012B	PROCESSOR I/O A7	
A 008	1	84-P01315V001	INTERCONNECTION A8	
A 009	1	RTC-4019A	MICRO PROC CHAR GEN A	

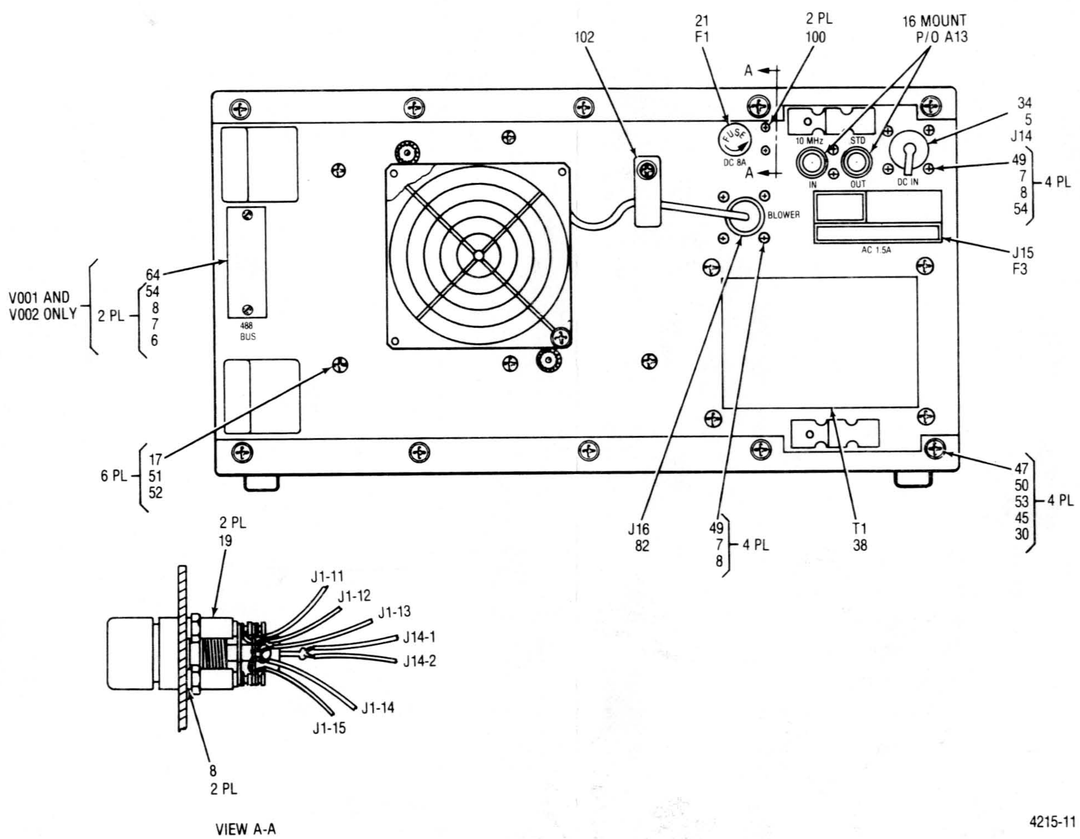

Communications System Analyzer, Rear Panel

Figure 6-3. Communications System Analyzer Parts Location Diagram

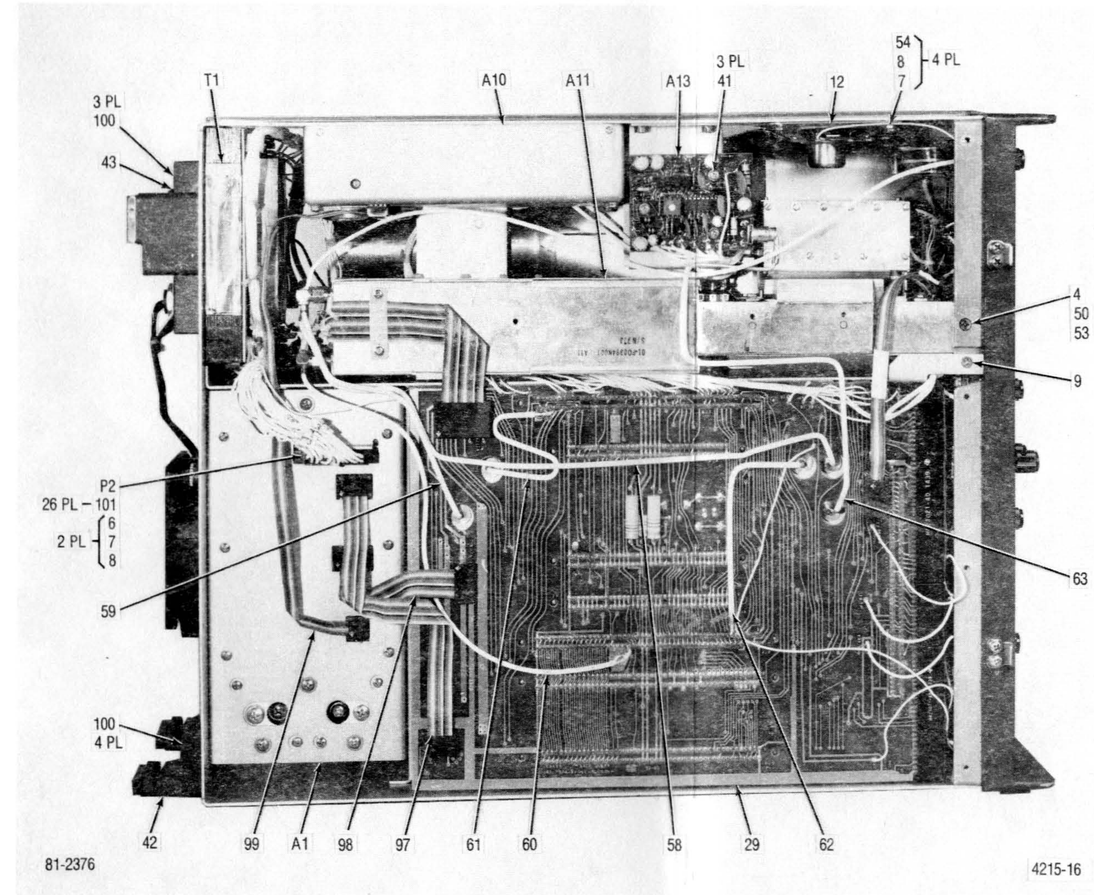

Communications System Analyzer, Bottom View

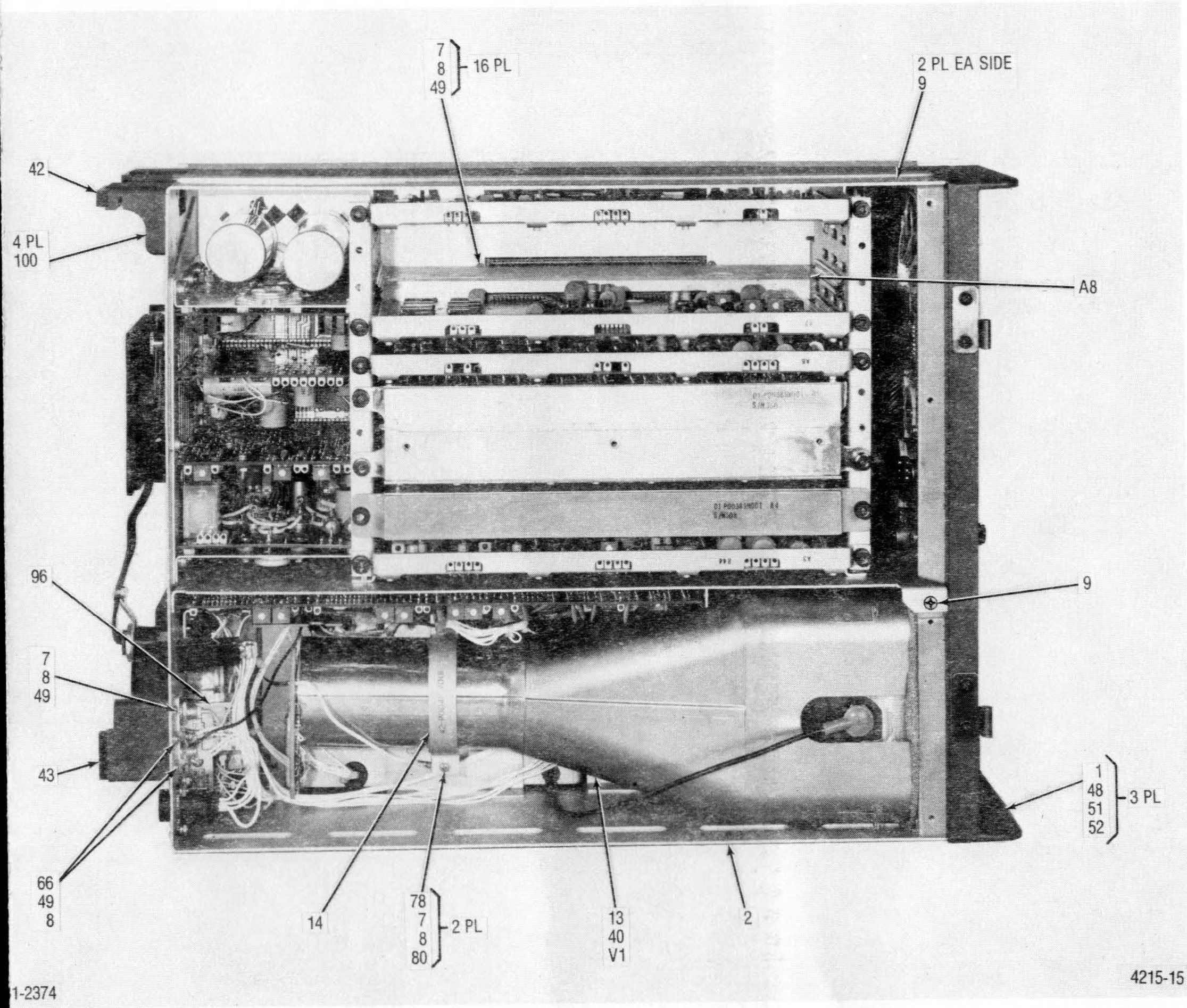

Communications System Analyzer, Top View

Find No.	Qty. Req.	Part No.	Nomenclature	Part Value
001	1	1-80305A64	FRONT PANEL ASSEMBLY	
002	1	27-P07884V001	CHASSIS, SYSTEM	
003	8	03-P07961V009	SCREW,PH ASSEMBLED WA	6-32X.312
004	2	MS35206-226	SCREW,PH	6-32X.250
005	3	66602-1	CONTACT,PIN	
009	5	MS24693-S24	SCREW,FLHD	6-32X1/4
010	AR		WIRE	22 WHT
011	AR	SN63WRMAP3	SOLDER	
012	1	50D83205B03	SPEAKER	
013	1	26-P07967V001	SHIELD,CRT	
014	1	42-80335A49	BRACKET,CRT SHIELD	
016	2	3-134169	SCREW,THD FORMING	
017	6	3-80335A98	SCREW,PH BLACK	.1380-32X.375
018	AR	MS3367-4-9	STRAP	NATURAL
019	2	SE205D01S	TERMINAL,INSULATED	
020	2	MS35206-216	SCREW,PH	.1120-40X.438
021	1	9-80331A93	FUSEHOLDER	
022	AR	3738	ADHESIVE,CARTRIDGE	.45X12.0
029	1	RTL-4089A	MOTHERBOARD ASSEMBLY	
030	4	MS35649-262	NUT,HEX	.1380-32
034	1	38-80370A52	SEALING CAP	
038	1	15-P07880V001	COVER,TRANSFORMER	
040	1	75-80335A51	ISOLATOR, CRT,BOTTOM,	
041	3	3-80335A96	SCREW,FH BLACK	6-32X.375
042	2	42-80331A46	FOOT,BATTERY HOLDER	
043	2	42-80331A47	FOOT,BATTERY HOLDER,L	
045	4	5608-50	WASHER,SHOULDER-TEFLO	
047	4	MS35206-235	SCREW	.1380-32X1.250
048	3	3-80335A97	SCREW,PH BLACK	6-32X.312
049	29	MS35206-215	SCREW	4-40X.375
050	8	MS27183-5	WASHER,FLAT	NO.6
051	9	4-80335A99	WASHER,FLAT BLACK	NO.6
052	6	4-80346A64	WASHER,LOCK BLACK	NO.6
053	11	MS35338-41	WASHER,LOCK	NO.6
054	10	MS35649-242	NUT,HEX	4-40
057	2	64-P00301N001	PLATE,THREADED	
058	1	1-80304A46	CABLE ASSEMBLY A11/A4	10.7 MHZ,IF
059	1	1-80304A47	CABLE ASSEMBLY,SYNTH	A5/A11
060	1	1-80304A48	CABLE ASSEMBLY,OFFSET	A11/MOTHERBOARD
061	1	1-80304A49	CABLE ASSEMBLY 455KHZ	A4/MOTHERBOARD
062	1	1-80304A50	CABLE ASSEMBLY 10.245	A4/MOTHERBOARD
063	1	1-80304A51	CABLE ASSEMBLY 10MHZ	A13/A4
064	1	64-P06810R001	PLATE,CONNECTOR,BLANK	
065	AR		WIRE,SOLID BUS	16
066	3	29-15159A03	TERMINAL,LUG	
068	AR		WIRE	16 WHT
070	AR	M23053/5-103-9	INSULATION SLEEVING	.093 WHT
071	AR		WIRE	20 WHT
072	AR		TAPE	NATURAL
073	AR		WIRE	24 WHT

Find No.	Qty. Req.	Part No.	Nomenclature	Part Value
074	AR		INSULATION TAPE,MYLAR	1IN YELLOW
076	AR		COMPOUND,THD LKG,BLUETYPE II,GR N,242	
077	1	MS35489-9	GROMMET	
078	2	MS35206-213	SCREW,PH	4-40X.250
079	AR		ENCAPSULANT SILICONE	
080	1	32-P04135T001	PAD,CRT CLAMP	
081	AR		WIRE	20
082	2	66105-4	SOCKET	
083	2	MS35206-232	SCREW	6-32X.75
084	2	9226-A-140-10A	SPACER	.250D X .38L
085	3	33-14232A09	IDENTIFICATION PLATE	HIGH VOLTAGE
087	AR		WIRE	18 WHT
096	1	1-80305A54	RELAY ASSEMBLY	
097	1	1-80305A57	CABLE ASSEMBLY,RIBBON	
098	1	1-80305A59	CABLE ASSEMBLY,RIBBON	
099	1	1-80305A58	CABLE ASSEMBLY,RIBBON	
100	13	MS24693-S2	SCREW,FH	.112-40X.250
101	25	87666-2	CONTACT,RECEPTACLE	
102	1	42-80370A53	CLIP,FLEX NYLON	
105	1	66103-2	CONTACT,PIN	22
106	1	87077-2	PLUG,KEYING	
107	1	1-80305A53	FAN ASSEMBLY	
108	2	9070-NP	THUMB NUT,RD HD	
109	2	476155	CLIP,MOUNTING	
110	2	55-80335A89	HINGE	
111	2	55-80331A85	STRIKE,CATCH	
112	1	61-80331A44	WINDOW,EMI	
113	1	61-80331A42	CRT,GRATICLE	
114	1	26-P08059V001	SHIELD,FRONT,CRT	
115	AR	M23053/5-104-C	INSULATION SLEEVING	.125 CLR
116	AR	MS3367-4-9	STRAP,TIEDOWN	
A 001	1	RTP-1005A	LOW VOLTAGE PWR SUPPL	A1
A 010	1	RTP-1006A	HIGH VOLTAGE PWR SUPP	A10
A 011	1	RTC-1002B	RF FRONT END	A11
A 012	1	RTL-4086A	FRT PANEL INTRF ASSY	
A 013	1	RTL-1011A	FREQUENCY STANDARD IN	A13
F 001	1	F03A250V8A	FUSE	250V-8A
F 003	1	F02A250V1-1/2A	FUSE,CARTRIDGE	250V-1 1/2A
J 002	1	MP-0100-36-DP-2	CONNECTOR	
J 010	1	MP-0100-10-DP-3	CONNECTOR	
J 014	1	206061-1	CONNECTOR,BATTERY	4-PIN MALE
J 015	1	28-80346A45	CONNECTOR	POWER INPUT
J 016	1	9-80346A46	CONNECTOR,BLOWER	4 CONTACT
P 001	1	1-640440-0	CONNECTOR	10 PIN
P 002	1	87483-6	CONTACT HOUSING-WIRE	
T 001	1	25-80369A11	TRANSFORMER, LINE	
V 001	1	96-80331A38	CATHODE RAY TUBE	
001	1	1-80305A64	FRONT PANEL ASSEMBLY	

Figure 6-3. Communications System Analyzer Parts Location Diagram

Find No.	Qty. Req.	Part No.	Nomenclature	Part Value
001	1	07-P07915V001	BRACKET, MOUNTING RELA	
002	2	29-15095A53	TERMINAL, STUD TEFLON	
003	1	MS77070-1	TERMINAL	
004	AR	SN63WRMAP3	SOLDER	
005	AR	MIL-W-16878/4	WIRE	#22 WHT
006	AR	11-14167A01	INK	BLACK
007	2	MS35206-215	SCREW, PH	4-40X,375
008	2	MS35338-40	WASHER, LOCK	NO. 4
009	2	MS27183-4	WASHER, FLAT	NO. 4
010	2	NAS671-4	NUT, HEX, LIGHT	4-40
011	AR		WIRE	#24
012	AR	MIL-I-22129	INSULATION SLEEVING	#22 WHT TEF
CR001	1	1N4001	DIODE	
K 001	1	M39016/6-104L	RELAY	
R 001	1	RCR20G181JS	RESISTOR	180-5-1/2
001	1	84-P07842V001	PWB SWITCH INTERCONNE	

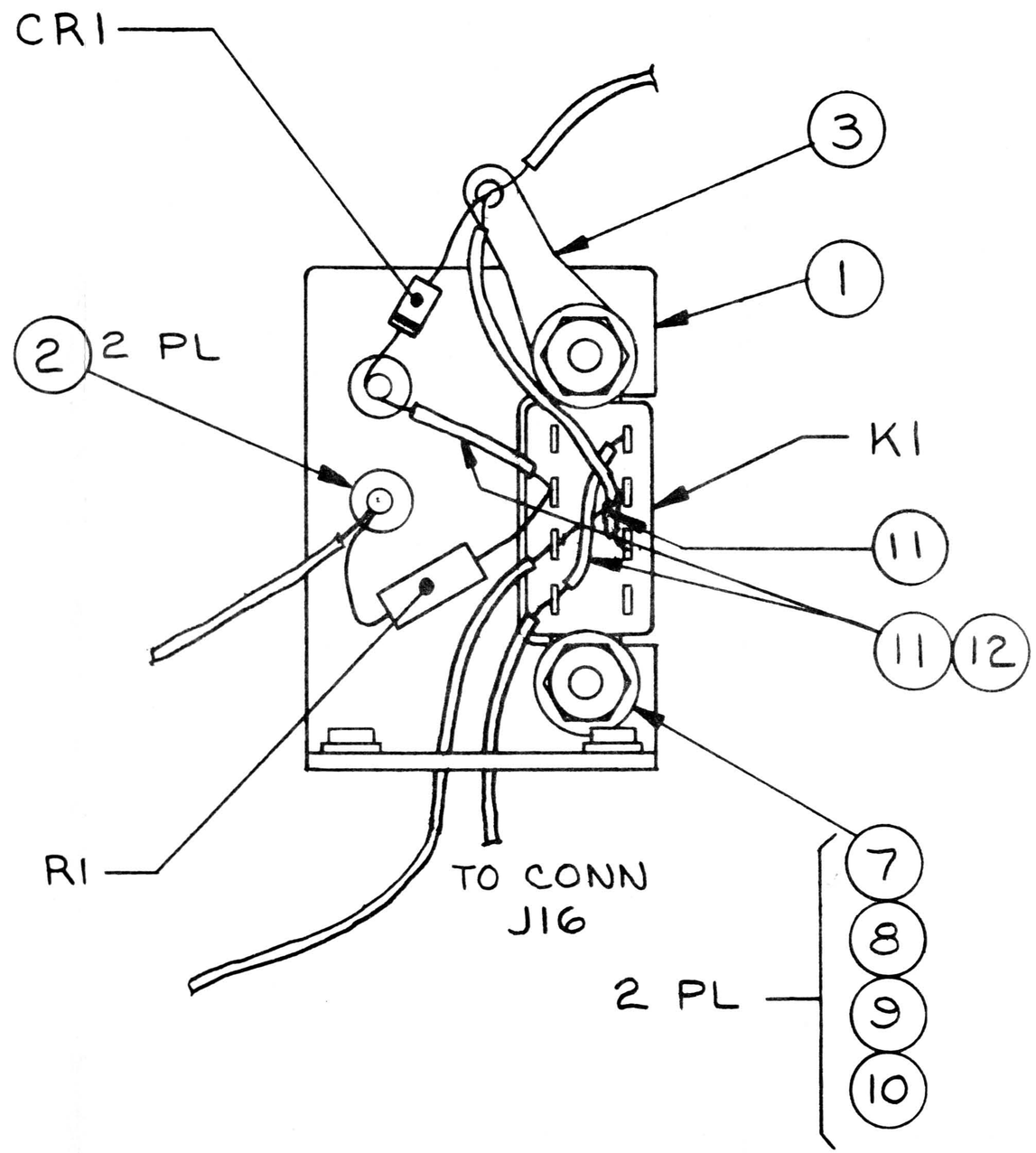

1-80305A54

Figure 6-4. Blower Relay Assembly Parts Location Diagram

Find No.	Qty. Req.	Part No.	Nomenclature	Part Value
001	1	84-P07850V001	MOTHERBOARD	
002	AR	SN63WRP3	SOLDER	
003	AR	11-14167A01	INK	BLACK
004	1	ICT-143-S-T	SOCKET,SOLDER DIP	14 PIN
005	2	09-80331A97	SOCKET,SOLDER DIP	16 PIN
006	1	09-80331A98	SOCKET,SOLDER DIP	24 PIN
C 001	1	23D83441B18	CAPACITOR	4.7UF-20-50
J 003	1	9-80346A47	CONNECTOR	
J 004	1	9-80346A48	CONNECTOR	
J 005	1	9-80346A48	CONNECTOR	
J 006	1	9-80346A48	CONNECTOR	
J 007	1	9-80346A47	CONNECTOR	
J 008	1	9-80346A47	CONNECTOR	
J 009	1	9-80346A47	CONNECTOR	
J 012	1	9-80346A47	CONNECTOR	
L 001	1	25-83127G01	CHOKE,AUDIO	
L 002	1	25-83127G01	CHOKE,AUDIO	
L 003	1	25-83127G01	CHOKE,AUDIO	
L 004	1	24-80369A34	COIL	47UH
L 005	1	24-80348A83	COIL	470UH
L 006	1	24-80369A35	COIL	100UH

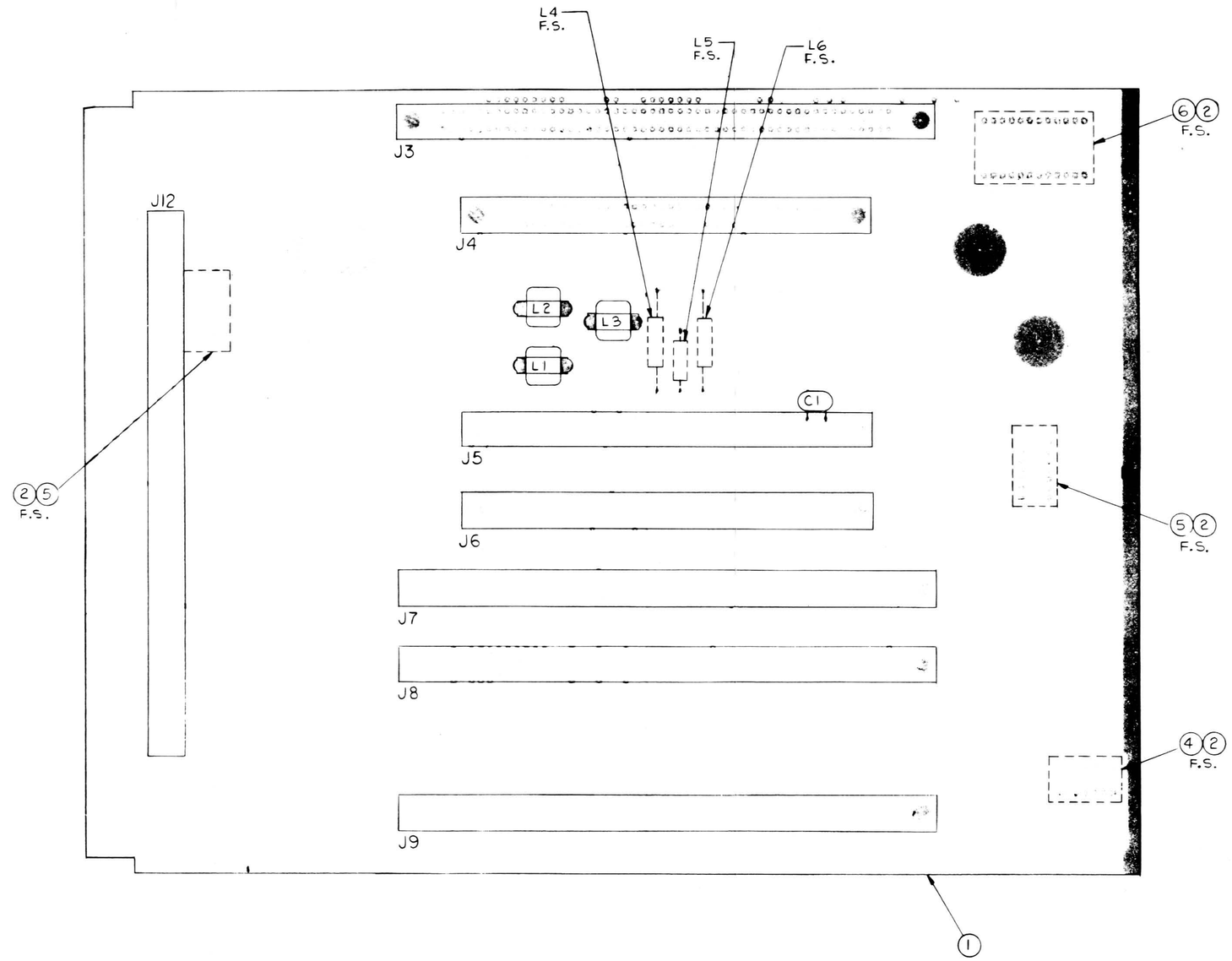

Figure 6-2. Motherboard Assembly RTL-4089A Parts Location Diagram

SECTION 7

LOW VOLTAGE POWER SUPPLY (A1)

7-1. GENERAL. The low voltage power supply (figure 7-1) converts an AC line voltage input or a DC voltage input to the required DC operating voltages. The power supply is composed of four modules, each module containing a printed wiring board. These modules are the relay, control, switcher, and output modules. Protection circuits protect the power supply against short circuits, high internal temperatures, and high and low DC bus voltages.

7-2. INPUT POWER CONTROL. When AC power is applied to the power supply, the output of the AC rectifier and filter circuit provides the DC bus voltage. An AC sense circuit provides a control voltage when AC power is present. This control voltage isolates the DC voltage input from the DC bus and drives the front panel AC indicator.

7-3. The off, standby, or on operating mode of the power supply is selected by the control circuit. When the analyzer is off, the frequency standard and chopper generator are off, and the battery charger is on. When the analyzer is in standby, the chopper generator is off and the frequency standard and battery charger are on. When the analyzer is on, the frequency standard and chopper generator are on and the battery charger is off. Thus, the battery is charged when the analyzer is in the off and standby modes of operation. The frequency standard operates in the standby and on modes of operation.

7-4. The battery charger requires a voltage higher than the nominal DC bus voltage. This increased voltage, 32V, is provided by the AC boost circuit.

7-5. To operate the power supply using a DC voltage input, the AC power input must be removed, disabling the AC sense voltage. When the AC power is removed and the analyzer turned off, no power is present on the DC bus. When the analyzer is switched to the standby mode, the DC relay closes, connecting the DC voltage input to the DC bus and the supply voltage to the frequency standard. When the analyzer is switched on, the chopper generator is enabled and normal operation occurs.

7-6. DC OUTPUT CONTROL. Regulation of the DC output voltages is accomplished by using the +5 volt output as feedback. This feedback voltage is compared to a stable reference voltage (7.9V). The resultant control voltage determines the on time of the pulse width modulator, thus regulating the input voltage to the chopper circuits. The output transformer winding ratios determine the output voltages with respect to the +5-volt feedback.

7-7. The chopper generator provides a 7-volt reference voltage, a 20-kHz squarewave chopper drive signal, and a 20 kHz triangular waveform output for pulse width modulator control. The pulse width control compares the triangular waveform with a control voltage. When the control voltage is equal to the mean DC voltage of the triangular waveform, the pulse width modulator has a 50 percent duty cycle. For control voltages that are above or below the mean DC voltage of the triangular waveform, the duty cycle is proportionately increased or decreased.

7-8. The filtered DC output from the pulse widths modulator is chopped 50 percent through the primary windings of output transformer T2 at a 20 kHz rate. The DC output is alternately switched between each half of the primary winding of T2. Current through the primary winding center top is passed through a current transformer whose output is used for overcurrent protection.

7-9. PROTECTION CIRCUIT. This power supply is protected from shorted outputs, high internal temperatures, and high or low DC bus voltage. In each case, the protection circuit pulls the control voltage line low, disabling the pulse width modulator and shutting down the power supply outputs.

7-10. Short circuit protection is provided by monitoring the current in the primary winding of the output transformer T2. When an output is shorted, the primary winding current will increase significantly. This causes the overcurrent detector to pull the control voltage line low, disabling the pulse width modulator and shutting down the output. With the output shut down, there is no primary winding current, causing the control voltage line to be released. When the control voltage line is released, the pulse width modulator is again enabled and the power supply outputs are available again. If the short circuit is still present, the shutdown sequence will be repeated. A delay is provided in the overcurrent detector causing the shutdown sequence to cycle at an approximately 0.5 second rate.

7-11. Over temperature protection is provided by a thermal switch. When the temperature of the power supply exceeds the setting of the thermal switch, the switch closes, pulling the control voltage line low, disabling the pulse width modulator and shutting down the power supply outputs. Normal power supply operation will resume when the temperature returns to a safe operating level.

7-12. Protection against high or low DC or AC line inputs is provided by monitoring the DC bus voltage. When the DC bus voltage exceeds 20 volts, or falls below 10 volts, the high/low shutdown circuit pulls the control voltage line low, disabling the pulse width modulator and shutting down the power supply outputs. When the DC bus voltage returns to normal, the power supply will automatically resume normal operation.

7-13. HIGH VOLTAGE CONTROL. The HV BIAS V line and the HV SOURCE V line provide the high voltage power supply A10 with bias voltage and primary power, respectively.

7-14. SWITCHER MODULE A1A1. The switcher module (figure 7-2) contains the pulse width modulator and chopper circuits. The input PWM DRIVE signal, from the control module, switches the chopping circuit on and off. This produces a rectangular wave output which is filtered and applied to transformer choppers A and B. In effect, this action regulates the voltage which is applied to transformer T201 on the output module. The PWM OUT signal is a secondary input to the voltage regulator comparator on the control module.

7-15. Transformer choppers A and B are driven by CHOPPER DR A and CHOPPER DR B signals from the control module. Output signals XFMR DR A and XFMR DR B are 180-degrees out-of-phase and XFMR DR A' and XFMR DR B' are 180-degrees out-of-phase. An output, HV SOURCE V, from the chopping circuit is the primary power source for the high voltage power supply.

7-16. OVP (Overvoltage Protection). The OVP zener is connected to the +5V output from the output module and limits the maximum +5 volt level to +6.3 volts.

7-17. OUTPUT MODULE A1A2. The output module (figure 7-3) provides the regulated output voltages and the current sense voltage for the overcurrent protection circuit. Input power is provided by signals XMFR DR A, A', B, and B'. These signals are 20 kHz squarewaves and drive the primary windings of transformer T201. After full wave rectification and filtering, the nominal output voltages are available as shown in figure 7-3.

7-18. The primary current of transformer T201 is monitored by transformer T202. The voltage developed across T202 is full wave rectified and applied to the current limit circuit on the control module by the CURRENT LIMIT SENSE signal. An increase in the primary current of T201 produces a corresponding increase in the voltage developed across T202. This increase is applied to the current limit circuit and overcurrent protection is initiated.

7-19. Regulation of the output voltage is accomplished by the +5-volt feedback. When the +5-volt output is regulated, the remaining output voltages will be regulated because of the turns ratio of the windings between the outputs. When the +5-volt output is held to one percent regulation, the other outputs will be held to five percent regulation.

7-20. The OVP (Overvoltage Protection) output is applied to a 6.2-volt zener diode mounted on the chopper assembly. This provides overvoltage protection to the +5-volt output.

7-21. CONTROL MODULE A1A3. The control module (figure 7-3) provides pulse width modulation control and contains the protection circuits. Pulse width modulation control is accomplished by comparing a 7.9V reference voltage to the +5-volt feedback from the output module. The resultant integrated control voltage is applied to the pulse width control. This voltage is compared to the 20 kHz triangle voltage to determine the duty cycle of the pulse width modulator. The chopper drive outputs are squarewaves and are 180-degrees out-of-phase with each other.

7-22. When the DC BUS voltage is over 20 or under 10 volts DC, the over/under voltage protection circuit pulls the control voltage signal to the pulsewidth control circuit low. This action shuts down the pulsewidth modulator.

7-23. The soft start circuit slows the rise time of the control signal to the pulsewidth control circuits. When the signal reaches the operating level the soft start circuit is switched out of the control loop.

7-24. The overcurrent detector compares a signal that is proportioned to the current in the current transformer, to a reference. When the current is too high, the control signal is pulled low, shutting down the output module. After a delay, the output module operates again, if the malfunction causing the overcurrent is still present, the module will shutdown again. This sequence will cycle at a 0.5 second rate until the malfunction is corrected.

7-25. When the internal temperature of the power supply rises above 85° C, the overtemp shutdown circuit causes the control signal to go low, shutting down the pulsewidth control circuit. The control logic functions are shown in table 7-1.

Table 7-1. Control Logic Functions

Input Signals		Output Signals				
$\overline{\text{Pwr On}}$	AC Sense	Batt Chr Enable	HV Bias Supply V	AC Led	DC Led Anode	$\overline{\text{Relay Enable}}$*
Low	Low	High	On	Off	On	Low
Low	High	Low	On	On	Off	High
High	Low	Low	Off	Off	Off	Low
High	High	High	Off	On	Off	High

*Note that RELAY ENABLE low, does not imply that the relay is closed. The $\overline{\text{PWR OFF}}$ signal on the relay module must also be high to close the relay.

7-24. RELAY MODULE A1A4. The relay module (figure 7-5) is mounted on one end plate of the power supply. Primary power is applied to the module through a line transformer or the DC input. When an AC input is used, the $\overline{\text{RELAY ENABLE}}$ line is high, the relay is open, and the power supply operates from the AC input. The MAIN AC and $\overline{\text{MAIN AC}}$ lines receive a 13.5-volt AC rms input from the line transformer. After full wave rectification, the DC power is routed throughout the power supply on the DC bus. Filtering of the DC power is done on the switcher module.

7-25. When the DC input is used, the $\overline{\text{RELAY ENABLE}}$ line is low, the relay is closed, and the power supply operates from the dc input. The battery charge voltage is boosted to 32 volts using the AC bus voltage to bias an AC boost winding center tap.

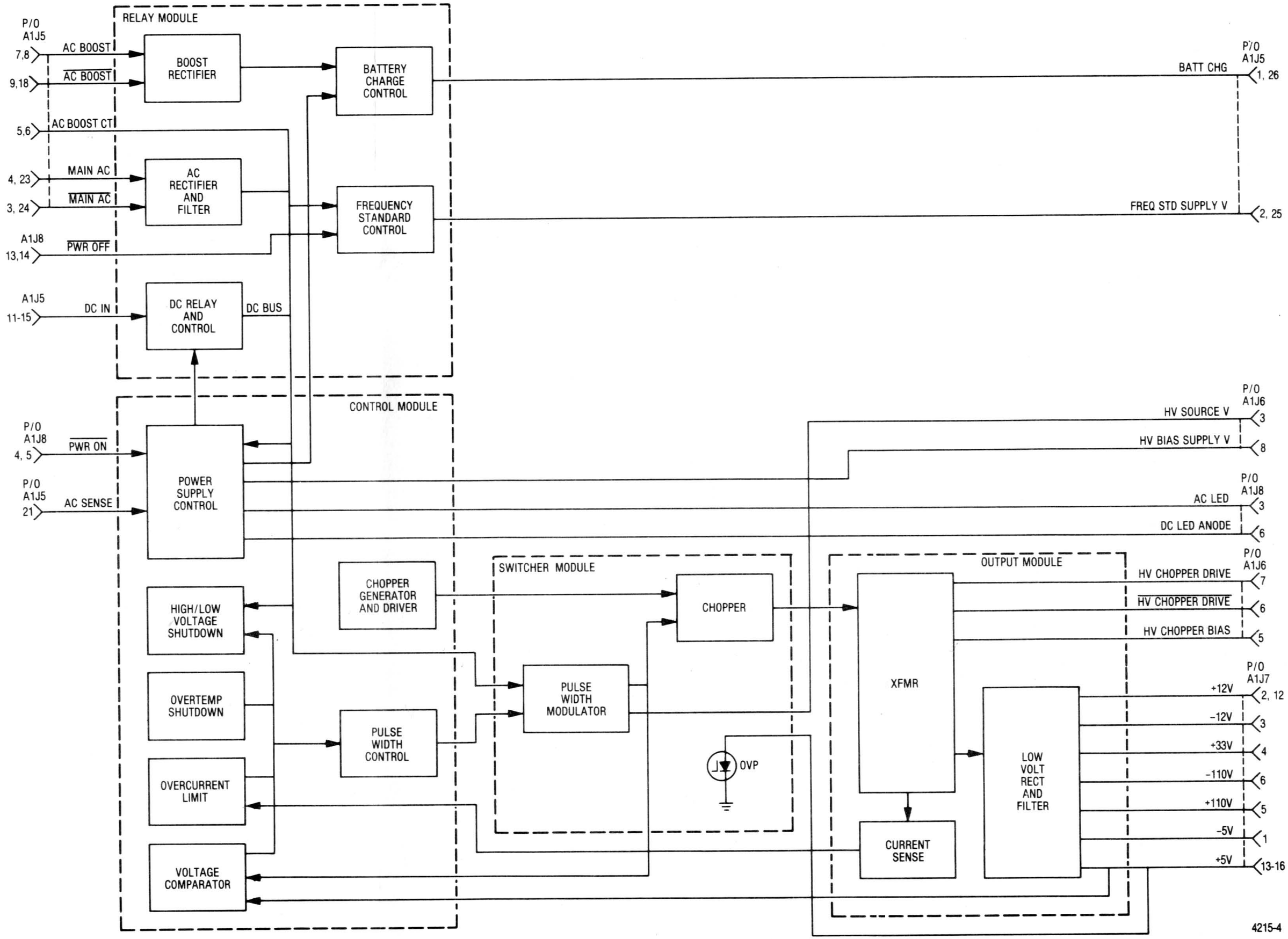

Figure 7-1. Low-Voltage Power Supply A1 Block Diagram

NOTES:

1. PINS 14 AND 15 ARE CONNECTED TO DC BUS BUT ARE NOT USED ON A2 BOARD

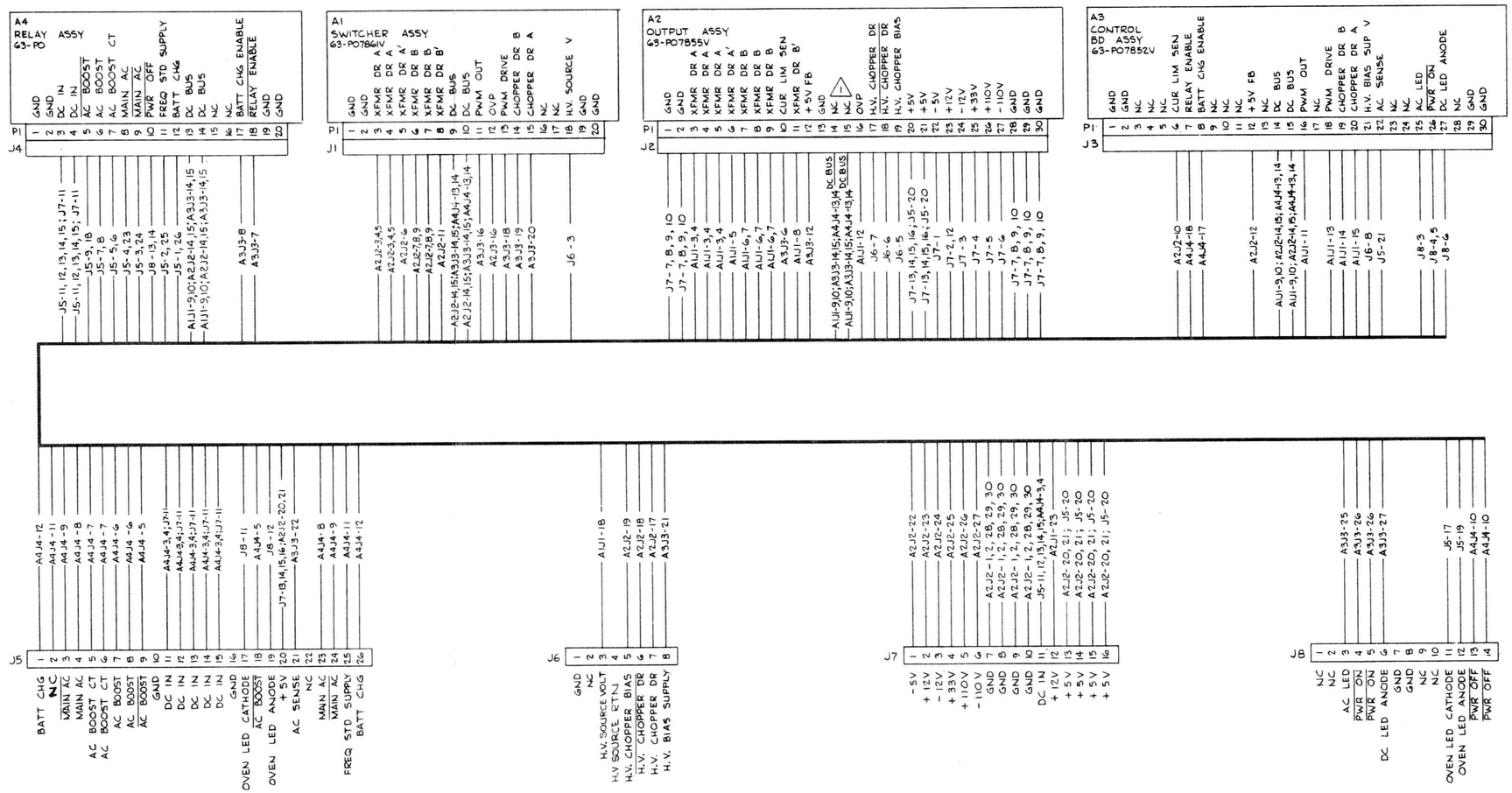

Figure 7-2. Low Voltage Power Supply A1 Interconnection Diagram

Find No.	Qty. Req.	Part No.	Nomenclature	Part Value
005	1	27-P07858V001	CHASSIS,LVPS	
006	6	MS24693-S25	SCREW,FH	.138-32X.312
007	6	MS35206-214	SCREW,PH	.1120-40X.312
008	6	MS35338-40	WASHER,LK	.112
009	6	MS27183-3	WASHER,FL	.125
011	4	MS35206-227	SCREW	.1380-32X.312
012	4	MS35338-41	WASHER	.138
013	4	MS27183-6	WASHER	.156
014	AR	11-14167A01	INK	BLACK
A 001	1	RTP-4016A	SWITCHER ASSEMBLY	
A 002	1	RTP-4013A	OUTPUT PWB ASSEMBLY	
A 003	1	RTP-4012A	CONTROL PWB ASSEMBLY	
A 004	1	1-80305A68	RELAY ASSEMBLY	
A 005	1	RTP-4014A	MOTHER BOARD ASSEMBLY	

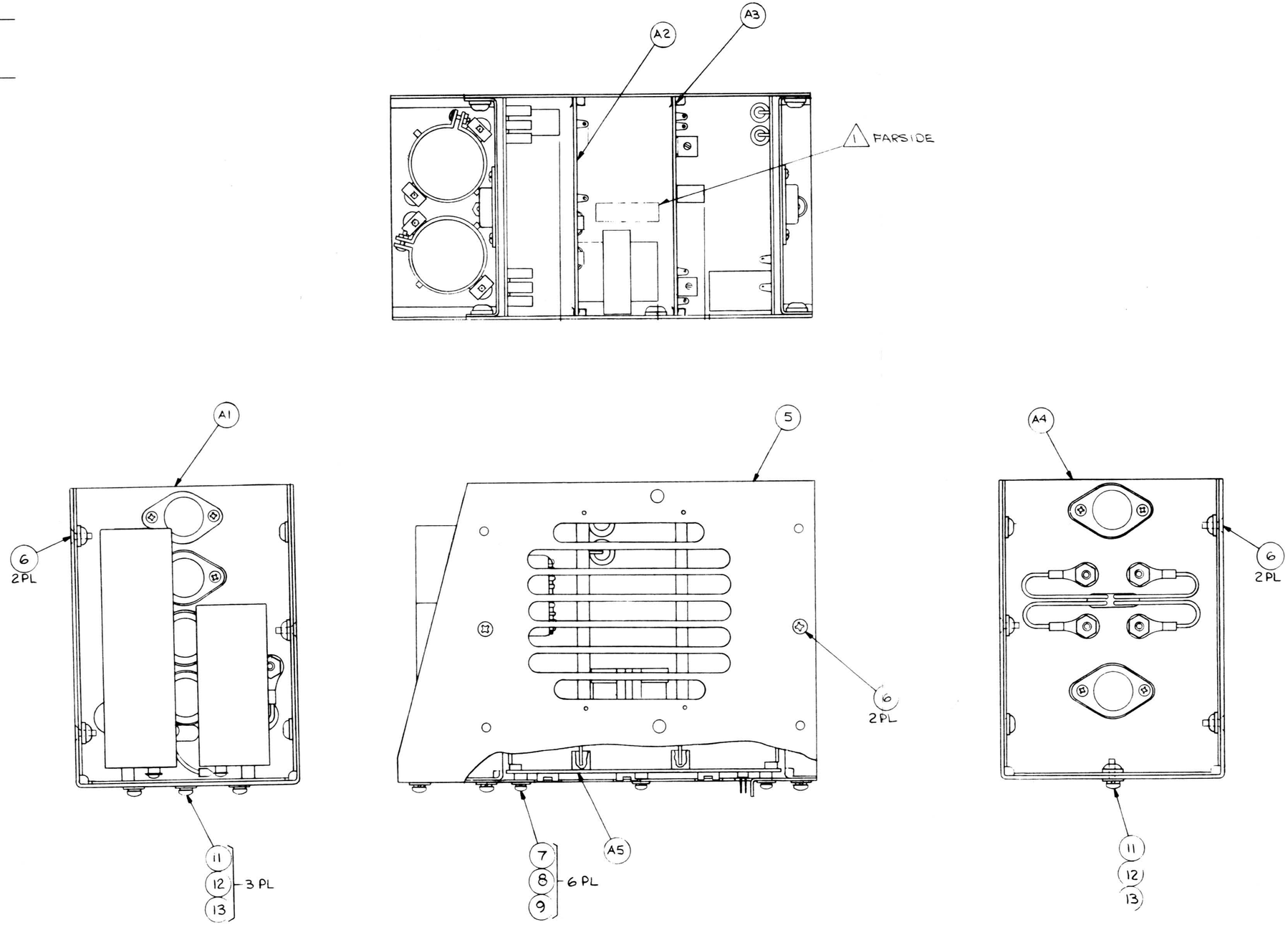

Figure 7-3. Low Voltage Power Supply A1(RTP-1005A) Parts Location Diagram

Find No.	Qty. Req.	Part Number	Nomenclature	Part Value
001	1	84-P07871V001	MOTHER BOARD	
002	6	B1534-B-1/8-5	SPACER,SWAGE	
003	AR	SN63WRP3	SOLDER	
004	AR	11-14167A01	INK	BLACK
005	2	KFS2-256	NUT,PRESS,MIN	
J 001	1	09-80331A90	CONNECTOR	
J 002	1	09-80331A89	CONNECOR,EDGE	
J 003	1	09-80331A89	CONNECOR,EDGE	
J 004	1	09-80331A90	CONNECTOR	
J 005	1	1-87543-3	CONNECTOR	
J 006	1	09-80331A95	SOCKET,SOLDER DIP	8 PIN
J 007	1	09-80331A97	SOCKET,SOLDER DIP	16 PIN
J 008	1	ICT-143-S-T	SOCKET,SOLDER DIP	14 PIN

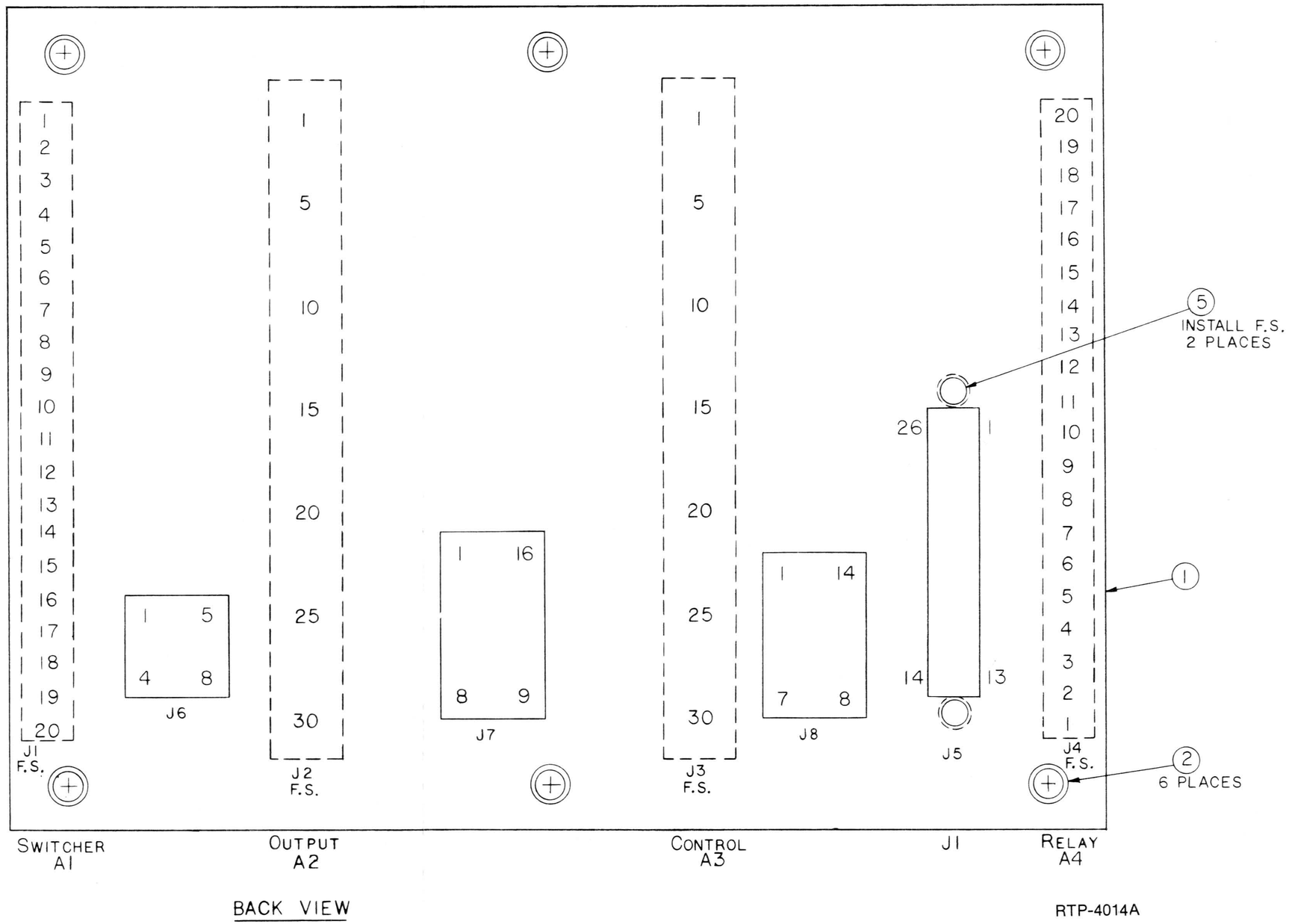

Figure 7-18. Low Voltage Power Supply A1 Motherboard Parts Location

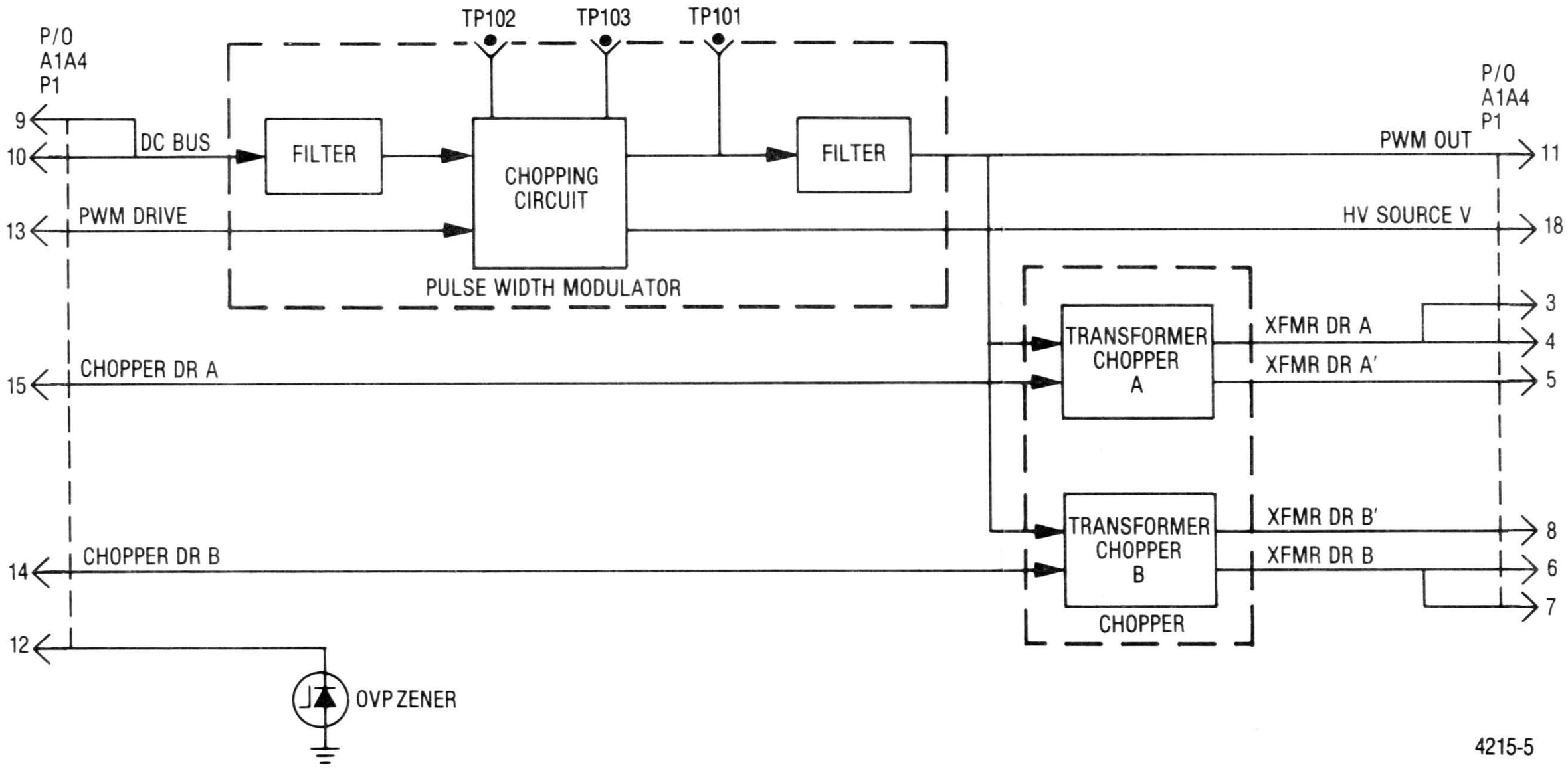

Figure 7-4. Low Voltage Power Supply Switcher Module A1A1 Block Diagram

NOTES:

1. PARTIAL REFERENCE DESIGNATIONS ARE SHOWN. FOR COMPLETE DESIGNATION PREFIX WITH A1.
2. FOR REFERENCE DRAWINGS REFER TO:
   01-P07891V SWITCHER ASSY
   01-P07862V SWITCHER PWB ASSY
3. UNLESS OTHERWISE SPECIFIED:
   ALL RESISTORS ARE IN OHMS, ±5 PCT, 1/4 WATT.
   ALL CAPACITORS ARE IN UF.
   ALL INDUCTORS ARE IN UH.
   ALL VOLTAGES ARE DC.
4. * – COMPONENTS MOUNTED TO PLATE SWITCH MOUNTING.

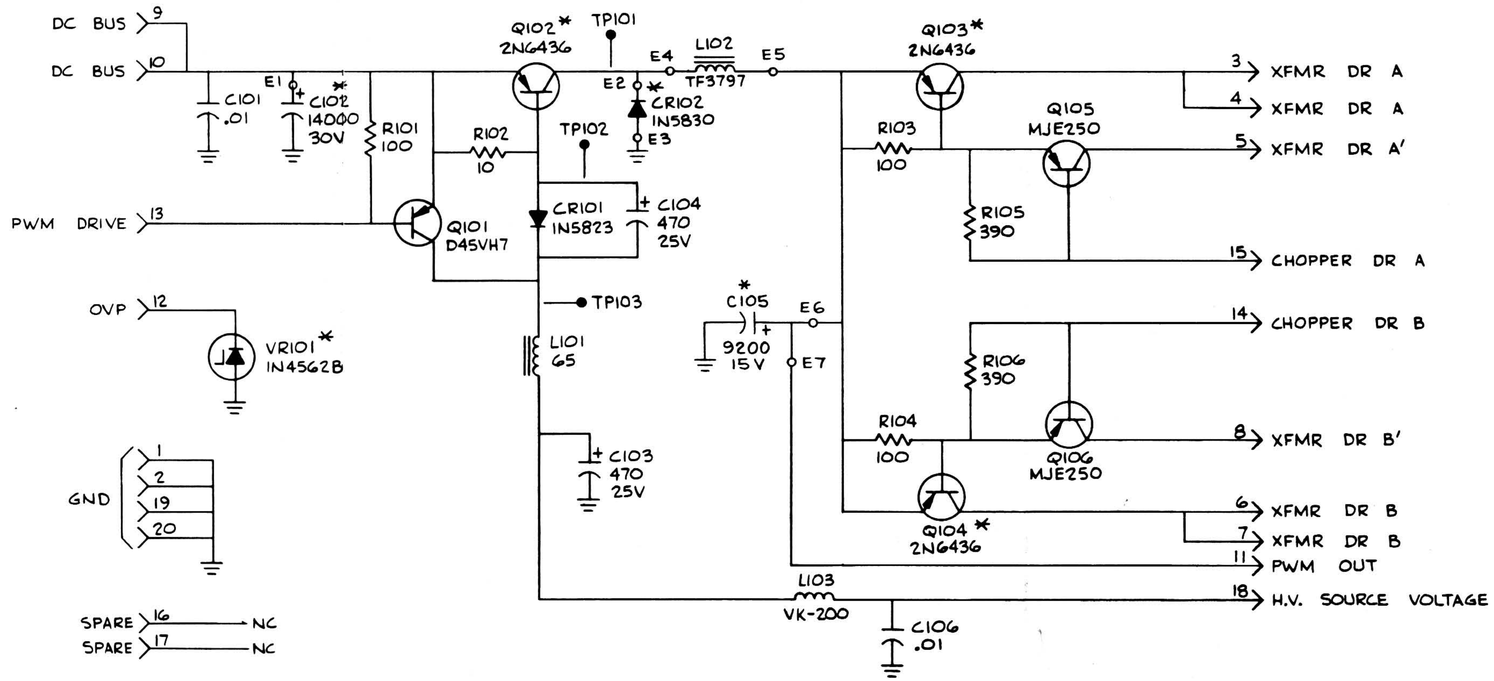

Figure 7-5. Low Voltage Power Supply Switcher Module A1A1 Schematic Diagram

Find No.	Qty. Req.	Part No.	Nomenclature	Part Value
001	1	84-P07863V001	PRINTED WIRING BOARD	
002	1	09-80331A91	CONNECTOR	
003	7	M55155/29-7	TERMINAL	
004	6	B1534-B-1/8-5	SPACER,SWAGE	.125LG
005	6	B1534-B-3/32-5	SPACER,SWAGE	.093LG
006	3	6107B-14	HEAT SINK	
007	8	640206-1	JACK,PC	
008	AR	SN63WRP3	SOLDER	
009	AR	11-14167A01	INK	BLACK
010	1	5607-84	BUSHING,NYLON	
011	1	MS35206-234	SCREW	.1380-32X1
012	1	MS27183-5	WASHER,FLAT	.156
013	1	MS35338-41	WASHER,LOCK	.138
014	1	MS35649-262	NUT,HEX	.1380-32
015	3	MS35649-242	NUT,HEX	.1120-40
016	3	MS35338-40	WASHER,LK	.112
017	1	MS27183-3	WASHER,FL	.125
018	3	MS35206-216	SCREW,P.H.	.1120-40X.438
019	2	B52200F006	WASHER,COMP	
020	1	14-80370A48	INSULATOR,INDUCTOR	
021	AR	SN96WRMAP3	SOLDER	
022	AR	M23053/5-206-C	INSULATION SLEEVING	.250 CLR
C 101	1	21D82428B59	CAPACITOR	.01UF-2080-200
C 103	1	23-80369A77	CAPACITOR	470UF-25V
C 104	1	23-80369A77	CAPACITOR	470UF-25V
C 106	1	21D82428B59	CAPACITOR	.01UF-2080-200
CR101	1	48-80346A67	DIODE	20V-5A
L 101	1	25C84148F01	INDUCTOR	65UH
L 102	1	24-80369A54	INDUCTOR	57MH
L 103	1	24-80369A46	COIL	
Q 101	1	48-80368A86	TRANSISTOR	
Q 105	1	MJE250	TRANSISTOR	
Q 106	1	MJE250	TRANSISTOR	
R 101	1	6S124A25	RESISTOR	100-5-1/4
R 102	1	6S124A01	RESISTOR	10-5-1/4
R 103	1	6S124A25	RESISTOR	100-5-1/4
R 104	1	6S124A25	RESISTOR	100-5-1/4
R 105	1	6S124A39	RESISTOR	390-5-1/4
R 106	1	6S124A39	RESISTOR	390-5-1/4
TP101	1	09-80331A88	JACK	WHITE
TP102	1	09-80331A88	JACK	WHITE
TP103	1	09-80331A88	JACK	WHITE

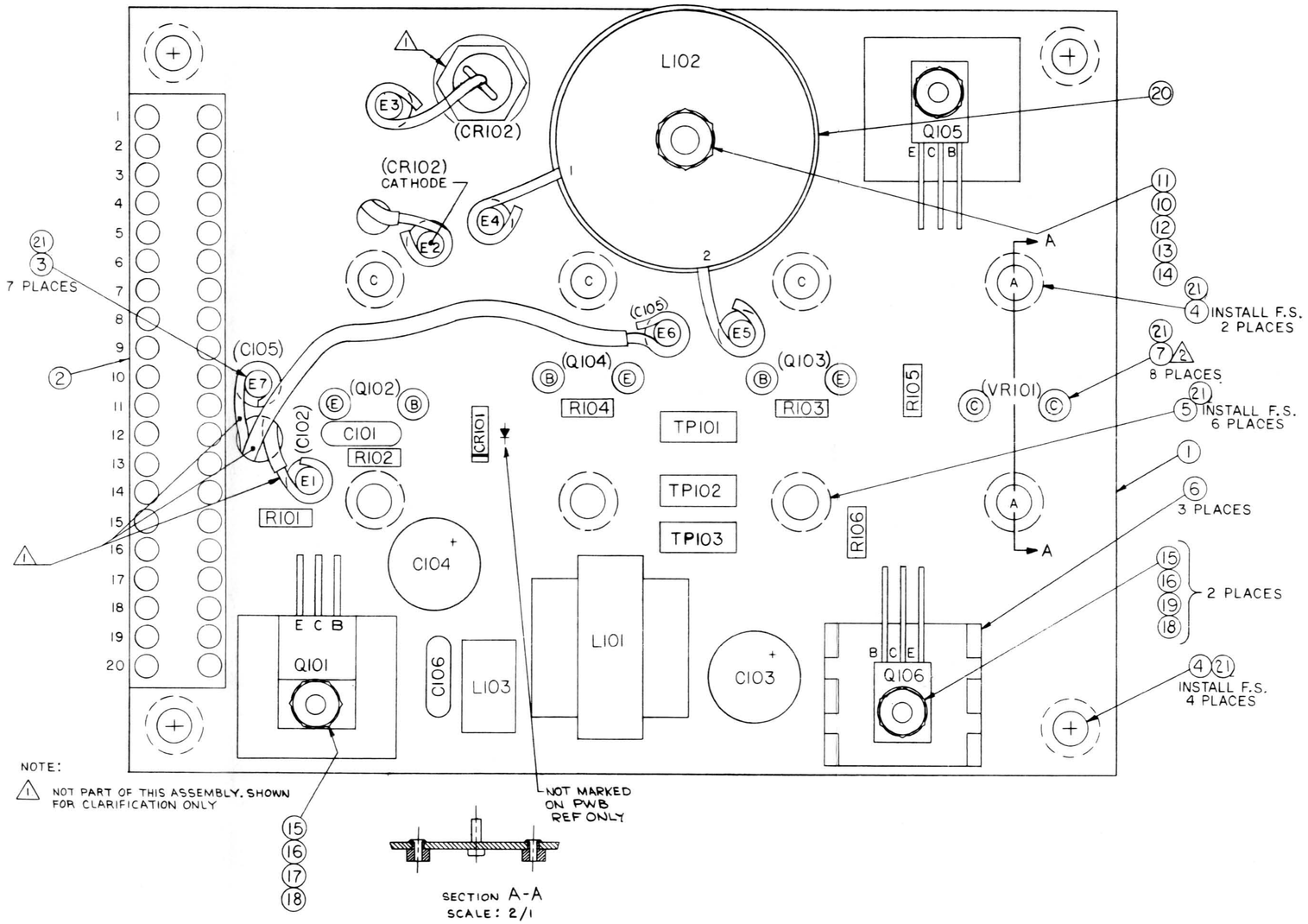

1-80305A66

Figure 7-7. Low Voltage Power Supply Switcher Module A1A1 PWB Parts Location Diagram

1-80305A66

Figure 7-7. Low Voltage Power Supply Switcher Module A1A1 PWB Parts Location Diagram

Find No.	Qty. Req.	Part No.	Nomenclature	Part Value
001	1	1-80305A66	SWITCHER PWB ASSEMBLY	
002	1	64-P07867V001	PLATE,MOUNTING SWITCH	
003	1	B51566F020	WASHER,LOCK	NO.10
004	1	B51568F015	NUT,HEX	10-32
005	1	B52600F001	INSULATOR,MICA	
006	1	B-225-10X	TERMIAL,CRIMP INSUL	NO.10
007	1	5607-92	WASHER,SHOULDER	
008	3	14-15141A01	INSULATOR,MICA	
009	6	5607-82	WASHER,SHOULDER	
010	2	42-80331A26	CLAMP,CAPACITOR	
011	6	C9029-4Z-1	CLIP,FASTENER	
012	6	MS51861-14	SCREW	.112-24X.375
014	2	MS35207-263	SCREW	.1900-32X.500
015	2	MS27183-8	WASHER,FL	.219
016	4	MS35333-39	WASHER,LK,INTERNAL TO	.190
017	2	MS35207-260	SCREW	.1900-32X.312
018	2	MS20659-104	TERMINAL,LUG-CRIMP	
019	12	MS35206-215	SCREW,PH	.1120-40X.375
020	4	MS27183-3	WASHER,FL	.125
021	4	MS35338-40	WASHER,LK	.112
022	AR		WIRE,ELEC	14 WHT
023	AR	SN63WRP3	SOLDER	
024	AR	G-642	COMPOUND,THERMAL	
025	AR	11-14167A01	INK	BLACK
026	2	1186-10-B-5	SPACER	
027	AR	M23053/5-105-9	INSULATING SLEEVING	.187 WHT
028	8	MS35335-29	WASHER,LK,EXTERNAL TO	.112
029	AR		WIRE,TEF INS	22 WHT
030	AR		WIRE,SOLID BUS	22
C 102	1	36DX143G030AD2A	CAPACITOR	14000UF-30V
C 105	1	36D922G015AB2A	CAPACITOR	9200UF-15V
CR102	1	48-80368A99	DIODE	
Q 102	1	48-80345A61	TRANSISTOR	
Q 103	1	48-80345A61	TRANSISTOR	
Q 104	1	48-80345A61	TRANSISTOR	
VR101	1	48-80345A79	DIODE	

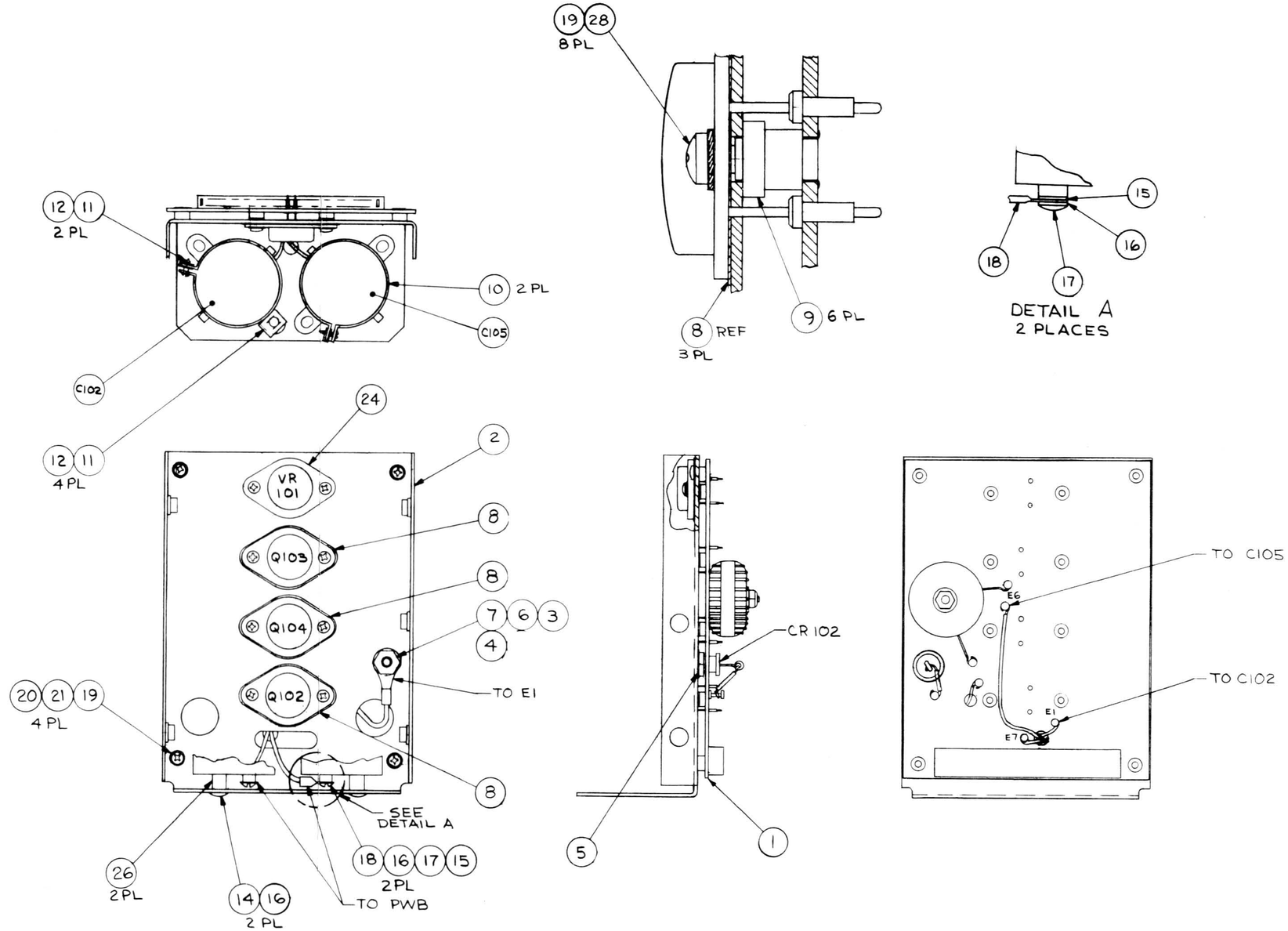

Figure 7-6. Low Voltage Power Supply Switcher Module A1A1 (RTP-4016A) Parts Location Diagram

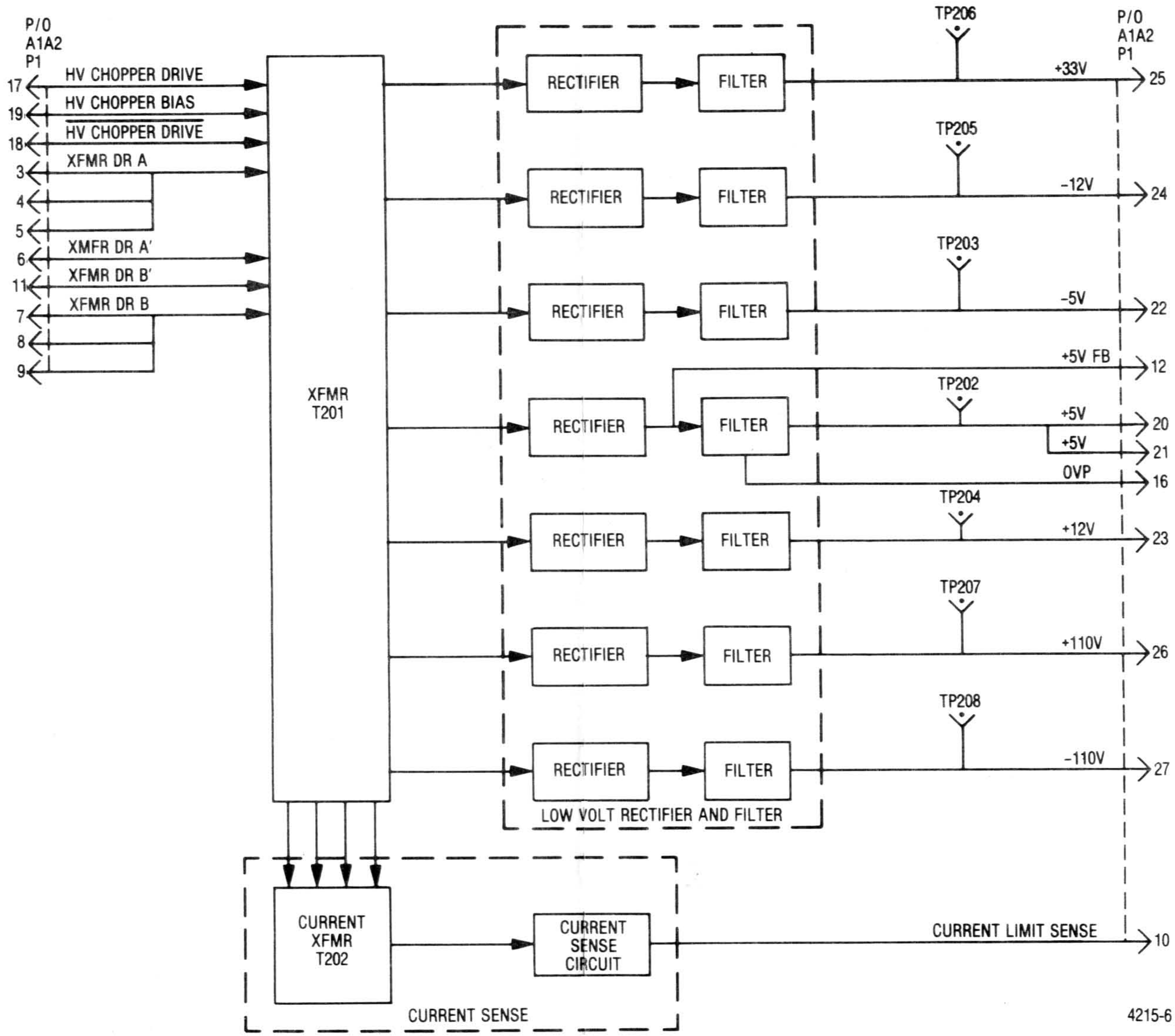

Figure 7-8. Low Voltage Power Supply Output Module A1A2 Block Diagram

NOTES:

1. PARTIAL REFERENCE DESIGNATIONS ARE SHOWN. FOR COMPLETE DESIGNATION PREFIX WITH A2.

2. FOR REFERENCE DRAWINGS REFER TO: 01-P07856V OUTPUT PWB ASSY

3. UNLESS OTHERWISE SPECIFIED:
   ALL RESISTORS ARE IN OHMS, ±5 PCT, 1/4 WATT.
   ALL CAPACITORS ARE IN UF.
   ALL INDUCTORS ARE IN UH.
   ALL VOLTAGES ARE DC.

4. MOTOROLA P/N 24-P08041V001

5. MOTOROLA P/N 24-P07903V001

6. MOTOROLA P/N 24-P08042V001

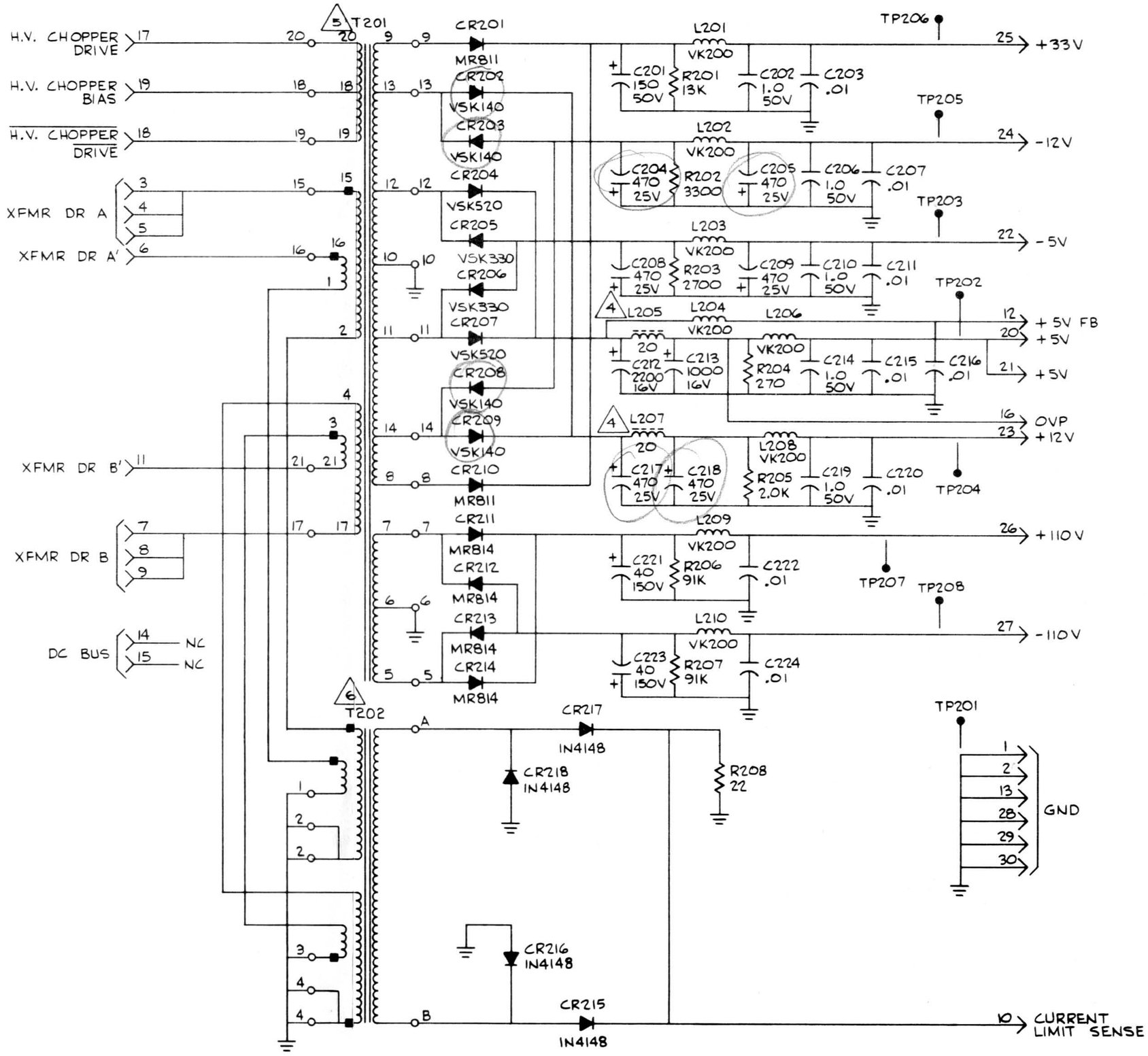

Figure 7-9. Low Voltage Power Supply Output Module A1A2 Schematic Diagram

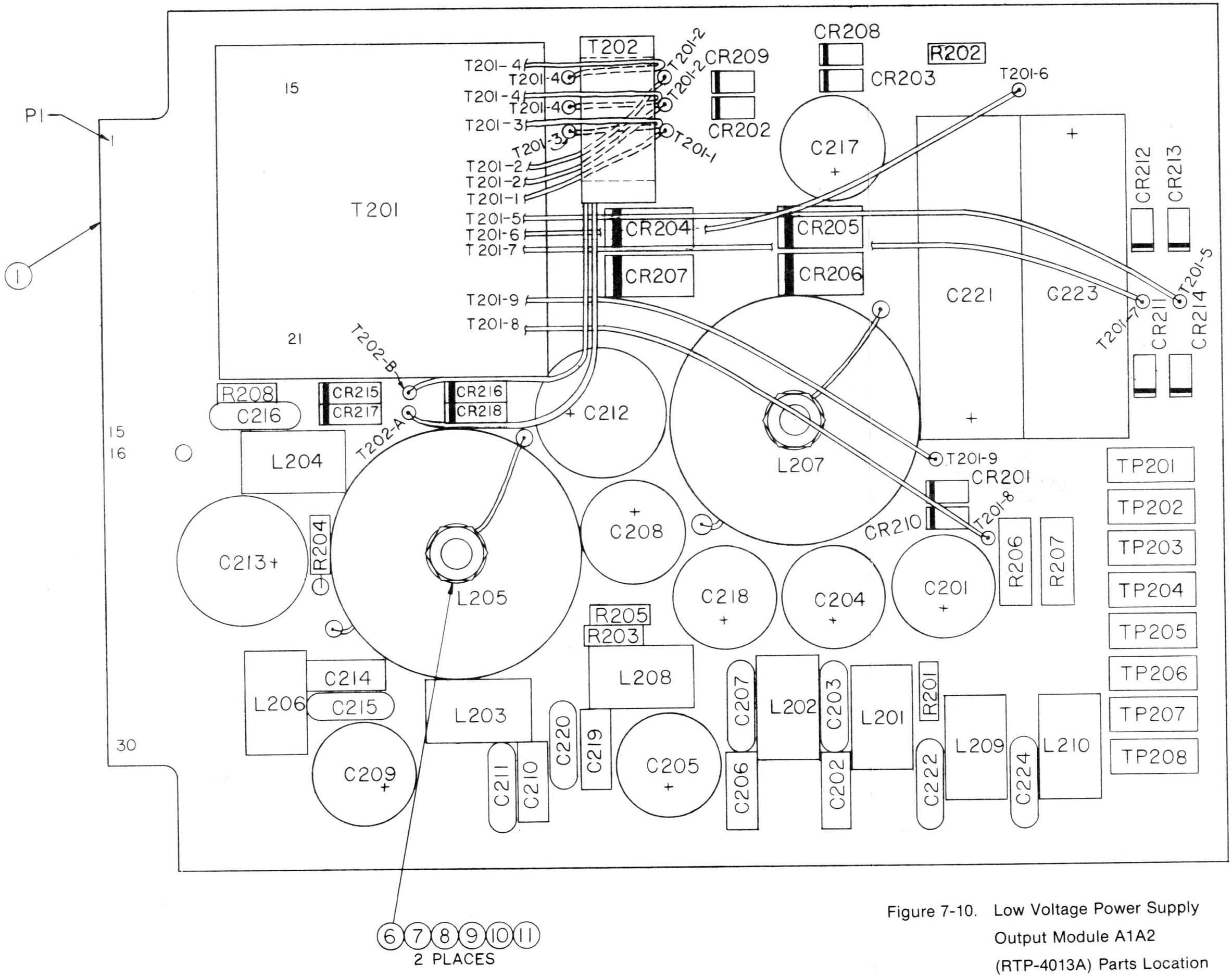

Figure 7-10. Low Voltage Power Supply Output Module A1A2 (RTP-4013A) Parts Location Diagram

Find No.	Qty. Req.	Part No.	Nomenclature	Part Value
		RTP-4013A	A1A2 OUTPUT ASSY	
001	1	84-P07857V001	PRINTED WIRING BOARD	
003	AR	SN63WRP3	SOLDER	
004	AR	11-14167A01	INK	BLACK
006	2	5607-106	WASHER,SHOULDER	
007	2	MS35206-232	SCREW,PH	.1380-32X.750
008	2	MS35338-41	WASHER,LOCK	.138
009	2	MS27183-5	WASHER,FLAT	.156
010	2	MS35649-262	NUT,HEX	.1380-32
011	2	14-15140A04	INSULATOR,INDUCTOR	
012	AR	M23053/5-206-C	INSULATION SLEEVING	.250 CLR
C 201	1	23-80369A75	CAPACITOR	150UF-50V
C 202	1	23-80369A71	CAPACITOR	1UF-50V
C 203	1	21D82428B59	CAPACITOR	.01UF-2080-200
C 204	1	23-80369A68	CAPACITOR	470UF-25V
C 205	1	23-80369A68	CAPACITOR	470UF-25V
C 206	1	23-80369A71	CAPACITOR	1UF-50V
C 207	1	21D82428B59	CAPACITOR	.01UF-2080-200
C 208	1	23-80369A68	CAPACITOR	470UF-25V
C 209	1	23-80369A68	CAPACITOR	470UF-25V
C 210	1	23-80369A71	CAPACITOR	1UF-50V
C 211	1	21D82428B59	CAPACITOR	.01UF-2080-200
C 212	1	23-80369A76	CAPACITOR	2200UF-16V
C 213	1	23-80369A74	CAPACITOR	1000UF-16V
C 214	1	23-80369A71	CAPACITOR	1UF-50V
C 215	1	21D82428B59	CAPACITOR	.01UF-2080-200
C 216	1	21D82428B59	CAPACITOR	.01UF-2080-200
C 217	1	23-80369A68	CAPACITOR	470UF-25V
C 218	1	23-80369A68	CAPACITOR	470UF-25V
C 219	1	23-80369A71	CAPACITOR	1UF-50V
C 220	1	21D82428B59	CAPACITOR	.01UF-2080-200
C 221	1	23-80369A67	CAPACITOR	40UF-150V
C 222	1	21D82428B59	CAPACITOR	.01UF-2080-200
C 223	1	23-80369A67	CAPACITOR	40UF-150V
C 224	1	21D82428B59	CAPACITOR	.01UF-2080-200

Find No.	Qty. Req.	Part No.	Nomenclature	Part Value
CR201	1	48-80345A69	DIODE	100V-1A
CR202	1	48-80346A66	DIODE	40V-1A
CR203	1	48-80346A66	DIODE	40V-1A
CR204	1	48-80346A67	DIODE	20V-5A
CR205	1	48-80368A94	DIODE	30V-3A
CR206	1	48-80368A94	DIODE	30V-3A
CR207	1	48-80346A67	DIODE	20V-5A
CR208	1	48-80346A66	DIODE	40V-1A
CR209	1	48-80346A66	DIODE	40V-1A
CR210	1	48-80345A69	DIODE	100V-1A
CR211	1	48-80345A70	DIODE	400V-1A
CR212	1	48-80345A70	DIODE	400V-1A
CR213	1	48-80345A70	DIODE	400V-1A
CR214	1	48-80345A70	DIODE	400V-1A
CR215	1	48-84463K02	DIODE	
CR216	1	48-84463K02	DIODE	
CR217	1	48-84463K02	DIODE	
CR218	1	48-84463K02	DIODE	
L 201	1	24-80369A46	COIL	
L 202	1	24-80369A46	COIL	
L 203	1	24-80369A46	COIL	
L 204	1	24-80369A46	COIL	
L 205	1	24-80369A55	CHOKE	20UH
L 206	1	24-80369A46	COIL	
L 207	1	24-80369A55	CHOKE	20UH
L 208	1	24-80369A46	COIL	
L 209	1	24-80369A46	COIL	
L 210	1	24-80369A46	COIL	
R 201	1	6S124A76	RESISTOR	13K-5-1/4
R 202	1	6S124A61	RESISTOR	3.3K-5-1/4
R 203	1	6S124A59	RESISTOR	2.7K-5-1/4
R 204	1	6S124A35	RESISTOR	270-5-1/4
R 205	1	6S124A56	RESISTOR	2.0K-5-1/4
R 206	1	6S125A96	RESISTOR	91K-5-1/2
R 207	1	6S125A96	RESISTOR	91K-5-1/2
R 208	1	6S124A09	RESISTOR	22-5-1/4
T 201	1	25-80369A12	TRANSFORMER	
T 202	1	24-80369A56	TRANSFORMER	
TP201	1	09-80331A88	JACK,TIP	WHITE
TP202	1	09-80331A88	JACK,TIP	WHITE
TP203	1	09-80331A88	JACK,TIP	WHITE
TP204	1	09-80331A88	JACK,TIP	WHITE
TP205	1	09-80331A88	JACK,TIP	WHITE
TP206	1	09-80331A88	JACK,TIP	WHITE
TP207	1	09-80331A88	JACK,TIP	WHITE
TP208	1	09-80331A88	JACK,TIP	WHITE

Figure 7-10. Low Voltage Power Supply Output Module A1A2 (RTP-4013A) Parts Location Diagram

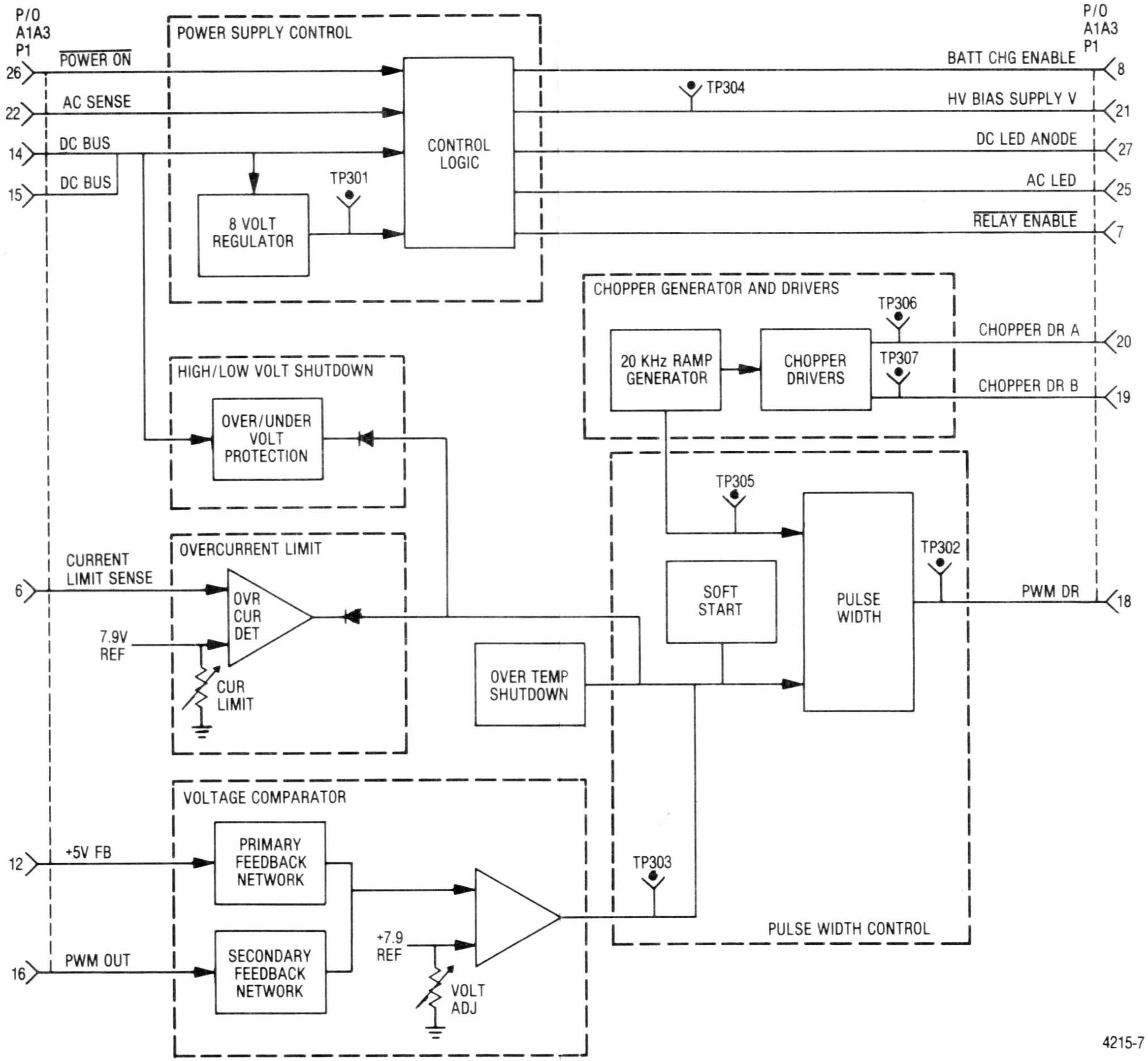

Figure 7-11. Low-Voltage Power Supply Control Module A1A3 Block Diagram

NOTES:

1. PARTIAL REFERENCE DESIGNATIONS ARE SHOWN. FOR COMPLETE DESIGNATION PREFIX WITH A3.
2. FOR REFERENCE DRAWINGS REFER TO: 01-P07853V001 CONTROL PWB ASSY
3. UNLESS OTHERWISE SPECIFIED:
   ALL RESISTORS ARE IN OHMS, ±5 PCT, 1/4 WATT.
   ALL CAPACITORS ARE IN UF.
   ALL INDUCTORS ARE IN UH.
   ALL VOLTAGES ARE DC.

TABLE 1

REF DES	TYPE	GND	VCC PINS VOLT	VCC PINS CONN	NO CONN
U301	LM341P				
U302	CA3140	4	+8V	7	1,5, 8
U303	MLM311	4	+8V	8	5,6
U304	CA3140	4	+8V	7	1,5, 8
U305	MC14011	7	+8V	14	
U306	MC3420	12	+7.9V	9	3,14

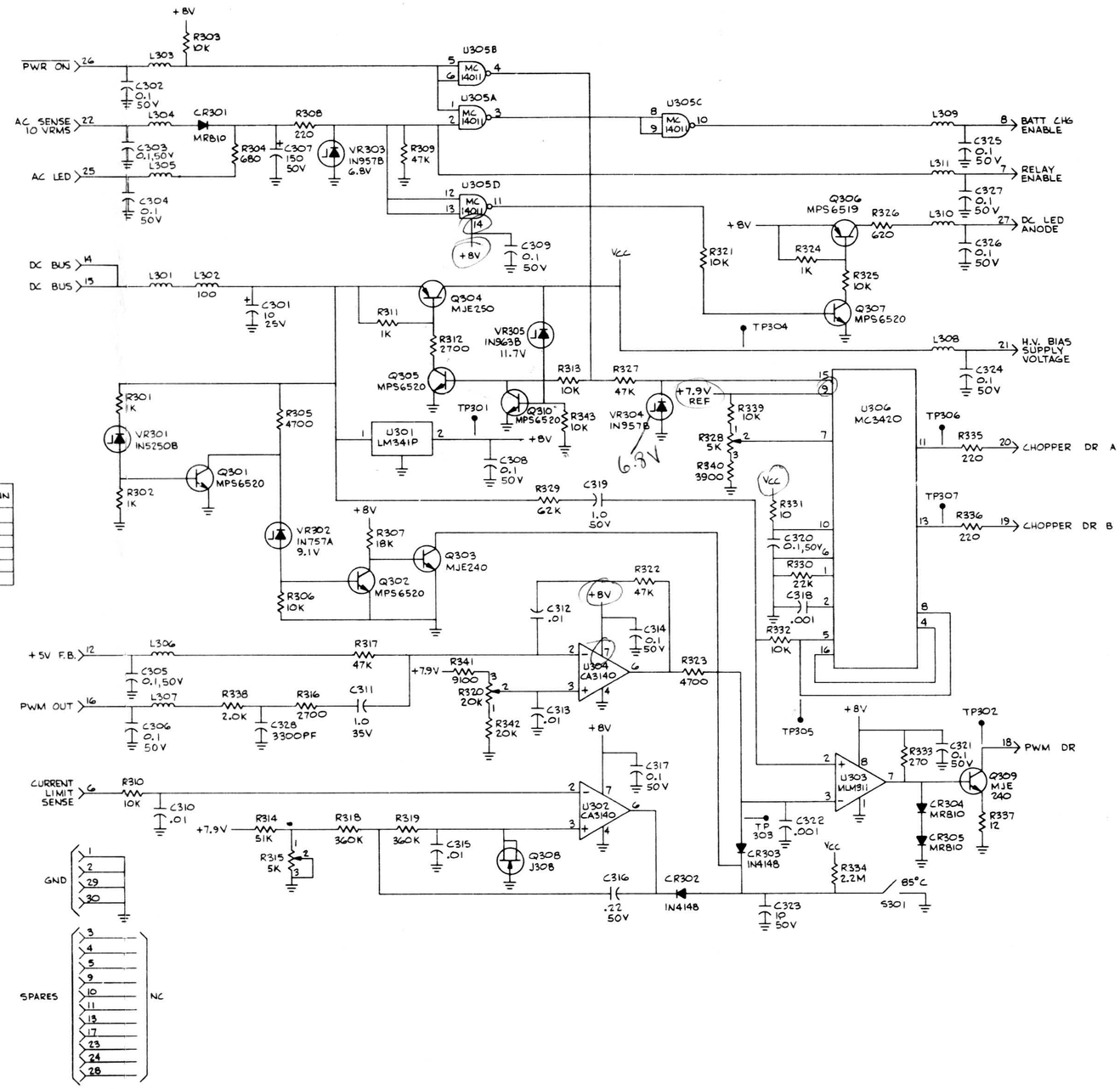

Figure 7-12. Low Voltage Power Supply Control Module A1A3 Schematic Diagram

Find No.	Qty. Req.	Part No.	Nomenclature	Part Value
		RTP-4012A	A1A3 CONTROL ASSY	
001	1	84-P07854V001	PRINTED WIRING BOARD	
003	AR	SN63WRMAP3	SOLDER	
004	AR	11-14167A01	INK	BLACK
006	2	MS35206-217	SCREW,PH	.1120-40X.500
008	2	MS35338-40	WASHER,LOCK	.112
009	2	MS35649-242	NUT,HEX	.1120-40
010	2	14-80370A46	INSULATOR,PLATE	
011	2	B52200F006	WASHER,COMP	
C 301	1	23D84665F01	CAPACITOR	10UF-25V
C 302	1	21-80370A31	CAPACITOR	.1UF-20-50
C 303	1	21-80370A31	CAPACITOR	.1UF-20-50
C 304	1	21-80370A31	CAPACITOR	.1UF-20-50
C 305	1	21-80370A31	CAPACITOR	.1UF-20-50
C 306	1	21-80370A31	CAPACITOR	.1UF-20-50
C 307	1	23-80369A75	CAPACITOR	150UF-50V
C 308	1	21-80370A31	CAPACITOR	.1UF-20-50
C 309	1	21-80370A31	CAPACITOR	.1UF-20-50
C 310	1	21D82428B59	CAPACITOR	.01UF-2080-200
C 311	1	23D83441B15	CAPACITOR	1.0UF-20-35
C 312	1	21D82428B59	CAPACITOR	.01UF-2080-200
C 313	1	21D82428B59	CAPACITOR	.01UF-2080-200
C 314	1	21-80370A31	CAPACITOR	.1UF-20-50
C 315	1	21D82428B59	CAPACITOR	.01UF-2080-200
C 316	1	21-80370A06	CAPACITOR	.22UF-10-50
C 317	1	21-80370A31	CAPACITOR	.1UF-20-50
C 318	1	21D82187B14	CAPACITOR	.001UF-10-100
C 319	1	23-80369A71	CAPACITOR	1UF-50
C 320	1	21-80370A31	CAPACITOR	.1UF-20-50
C 321	1	21-80370A31	CAPACITOR	.1UF-20-50
C 322	1	21D82187B14	CAPACITOR	.001UF-10-100
C 323	1	502D106G050BB5C	CAPACITOR	10UF-50V
C 324	1	21-80370A31	CAPACITOR	.1UF-20-50
C 325	1	21-80370A31	CAPACITOR	.1UF-20-50
C 326	1	21-80370A31	CAPACITOR	.1UF-20-50
C 327	1	21-80370A31	CAPACITOR	.1UF-20-50
C 328	1	21D82428B10	CAPACITOR	3300PF-10-100
CR301	1	48-80345A68	DIODE	50V-1A
CR302	1	48-84463K02	DIODE	
CR303	1	48-84463K02	DIODE	
CR304	1	48-80345A68	DIODE	50V-1A
CR305	1	48-80345A68	DIODE	50V-1A
L 301	1	24C83961B01	CHOKE,RF	
L 302	1	24-84309A90	INDUCTOR	100UH
L 303	1	24C83961B01	CHOKE,RF	
L 304	1	24C83961B01	CHOKE,RF	
L 305	1	24C83961B01	CHOKE,RF	
L 306	1	24C83961B01	CHOKE,RF	
L 307	1	24C83961B01	CHOKE,RF	
L 308	1	24C83961B01	CHOKE,RF	
L 309	1	24C83961B01	CHOKE,RF	
L 310	1	24C83961B01	CHOKE,RF	
L 311	1	24C83961B01	CHOKE,RF	
Q 301	1	48-80368A91	TRANSISTOR	MPS6520 SCREENED
Q 302	1	48-80368A91	TRANSISTOR	MPS6520 SCREENED
Q 303	1	MJE240	TRANSISTOR	
Q 304	1	MJE250	TRANSISTOR	
Q 305	1	48-80368A91	TRANSISTOR	MPS6520 SCREENED
Q 306	1	48-80368A92	TRANSISTOR	MPS6519 SCREENED
Q 307	1	48-80368A91	TRANSISTOR	MPS6520 SCREENED
Q 308	1	48-80345A41	TRANSISTOR	
Q 309	1	MJE240	TRANSISTOR	
Q 310	1	48-80368A91	TRANSISTOR	MPS6520 SCREENED
R 301	1	6S124A49	RESISTOR	1K-5-1/4
R 302	1	6S124A49	RESISTOR	1K-5-1/4
R 303	1	6S124A73	RESISTOR	10K-5-1/4
R 304	1	6S124A45	RESISTOR	680-5-1/4
R 305	1	6S124A65	RESISTOR	4.7K-5-1/4
R 306	1	6S124A73	RESISTOR	10K-5-1/4
R 307	1	6S124A79	RESISTOR	18K-5-1/4
R 308	1	6S124A33	RESISTOR	220-5-1/4
R 309	1	6S124A89	RESISTOR	47K-5-1/4
R 310	1	6S124A73	RESISTOR	10K-5-1/4
R 311	1	6S124A49	RESISTOR	1K-5-1/4
R 312	1	6S124A59	RESISTOR	2.7K-5-1/4
R 313	1	6S124A73	RESISTOR	10K-5-1/4
R 314	1	6S124A90	RESISTOR	51K-5-1/4
R 315	1	18D83452F11	RESISTOR,VARIABLE	5K
R 316	1	6S124A59	RESISTOR	2.7K-5-1/4
R 317	1	6S124A89	RESISTOR	47K-5-1/4
R 318	1	6S124B11	RESISTOR	360K-5-1/4
R 319	1	6S124B11	RESISTOR	360K-5-1/4
R 320	1	18D83452F15	RESISTOR,VARIABLE	20K
R 321	1	6S124A73	RESISTOR	10K-5-1/4
R 322	1	6S124A89	RESISTOR	47K-5-1/4
R 323	1	6S124A65	RESISTOR	4.7K-5-1/4
R 324	1	6S124A49	RESISTOR	1K-5-1/4
R 325	1	6S124A73	RESISTOR	10K-5-1/4
R 326	1	6S124A44	RESISTOR	620-5-1/4
R 327	1	6S124A89	RESISTOR	47K-5-1/4
R 328	1	18D83452F11	RESISTOR,VARIABLE	5K
R 329	1	6S124A92	RESISTOR	62K-5-1/4
R 330	1	6S124A81	RESISTOR	22K-5-1/4
R 331	1	6S124A01	RESISTOR	10-5-1/4
R 332	1	6S124A73	RESISTOR	10K-5-1/4
R 333	1	6S124A35	RESISTOR	270-5-1/4
R 334	1	6S124B30	RESISTOR	2.2M-5-1/4
R 335	1	6S125A33	RESISTOR	220-5-1/2
R 336	1	6S125A33	RESISTOR	220-5-1/2
R 337	1	6S124A03	RESISTOR	12-5-1/4
R 338	1	6S124A56	RESISTOR	2000-5-1/4
R 339	1	6S124A73	RESISTOR	10K-5-1/4
R 340	1	6S124A63	RESISTOR	3900-5-1/4
R 341	1	6S124A72	RESISTOR	9100-5-1/4
R 342	1	6S124A80	RESISTOR	20K-5-1/4
R 343	1	6S124A73	RESISTOR	10K-5-1/4
S 301	1	TS85A	SWITCH,THERMAL	85 DEG C
TP301	1	09-80331A88	JACK,TIP	WHITE
TP302	1	09-80331A88	JACK,TIP	WHITE
TP303	1	09-80331A88	JACK,TIP	WHITE
TP304	1	09-80331A88	JACK,TIP	WHITE
TP305	1	09-80331A88	JACK,TIP	WHITE
TP306	1	09-80331A88	JACK,TIP	WHITE
TP307	1	09-80331A88	JACK,TIP	WHITE
U 301	1	51-80345A08	INTEGRATED CIRCUIT	LM341P-8.0 SCREENED
U 302	1	51-80345A01	INTEGRATED CIRCUIT	CA3140E SCREENED
U 303	1	51-80368A68	INTEGRATED CIRCUIT	MLM311P1 SCREENED
U 304	1	51-80345A01	INTEGRATED CIRCUIT	CA3140E SCREENED
U 305	1	51-80368A32	INTEGRATED CIRCUIT	MC14011BCP SCREENED
U 306	1	51-80345A24	INTEGRATED CIRCUIT	MC3420P SCREENED
VR301	1	48-86850C95	DIODE,ZENER	20V-5-.5
VR302	1	48-82256C38	DIODE,ZENER	9.1V
VR303	1	48-818459	DIODE,ZENER	6.8V
VR304	1	48-818459	DIODE,ZENER	6.8V
VR305	1	48-82256C25	DIODE,ZENER	12V-5-1/2

Figure 7-13. Low Voltage Power Supply Control Module A1A3 (RTP-4012A) Parts Location Diagram

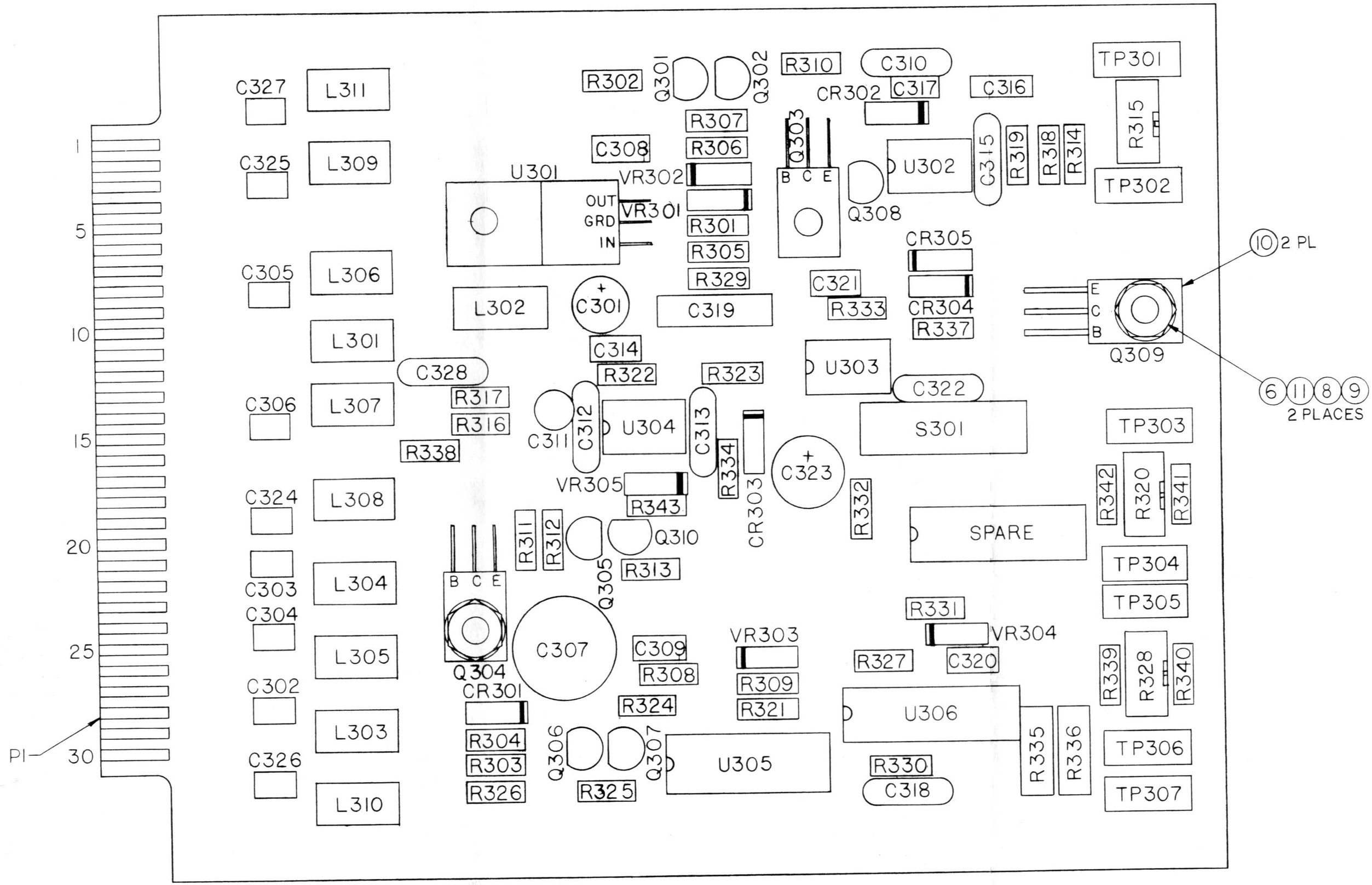

Figure 7-13. Low Voltage Power Supply Control Module A1A3 (RTP-4012A) Parts Location Diagram

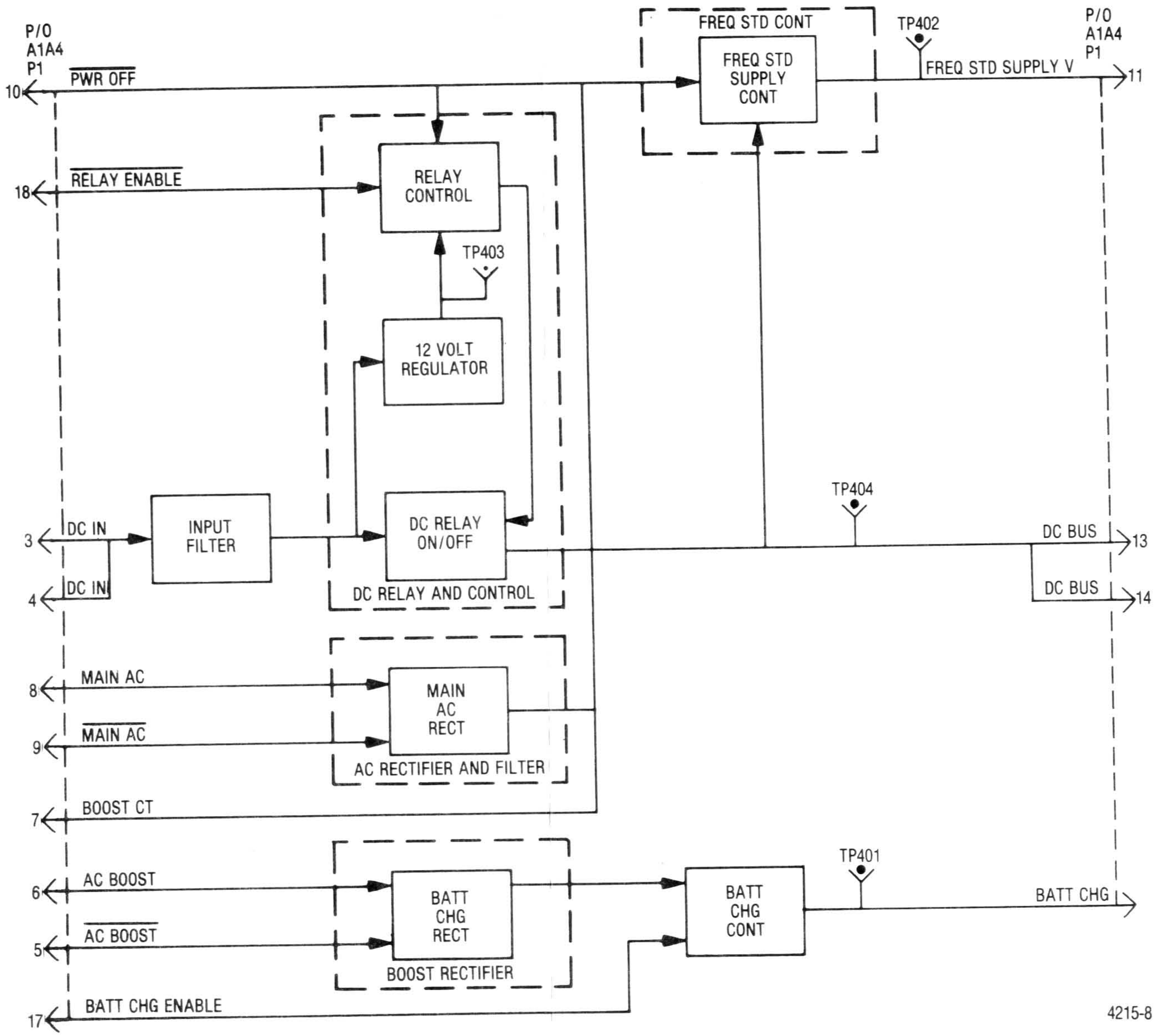

Figure 7-14. Low Voltage Power Supply Relay Module A1A4 Block Diagram

NOTES:

1. PARTIAL REFERENCE DESIGNATIONS ARE SHOWN. FOR COMPLETE DESIGNATION PREFIX WITH A1A4.

2. FOR REFERENCE DRAWINGS REFER TO:

3. UNLESS OTHERWISE SPECIFIED:
   ALL RESISTORS ARE IN OHMS, ± 5 PCT, 1/4 WATT.
   ALL CAPACITORS ARE IN UF.
   ALL INDUCTORS ARE IN UH.
   ALL VOLTAGES ARE DC.

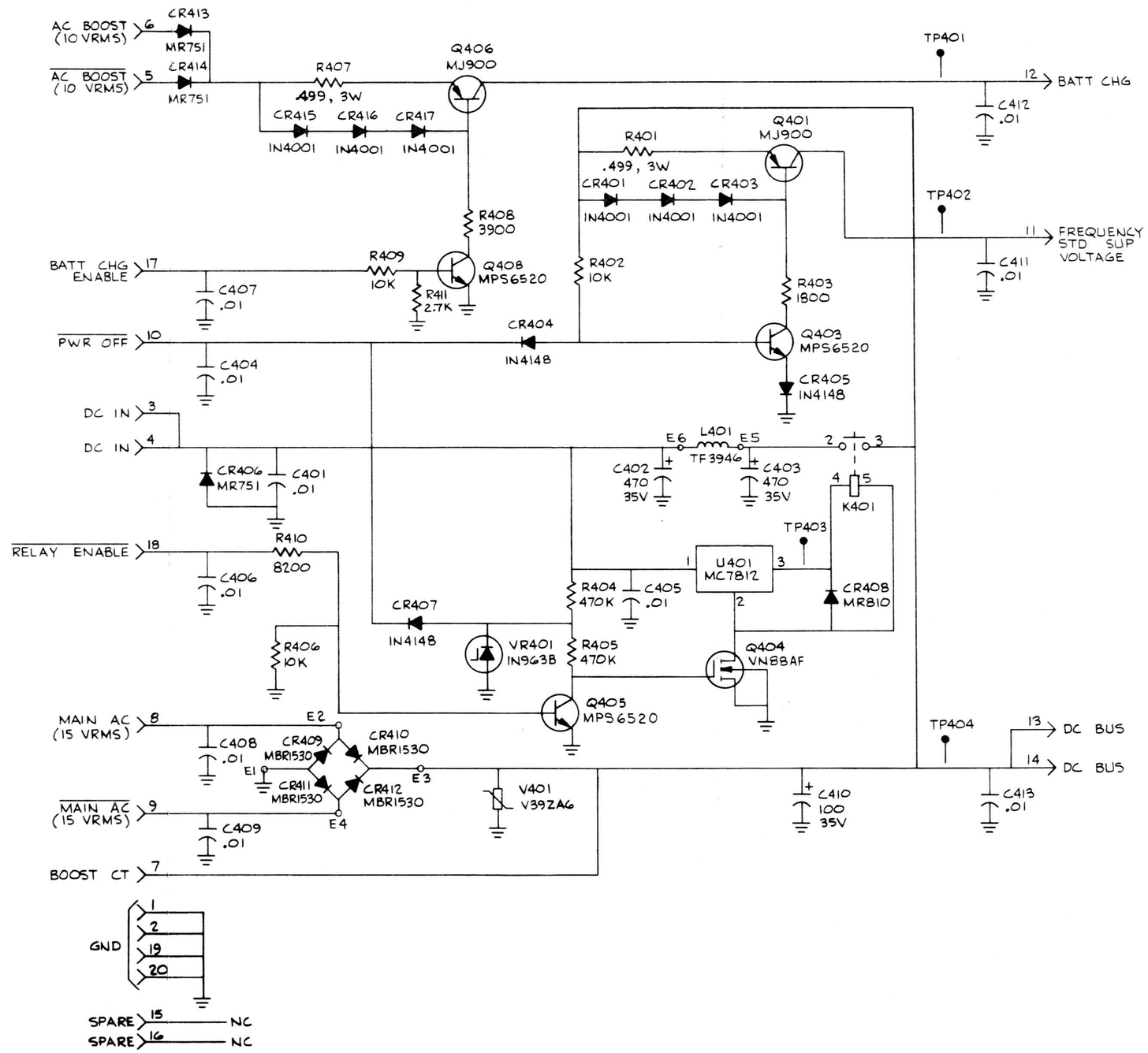

Figure 7-15. Low Voltage Power Supply Relay Module A1A4 Schematic Diagram

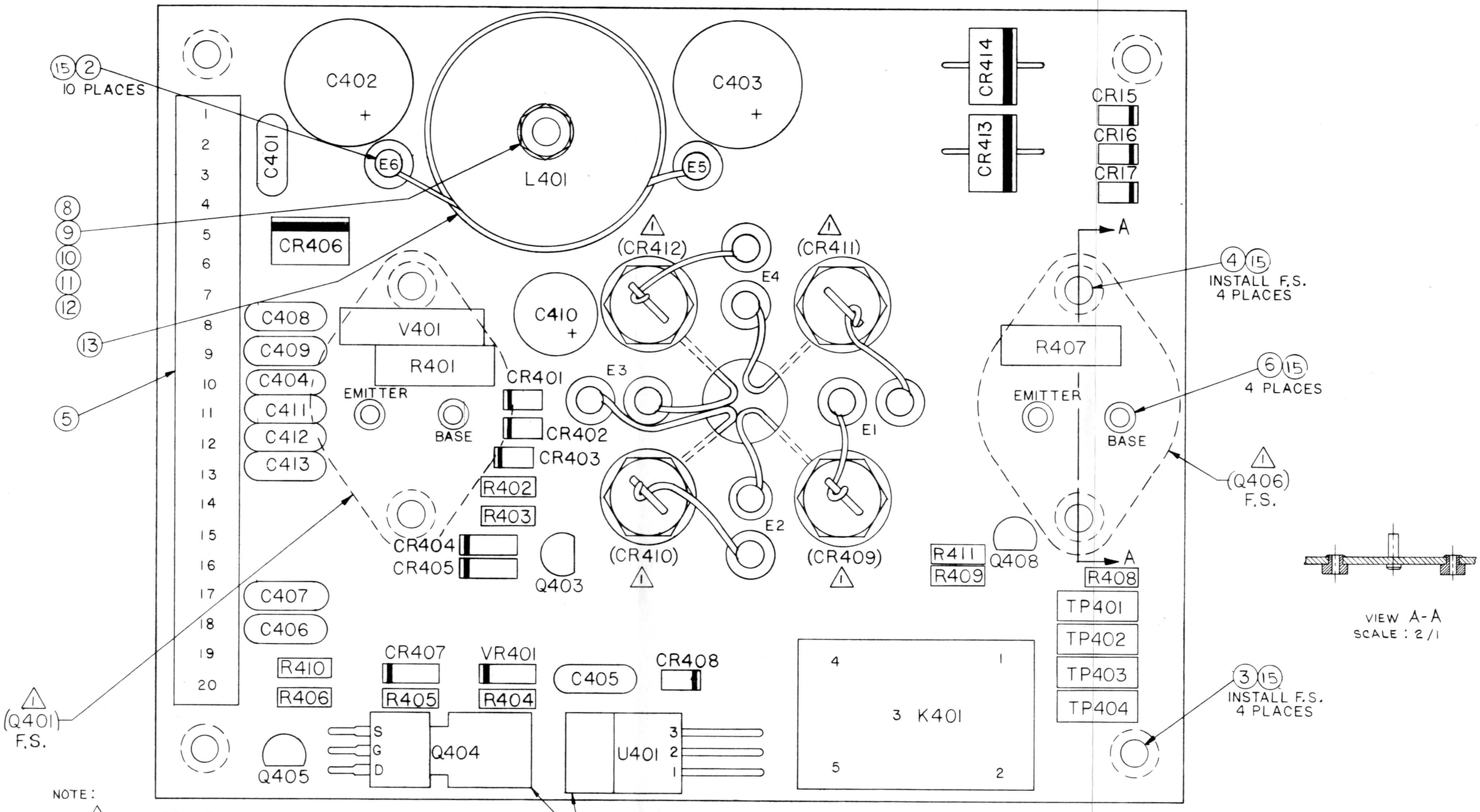

NOTE:

1. NOT PART OF THIS ASSEMBLY. SHOWN FOR CLARIFICATION ONLY.

3. FLANGE OF U401 MUST NOT CONTACT GROUND PLANE

Low Voltage Power Supply Relay Module A1A4 PWB

Figure 7-16. Low Voltage Power Supply Relay Module A1A4 (01-80305A68) Parts Location Diagram

Find No.	Qty. Req.	Part No.	Nomenclature	Part Value
R 404	1	6S124B14	RESISTOR	470K-5-1/4
R 405	1	6S124B14	RESISTOR	470K-5-1/4
R 406	1	6S124A73	RESISTOR	10K-5-1/4
R 407	1	6-80370A44	RESISTOR	.499-1-3
R 408	1	6S124A63	RESISTOR	3.9K-5-1/4
R 409	1	6S124A73	RESISTOR	10K-5-1/4
R 410	1	6S124A71	RESISTOR	8.2K-5-1/4
R 411	1	6S124A59	RESISTOR	2.7K-5-1/4
TP401	1	09-80331A88	JACK,TIP	WHITE
TP402	1	09-80331A88	JACK,TIP	WHITE
TP403	1	09-80331A88	JACK,TIP	WHITE
TP404	1	09-80331A88	JACK,TIP	WHITE
U 401	1	51-80368A67	INTEGRATED CIRCUIT	MC7812CT SCREENED
V 401	1	6-80346A21	VARISTOR	
VR401	1	48-82256C25	DIODE,ZENER	12V

Find No.	Qty. Req.	Part No.	Nomenclature	Part Value
001	1	84-P07866V001	PRINTED WIRING BOARD	
002	10	M55155/29-7	TERMINAL	
003	4	B1534-B-1/8-5	STANDOFF,THREADED	
004	4	B1534-B-3/32-5	STANDOFF,THREADED	
005	1	09-80331A91	CONNECTOR	
006	4	640206-1	JACK,PRINTED CIRCUIT	
007	AR	RTV3145	COMPOUND,SILICONE	
008	1	5607-106	WASHER,SHOULDER	
009	1	MS35206-232	SCREW,PH	.1380-32X.750
010	1	MS35338-41	WASHER,LOCK	.138
011	1	MS27183-5	WASHER,FLAT	.156
012	1	MS35649-262	NUT,HEX	.1380-32
013	1	14-80370A48	INSULATOR,INDUCTOR	
014	AR	SN63WRP3	SOLDER	
015	AR	SN96WRMAP3	SOLDER	
C 401	1	21D82428B59	CAPACITOR	.01UF-2080-200
C 402	1	23-80369A78	CAPACITOR	470UF-35V
C 403	1	23-80369A78	CAPACITOR	470UF-35V
C 404	1	21D82428B59	CAPACITOR	.01UF-2080-200
C 405	1	21D82428B59	CAPACITOR	.01UF-2080-200
C 406	1	21D82428B59	CAPACITOR	.01UF-2080-200
C 407	1	21D82428B59	CAPACITOR	.01UF-2080-200
C 408	1	21D82428B59	CAPACITOR	.01UF-2080-200
C 409	1	21D82428B59	CAPACITOR	.01UF-2080-200
C 410	1	23-80369A73	CAPACITOR	100UF-35V
C 411	1	21D82428B59	CAPACITOR	.01UF-2080-200
C 412	1	21D82428B59	CAPACITOR	.01UF-2080-200
C 413	1	21D82428B59	CAPACITOR	.01UF-2080-200
CR401	1	48-86850C47	DIODE	
CR402	1	48-86850C47	DIODE	
CR403	1	48-86850C47	DIODE	
CR404	1	48-84463K02	DIODE	
CR405	1	48-84463K02	DIODE	
CR406	1	48-80345A67	DIODE	100V
CR407	1	48-84463K02	DIODE	
CR408	1	48-80345A68	DIODE	
CR413	1	48-80345A67	DIODE	100V
CR414	1	48-80345A67	DIODE	100V
CR415	1	48-86850C47	DIODE	
CR416	1	48-86850C47	DIODE	
CR417	1	48-86850C47	DIODE	
K 401	1	80-80370A56	RELAY	
L 401	1	24-80369A57	CHOKE	
Q 403	1	48-80368A91	TRANSISTOR	MPS6520 SCREENED
Q 404	1	48-80345A58	TRANSISTOR	VN88AF SCREENED
Q 405	1	48-80368A91	TRANSISTOR	MPS6520 SCREENED
Q 408	1	48-80368A91	TRANSISTOR	MPS6520 SCREENED
R 401	1	6-80370A44	RESISTOR	.499-1-3
R 402	1	6S124A73	RESISTOR	10K-5-1/4
R 403	1	6S124A55	RESISTOR	1.8K-5-1/4

Figure 7-16. Low Voltage Power Supply Relay Module A1A4 (01-80305A68) Parts Location Diagram

Find No.	Qty. Req.	Part Nr	Nomenclature	Part Value
001	1	1-80305A67	RELAY PWB ASSEMBLY	
002	1	64-P07868V001	PLATE,MOUNTING RELAY	
003	2	14-15141A01	INSULATOR,MICA	
004	4	5607-82	WASHER,SHOULDER	
005	8	MS35206-215	SCREW,PH	.1120-40X.375
006	8	MS27183-3	WASHER,FL	.125
007	8	MS35338-40	WASHER,LK	.112
008	4	B52600F001	WASHER,MICA	
009	4	B-225-10X	TERMIAL,CRIMP INSUL	10
010	4	B51568F015	NUT,HEX	10-32
011	4	B51566F020	WASHER,LOCK	NO.10
012	4	5607-92	WASHER,SHOULDER	
013	AR		WIRE,ELEC	16 WHT
014	AR	SN63WRP3	SOLDER	
015	AR	11-14167A01	INK	BLACK
016	AR	G-642	COMPOUND,THERMAL	
CR409	1	48-80345A66	DIODE	
CR410	1	48-80345A66	DIODE	
CR411	1	48-80345A66	DIODE	
CR412	1	48-80345A66	DIODE	
Q 401	1	48-80368A89	TRANSISTOR	
Q 406	1	48-80368A89	TRANSISTOR	

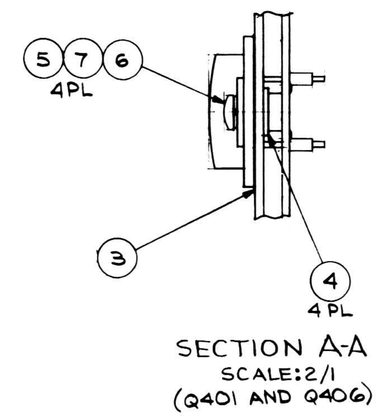

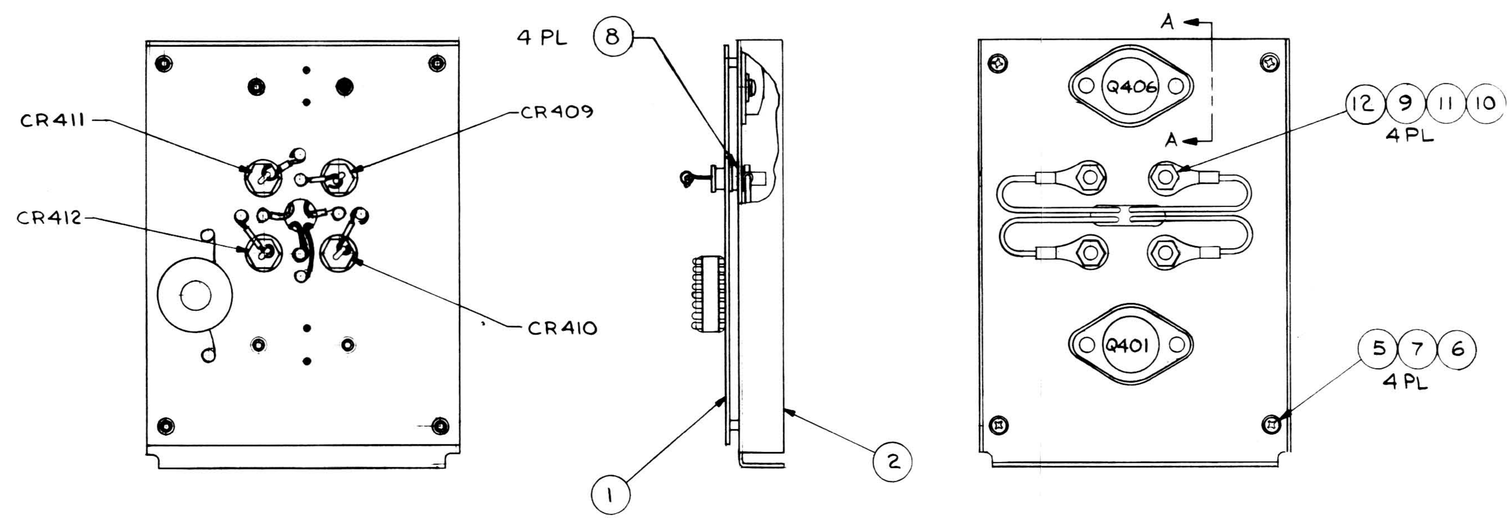

Low Voltage Power Supply Relay End Plate Assembly

Figure 7-16. Low Voltage Power Supply Relay Module A1A4 (01-80305A68) Parts Location Diagram

SECTION 8

SCOPE AMPLIFIER (A2)

8-1. General. The Scope Amplifier module contains the horizontal and vertical deflection amps, the horizontal timebase generator, focus and intensity control circuitry, and miscellaneous CRT bias adjustments. A block diagram of the Scope Amplifier module is shown in figure 8-1 with its schematic shown in figure 8-2.

8-2. Deflection Amplifiers. The vertical and horizontal deflection amplifiers are identical. The input signal is initially amplified and split into two signals 180° out of phase. Each of the two signals is then further amplified to become the CRT deflection plate signals. The amplifiers provide up to 200 volts peak-peak signal capability with a 1 MHz frequency bandwidth.

8-3. Horizontal Timebase Generator. The horizontal timebase generator provides calibrated sweep rates over a six decade range from 1μ sec to 100 msec per division. Sweep rate selection is from the processor via the SCOPE SWP CONT 0-7 signal lines. Veriner control over the sweep rate is via the SWP VERN VOLT input from the front panel. Sweep triggering is either the auto or normal mode as selected by the AUTO/NOR TRIG SEL line from the front panel. In the auto mode if the SYNC PRESENT input is high indicating no sync, the scope sweep is self triggered after a hold off time. If there is a sync present, the sweep will wait for a pulse on the TRIG PULSE line to start the sweep after the hold off time. For the normal trigger mode the sweep will always wait for a TRIG PULSE input.

8-4. A sweep cycle consists of two parts, the sweep and the hold off. During the sweep the CRT is unblanked via the SWP BLANKING line and the horizontal trace is made. At the end of the sweep the CRT is blanked and the hold off time begins. During the hold off time, which is equal to the sweep time, the sweep generator and trigger circuits are reset in preparation for the next sweep.

8-5. Horizontal Switching. The input to the horizontal deflection amp is selected between two sources. The INT HORIZ IN signal line provides the horizontal character sweep and the horizontal spectrum analyzer sweep. The other source is the scope mode signal path from the horizontal positioning suming amp. The scope mode signal is either the output of the Horizontal Timebase Generator or the EXT HORIZ INPUT from the front panel. Selection between internal horizontal and scope mode horizontal inputs is via the SCOPE MODE EN line from the processor. Selection between the two scope mode signals is via the EXT HORIZ EN line.

8-6. Intensity Control. A crossover network is used to provide CRT Z-axis modulation from DC to 1 MHz. The INTEN LVL signal from the front panel control is gated with the SCOPE Z-AXIS signal by the Intensity Level Gate. The gated signal is sumed with the HV REF and INTEN SMPL VOLT signals to provide the INTEN TV signal. The INTEN TV (Intensity Tracking Voltage) is the low frequency control path which drives the intensity optoisolator in the High Voltage Supply.

8-7. The high frequency modulation path is via the Z-Axis Modulator circuit. line. line. The resulting CRT Z-AXIS signal is capacitively coupled to the CRT grid.

8-8. Focus Control. The FOCUS TV (Focus Tracking Voltage) signal is obtained by comparing the FOCUS LEVEL control line to the FOCUS SAMPLE VOLT signal. The tracking voltage signal drives an optoisolator circuit in the High Voltage Supply which controls the CRT focus voltage.

8-9. Astigmatism, Geometry, and Trace Rotation. These three CRT alignment controls are obtained from the respective wipers of three potentiometers. Each potentiometer is connected between supply voltages equal to the adjustment range required.

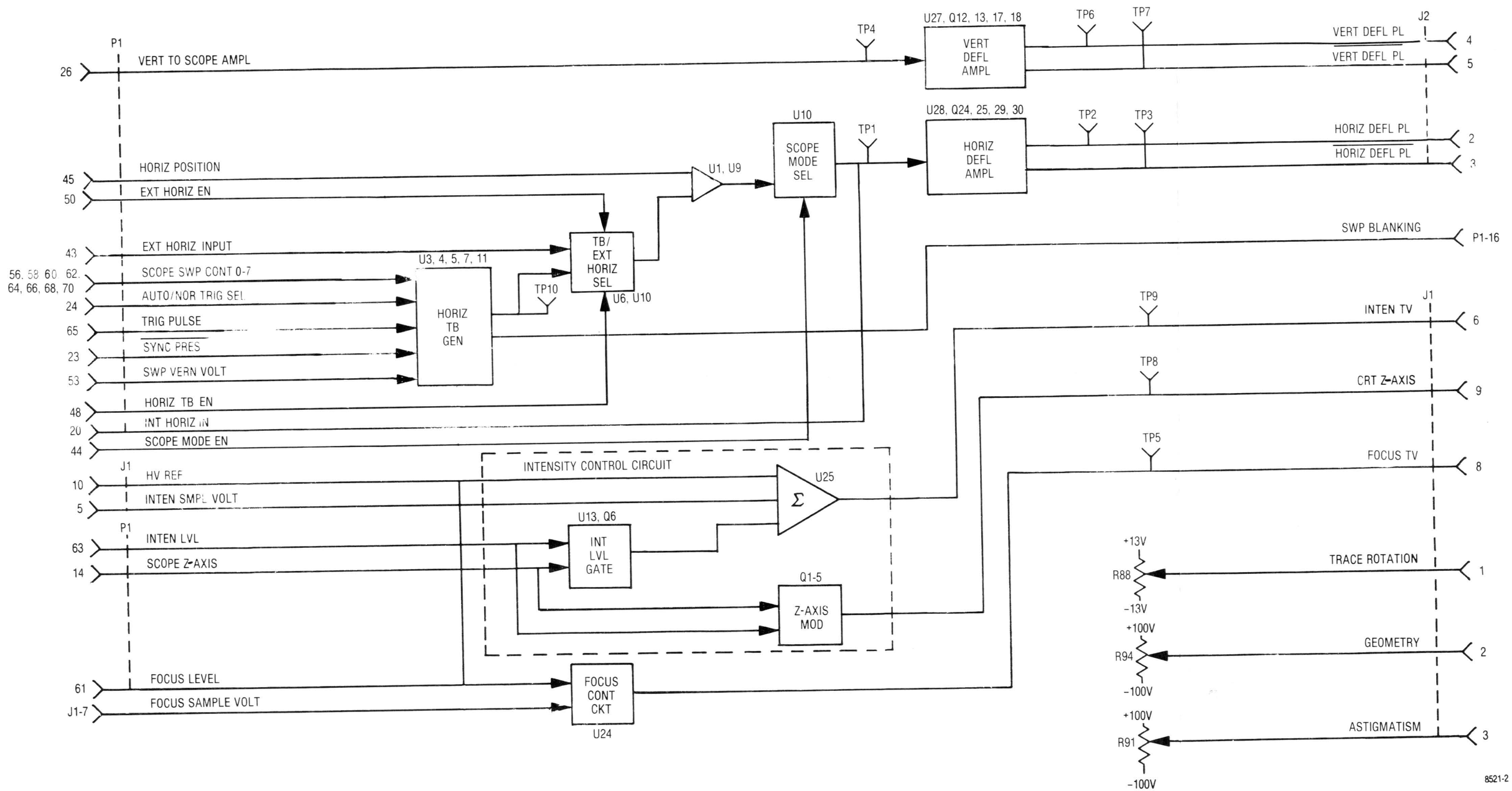

Figure 8-1. Vertical/Horizontal Scope Amplifier A2 Block Diagram

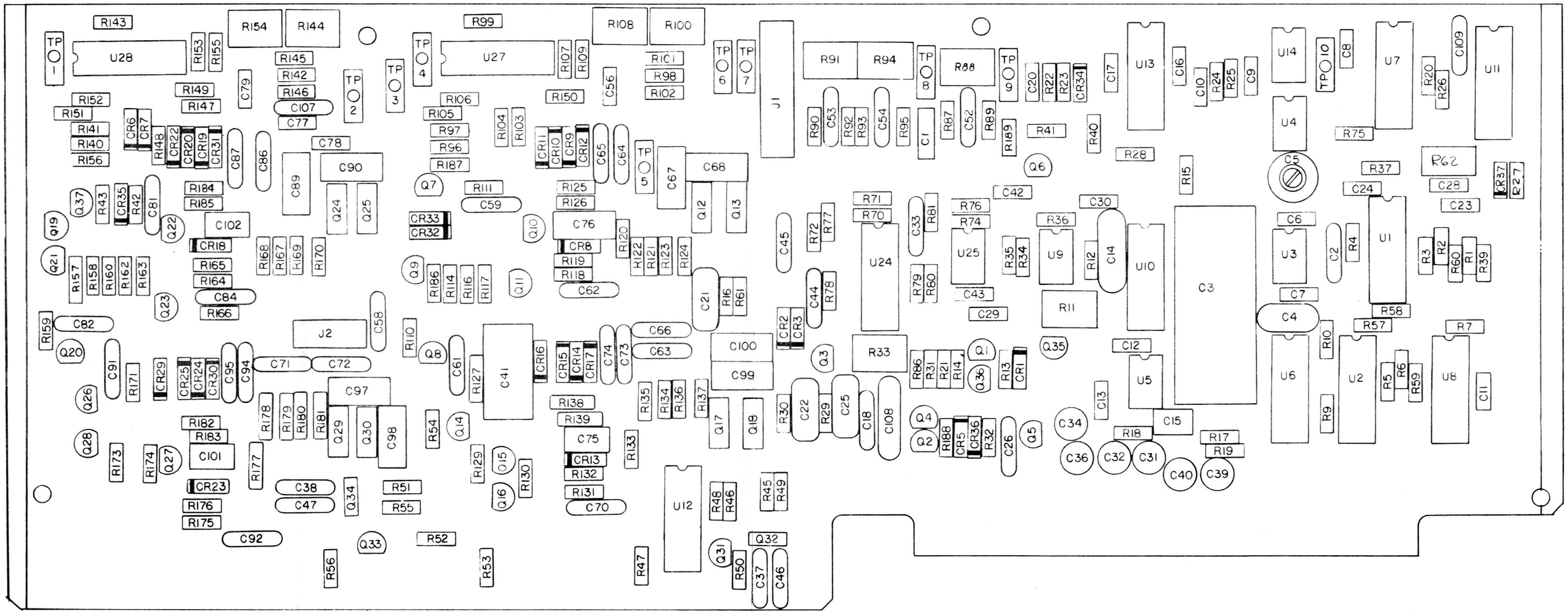

Figure 8-3. Vertical/Horizontal Scope Amplifier Module A2 (RTC-4007B) Parts Location Diagram

Find No.	Qty. Req.	Part No.	Nomenclature	Part Value
		RTC-4007B	SCOPE AMPLIFIER	
001	1	84-80335A14	PWB, SCOPE AMPL	
002	AR	SN63WRMAP3	SOLDER	
003	AR	11-14167A01	INK	BLACK
004	2	26-80346A44	HEAT SINK,TRANSISTOR	
005	2	42-P00317N001	BLOCK,TRANSISTOR MOUN	
006	4	NAS662-2-4	SCREW	2-56X1/4
007	2	MS35206-215	SCREW	4-40X.375
008	2	MS35338-40	WASHER,LOCK	NO.4
009	2	MS35649-242	NUT,HEX	4-40
010	2	33-14232A10	IDENTIFICATION PLATE	
011	AR		WIRE	26
012	10	09-80331A88	JACK,TIP	WHITE
C 001	1	08C82789H01	CAPACITOR	2200PF-10-250
C 002	1	21D82428B59	CAPACITOR	.01UF-2080-200
C 003	1	08-83445B68	CAPACITOR	.215UF-1
C 004	1	21D84494B46	CAPACITOR	180PF-3-500
C 005	1	20C82399D07	CAPACITOR,VARIABLE	15-60PF
C 006	1	21-80369A82	CAPACITOR	.1UF-20-100
C 007	1	21-80369A82	CAPACITOR	.1UF-20-100
C 008	1	21-80369A82	CAPACITOR	.1UF-20-100
C 009	1	21-80369A82	CAPACITOR	.1UF-20-100
C 010	1	21-80369A82	CAPACITOR	.1UF-20-100
C 011	1	21-80369A82	CAPACITOR	.1UF-20-100
C 012	1	21-80369A82	CAPACITOR	.1UF-20-100
C 013	1	21-80369A82	CAPACITOR	.1UF-20-100
C 014	1	08D82096J08	CAPACITOR	.022UF-10-250
C 015	1	21D82187B08	CAPACITOR	220PF-10-500
C 016	1	21-80369A82	CAPACITOR	.1UF-20-100
C 017	1	21-80369A82	CAPACITOR	.1UF-20-100
C 018	1	21D82428B59	CAPACITOR	.01UF-2080-200
C 020	1	21-80369A82	CAPACITOR	.1UF-20-100
C 021	1	21D84494B01	CAPACITOR	51PF-5-500
C 022	1	21D84494B46	CAPACITOR	180PF-3-500
C 023	1	21-80369A82	CAPACITOR	.1UF-20-100
C 024	1	21-80369A82	CAPACITOR	.1UF-20-100
C 025	1	21D84494B07	CAPACITOR	150PF-5-500
C 026	1	21D82428B59	CAPACITOR	.01UF-2080-200
C 028	1	21-80369A82	CAPACITOR	.1UF-20-100
C 029	1	21-80369A82	CAPACITOR	.1UF-20-100
C 030	1	21-80369A82	CAPACITOR	.1UF-20-100
C 031	1	23D84665F01	CAPACITOR	10UF-25V
C 032	1	23D84665F01	CAPACITOR	10UF-25V
C 033	1	21D82428B59	CAPACITOR	.01UF-2080-200
C 034	1	23D84665F01	CAPACITOR	10UF-25V
C 036	1	23D84665F01	CAPACITOR	10UF-25V
C 037	1	21D82428B59	CAPACITOR	.01UF-2080-200
C 038	1	21D82428B59	CAPACITOR	.01UF-2080-200
C 039	1	23D84665F01	CAPACITOR	10UF-25V
C 040	1	23D84665F01	CAPACITOR	10UF-25V
C 041	1	23D82256J08	CAPACITOR	22UF-40V
C 042	1	21-80369A82	CAPACITOR	.1UF-20-100
C 043	1	21-80369A82	CAPACITOR	.1UF-20-100
C 044	1	21D82428B59	CAPACITOR	.01UF-2080-200
C 045	1	21D82428B59	CAPACITOR	.01UF-2080-200
C 046	1	21D82428B59	CAPACITOR	.01UF-2080-200
C 047	1	21D82428B59	CAPACITOR	.01UF-2080-200
C 052	1	21D82428B59	CAPACITOR	.01UF-2080-200
C 053	1	21D82428B59	CAPACITOR	.01UF-2080-200
C 054	1	21D82428B59	CAPACITOR	.01UF-2080-200
C 056	1	21-80369A82	CAPACITOR	.1UF-20-100
C 058	1	21D82428B59	CAPACITOR	.01UF-2080-200
C 059	1	21D82428B59	CAPACITOR	.01UF-2080-200

Find No.	Qty. Req.	Part No.	Nomenclature	Part Value
C 061	1	21D82428B59	CAPACITOR	.01UF-2080-200
C 062	1	21D82428B59	CAPACITOR	.01UF-2080-200
C 063	1	21D82428B59	CAPACITOR	.01UF-2080-200
C 064	1	21D82428B59	CAPACITOR	.01UF-2080-200
C 065	1	21D82428B59	CAPACITOR	.01UF-2080-200
C 066	1	21D82428B59	CAPACITOR	.01UF-2080-200
C 067	1	21-P07954V001	CAPACITOR,MODIFIED	560PF-10-500
C 068	1	21-P07954V001	CAPACITOR,MODIFIED	560PF-10-500
C 070	1	21D82428B59	CAPACITOR	.01UF-2080-200
C 071	1	21D82428B59	CAPACITOR	.01UF-2080-200
C 072	1	21D82428B59	CAPACITOR	.01UF-2080-200
C 073	1	21D82428B59	CAPACITOR	.01UF-2080-200
C 074	1	21D82428B59	CAPACITOR	.01UF-2080-200
C 075	1	21-14032G97	CAPACITOR	2PF-.5PF-500
C 076	1	21-14032G97	CAPACITOR	2PF-.5PF-500
C 077	1	21-80369A82	CAPACITOR	.1UF-20-100
C 078	1	21-80369A82	CAPACITOR	.1UF-20-100
C 079	1	21-80369A82	CAPACITOR	.1UF-20-100
C 081	1	21D82428B59	CAPACITOR	.01UF-2080-200
C 082	1	21D82428B59	CAPACITOR	.01UF-2080-200
C 084	1	21D82428B59	CAPACITOR	.01UF-2080-200
C 086	1	21D82428B59	CAPACITOR	.01UF-2080-200
C 087	1	21D82428B59	CAPACITOR	.01UF-2080-200
C 089	1	21-P07954V001	CAPACITOR,MODIFIED	560PF-10-500
C 090	1	21-P07954V001	CAPACITOR,MODIFIED	560PF-10-500
C 091	1	21D82428B59	CAPACITOR	.01UF-2080-200
C 092	1	21D82428B59	CAPACITOR	.01UF-2080-200
C 094	1	21D82428B59	CAPACITOR	.01UF-2080-200
C 095	1	21D82428B59	CAPACITOR	.01UF-2080-200
C 097	1	21-P07954V001	CAPACITOR,MODIFIED	560PF-10-500
C 098	1	21-P07954V001	CAPACITOR,MODIFIED	560PF-10-500
C 099	1	21-P07954V001	CAPACITOR,MODIFIED	560PF-10-500
C 100	1	21-P07954V001	CAPACITOR,MODIFIED	560PF-10-500
C 101	1	21-14032G97	CAPACITOR	2PF-.5PF-500
C 102	1	21-14032G97	CAPACITOR	2PF-.5PF-500
C 107	1	21D82428B59	CAPACITOR	.01UF-2080-200
C 108	1	21-80370A05	CAPACITOR	.1UF-10-100
C 109	1	21D82428B36	CAPACITOR	2000PF-10-200
CR001	1	48-80345A85	DIODE,ZENER	75V-5-.5
CR002	1	48-84463K02	DIODE	
CR003	1	48-80345A95	DIODE	
CR005	1	48-84463K02	DIODE	
CR006	1	48-84463K02	DIODE	
CR007	1	48-84463K02	DIODE	
CR008	1	48-84463K02	DIODE	
CR009	1	48-80345A82	DIODE,ZENER	33V-5-.5
CR010	1	48-80345A83	DIODE,ZENER	39V-5-.5
CR011	1	48-80345A83	DIODE,ZENER	59V-5-.5
CR012	1	48-80345A84	DIODE, ZENER	68V-5-.5
CR013	1	48-84463K02	DIODE	
CR014	1	48-80345A82	DIODE,ZENER	33V-5-.5
CR015	1	48-80345A83	DIODE,ZENER	39V-5-.5
CR016	1	48-80345A83	DIODE,ZENER	39V-5-.5
CR017	1	48-80345A84	DIODE, ZENER	68V-5-.5
CR018	1	48-84463K02	DIODE	
CR019	1	48-80345A82	DIODE,ZENER	33V-5-.5
CR020	1	48-80345A83	DIODE,ZENER	39V050.5
CR022	1	48-80345A83	DIODE,ZENER	39V-5-.5
CR023	1	48-84463K02	DIODE	
CR024	1	48-80345A82	DIODE,ZENER	33V-5-.5
CR025	1	48-80345A83	DIODE,ZENER	39V-5-.5
CR029	1	48-80345A83	DIODE,ZENER	39V-5-.5
CR030	1	48-80345A84	DIODE, ZENER	68V-5-.5
CR031	1	48-80345A84	DIODE, ZENER	68V-5-.5

Find No.	Qty. Req.	Part No.	Nomenclature	Part Value
CR032	1	48-84463K02	DIODE	
CR033	1	48-84463K02	DIODE	
CR034	1	48-84463K02	DIODE	
CR035	1	48-84463K02	DIODE	
CR036	1	48-84463K02	DIODE	
CR037	1	48-84463K02	DIODE	
J 001	1	1-640456-0	CONNECTOR	
J 002	1	640456-5	CONNECTOR	
Q 001	1	48-80345A49	TRANSISTOR	MPS-D01 SCREENED
Q 002	1	48-80345A51	TRANSISTOR	
Q 003	1	48-80345A51	TRANSISTOR	
Q 004	1	48-80345A52	TRANSISTOR	
Q 005	1	48-80345A51	TRANSISTOR	
Q 006	1	48-80368A92	TRANSISTOR	MPS6519 SCREENED
Q 007	1	48-80368A92	TRANSISTOR	MPS6519 SCREENED
Q 008	1	48-80368A92	TRANSISTOR	MPS6519 SCREENED
Q 009	1	48-80345A51	TRANSISTOR	
Q 010	1	48-80345A51	TRANSISTOR	
Q 011	1	48-80368A91	TRANSISTOR	MPS6520 SCREENED
Q 012	1	48-80341A48	TRANSISTOR	MPS-U60 SCREENED
Q 013	1	48-80341A47	TRANSISTOR	MPS-U10 SCREENED
Q 014	1	48-80345A51	TRANSISTOR	
Q 015	1	48-80345A51	TRANSISTOR	
Q 016	1	48-80368A91	TRANSISTOR	MPS6520 SCREENED
Q 017	1	48-80341A48	TRANSISTOR	MPS-U60 SCREENED
Q 018	1	48-80341A47	TRANSISTOR	MPS-U10 SCREENED
Q 019	1	48-80368A92	TRANSISTOR	MPS6519 SCREENED
Q 020	1	48-80368A92	TRANSISTOR	MPS6519 SCREENED
Q 021	1	48-80345A51	TRANSISTOR	
Q 022	1	48-80345A51	TRANSISTOR	
Q 023	1	48-80368A91	TRANSISTOR	MPS6520 SCREENED
Q 024	1	48-80341A48	TRANSISTOR	MPS-U60 SCREENED
Q 025	1	48-80341A47	TRANSISTOR	MPS-U10 SCREENED
Q 026	1	48-80345A51	TRANSISTOR	
Q 027	1	48-80345A51	TRANSISTOR	
Q 028	1	48-80368A91	TRANSISTOR	MPS6520 SCREENED
Q 029	1	48-80341A48	TRANSISTOR	MPS-U60 SCREENED
Q 030	1	48-80341A47	TRANSISTOR	MPS-U10 SCREENED
Q 031	1	48-80345A49	TRANSISTOR	MPS-D01 SCREENED
Q 032	1	48-80345A14	TRANSISTOR	
Q 033	1	48-80341A46	TRANSISTOR	MPS-D51 SCREENED
Q 034	1	48-80345A45	TRANSISTOR	
Q 035	1	48-80345A49	TRANSISTOR	MPS-D01 SCREENED
Q 036	1	48-80345A49	TRANSISTOR	MPS-D01 SCREENED
Q 037	1	48-80368A91	TRANSISTOR	MPS6520 SCREENED
R 001	1	06D83175C88	RESISTOR	6.98K-1-1/4
R 002	1	6-10621B70	RESISTOR	562-1-1/8
R 003	1	6-10621D88	RESISTOR	100K-1-1/8
R 004	1	6-10621D88	RESISTOR	100K-1-1/8
R 005	1	6-10621E77	RESISTOR	825K-1-1/8
R 006	1	06D83175C74	RESISTOR	82.5K-1-1/4
R 007	1	06D82185J25	RESISTOR	8.25K-1-1/4
R 009	1	06D83175C90	RESISTOR	8.06K-1-1/4
R 010	1	06D83175C97	RESISTOR	4.75K-1-1/4
R 011	1	18D83452F11	RESISTOR,VARIABLE	5K
R 012	1	6S124A86	RESISTOR	36K-5-1/4
R 013	1	6S124B04	RESISTOR	180K-5-1/4
R 014	1	6S124A89	RESISTOR	47K-5-1/4
R 015	1	6S124A73	RESISTOR	10K-5-1/4
R 016	1	6S124A73	RESISTOR	10K-5-1/4
R 017	1	6S124B38	RESISTOR	4.7M-5-1/4
R 018	1	6S124A71	RESISTOR	8.2K-5-1/4
R 019	1	6S124A95	RESISTOR	82K-5-1/4

Figure 8-3. Vertical/Horizontal Scope Amplifier Module A2 (RTC-4007B) Parts Location Diagram

NOTES:

1. PARTIAL REFERENCE DESIGNATIONS ARE SHOWN. FOR COMPLETE DESIGNATION PREFIX WITH A2.
2. FOR REFERENCE DRAWINGS REFER TO: ASSEMBLY 01-P004-3N.
3. UNLESS OTHERWISE SPECIFIED: ALL RESISTORS ARE IN OHMS 5 PCT, 1/4 WATT. ALL CAPACITORS ARE IN UF.

   ALL VOLTAGES ARE IN DC.

4. RESISTOR VALUE MAY BE SELECTED IN TEST. VALUE SHOWN IS NOMINAL.

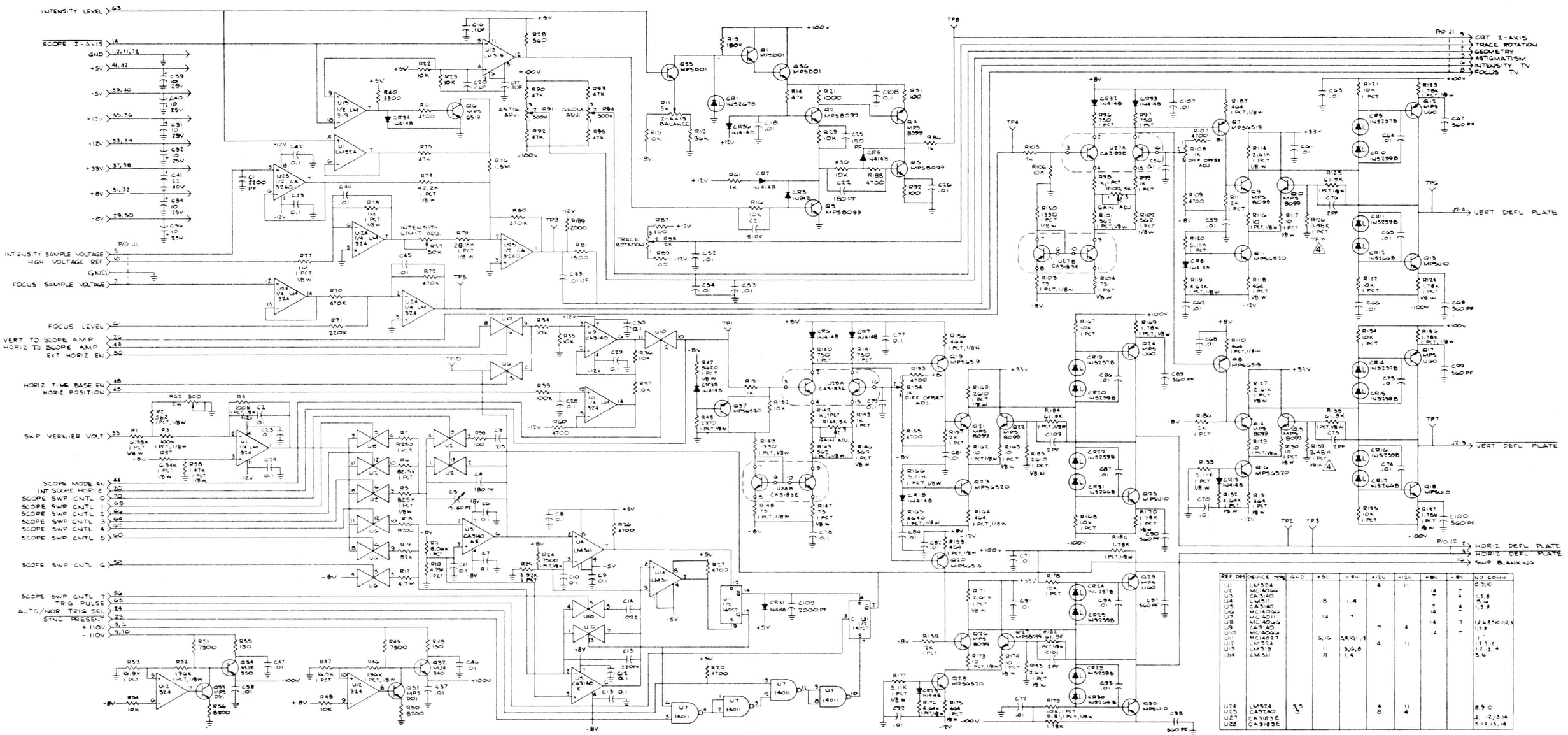

REF DES	DEVICE TYPE	GND	+5V	-5V	+12V	-12V	+8V	-8V	NO CONN
U1	LM324				4	11			8,9,10
U2	MC4066						14	7	1
U3	CA3140						7	4	1,5,8
U4	LM311		8	1,4					5,6
U5	CA3140						7	4	1,5,8
U6	MC4066						14		1
U7	MC4011		14	7					
U8	MC4066						14	7	1
U9	CA3140				7	4			1,5,8
U10	MC4066						14	7	1
U11	MC14027		6,16	8,9,11,13					1
U12	LM324				4	11			1,7,13,14
U13	LM319		11	3,6,8					1,2,3,4
U14	LM311		8	1,4					5,6
U24	LM324	3,5			4	11			8,9,10
U25	CA3240	3			8	4			
U27	CA3183E								5,12,13,14
U28	CA3183E								5,12,13,14

Figure 8-2. Vertical/Horizontal Scope Amplifier A2 Schematic Diagram

Find No.	Qty. Req.	Part No.	Nomenclature	Part Value
R 020	1	6S124A65	RESISTOR	4.7K-5-1/4
R 021	1	6S124A49	RESISTOR	1K-5-1/4
R 022	1	6S124A73	RESISTOR	10K-5-1/4
R 023	1	6S124A73	RESISTOR	10K-5-1/4
R 024	1	6-10621C79	RESISTOR	7.5K-1-1/8
R 025	1	06D82185J33	RESISTOR	3.92K-1-1/4
R 026	1	6S124A65	RESISTOR	4.7K-5-1/4
R 027	1	6S124A65	RESISTOR	4.7K-5-1/4
R 028	1	6S124A43	RESISTOR	560-5-1/4
R 029	1	6S124A73	RESISTOR	10K-5-1/4
R 030	1	6S124A73	RESISTOR	10K-5-1/4
R 031	1	6S124A25	RESISTOR	100-5-1/4
R 032	1	6S124A25	RESISTOR	100-5-1/4
R 033	1	18D83452F17	RESISTOR,VARIABLE	50K
R 034	1	6S124A73	RESISTOR	10K-5-1/4
R 035	1	6S124A73	RESISTOR	10K-5-1/4
R 036	1	6S124A73	RESISTOR	10K-5-1/4
R 037	1	6S124A73	RESISTOR	10K-5-1/4
R 039	1	6S124A97	RESISTOR	100K-5-1/4
R 040	1	6S124A61	RESISTOR	3.3K-5-1/4
R 041	1	6S124A65	RESISTOR	4.7K-5-1/4
R 042	1	6-10621C67	RESISTOR	5620-1-1/8
R 043	1	6-10621C31	RESISTOR	2370-1-1/8
R 045	1	6S124A70	RESISTOR	7.5K-5-1/4
R 046	1	6-10621E17	RESISTOR	196K-1-1/8
R 047	1	06D83175C21	RESISTOR	16.9K-1-1/4
R 048	1	6S124A73	RESISTOR	10K-5-1/4
R 049	1	6S124A29	RESISTOR	150-5-1/4
R 050	1	6S124A71	RESISTOR	8.2K-5-1/4
R 051	1	6S124A70	RESISTOR	7.5K-5-1/4
R 052	1	6-10621E17	RESISTOR	196K-1-1/8
R 053	1	06D83175C21	RESISTOR	16.9K-1-1/4
R 054	1	6S124A73	RESISTOR	10K-5-1/4
R 055	1	6S124A29	RESISTOR	150-5-1/4
R 056	1	6S124A71	RESISTOR	8.2K-5-1/4
R 057	1	6-10621D72	RESISTOR	6340-1-1/8
R 058	1	6-10621C11	RESISTOR	1.47K-1-1/8
R 059	1	6S124A25	RESISTOR	100-5-1/4
R 060	1	6S124A65	RESISTOR	4.7K-5-1/4
R 061	1	6S124A49	RESISTOR	1K-5-1/4
R 062	1	18D83452F07	RESISTOR,VARIABLE	500-20-1/2
R 070	1	6S124B14	RESISTOR	470K-5-1/4
R 071	1	6S124B06	RESISTOR	220K-5-1/4
R 072	1	6S124B14	RESISTOR	470K-5-1/4
R 074	1	6-10621D52	RESISTOR	42.2K-1-1/8
R 075	1	6S124A89	RESISTOR	47K-5-1/4
R 076	1	6S124B26	RESISTOR	1.5M-5-1/4
R 077	1	6-10621E85	RESISTOR	1M-1-1/8
R 078	1	6-10621E85	RESISTOR	1M-1-1/8
R 079	1	6-10621D36	RESISTOR	28.7K-1-1/8
R 080	1	6S124B14	RESISTOR	470K-5-1/4
R 081	1	6S124A53	RESISTOR	1.5K-5-1/4
R 086	1	6S124A49	RESISTOR	1K-5-1/4
R 087	1	6S124A25	RESISTOR	100-5-1/4
R 088	1	18D83452F01	RESISTOR,VARIABLE	2K
R 089	1	6S124A25	RESISTOR	100-5-1/4
R 090	1	6S124A89	RESISTOR	47K-5-1/4
R 091	1	18D83452F23	RESISTOR,VARIABLE	500K
R 092	1	6S124A89	RESISTOR	47K-5-1/4
R 093	1	6S124A89	RESISTOR	47K-5-1/4
R 094	1	18D83452F23	RESISTOR,VARIABLE	500K
R 095	1	6S124A89	RESISTOR	47K-5-1/4
R 096	1	06D84444A18	RESISTOR	750-1-1/4
R 097	1	06D84444A18	RESISTOR	750-1-1/4

Find No.	Qty. Req.	Part No.	Nomenclature	Part Value
R 098	1	06D84444A64	RESISTOR	1K-1-1/4
R 099	1	06D84444A64	RESISTOR	1K-1-1/4
R 100	1	18D83452F11	RESISTOR,VARIABLE	5K
R 101	1	6-10621B70	RESISTOR	562-1-1/8
R 102	1	6-10621B70	RESISTOR	562-1-1/8
R 103	1	6-10621A85	RESISTOR	75-1-1/8
R 104	1	6-10621A85	RESISTOR	75-1-1/8
R 105	1	6S124A49	RESISTOR	1K-5-1/4
R 106	1	6S124A73	RESISTOR	10K-5-1/4
R 107	1	6S124A65	RESISTOR	4.7K-5-1/4
R 108	1	18D83452F09	RESISTOR,VARIABLE	1K
R 109	1	6S124A65	RESISTOR	4.7K-5-1/4
R 110	1	6-10621B62	RESISTOR	464-1-1/8
R 111	1	06D82672B62	RESISTOR	2K-1-1/4
R 114	1	6-10621C35	RESISTOR	2610-1-1/8
R 116	1	6-10621A01	RESISTOR	10-1-1/8
R 117	1	6-10621A01	RESISTOR	10-1-1/8
R 118	1	6-10621B62	RESISTOR	464-1-1/8
R 119	1	6-10621C59	RESISTOR	4640-1-1/8
R 120	1	6-10621C63	RESISTOR	5.11K-1-1/8
R 121	1	06D83175C03	RESISTOR	10K-1-1/4
R 122	1	06D83175C03	RESISTOR	10K-1-1/4
R 123	1	6-20621C19	RESISTOR	1780-1-1/8
R 124	1	6-20621C19	RESISTOR	1780-1-1/8
R 125	1	6-10621D68	RESISTOR	61.9K-1-1/8
R 126	S01	6-10621C55	RESISTOR	4.22K-1-1/8
R 126	S01	6-10621C31	RESISTOR	2370-1-1/8
R 126	S01	6-10621C35	RESISTOR	2610-1-1/8
R 126	S01	6-10621C39	RESISTOR	2870-1-1/8
R 126	S01	6-10621C42	RESISTOR	3090-1-1/8
R 126	S01	6-10621C43	RESISTOR	3160-1-1/8
R 126	1	6-10621C47	RESISTOR	3480-1-1/8 NOMINAL
R 126	S01	6-10621C51	RESISTOR	3830-1-1/8
R 126	S01	6-10621C53	RESISTOR	4020-1-1/8
R 126	S01	6-10621C59	RESISTOR	4640-1-1/8
R 126	S01	6-10621C63	RESISTOR	5110-1-1/8
R 127	1	6-10621C35	RESISTOR	2610-1-1/8
R 129	1	6-10621A01	RESISTOR	10-1-1/8
R 130	1	6-10621A01	RESISTOR	10-1-1/8
R 131	1	6-10621B62	RESISTOR	464-1-1/8
R 132	1	6-10621C59	RESISTOR	4640-1-1/8
R 133	1	6-10621C63	RESISTOR	5.11K-1-1/8
R 134	1	06D83175C03	RESISTOR	10K-1-1/4
R 135	1	06D83175C03	RESISTOR	10K-1-1/4
R 136	1	6-20621C19	RESISTOR	1780-1-1/8
R 137	1	6-20621C19	RESISTOR	1780-1-1/8
R 138	1	6-10621D68	RESISTOR	61.9K-1-1/8
R 139	S01	6-10621C55	RESISTOR	4.22K-1-1/8
R 139	S01	6-10621C31	RESISTOR	2370-1-1/8
R 139	S01	6-10621C35	RESISTOR	2610-1-1/8
R 139	S01	6-10621C39	RESISTOR	2870-1-1/8
R 139	S01	6-10621C42	RESISTOR	3090-1-1/8
R 139	S01	6-10621C43	RESISTOR	3160-1-1/8
R 139	1	6-10621C47	RESISTOR	3480-1-1/8 NOMINAL
R 139	S01	6-10621C51	RESISTOR	3830-1-1/8
R 139	S01	6-10621C53	RESISTOR	4020-1-1/8
R 139	S01	6-10621C59	RESISTOR	4640-1-1/8
R 139	S01	6-10621C63	RESISTOR	5110-1-1/8
R 140	1	06D84444A18	RESISTOR	750-1-1/4
R 141	1	06D84444A18	RESISTOR	750-1-1/4
R 142	1	06D84444A64	RESISTOR	1K-1-1/4
R 143	1	06D84444A64	RESISTOR	1K-1-1/4
R 144	1	18D83452F11	RESISTOR,VARIABLE	5K

Find No.	Qty. Req.	Part No.	Nomenclature	Part Value
R 145	1	6-10621B70	RESISTOR	562-1-1/8
R 146	1	6-10621B70	RESISTOR	562-1-1/8
R 147	1	6-10621A85	RESISTOR	75-1-1/8
R 148	1	6-10621A85	RESISTOR	75-1-1/8
R 149	1	6-10621C07	RESISTOR	1330-1-1/8
R 150	1	6-10621C07	RESISTOR	1330-1-1/8
R 151	1	6S124A49	RESISTOR	1K-5-1/4
R 152	1	6S124A73	RESISTOR	10K-5-1/4
R 153	1	6S124A65	RESISTOR	4.7K-5-1/4
R 154	1	18D83452F09	RESISTOR,VARIABLE	1K
R 155	1	6S124A65	RESISTOR	4.7K-5-1/4
R 156	1	6-10621B62	RESISTOR	464-1-1/8
R 157	1	06D82672B62	RESISTOR	2K-1-1/4
R 158	1	06D82672B62	RESISTOR	2K-1-1/4
R 159	1	6-10621B62	RESISTOR	464-1-1/8
R 160	1	6-10621C35	RESISTOR	2610-1-1/8
R 162	1	6-10621A01	RESISTOR	10-1-1/8
R 163	1	6-10621A01	RESISTOR	10-1-1/8
R 164	1	6-10621B62	RESISTOR	464-1-1/8
R 165	1	6-10621C59	RESISTOR	4640-1-1/8
R 166	1	6-10621C63	RESISTOR	5.11K-1-1/8
R 167	1	06D83175C03	RESISTOR	10K-1-1/4
R 168	1	06D83175C03	RESISTOR	10K-1-1/4
R 169	1	6-20621C19	RESISTOR	1780-1-1/8
R 170	1	6-20621C19	RESISTOR	1780-1-1/8
R 171	1	6-10621C35	RESISTOR	2610-1-1/8
R 173	1	6-10621A01	RESISTOR	10-1-1/8
R 174	1	6-10621A01	RESISTOR	10-1-1/8
R 175	1	6-10621B62	RESISTOR	464-1-1/8
R 176	1	6-10621C59	RESISTOR	4640-1-1/8
R 177	1	6-10621C63	RESISTOR	5.11K-1-1/8
R 178	1	06D83175C03	RESISTOR	10K-1-1/4
R 179	1	06D83175C03	RESISTOR	10K-1-1/4
R 180	1	6-20621C19	RESISTOR	1780-1-1/8
R 181	1	6-20621C19	RESISTOR	1780-1-1/8
R 182	1	6-10621D68	RESISTOR	61.9K-1-1/8
R 183	1	6-10621C35	RESISTOR	2610-1-1/8
R 184	1	6-10621D68	RESISTOR	61.9K-1-1/8
R 185	1	6-10621C35	RESISTOR	2610-1-1/8
R 186	1	06D82672B62	RESISTOR	2K-1-1/4
R 187	1	6-10621B62	RESISTOR	464-1-1/8
R 188	1	6S124A65	RESISTOR	4.7K-5-1/4
R 189	1	6S124A56	RESISTOR	2.0K-5-1/4
U 001	1	51-80368A64	INTEGRATED CIRCUIT	LM324N SCREENED
U 002	1	51-80368A40	INTEGRATED CIRCUIT	MC14066BCP SCREENED
U 003	1	51-80345A01	INTEGRATED CIRCUIT	CA3140E SCREENED
U 004	1	51-80368A68	INTEGRATED CIRCUIT	MLM311P SCREENED
U 005	1	51-80345A01	INTEGRATED CIRCUIT	CA3140E SCREENED
U 006	1	51-80368A40	INTEGRATED CIRCUIT	MC14066BCP SCREENED
U 007	1	51-80368A32	INTEGRATED CIRCUIT	MC14011BCP SCREENED
U 008	1	51-80368A40	INTEGRATED CIRCUIT	MC14066BCP SCREENED
U 009	1	51-80345A01	INTEGRATED CIRCUIT	CA3140E SCREENED
U 010	1	51-80368A40	INTEGRATED CIRCUIT	MC14066BCP SCREENED
U 011	1	51-80368A34	INTEGRATED CIRCUIT	MC14027BCP SCREENED
U 012	1	51-80368A64	INTEGRATED CIRCUIT	LM324N SCREENED
U 013	1	51-80345A06	INTEGRATED CIRCUIT	LM319N SCREENED
U 014	1	51-80368A68	INTEGRATED CIRCUIT	LM311 SCREENED
U 024	1	51-80368A64	INTEGRATED CIRCUIT	LM324N SCREENED
U 025	1	51-80345A04	INTEGRATED CIRCUIT	CA3240E SCREENED
U 027	1	51-80345A03	INTEGRATED CIRCUIT	CA3183E SCREENED
U 028	1	51-80345A03	INTEGRATED CIRCUIT	CA3183E SCREENED

Figure 8-3. Vertical/Horizontal Scope Amplifier Module A2 (RTC-4007B) Parts Location Diagram

SECTION 9

SCOPE/DVM CONTROL MODULE (A3)

9-1. General. A primary function of the Scope/DVM Control Module is to route the required measurement and viewing signals to the DVM and scope circuitry. A large portion of the displayed data is determined by the DVM measurements on internal signal points. Thus for a rapid update of several data displays it is necessary to time division multiplex several measurement points to the DVM. The DVM control circuitry and the system processor provide this function.

9-2. The scope control circuitry allows the system to display data information, internal modulation or demodulated signals, and external scope inputs as selected by the user. Provisions are also made for external horizontal inputs and a horizontal sweep that is coherent with the sweep generator for spectrum analyzer and filter alignment displays.

9-3. The control module also contains circuitry for single sideband demodulation and a IF phase locked loop for filtering and waveshaping the IF signal for frequency counting. A block diagram of the Scope/DVM Control module is shown in figure 9-1 with a schematic shown in figure 9-2.

9-4. Scope Vertical Control. The input to the scope vertical amplifier is switched between four different sources; the range switch (VERT FROM RNG SW), the vertical character sweep, the spectrum analyzer (SPECT ANA VERT), or the 455 kHz IF. Range switch inputs are from either the scope vertical input jack on the front panel or the internal modulation signals as selected by the modulation display control on this module. The vertical character sweep is a sawtooth waveform generated by the Vertical Character Sweep Generator and synced by the VERT CHAR SYNC signal from the character generator. The detected and amplified output of the receiver logarithimic IF is the vertical input for the spectrum analyzer. The remaining signal source is the second IF signal from the receiver for IF envelope observation.

9-5. For the spectrum analyzer and the scope sweep displays the Dual Display Control and Character Sweep Counter circuitry allow a single row of characters at the top of the CRT. This function is implemented with the Vertical Sweep Control by alternating the spectrum analyzer or the range switch signal with the vertical character sweep signal.

9-6. The dual display sequence of events starts with the Synthesizer Sweep Generator which is common to both display modes. When the synthesizer sweep is near its peak (scope horizontal sweep is at the edge of the screen) the Dual Display Control activates the CHAR GEN RST line and switches the scope vertical and horizontal inputs to their character generator sweeps. When the first character line has been traced, a transition on the $\overline{\text{LINE 1}}$ input from the character generator resets the character generator sweeps and the character generator, increments the Character Sweep Counter, and thus causes line 1 to be traced again. This process repeats until four traces,as counted by the Character Sweep Counter, have been completed. At that point the counter resets the scope inputs back to the spectrum analyzer or range switch input. During the character display time the synthesizer sweep generator is reset and held until a transition on the SYNTH SWP SYNC line restarts the sweep. The timing of the process allows for the four character traces to be completed before the sweep sync occurs.

9-7. SSB Detection. Single Sideband (SSB) modulation is recovered by multiplying the 455 KHz IF signal with a 455 KHz beat frequency oscillator (BFO) signal. The BFO is controlled directly from the front panel and is adjustable over a 6 KHz frequency range. SSB AUDIO from the multiplier is routed to the receiver for post

detection filtering. A sample of the BFO signal is made available to the frequency counter on the IF/BFO FREQ line for sideband frequency error determination.

9-8. 455 KHz PLL. For monitor frequency error determination a 455 KHz Phase Locked Loop (PLL) is used to filter and to shape the IF signal. The cleaned up signal is switched with the BFO signal to the frequency counter.

9-9. Scope Horizontal Control. Switching for the scope horizontal input is divided between two modules. The time base generator and the external horizontal input are selected on the scope amplifier module. The Horizontal Character Sweep Generator and the Synthesizer Sweep Generator signals are selected on the Control Module to the INT SCOPE HORIZ signal line.

9-10. For the dual display modes (characters and synthesizer sweep) the Horizontal Switch Control switches the horizontal input between the synthesizer sweep and the character sweep. This switching occurs simultaneously with that occurring in the scope vertical control as described in paragraph 9-6. The Horizontal Switch Control also provides the SCOPE MODE EN line to the scope avplifier to enable the scope mode horizontal inputs.

9-11. Synthesizer Sweep Control. The sweep signal generated by the Synthesizer Sweep Generator is controlled in amplitude and in range across the front panel sweep width control. Attenuations of 1.0 or 0.1 are provided by the Sweep Width Select circuitry to the sweep signal at the DISPERSION SWP signal line to the top of the width control. The bottom side of the width control is returned to the Sweep Width Select circuitry via the DISPERSION SWP RTN line. A 10 to 1 resistor change is made in the return line simultaneously with the attenuator change to give sweep ranges of 1-10 MHz and 0.01-1 MHz.

9-12. Scope Z-Axis Control. The SCOPE Z-AXIS signal has three possible sources as selected by the Z-Axis Control circuit. For character displays the Z-Axis signal is the CHAR GEN Z-AXIS from the character generator. The SWP BLANKING signal from the horizontal timebase generator is switched to the scope Z-Axis for the scope modes. For the remaining modes, spectrum analyzer and scope sweep, a logic zero level is gated to the Z-Axis input.

9-13. Modulation Display Control. Internal modulation or demodulated signals are displayed on the scope by switching the desired signal source to the input ranging switch and then switching the ranging switch output to the scope vertical input. One of two modulation sources or a demodulation output can be switched to the INT SCOPE TO RNG SW signal line for display on the CRT. Each of the signals are gain adjusted prior to the selection switch for scope calibration.

9-14. The DEMOD CAL AUDIO signal from the receiver is either AM, FM, or SSB as determined by the operating mode. The peak signal level on this line is calibrated to 10 kHz/volt for FM and 10%/volt for AM. SSB signals are not calibrated.

9-15. For AM the CARRIER + MOD LVL input from the generator output detector provides a direct display of the modulation. This input is a DC level representative of the average output level plus an AC signal representative of the amplitude modulation on the output. For the scope modulation display the DC level is blocked so that only the AC component is observed. This input is uncalibrated for absolute AC levels, but the processor by determining the peak AC and average DC levels can determine the modulation depth.

9-16. For FM the MOD CAL AUDIO input from the audio synthesizer is calibrated to 5 kHz/volt for narrow band and to 20 kHz/volt for wide band. Correspondingly the display calibrating attenuator has two gain ranges to maintain the same display calibration for both narrow and wide band.

9-17. Peak Detector. Each of the modulation and demodulation inputs can be selected to the peak detecting circuitry for the determination of % AM or kHz deviation. The peak detector circuitry provides DC outputs equal to the negative and positive peak values of the input signal relative to the average DC level of the signal. These levels are then digitized by the DVM and input to the processor where the modulation level is determined.

9-18. DVM Control. Any one of ten internal or one external measurement point may be switched to the DVM for level digitization. Switching is controlled by the processor so that measurements are made to provide current display data. In general several measurement points must be input to obtain all the displayed data. Therefore the processor continuously cycles the switch through the required inputs stopping at each one long enough to digitize and input its level.

9-19. The Internal DVM Select switch is followed by a range attenuator. As the processor cycles through the inputs it sets the range attenuator according to the last cycle reading made at that input. Thus each internal input is auto ranged over two decades to give three digit accuracy up to a maximum input of 10 volts. The internal DVM inputs and their function are listed in table 9-1.

Table 9-1. Internal DVM Inputs

+ Peak Voltage	Positive modulation measurements
- Peak Voltage	Negative modulation measurements
Carrier Level	RF output level
RF INPUT PWR	Power level applied to the RF input/output port
EXT FWD PWR	Forward power level on external inline wattmeter element.
EXT RFL PWR	Reflected power level on external inline wattmeter element.
BATT VOLT	voltage level at DC input jack on the rear panel
TEMP SENS VOLT	+5V level signal the processor that the RF load temperature is too high.
SINAD OUT	DC level proportional to the signal power at the output of the SINAD notch filter.
SINAD IN	DC level proportional to the signal power at the input of the SINAD notch filter.

9-20. External DVM inputs to the front panel jack are ranged by the processor over a four decade range before being routed to the DVM switch. At the Internal/External DVM Select switch the external DVM FROM RNG SW signal or the internal signal from the x0.1 Attenuator is selected to the DVM to A/D signal line for digitization.

9-21. SINAD Detection. The SINAD of a signal on the DVM FROM RNG SW line is determined by taking the ratio of the input to the output signal power on the 1 kHz Notch Filter. Signal power is determined by Rectifier and Filter circuits whose outputs are DC levels proportional to the input signal levels. The DC levels, SINAD IN and SINAD OUT are digitized and input to the processor where the SINAD is calculated.

9-22. Module Control. Processor control of the Scope/DVM Control module is via the AF ADD BUS 0-3, the AF DATA BUS 0-3, and the AF BUS EN 1 signal lines. The four address bits are decoded by the Address Decode to determine which Control Latch the fours bits of data will be latched. The latching process is synchronized by the enable line. Control latches in addition to those necessary for controlling the module provide control for the Scope Amplifier module and part of the RF Input module.

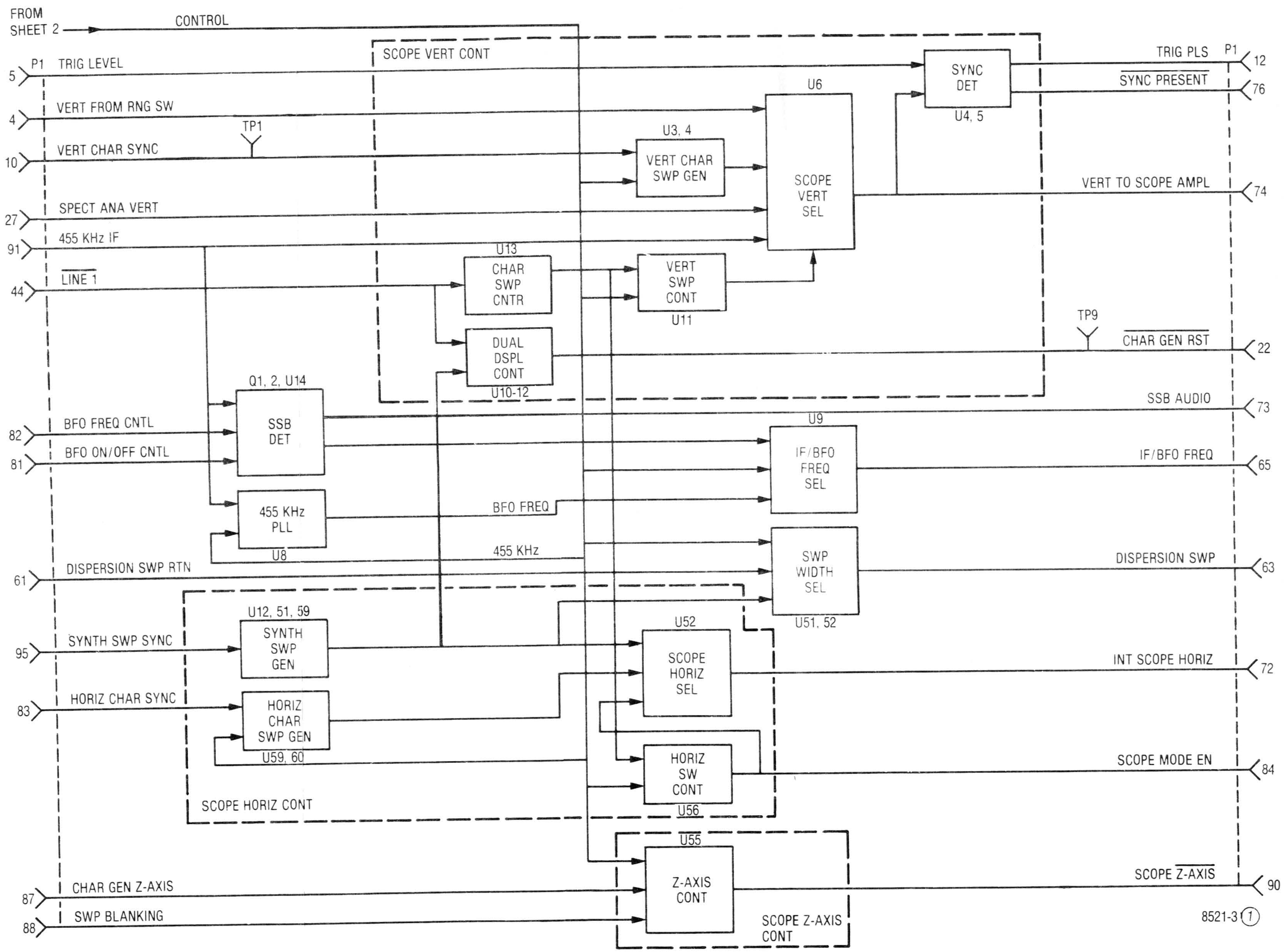

Figure 9-1. Scope/DVM Control Module A3
Block Diagram (Sheet 1 of 2)

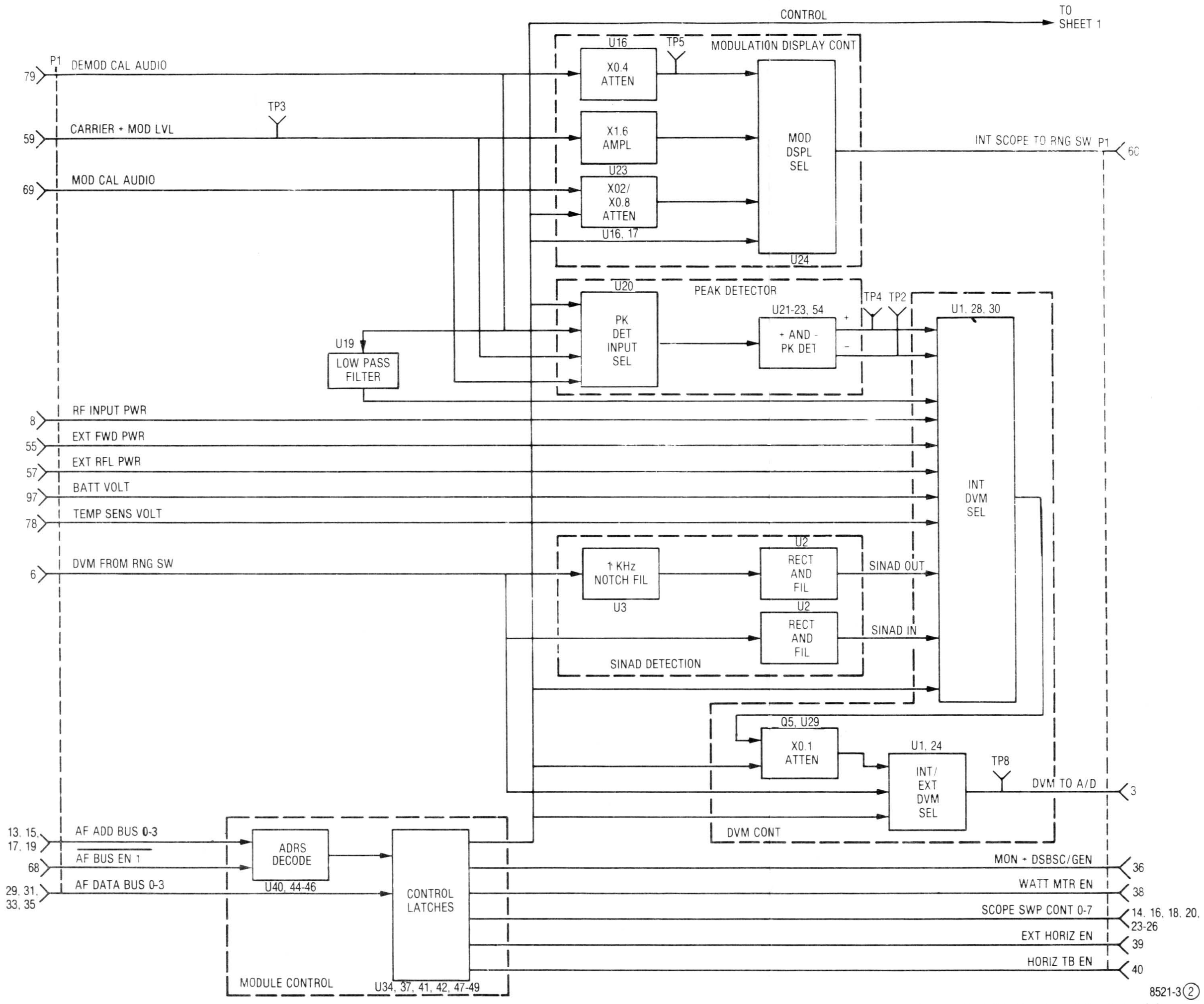

Figure 9-1. Scope/DVM Control Module A3 Block Diagram (Sheet 2 of 2)

NOTES:

1. PARTIAL REFERENCE DESIGNATIONS ARE SHOWN. FOR COMPLETE DESIGNATION PREFIX WITH 1A3.
2. FOR REFERENCE DRAWINGS REFER TO: ASSY. NO. 01-P00409N002
3. UNLESS OTHERWISE SPECIFIED:
   ALL RESISTORS ARE IN OHMS ±5 PCT, 1/4 WATT.
   ALL CAPACITORS ARE IN UF.
   ALL INDUCTORS ARE IN UH.
   ALL VOLTAGES AR DC.
4. TRANSISTOR IS P/N 48R00869570.
5. VALUE MAY BE SELECTED IN TEST. VALUE SHOWN IS NOMINAL.

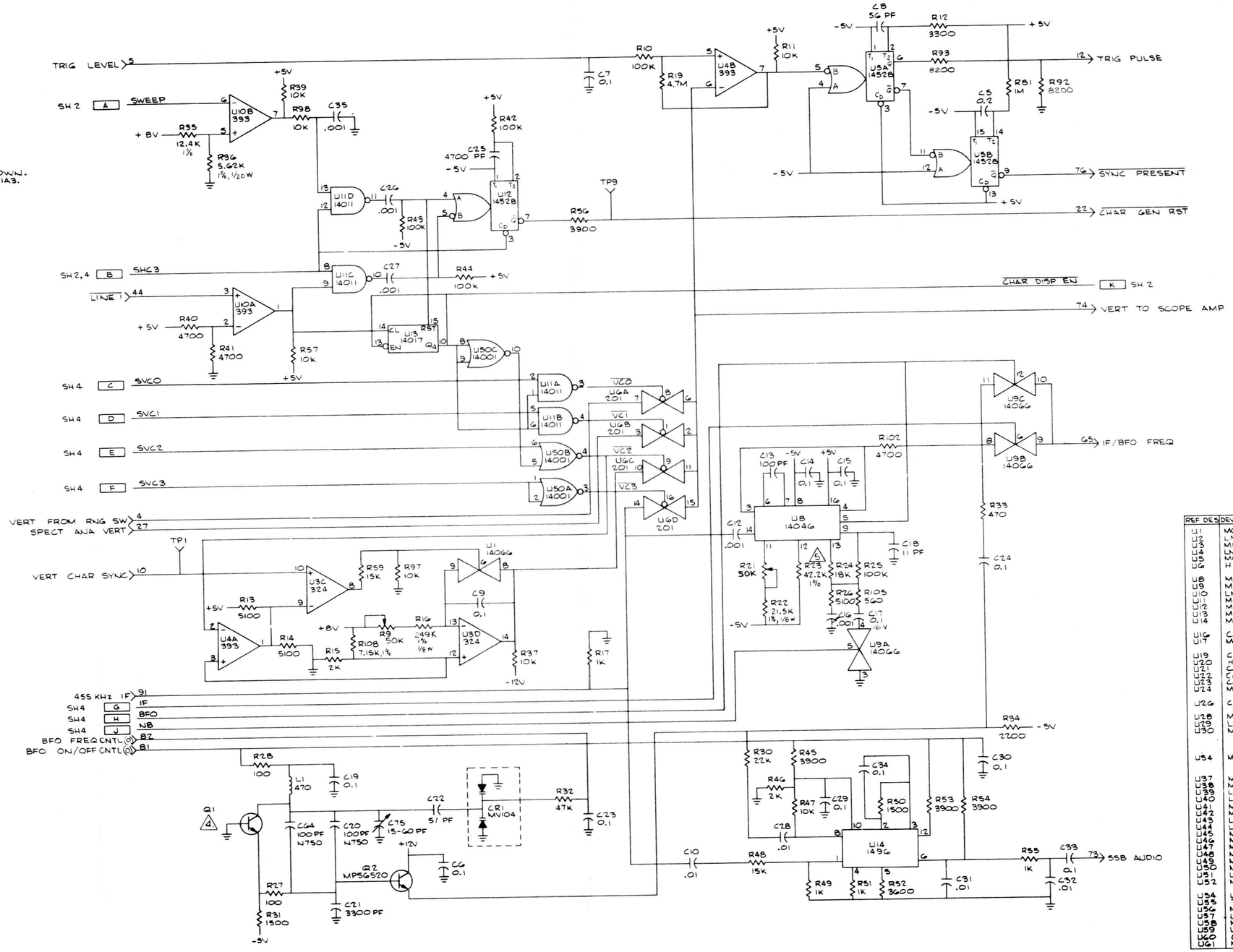

REF DES	DEVICE TYPE	GND	+V	-V	NO CONN
U1	MC14066		+12V/14	-5V/7	
U2	LM324		+12V/4	-12V/11	
U3	MLM324		+12V/4	-12V/11	
U4	LM393		+5V/8	-5V/4	
U5	MC14528		+5V/16	-5V/8	10
U6	HI-201-5	5	+12V/13	-12V/4	12
U8	MC14046		+5V/16	-5V/8	1,2,10,15
U9	MC14066	3	+5V/14	-5V/7	1,2,13
U10	LM393		+5V/8	-5V/4	
U11	MC14011		+5V/14	-5V/7	
U12	MC14528		+5V/16	5V/8,1/16	6,9
U13	MC14017		+5V/16	-5V/8	1 THRU 7,9,11,12
U14	MC1496			-5V/14	7,9,11,13,
U16	CA3240		+12V/8	-12V/4	
U17	MC14066	1,3,11	+12V/14	-5V/7	
U19	CA3140		+12V/7	-12V/4	1,5,8
U20	HI-201-5	5	+12V/13	-12V/4	12
U21	CA3140		+12V/7	-12V/4	8
U22	CA3240		+12V/8	-12V/4	
U23	CA3240	3	+12V/8	-12V/4	
U24	MC14066		+5V/14	-5V/7	
U26	CA3140		+12V/7	-12V/4	8
U28	MC14066		+12V/14	-5V/7	
U29	LM308		+5V/7	-5V/4	5
U30	MC14066		+12V/14	-5V/7	
U34	MC14514		+12V/24	-5V/12,23	14,15,16,19,20
U37	MC14042		+5V/16,6	-5V/8	9,10,11
U38	MC14555		+5V/16	-5V/8	1,15
U39	LM324	2,4,9,13	+12V/4	-5V/11	
U40	LM324		+12V/4	-5V/11	1,2,3
U41	MC14042		+5V/16,6	-5V/8	9,10
U42	MC14042		+5V/16,6	-5V/8	3,9,12,15
U43	LM324		+5V/4	-5V/11	
U44	LM324		+5V/4	-5V/11	
U45	MC14011		+5V/14	-5V/7	4-6,11-13
U46	MC14028		+5V/16	-5V/8	4,5,9
U47	MC14042		+5V/16,6	-5V/8	3,9,12,15
U48	MC14042		+5V/16,6	-5V/8	3,9,12,15
U49	MC14042		+5V/16,6	-5V/8	3,9,12,15
U50	MC14001		+5V/14	-5V/7	11-13
U51	LM324		+12V/4	-12V/11	5-7,12-14
U52	MC14066	9,4	+12V/14	-5V/7	
U54	LM393		+12V/8	-12V/4	8
U55	74LS02	7	+5V/16	-5V/8	
U56	MC14001		+5V/14	-5V/7	
U57	LM324	9	+12V/4	-12V/11	
U58	MC1403	3	+12V/8		
U59	LM393		+5V/8	-5V/4	
U60	CA3140		+12V/7	-12V/4	1,8,5
U61	MC14049		+5V/1	-5V/8	6,7,11-13,16

Figure 9-2. Scope/DVM Control Module A3
Schematic Diagram (Sheet 1 of 4)

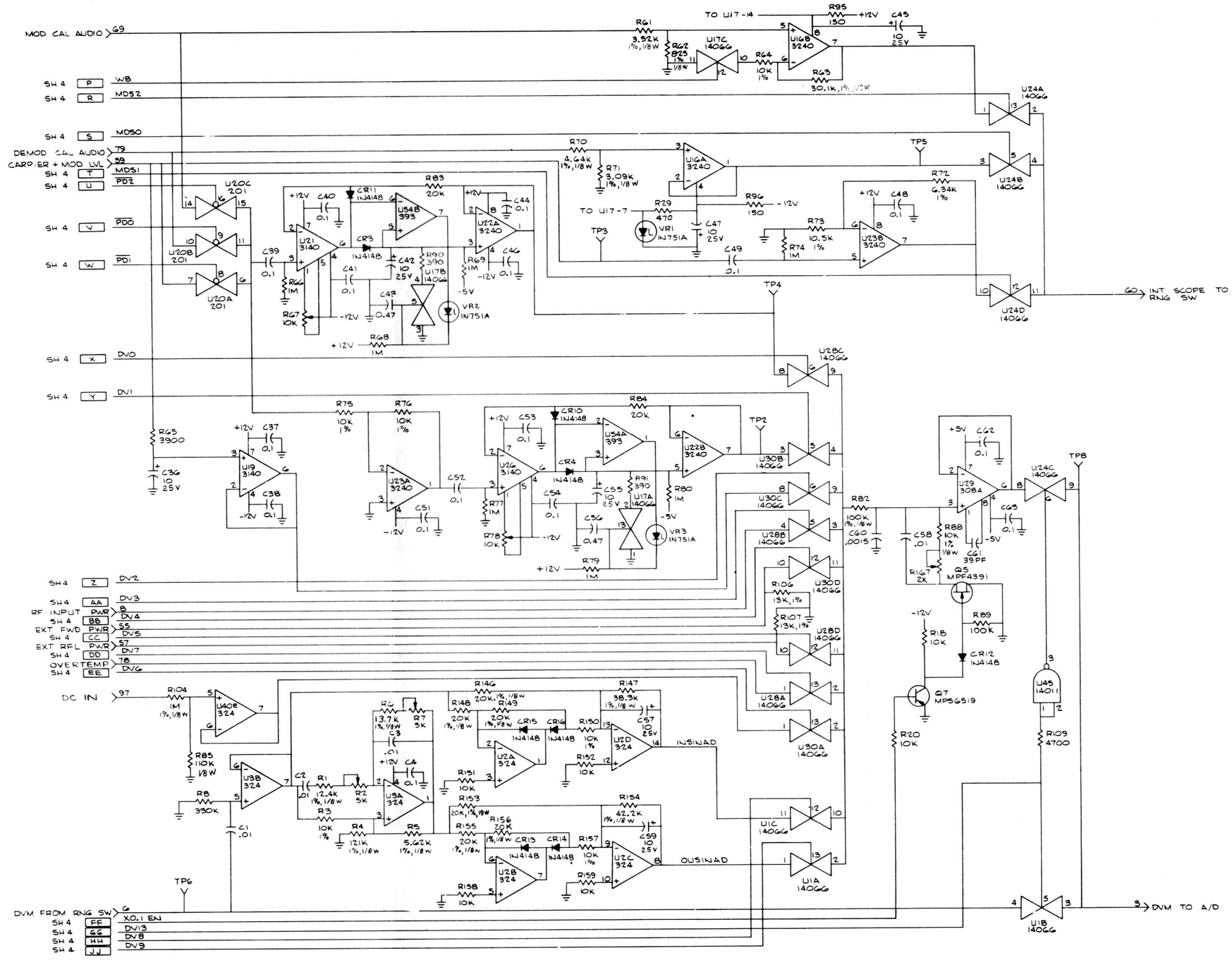

Figure 9-2. Scope/DVM Control Module A3
Schematic Diagram (Sheet 3 of 4)

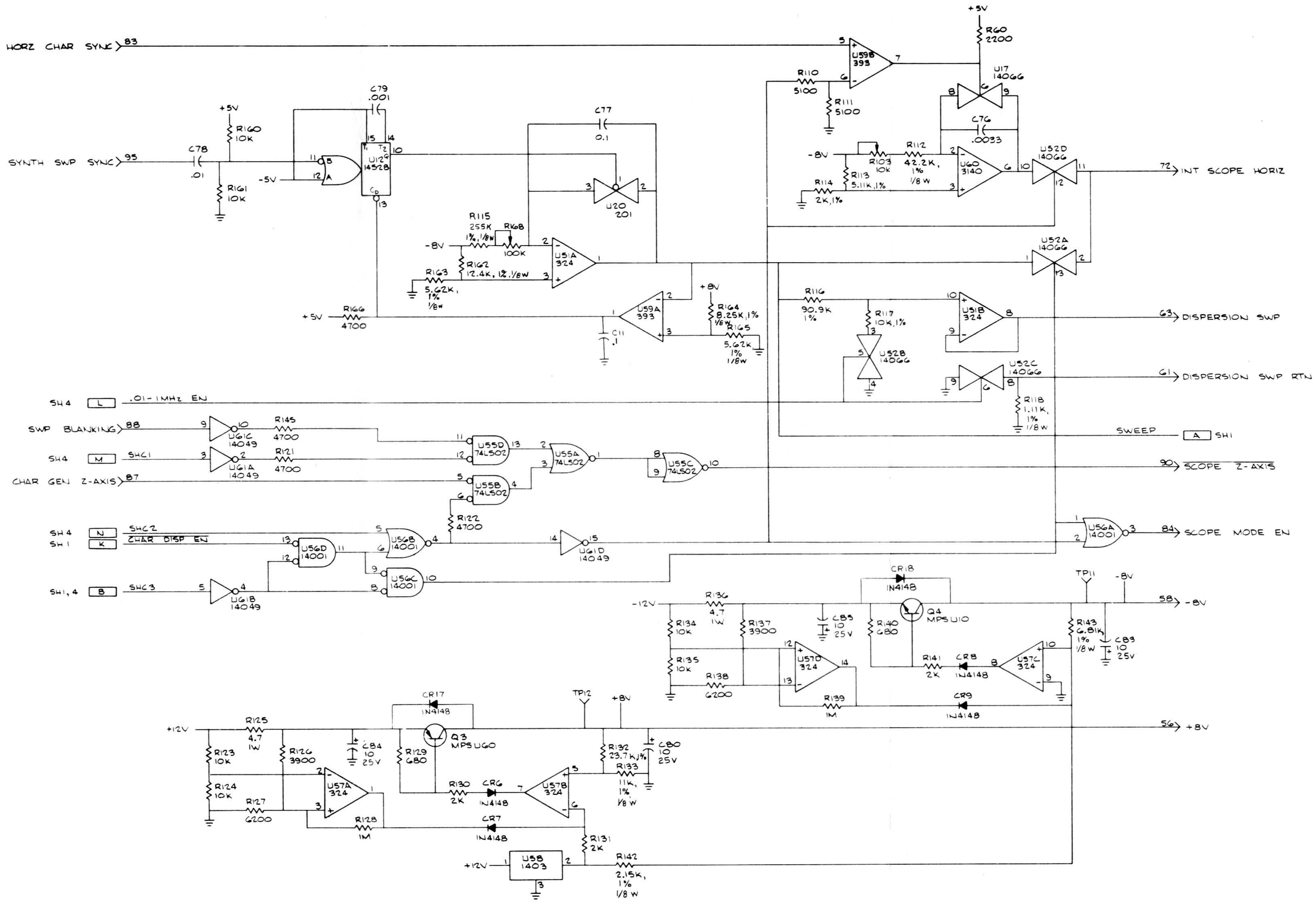

Figure 9-2. Scope/DVM Control Module A3 Schematic Diagram (Sheet 2 of 4)

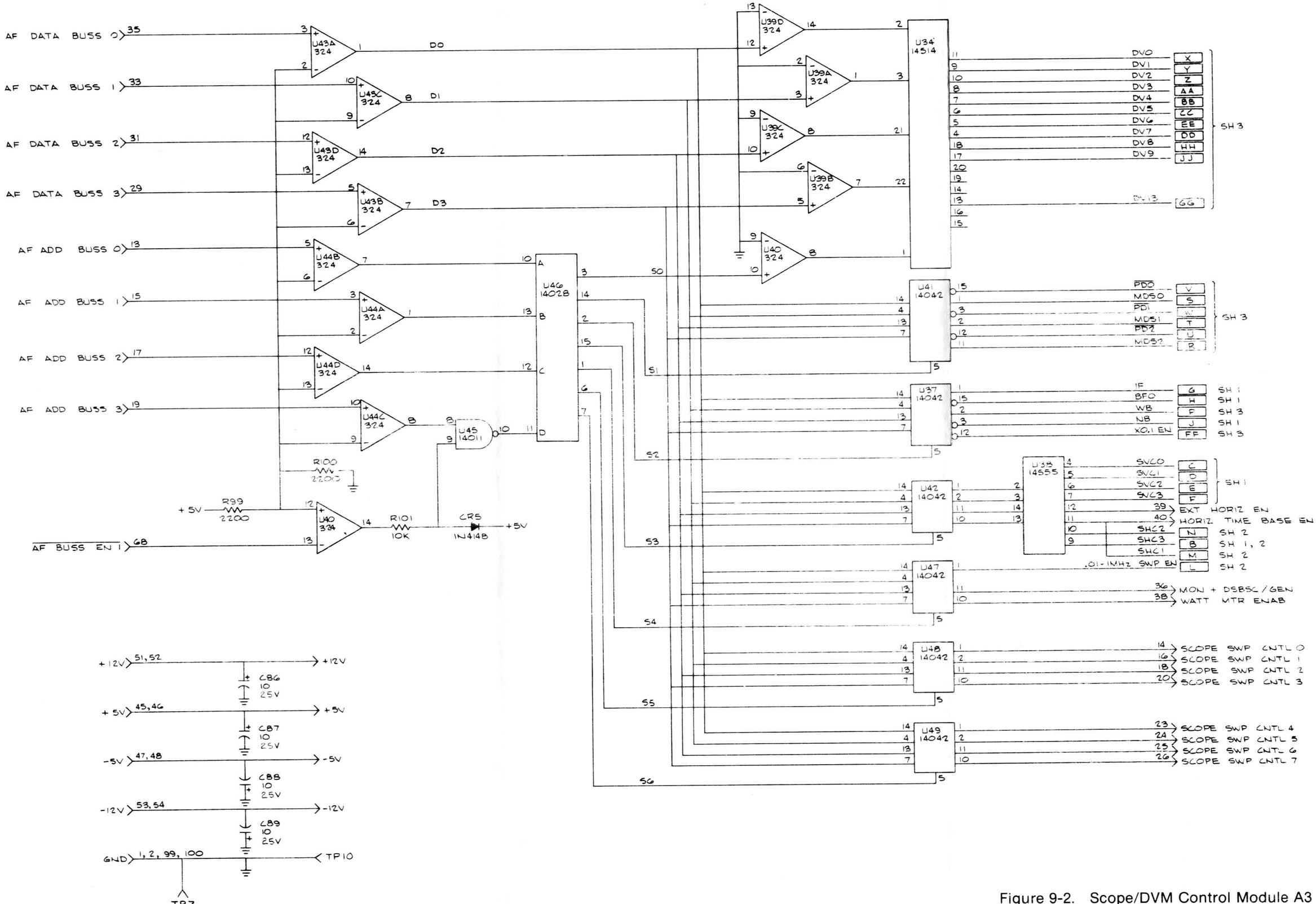

Figure 9-2. Scope/DVM Control Module A3 Schematic Diagram (Sheet 4 of 4)

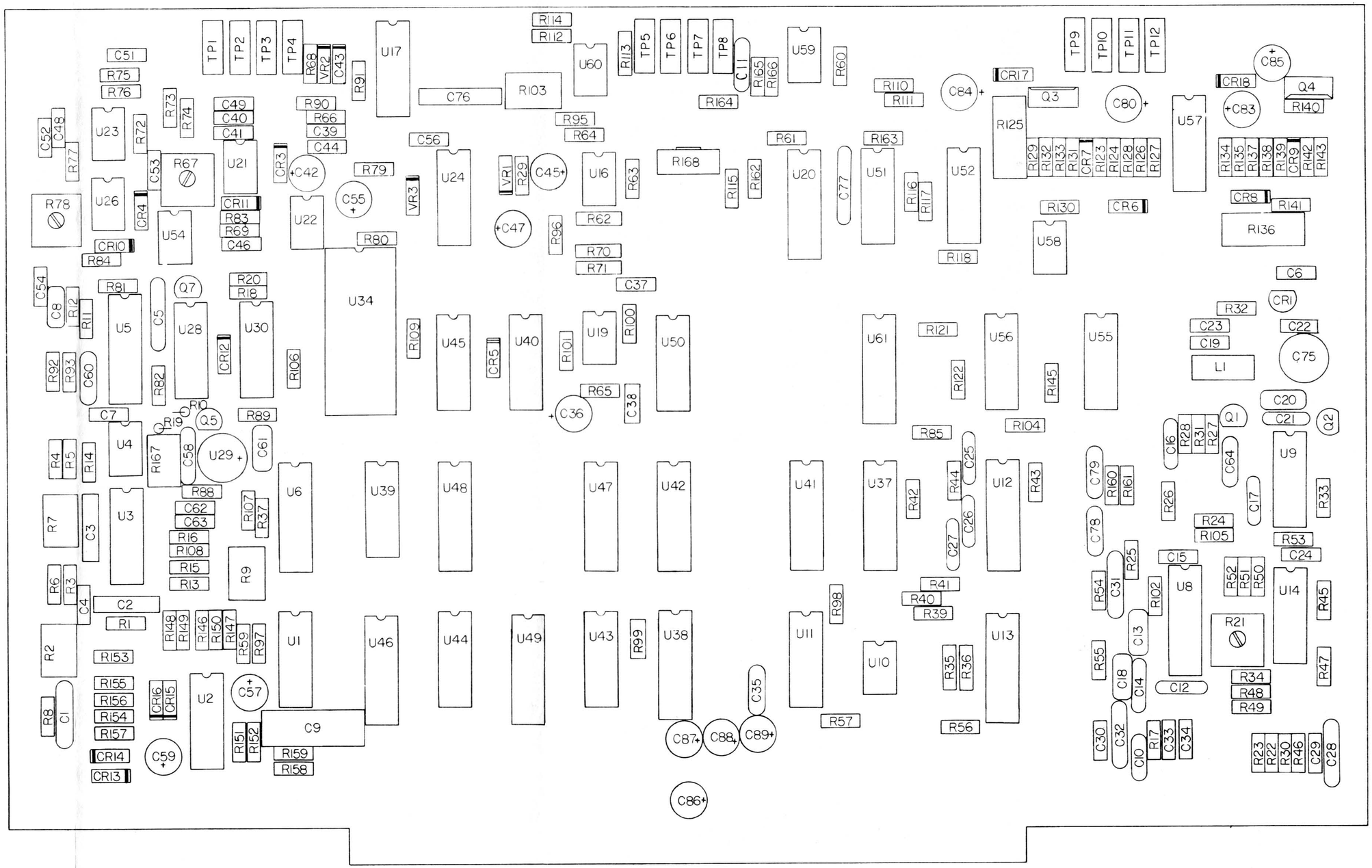

Figure 9-3. Scope/DVM Control Module A3 (RTC-4008B) Parts Location Diagram (Sheet 1 of 3)

Find No.	Qty. Req.	Part No.	Nomenclature	Part Value
		RTC-4008B	SCOPE/DVM CONTROL	
001	1	84-80335A20	PWB, SCOPE/DVM CONT	
002	AR	SN63WRP3	SOLDER	
003	AR	11-14167A01	INK	BLACK
004	1	7-80335A63	BRACKET,PWB MTG	
005	4	MS20470AD4-5	RIVET	1/8X.312
006	2	5C84500B03	EYELET	
007	2	42C84284B01	RETAINER	
008	2	MS35206-214	SCREW,PH	4-40X.312
C 001	1	21D82428B19	CAPACITOR	0.01UF-20-500
C 002	1	08D80332A33	CAPACITOR	0.01UF-10-400
C 003	REF	08D80332A33	CAPACITOR	0.01UF-10-400
C 004	1	21-80369A82	CAPACITOR	.1UF-20-100
C 005	1	21C82372C05	CAPACITOR	.2UF80-20-25
C 006	1	21-80369A82	CAPACITOR	.1UF-20-100
C 007	1	21-80369A82	CAPACITOR	.1UF-20-100
C 008	1	21D84494B45	CAPACITOR	56PF-5-500
C 009	1	08D82905G27	CAPACITOR	0.1UF-10-50
C 010	1	21D82428B59	CAPACITOR	.01UF-2080-200
C 011	1	21-80348A89	CAPACITOR	.1UF-20-16
C 012	1	21D82187B14	CAPACITOR	1000PF-10-100
C 013	1	21D84494B04	CAPACITOR	100PF-5-500
C 014	1	21-80369A82	CAPACITOR	.1UF-20-100
C 015	1	21-80369A82	CAPACITOR	.1UF-20-100
C 016	1	21D82187B14	CAPACITOR	1000PF-10-100
C 017	1	21-80348A89	CAPACITOR	.1UF-16
C 018	1	21D84494B37	CAPACITOR	11PF-5-500
C 019	1	21-80369A82	CAPACITOR	.1UF-20-100
C 020	1	21D82610C58	CAPACITOR	100PF-N750
C 021	1	21D82428B10	CAPACITOR	3300PF-10-100
C 022	1	21D84494B01	CAPACITOR	51PF-5-500
C 023	1	21-80369A82	CAPACITOR	.1UF-20-100
C 024	1	21-80369A82	CAPACITOR	.1UF-20-100
C 025	1	21D82428B09	CAPACITOR	4700PF-10-100
C 026	1	21D82187B14	CAPACITOR	1000PF-10-100
C 027	1	21D82187B14	CAPACITOR	1000PF-10-100
C 028	1	21D82428B19	CAPACITOR	.01UF-20-500
C 029	1	21-80369A82	CAPACITOR	.1UF-20-100
C 030	1	21-80369A82	CAPACITOR	.1UF-20-100
C 031	1	21D82428B19	CAPACITOR	0.01UF-20-500
C 032	1	21D82428B19	CAPACITOR	0.01UF-20-500
C 033	1	21-80369A82	CAPACITOR	.1UF-20-100
C 034	1	21-80369A82	CAPACITOR	.1UF-20-100
C 035	1	21D82187B14	CAPACITOR	1000PF-10-100
C 036	1	23D84665F01	CAPACITOR	10UF-25V
C 037	1	21-80369A82	CAPACITOR	.1UF-20-100
C 038	1	21-80369A82	CAPACITOR	.1UF-20-100
C 039	1	21-80369A82	CAPACITOR	.1UF-20-100
C 040	1	21-80369A82	CAPACITOR	.1UF-20-100
C 041	1	21-80369A82	CAPACITOR	.1UF-20-100
C 042	1	23D84665F01	CAPACITOR	10UF-25V
C 043	1	CK06BX474K	CAPACITOR	.47UF-10-50
C 044	1	21-80369A82	CAPACITOR	.1UF-20-100
C 045	1	23D84665F01	CAPACITOR	10UF-25V
C 046	1	21-80369A82	CAPACITOR	.1UF-20-100
C 047	1	23D84665F01	CAPACITOR	10UF-25V
C 048	1	21-80369A82	CAPACITOR	.1UF-20-100
C 049	1	21-80369A82	CAPACITOR	.1UF-20-100
C 051	1	21-80369A82	CAPACITOR	.1UF-20-100
C 052	1	21-80369A82	CAPACITOR	.1UF-20-100
C 053	1	21-80369A82	CAPACITOR	.1UF-20-100
C 054	1	21-80369A82	CAPACITOR	.1UF-20-100
C 055	1	23D84665F01	CAPACITOR	10UF-25V
C 056	1	CK06BX474K	CAPACITOR	.47UF-10-50
C 057	1	23D84665F01	CAPACITOR	10UF-25V
C 058	1	21D82428B59	CAPACITOR	.01UF-2080-200
C 059	1	23D84665F01	CAPACITOR	10UF-25V
C 060	1	21D82187B11	CAPACITOR	1500PF-10-100
C 061	1	21D84494B24	CAPACITOR	39PF-5-500
C 062	1	21-80369A82	CAPACITOR	.1UF-20-100
C 063	1	21-80369A82	CAPACITOR	.1UF-20-100
C 064	1	21D82610C58	CAPACITOR	100PF-N750
C 075	1	19-80370A36	CAPACITOR	15 TO 60PF-200
C 076	1	08D82905G25	CAPACITOR	.0033-10-100
C 077	1	21-80370A05	CAPACITOR	.1UF-10-100
C 078	1	21D82428B59	CAPACITOR	.01UF-2080-200
C 079	1	21D82187B14	CAPACITOR	1000PF-10-100
C 080	1	23D84665F01	CAPACITOR	10UF-25V
C 083	1	23D84665F01	CAPACITOR	10UF-25V
C 084	1	23D84665F01	CAPACITOR	10UF-25V
C 085	1	23D84665F01	CAPACITOR	10UF-25V
C 086	1	23D84665F01	CAPACITOR	10UF-25V
C 087	1	23D84665F01	CAPACITOR	10UF-25V
C 088	1	23D84665F01	CAPACITOR	10UF-25V
C 089	1	23D84665F01	CAPACITOR	10UF-25V
CR001	1	48-80345A73	DIODE	
CR003	1	48-84463K02	DIODE	
CR004	1	48-84463K02	DIODE	
CR005	1	48-84463K02	DIODE	
CR006	1	48-84463K02	DIODE	
CR007	1	48-84463K02	DIODE	
CR008	1	48-84463K02	DIODE	
CR009	1	48-84463K02	DIODE	
CR010	1	48-84463K02	DIODE	
CR011	1	48-84463K02	DIODE	
CR012	1	48-84463K02	DIODE	
CR013	1	48-84463K02	DIODE	
CR014	1	48-84463K02	DIODE	
CR015	1	48-84463K02	DIODE	
CR016	1	48-84463K02	DIODE	
CR017	1	48-84463K02	DIODE	
CR018	1	48-84463K02	DIODE	
L 001	1	24-80348A83	COIL	470UH
Q 001	1	48R00869570	TRANSISTOR	
Q 002	1	48-80368A91	TRANSISTOR	MPS6520 SCREENED
Q 003	1	48-80341A48	TRANSISTOR	MPS-U60 SCREENED
Q 004	1	48-80341A47	TRANSISTOR	MPS-U10 SCREENED
Q 005	1	48-80345A48	TRANSISTOR	
Q 007	1	48-80368A92	TRANSISTOR	MPS6519 SCREENED
R 001	1	6-10621D01	RESISTOR	12.4K-1-1/8
R 002	1	18D83452F11	RESISTOR,VARIABLE	5K
R 003	1	06D83175C03	RESISTOR	10K-1-1/4
R 004	1	6-10621D96	RESISTOR	121K-1-1/8
R 005	1	6-10621C67	RESISTOR	5620-1-1/8
R 006	1	6-10621D05	RESISTOR	13.7K-1-1/8
R 007	1	18D83452F11	RESISTOR,VARIABLE	5K
R 008	1	6S124B10	RESISTOR	330K-5-1/4
R 009	1	18D83452F17	RESISTOR,VARIABLE	50K
R 010	1	6S124A97	RESISTOR	100K-5-1/4
R 011	1	6S124A73	RESISTOR	10K-5-1/4
R 012	1	6S124A61	RESISTOR	3.3K-5-1/4
R 013	1	6S124A66	RESISTOR	5.1K-5-1/4
R 014	1	6S124A66	RESISTOR	5.1K-5-1/4
R 015	1	06D84444A16	RESISTOR	2000-1-1/4
R 016	1	6-10621E27	RESISTOR	249K-1-1/8
R 017	1	6S124A49	RESISTOR	1K-5-1/4
R 018	1	6S124A73	RESISTOR	10K-5-1/4
R 019	1	6S124B38	RESISTOR	4.7M-5-1/4
R 020	1	6S124A73	RESISTOR	10K-5-1/4
R 021	1	18D83452F18	RESISTOR,VARIABLE	50K
R 022	1	6-10621D24	RESISTOR	21.5K-1-1/8
R 023	1	06D84444A27	RESISTOR	42.2K-1-1/4 NOMINAL
R 023	S01	6S124A83	RESISTOR	27K-5-1/4
R 023	S01	6S124A85	RESISTOR	33K-5-1/4
R 023	S01	6S124A87	RESISTOR	39K-5-1/4
R 023	S01	6S124A89	RESISTOR	47K-5-1/4
R 023	S01	6S124A91	RESISTOR	56K-5-1/4
R 023	S01	6S124A93	RESISTOR	68K-5-1/4
R 024	1	6S124A79	RESISTOR	18K-5-1/4
R 025	1	6S124A97	RESISTOR	100K-5-1/4
R 026	1	6S124A66	RESISTOR	5.1K-5-1/4
R 027	1	6S124A25	RESISTOR	100-5-1/4
R 028	1	6S124A25	RESISTOR	100-5-1/4
R 029	1	6S124A41	RESISTOR	470-5-1/4
R 030	1	6S124A81	RESISTOR	22K-5-1/4
R 031	1	6S124A53	RESISTOR	1.5K-5-1/4
R 032	1	6S124A89	RESISTOR	47K-5-1/4
R 033	1	6S124A41	RESISTOR	470-5-1/4
R 034	1	6S124A57	RESISTOR	2.2K-5-1/4
R 035	1	06D83175C10	RESISTOR	12.4K-1-1/4
R 036	1	06D84444A45	RESISTOR	5.62K-1-1/20
R 037	1	6S124A73	RESISTOR	10K-5-1/4
R 039	1	6S124A73	RESISTOR	10K-5-1/4
R 040	1	6S124A65	RESISTOR	4.7K-5-1/4
R 041	1	6S124A65	RESISTOR	4.7K-5-1/4
R 042	1	6S124A97	RESISTOR	100K-5-1/4
R 043	1	6S124A97	RESISTOR	100K-5-1/4
R 044	1	6S124A97	RESISTOR	100K-5-1/4
R 045	1	6S124A63	RESISTOR	3.9K-5-1/4
R 046	1	6S124A56	RESISTOR	2.0K-5-1/4
R 047	1	6S124A73	RESISTOR	10K-5-1/4
R 048	1	6S124A77	RESISTOR	15K-5-1/4
R 049	1	6S124A49	RESISTOR	1K-5-1/4
R 050	1	6S124A53	RESISTOR	1.5K-5-1/4
R 051	1	6S124A49	RESISTOR	1K-5-1/4
R 052	1	6S124A62	RESISTOR	3.6K-5-1/4
R 053	1	6S124A63	RESISTOR	3.9K-5-1/4
R 054	1	6S124A63	RESISTOR	3.9K-5-1/4
R 055	1	6S124A49	RESISTOR	1K-5-1/4
R 056	1	6S124A63	RESISTOR	3.9K-5-1/4
R 057	1	6S124A73	RESISTOR	10K-5-1/4
R 059	1	6S124A77	RESISTOR	15K-5-1/4
R 060	1	6S124A57	RESISTOR	2.2K-5-1/4
R 061	1	6-10621C45	RESISTOR	3320-1-1/8
R 062	1	6-10621B86	RESISTOR	825-1-1/8
R 063	1	6-10621D38	RESISTOR	30.1K-1-1/8
R 064	1	06D83175C03	RESISTOR	10K-1-1/4
R 065	1	6S124A63	RESISTOR	3.9K-5-1/4
R 066	1	6S124B22	RESISTOR	1M-5-1/4
R 067	1	18D83452F14	RESISTOR,VARIABLE	10K
R 068	1	6S124B22	RESISTOR	1M-5-1/4
R 069	1	6S124B22	RESISTOR	1M-5-1/4
R 070	1	6-10621C59	RESISTOR	4640-1-1/8
R 071	1	6-10621C42	RESISTOR	3090-1-1/8
R 072	1	06D84444A40	RESISTOR	6.34K-1-1/4
R 073	1	06D83175C04	RESISTOR	10.5K-1-1/4
R 074	1	6S124B22	RESISTOR	1M-5-1/4
R 075	1	06D83175C03	RESISTOR	10K-1-1/4
R 076	1	06D83175C03	RESISTOR	10K-1-1/4
R 077	1	6S124B22	RESISTOR	1M-5-1/4
R 078	1	18D83452F14	RESISTOR,VARIABLE	10K

Figure 9-3. Scope/DVM Control Module A3 (RTC-4008B) Parts Location Diagram (Sheet 2 of 3)

Find No.	Qty. Req.	Part No.	Nomenclature	Part Value
R 079	1	6S124B22	RESISTOR	1M-5-1/4
R 080	1	6S124B22	RESISTOR	1M-5-1/4
R 081	1	6S124B22	RESISTOR	1M-5-1/4
R 082	1	6-10621D88	RESISTOR	100K-1-1/8
R 083	1	6S124A80	RESISTOR	20K-5-1/4
R 084	1	6S124A80	RESISTOR	20K-5-1/4
R 085	1	6-10621D92	RESISTOR	110K-5-1/8
R 088	1	6-10621C91	RESISTOR	10K-1-1/8
R 089	1	6S124A97	RESISTOR	100K-5-1/4
R 090	1	6S124A39	RESISTOR	390-5-1/4
R 091	1	6S124A39	RESISTOR	390-5-1/4
R 092	1	6S124A71	RESISTOR	8200-5-1/4
R 093	1	6S124A71	RESISTOR	8200-5-1/4
R 095	1	6S124A29	RESISTOR	150-5-1/4
R 096	1	6S124A29	RESISTOR	150-5-1/4
R 097	1	6S124A73	RESISTOR	10K-5-1/4
R 098	1	6S124A73	RESISTOR	10K-5-1/4
R 099	1	6S124A57	RESISTOR	2.2K-5-1/4
R 100	1	6S124A57	RESISTOR	2.2K-5-1/4
R 101	1	6S124A73	RESISTOR	10K-5-1/4
R 102	1	6S124A65	RESISTOR	4.7K-5-1/4
R 103	1	18D83452F13	RESISTOR,VARIABLE	10K
R 104	1	6-10621E85	RESISTOR	1M-1-1/8
R 105	1	6S124A43	RESISTOR	560-5-1/4
R 106	1	06D83175C12	RESISTOR	13.0K-1-1/4
R 107	1	06D83175C12	RESISTOR	13.0K-1-1/4
R 108	1	06D84444A42	RESISTOR	7.15K-1-1/4
R 109	1	6S124A65	RESISTOR	4.7K-5-1/4
R 110	1	6S124A66	RESISTOR	5.1K-5-1/4
R 111	1	6S124A66	RESISTOR	5.1K-5-1/4
R 112	1	6-10621D52	RESISTOR	42.2K-1-1/8
R 113	1	06D83175C83	RESISTOR	5.11K-1-1/4
R 114	1	06D84444A16	RESISTOR	2000-1-1/4
R 115	1	6-10621E28	RESISTOR	255K-1-1/8
R 116	1	06D83175C76	RESISTOR	90.9K-1-1/4
R 117	1	06D83175C03	RESISTOR	10K-1-1/4
R 118	1	6-10621B98	RESISTOR	1100-1-1/8
R 121	1	6S124A65	RESISTOR	4.7K-5-1/4
R 122	1	6S124A65	RESISTOR	4.7K-5-1/4
R 123	1	6S124A73	RESISTOR	10K-5-1/4
R 124	1	6S124A73	RESISTOR	10K-5-1/4
R 125	1	6S126B61	RESISTOR	4.7-5-1
R 126	1	6S124A63	RESISTOR	3.9K-5-1/4
R 127	1	6S124A68	RESISTOR	6.2K-5-1/4
R 128	1	6S124B22	RESISTOR	1M-5-1/4
R 129	1	6S124A45	RESISTOR	680-5-1/4
R 130	1	6S124A56	RESISTOR	2.0K-5-1/4
R 131	1	6S124A56	RESISTOR	2.0K-5-1/4
R 132	1	6-10621D28	RESISTOR	23.7K-1-1/4
R 133	1	6-10621C95	RESISTOR	11K-1-1/8
R 134	1	6S124A73	RESISTOR	10K-5-1/4
R 135	1	6S124A73	RESISTOR	10K-5-1/4
R 136	1	6S126B61	RESISTOR	4.7-5-1
R 137	1	6S124A63	RESISTOR	3.9K-5-1/4
R 138	1	6S124A68	RESISTOR	6.2K-5-1/4
R 139	1	6S124B22	RESISTOR	1M-5-1/4
R 140	1	6S124A45	RESISTOR	680-5-1/4
R 141	1	6S124A56	RESISTOR	2.0K-5-1/4
R 142	1	6-10621C27	RESISTOR	2150-1-1/8
R 143	1	6-82526F55	RESISTOR	6.81K-1-1/8
R 145	1	6S124A65	RESISTOR	4.7K-5-1/4
R 146	1	6-10621D21	RESISTOR	20K-1-1/8
R 147	1	6-10621D48	RESISTOR	38.3K-1-1/8
R 148	1	6-10621D21	RESISTOR	20K-1-1/8
R 149	1	6-10621D21	RESISTOR	20K-1-1/8
R 150	1	06D83175C03	RESISTOR	10K-1-1/4
R 151	1	6S124A73	RESISTOR	10K-5-1/4
R 152	1	6S124A73	RESISTOR	10K-5-1/4
R 153	1	6-10621D21	RESISTOR	20K-1-1/8
R 154	1	6-10621D52	RESISTOR	42.2K-1-1/8
R 155	1	6-10621D21	RESISTOR	20K-1-1/8
R 156	1	6-10621D21	RESISTOR	20K-1-1/8
R 157	1	06D83175C03	RESISTOR	10K-1-1/4
R 158	1	6S124A73	RESISTOR	10K-5-1/4
R 159	1	6S124A73	RESISTOR	10K-5-1/4
R 160	1	6S124A73	RESISTOR	10K-5-1/4
R 161	1	6S124A73	RESISTOR	10K-5-1/4
R 162	1	6-10621D01	RESISTOR	12.4K-1-1/8
R 163	1	6-10621C67	RESISTOR	5620-1-1/8
R 164	1	6-10621C83	RESISTOR	8250-1-1/8
R 165	1	6-10621C67	RESISTOR	5620-1-1/8
R 166	1	6S124A65	RESISTOR	4.7K-5-1/4
R 167	1	18D83452F01	RESISTOR,VARIABLE	2K
R 168	1	18D83452F19	RESISTOR,VARIABLE	100K
TP001	1	09-80331A88	JACK,TIP	WHITE
TP002	1	09-80331A88	JACK,TIP	WHITE
TP003	1	09-80331A88	JACK,TIP	WHITE
TP004	1	09-80331A88	JACK,TIP	WHITE
TP005	1	09-80331A88	JACK,TIP	WHITE
TP006	1	09-80331A88	JACK,TIP	WHITE
TP007	1	09-80331A88	JACK,TIP	WHITE
TP008	1	09-80331A88	JACK,TIP	WHITE
TP009	1	09-80331A88	JACK,TIP	WHITE
TP010	1	09-80331A88	JACK,TIP	WHITE
TP011	1	09-80331A88	JACK,TIP	WHITE
TP012	1	09-80331A88	JACK,TIP	WHITE
U 001	1	51-80368A40	INTEGRATED CIRCUIT	MC14066BCP SCREENED
U 002	1	51-80368A64	INTEGRATED CIRCUIT	LM324N SCREENED
U 003	1	51-80368A64	INTEGRATED CIRCUIT	LM324N SCREENED
U 004	1	51-80345A10	INTEGRATED CIRCUIT	LM393N SCREENED
U 005	1	51-80368A57	INTEGRATED CIRCUIT	MC14528B SCREENED
U 006	1	51-80345A05	INTEGRATED CIRCUIT	HI-201-5 SCREENED
U 008	1	51-80345A19	INTEGRATED CIRCUIT	MC14046BCP SCREENED
U 009	1	51-80368A40	INTEGRATED CIRCUIT	MC14066BCP SCREENED
U 010	1	51-80345A10	INTEGRATED CIRCUIT	LM393N SCREENED
U 011	1	51-80368A32	INTEGRATED CIRCUIT	MC14011BCP SCREENED
U 012	1	51-80368A57	INTEGRATED CIRCUIT	MC14528B SCREENED
U 013	1	51-80368A33	INTEGRATED CIRCUIT	MC14017BCP SCREENED
U 014	1	51-80368A70	INTEGRATED CIRCUIT	MC1496P SCREENED
U 016	1	51-80345A04	INTEGRATED CIRCUIT	CA3240E SCREENED
U 017	1	51-80368A40	INTEGRATED CIRCUIT	MC14066BCP SCREENED
U 019	1	51-80345A01	INTEGRATED CIRCUIT	CA3140E SCREENED
U 020	1	51-80345A05	INTEGRATED CIRCUIT	HI-201-5 SCREENED
U 021	1	51-80345A01	INTEGRATED CIRCUIT	CA3140E SCREENED
U 022	1	51-80345A04	INTEGRATED CIRCUIT	CA3240E SCREENED
U 023	1	51-80345A04	INTEGRATED CIRCUIT	CA3240E SCREENED
U 024	1	51-80368A40	INTEGRATED CIRCUIT	MC14066BCP SCREENED
U 026	1	51-80345A01	INTEGRATED CIRCUIT	CA3140E SCREENED
U 028	1	51-80368A40	INTEGRATED CIRCUIT	MC14066BCP SCREENED
U 029	1	51-80368A63	INTEGRATED CIRCUIT	LM308AH SCREENED
U 030	1	51-80368A40	INTEGRATED CIRCUIT	MC14066BCP SCREENED
U 034	1	51-80368A49	INTEGRATED CIRCUIT	MC14514BCP SCREENED
U 037	1	51-80368A58	INTEGRATED CIRCUIT	MC14042B SCREENED
U 038	1	51-80368A52	INTEGRATED CIRCUIT	MC14555BCP SCREENED
U 039	1	51-80368A64	INTEGRATED CIRCUIT	LM324N SCREENED
U 040	1	51-80368A64	INTEGRATED CIRCUIT	LM324N SCREENED
U 041	1	51-80368A58	INTEGRATED CIRCUIT	MC14042B SCREENED
U 042	1	51-80368A58	INTEGRATED CIRCUIT	MC14042B SCREENED
U 043	1	51-80368A64	INTEGRATED CIRCUIT	LM324N SCREENED
U 044	1	51-80368A64	INTEGRATED CIRCUIT	LM324N SCREENED
U 045	1	51-80368A32	INTEGRATED CIRCUIT	MC14011BCP SCREENED
U 046	1	51-80345A16	INTEGRATED CIRCUIT	MC14028BCP SCREENED
U 047	1	51-80368A58	INTEGRATED CIRCUIT	MC14042B SCREENED
U 048	1	51-80368A58	INTEGRATED CIRCUIT	MC14042B SCREENED
U 049	1	51-80368A58	INTEGRATED CIRCUIT	MC14042B SCREENED
U 050	1	51-80368A56	INTEGRATED CIRCUIT	MC14001BCP SCREENED
U 051	1	51-80368A64	INTEGRATED CIRCUIT	LM324N SCREENED
U 052	1	51-80368A40	INTEGRATED CIRCUIT	MC14066BCP SCREENED
U 054	1	51-80345A10	INTEGRATED CIRCUIT	LM393N SCREENED
U 055	1	51-80368A10	INTEGRATED CIRCUIT	SN74LS02NS SCREENED
U 056	1	51-80368A56	INTEGRATED CIRCUIT	MC14001BCP SCREENED
U 057	1	51-80368A64	INTEGRATED CIRCUIT	LM324N SCREENED
U 058	1	51-80368A66	INTEGRATED CIRCUIT	MC1403U SCREENED
U 059	1	51-80345A10	INTEGRATED CIRCUIT	LM393N SCREENED
U 060	1	51-80345A01	INTEGRATED CIRCUIT	CA3140E SCREENED
U 061	1	51-80368A36	INTEGRATED CIRCUIT	MC14049BCP SCREENED
VR001	1	48-86850C13	DIODE,ZENER	5.1V-5-.4
VR002	1	48-86850C13	DIODE,ZENER	5.1V-5-.4
VR003	1	48-86850C13	DIODE,ZENER	5.1V-5-.4

Figure 9-3. Scope/DVM Control Module A3 (RTC-4008B) Parts Location Diagram (Sheet 3 of 3)

SECTION 10

RECEIVER (A4)

10-1. General. The Receiver down converts the 10.7 MHz first IF signal to 455 kHz. Following the down conversion a linear or a logarithimic IF amplifier provide the gain prior to AM and FM detectors or the spectrum analyzer detector respectively. Post detection filtering provides the wide or narrow band responses for the audio outputs. The audio amplifier for the speaker and the alarm generator are also contained on this module. A block diagram of the Receiver is shown in figure 10-1 and its schematic in figure 10-2.

10-2. Down Converter. The 10.7 MHz IF signal is converted to 455 kHz by mixing with a 10.245 MHz local oscillator. The local oscillator is phase locked to the system 10 MHz frequency standard. A sample of the 10.245 MHz VCO signal is output to the Processor I/O module. There the VCO signal is mixed with 10 MHz, the difference is divided by 49, and the result compared with a 5 kHz reference obtained from the 10 MHz. Any frequency difference causes a correction to be made to the VCO frequency via the 10.245 MHz VCO TV line through the Loop Filter.

10-3. The IF filter following the mixer provides the selectivity for the system. Two bandwidths, ±100 kHz wideband and ±13 kHz narrowband, are processor selectable to correspond the front panel bandwidth control.

10-4. Linear IF Amplifier and Detectors. The linear IF Amplifier amplifies the 455 kHz signal to the AM and FM detectors. The DC signal from the AM detector is fed to the AGC Amplifier and Squelch Detection circuitry. There it is compared to the AGC reference with the resulting AGC signal controlling the gain of the IF Amplifier. For signal present indication and squelch operation the SQUELCH LVL from the front panel is compared to the AGC voltage. When the AGC voltage fall below the squelch level, indicating a strong signal, the SIG PRESENT line is activated. With the SIG PRESENT active the audio is allowed through the select switch and the signal present light on the front panel is illuminated. To warn the operator when the IF input level is beyond the linear range of the IF amplifier, the AGC voltage is also compared to a fixed IF overload level. When this level is exceeded, the IF OVLD line is activated causing the processor to flash the warning on the CRT display.

10-5. The AC component from the AM detector is buffered by the Audio Buffer and then passed to the Audio Select switch. The lower 3 dB corner on the AM audio response is approximately 100 Hz.

10-6. Frequency modulation is recovered by a dual bandwidth phase locked loop discriminator. The bandwidth, wide or narrow, is selected coincident with the IF Filter bandwidth. Audio from the discriminator is applied to the Audio Select switch.

10-7. A 455 kHz Buffer amplifier provides an interface between the IF Amplifier output and the IF processing circuits on the Scope/DVM Control module.

10-8. Audio Switching and Filtering. The output of the AM or FM detector or the SSB AUDIO signal from the Scope/DVM Control module can be selected as the demodulated audio output. Selection is made by the processor depending on the operating mode and the presence of the active state on the SIG PRESENT line. If the SIG PRESENT line is not active, the Audio Select switch is opened squelching the audio signal.

10-9. The Audio Filter provides either wide or narrow band filtering on the recovered audio. For wideband a 0.5 dB bandwidth of 100 kHz is provided while narrowband has a 0.5 dB bandwidth of 3 kHz. The output of the filter is separately buffered to three signal lines. The DEMOD CAL AUD signal is used on the Scope/DVM

Control module for modulation determination, the DEMOD OUT signal goes to the front panel jack, and the VOL CNTL AUD provides the drive to the speaker audio amplifier.

10-10. Logarithmic Amplifier and Detector. For the spectrum analyzer function the logarithmic IF amplifier processes the input signal level over an 80 dB range. The Amplifier is composed of four 20 dB sections summed together. Amplitude detection at the output of the amplifier provides the SPECT ANA VERT signal to the Scope/DVM Control module.

10-11. Alarm Generator and Audio Amplifier. An astable multivibrator operating at 1.2 kHz is the Alarm Generator. The Alarm signal is controlled by the processor and is summed with the VOL CNTL AUD RTN signal at the input of the Audio Amplifier. The SPKR AUD output of the amplifier has 0.5 watt capability and is connected directly to the system speaker.

10-12. Module Control. Address decoding for the two control latches on this module is performed on the Synthesizer module. The two decoded lines, RF LCH ADD 13 and RF LCH ADD 14, determine which Control Latch the four bit data bus, RF DATA BUS 0-3, will be stored.

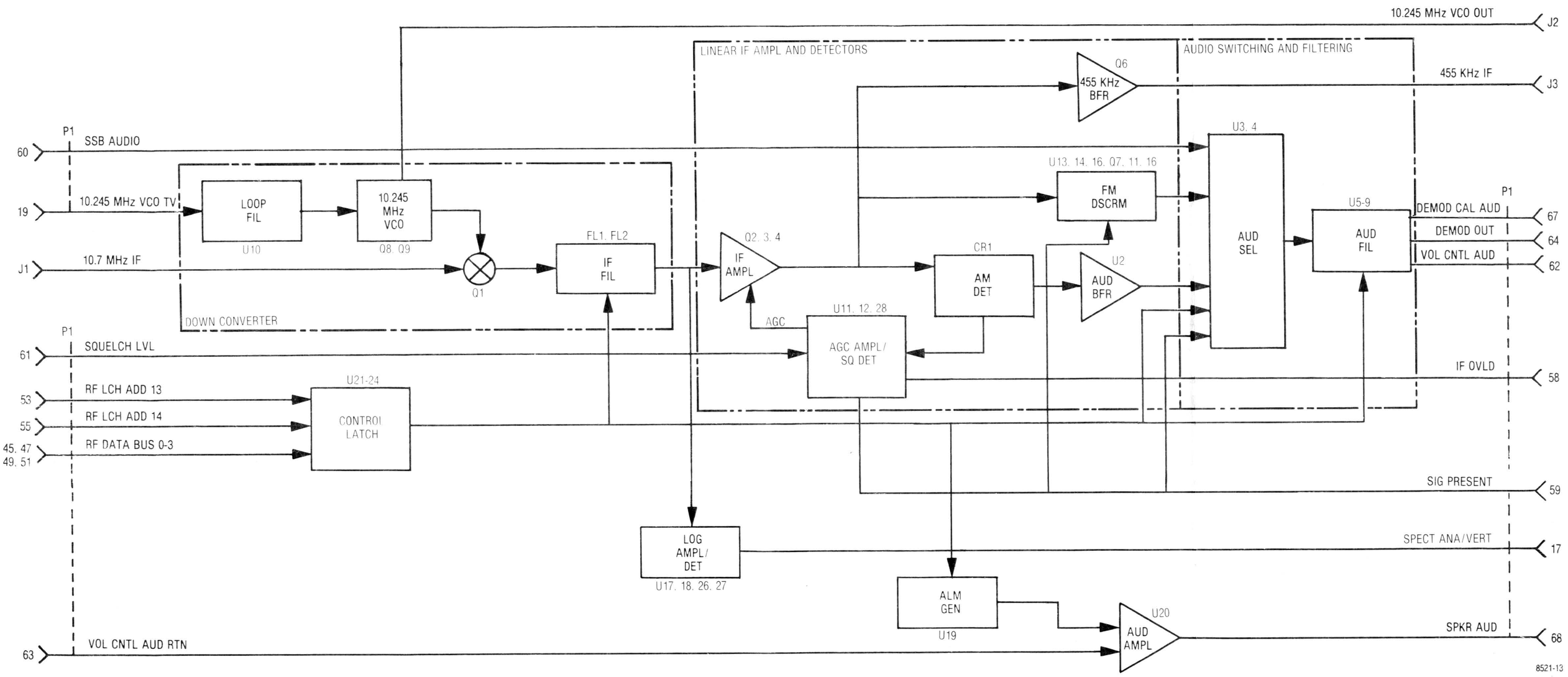

Figure 10-1. Receiver A4 Block Diagram

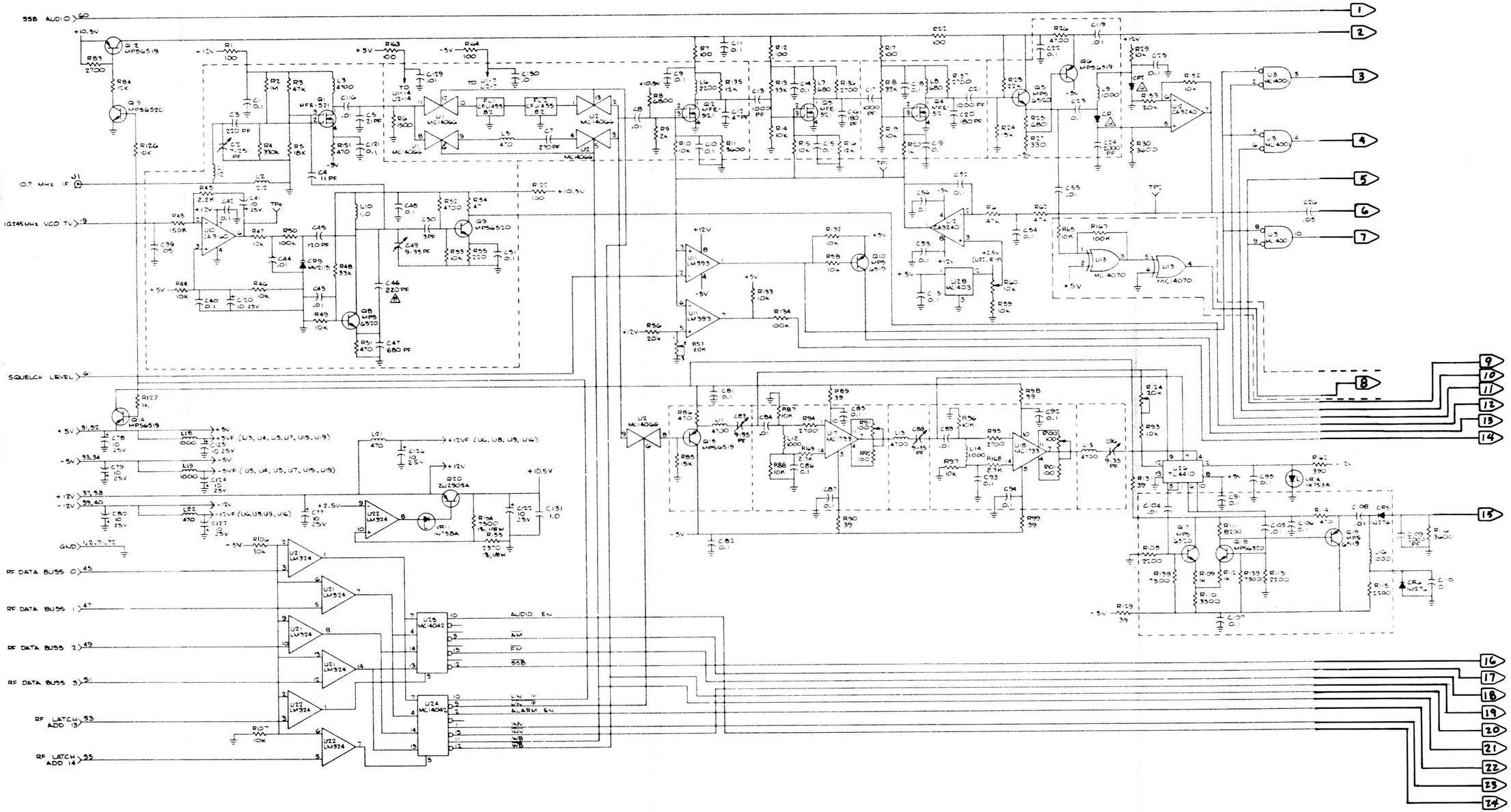

Figure 10-2. Receiver A4 Schematic Diagram (Sheet 1 of 2)

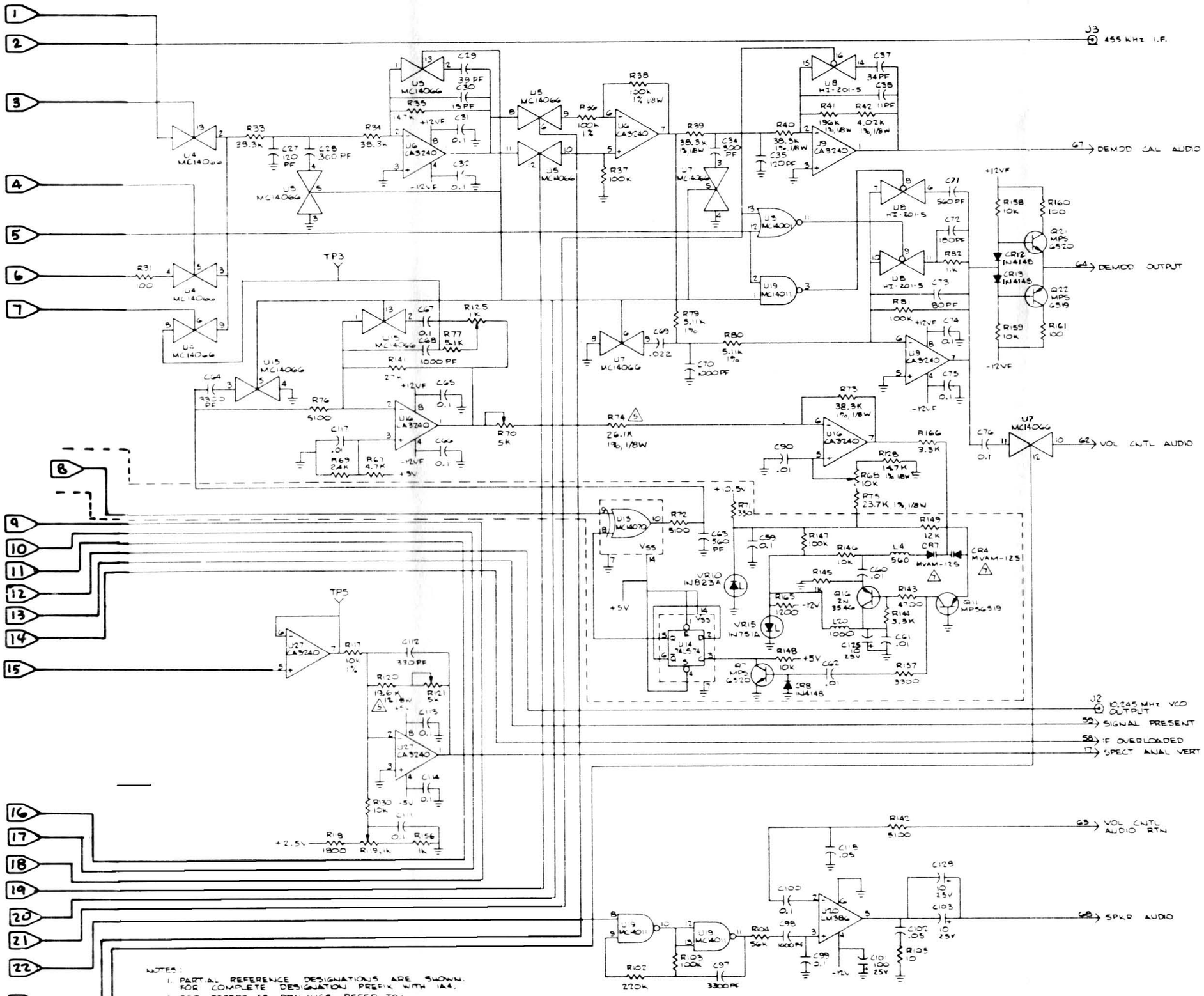

REF DES	DEVICE TYPE	GND	+V	-V	+VF	-VF	NO CONN
U1	MC14066		-5/14	-5/7			2,3,4,5,9,10,11,12
U2	MC14066		-5/14	-5/7			
U3	MC14001				+5/14	-5/7	
U4	MC14066				+5/14	-5/7	10,11,12
U5	MC14066	3			+5/14	-5/7	
U6	CA3240	3			+12/8	-12/4	
U7	MC14066	4,8			+5/14	-5/7	2,3
U8	HI-201-5	5			+12/8	-12/4	2,3,12
U9	CA3240	3,5			+12/8	-12/4	
U10	CA3160	4	+12/7				1,5,6
U11	LM393	4	+12/8	-5/4			
U12	CA3240		+12/8	-5/4			
U13	MC14070	6,7	-5/14				2,3
U14	74LS74	7	+5/14				8,9,10,11,12,13
U15	MC14066	4,6,12			+5/14	-5/7	8,9,10,11
U16	CA3240				+12/8	-12/4	
U17	MC1733		+5/10	-5/5			2,3,6,8,9,12,13
U18	MC1733		+5/10	-5/5			2,3,6,8,9,12,13
U19	MC14011				+5/14	-5/7	4,5,6
U20	LM386	6		-12/4			1,7,8
U21	LM324		+5/4	-5/11			
U22	LM324		-5/4	-5/11			1,2,3,4
U23	MC14042		+5/6,16	-5/8			1,2,9,11
U24	MC14042		+5/6,16	-5/8			3
U26	TL4410	13	+5/8	-6/2			1,3,14
U27	CA3240	3	+5/8	-5/4			5,6,7
U28	MC1403A	3	+5/1				4,5,6,7,8

NOTES:

1. PARTIAL REFERENCE DESIGNATIONS ARE SHOWN. FOR COMPLETE DESIGNATION PREFIX WITH 1A4.
2. FOR REFERENCE DRAWINGS REFER TO: 01-P00389N
3. UNLESS OTHERWISE SPECIFIED:
   ALL RESISTORS ARE IN OHMS ±5PCT, 1/4 WATT.
   ALL CAPACITORS ARE IN UF.
   ALL INDUCTORS ARE IN UH.
   ALL VOLTAGES ARE DC.
4

5 RESISTOR SELECTED IN TEST.

6 DIODE IS P/N 48DB4G16A01

7 VARACTORS CR4 AND CR7 ARE SELECTED IN TEST.

8 C46 SELECTED IN TEST VALUES 150 PF, 180 PF, 220 PF NOMINAL, AND 270 PF.

Figure 10-2. Receiver A4 Schematic Diagram (Sheet 2 of 2)

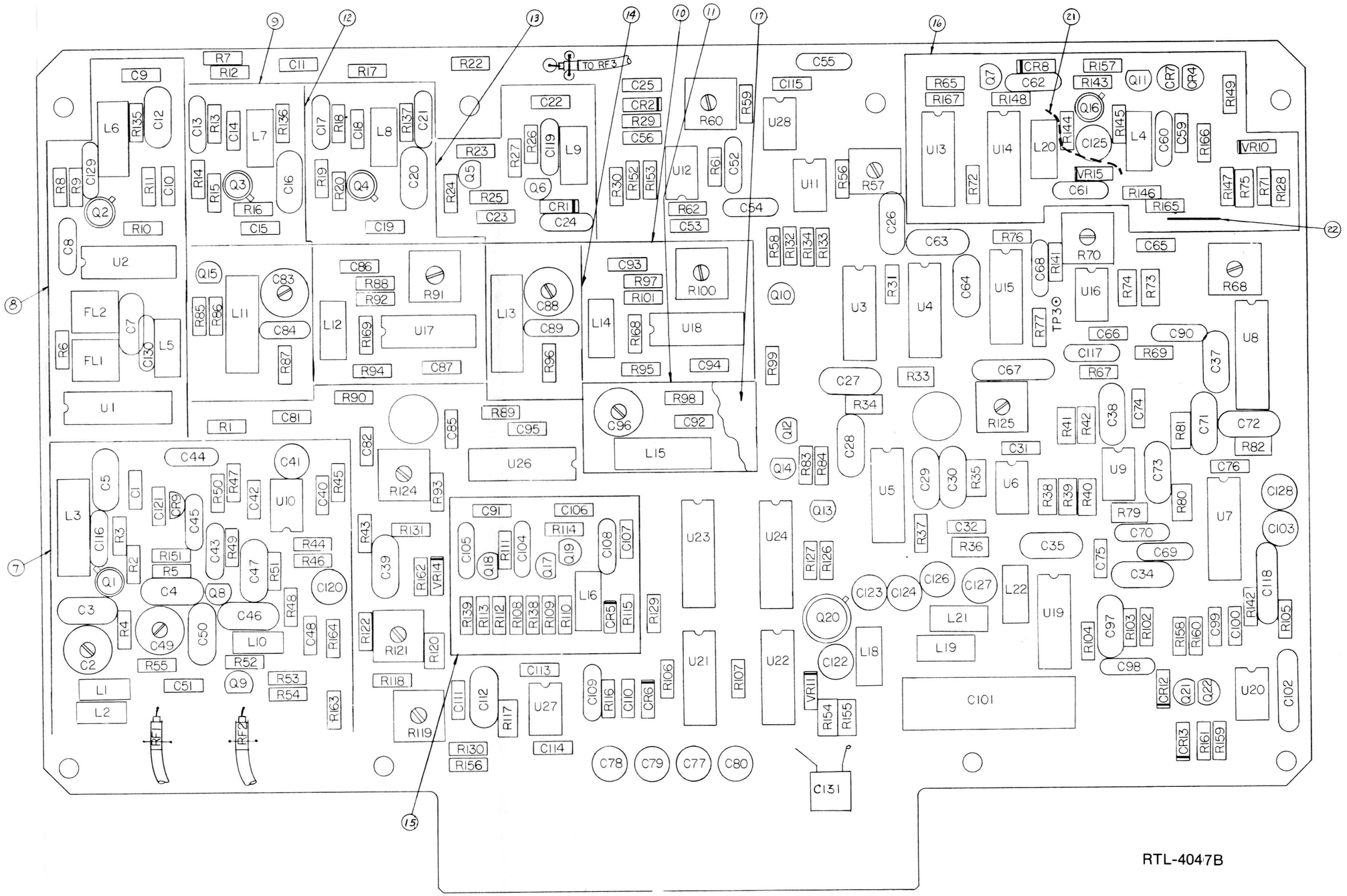

Figure 10-4. Receiver A4 PWB A4A1 Parts Location Diagram

Find No.	Qty. Req.	Part No.	Nomenclature	Part Value
A4		RTL-1002B	RECEIVER MODULE	
001	1	27-80335A38	CHASSIS, RCVR	
003	1	15-P00465N001	COVER,DIGITAL SYNTHES RECIEVER	
005	AR	SN63WRMAP3	SOLDER	
006	AR	11-14167A01	INK	BLACK
007	10	03-P07961V023	SCREW,MACH,SEMS PH EX	4-40X.250
009	2	5C84500B03	EYELET	
010	2	42C84284B01	RETAINER	
011	2	MS35206-214	SCREW,PH	4-40X.312
012	AR	30-84421F13	CABLE,RF	WHITE
013	AR	30-14349A04	CABLE	.085
014	AR		WIRE,BUS	24
A 001	1	RTL-4047B	PWB ASSY RCVR	
J 001	1	9-80331A77	CONNECTOR,RF	
J 002	1	9-80331A77	CONNECTOR,RF	
J 003	1	9-80331A79	CONNECTOR,aea	

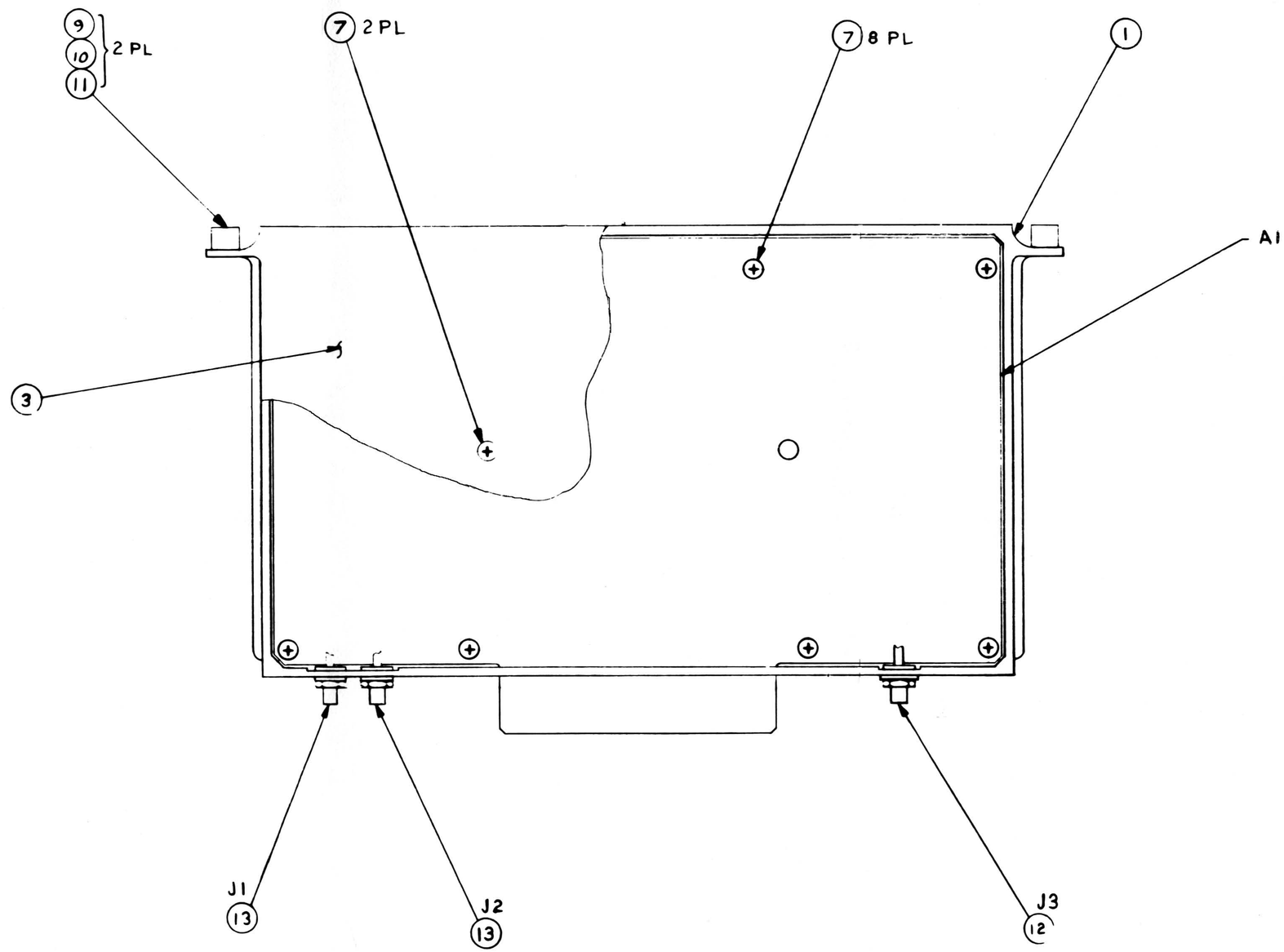

Figure 10-3. Receiver A4 (RTL-10002B) Parts Location Diagram

Find No.	Qty. Req.	Part No.	Nomenclature	Part Value
001	1	84-80335A23	PWB, RECEIVER	
005	AR	SN63WRMAP3	SOLDER	
006	AR	11-14167A01	INK	BLACK
007	1	26-P00367N001	SHIELD	
008	1	26-P00367N002	SHIELD	
009	1	26-P00367N003	SHIELD	
010	1	26-P00367N004	SHIELD	
011	1	26-P00367N005	SHIELD	
012	1	26-P00367N006	SHIELD	
013	1	26-P00367N007	SHIELD	
014	1	26-P00367N008	SHIELD	
015	1	26-P00367N009	SHIELD	
016	1	26-P00367N010	SHIELD	
019	1	26-P00367N011	SHIELD	
020	AR		INSULATION SLEEVING	22 WHT
021	AR		WIRE,TEF	24 WHT
022	AR		WIRE,SOLID BUS	24
C 001	1	21-80369A82	CAPACITOR	.1UF-20-100
C 002	1	19-80370A34	CAPACITOR	7 TO 25PF-200
C 003	1	21D84494B12	CAPACITOR	220PF-5-500
C 004	1	21D84494B37	CAPACITOR	11PF-5-500
C 005	1	21D84494B40	CAPACITOR	21PF-5-500
C 007	1	21D84494B14	CAPACITOR	270PF-5-500
C 008	1	21D82428B59	CAPACITOR	.01UF-2080-200
C 009	1	21-80369A82	CAPACITOR	.1UF-20-100
C 010	1	21-80369A82	CAPACITOR	.1UF-20-100
C 011	1	21-80369A82	CAPACITOR	.1UF-20-100
C 012	1	21D84494B44	CAPACITOR	47PF-5-500
C 013	1	21D82187B14	CAPACITOR	1000PF-10-100
C 014	1	21-80369A82	CAPACITOR	.1UF-20-100
C 015	1	21-80369A82	CAPACITOR	.1UF-20-100
C 016	1	21D84494B46	CAPACITOR	180PF-3-500
C 017	1	21D82187B14	CAPACITOR	1000PF-10-100
C 018	1	21-80369A82	CAPACITOR	.1UF-20-100
C 019	1	21-80369A82	CAPACITOR	.1UF-20-100
C 020	1	21D84494B46	CAPACITOR	180PF-3-500
C 021	1	21D82187B14	CAPACITOR	1000PF-10-100
C 022	1	21-80369A82	CAPACITOR	.1UF-20-100
C 023	1	21-80369A82	CAPACITOR	.1UF-20-100
C 024	1	21D82428B36	CAPACITOR	2000PF-10-200
C 025	1	21-80369A82	CAPACITOR	.1UF-20-100
C 026	1	21C82372C10	CAPACITOR	.05UF-20-25
C 027	1	21D84494B06	CAPACITOR	120PF-5-500
C 028	1	21D84494B15	CAPACITOR	300PF-5-500
C 029	1	21D84494B24	CAPACITOR	39PF-5-500
C 030	1	21D84494B38	CAPACITOR	15PF-5-500
C 031	1	21-80369A82	CAPACITOR	.1UF-20-100
C 032	1	21-80369A82	CAPACITOR	.1UF-20-100
C 034	1	21D84494B15	CAPACITOR	300PF-5-500
C 035	1	21D84494B06	CAPACITOR	120PF-5-500
C 037	1	21D84494B30	CAPACITOR	34PF-5-500
C 038	1	21D84494B37	CAPACITOR	11PF-5-500
C 039	1	21C82372C10	CAPACITOR	.05UF-20-25
C 040	1	21-80369A82	CAPACITOR	.1UF-20-100
C 041	1	23D84665F01	CAPACITOR	10UF-25
C 042	1	21-80369A82	CAPACITOR	.1UF-20-100
C 043	1	21D82428B59	CAPACITOR	.01UF-2080-200
C 044	1	21D82428B59	CAPACITOR	.01UF-2080-200
C 045	1	21D84494B06	CAPACITOR	120PF-5-500
C 046	1	21D84494B12	CAPACITOR	220PF-5-500 NOMINAL
C 046	S01	21-80369A94	CAPACITOR	150PF-5-500
C 046	S01	21-80369A95	CAPACITOR	180PF-5-500
C 046	S01	21-80369A91	CAPACITOR	270PF-5-300
C 047	1	21K865452	CAPACITOR	680PF-10-500
C 048	1	21-80369A82	CAPACITOR	.1UF-20-100
C 049	1	CV31D350	CAPACITOR	9 TO 35PF-200
C 050	1	21D84426B51	CAPACITOR	3PF-5-500
C 051	1	21-80369A82	CAPACITOR	.1UF-20-100
C 052	1	21-80348A89	CAPACITOR	.1UF-20
C 053	1	21-80369A82	CAPACITOR	.1UF-20-100
C 054	1	21-80348A89	CAPACITOR	.1UF-20
C 055	1	21D82428B59	CAPACITOR	.01UF-2080-200
C 056	1	21-80369A82	CAPACITOR	.1UF-20-100
C 059	1	21-80369A82	CAPACITOR	.1UF-20-100
C 060	1	21D82428B59	CAPACITOR	.01UF-2080-200
C 061	1	21D82428B59	CAPACITOR	.01UF-2080-200
C 062	1	21D82428B59	CAPACITOR	.01UF-2080-200
C 063	1	21-P07954V001	CAPACITOR,MODIFIED	560PF-10-500
C 064	1	21D82428B10	CAPACITOR	3300PF-10-100
C 065	1	21-80369A82	CAPACITOR	.1UF-20-100
C 066	1	21-80369A82	CAPACITOR	.1UF-20-100
C 067	1	21-80370A05	CAPACITOR	.1UF-10-100
C 068	1	21D82187B14	CAPACITOR	1000PF-10-100
C 069	1	21-80370A04	CAPACITOR	.022UF-10-100
C 070	1	21D82187B14	CAPACITOR	1000PF-10-100
C 071	1	21-P07954V001	CAPACITOR,MODIFIED	560PF-10-500
C 072	1	21D84494B46	CAPACITOR	180PF-3-500
C 073	1	21D84426B21	CAPACITOR	80PF-5-500
C 074	1	21-80369A82	CAPACITOR	.1UF-20-100
C 075	1	21-80369A82	CAPACITOR	.1UF-20-100
C 076	1	21-80369A82	CAPACITOR	.1UF-20-100
C 077	1	23D84665F01	CAPACITOR	10UF-25V
C 078	1	23D84665F01	CAPACITOR	10UF-25V
C 079	1	23D84665F01	CAPACITOR	10UF-25V
C 080	1	23D84665F01	CAPACITOR	10UF-25V
C 081	1	21-80369A82	CAPACITOR	.1UF-20-100
C 082	1	21-80369A82	CAPACITOR	.1UF-20-100
C 083	1	CV31D350	CAPACITOR	9 TO 35PF-200
C 084	1	21D82428B59	CAPACITOR	.01UF-2080-200
C 085	1	21-80369A82	CAPACITOR	.1UF-20-100
C 086	1	21-80369A82	CAPACITOR	.1UF-20-100
C 087	1	21-80369A82	CAPACITOR	.1UF-20-100
C 088	1	CV31D350	CAPACITOR	9 TO 35PF-200
C 089	1	21D82428B59	CAPACITOR	.01UF-2080-200
C 090	1	21D82428B59	CAPACITOR	.01UF-2080-200
C 091	1	21-80369A82	CAPACITOR	.1UF-20-100
C 092	1	21-80369A82	CAPACITOR	.1UF-20-100
C 093	1	21-80369A82	CAPACITOR	.1UF-20-100
C 094	1	21-80369A82	CAPACITOR	.1UF-20-100
C 095	1	21-80369A82	CAPACITOR	.1UF-20-100
C 096	1	CV31D350	CAPACITOR	9 TO 35PF-200
C 097	1	21D82428B10	CAPACITOR	3300PF-10-100
C 098	1	21D82187B14	CAPACITOR	1000PF-10-100
C 099	1	21-80369A82	CAPACITOR	.1UF-20-100
C 100	1	21-80369A82	CAPACITOR	.1UF-20-100
C 101	1	23D82601A19	CAPACITOR	100UF-25WVDC
C 102	1	21C82372C10	CAPACITOR	.05UF-20-25
C 103	1	23D84665F01	CAPACITOR	10UF-25V
C 104	1	21D82428B59	CAPACITOR	.01UF-2080-200
C 105	1	21D82428B59	CAPACITOR	.01UF-2080-200
C 106	1	21-80369A82	CAPACITOR	.1UF-20-100
C 107	1	21-80369A82	CAPACITOR	.1UF-20-100
C 108	1	21D82428B59	CAPACITOR	.01UF-2080-200
C 109	1	21D82428B36	CAPACITOR	2000PF-10-200
C 110	1	21-80369A82	CAPACITOR	.1UF-20-100
C 111	1	21-80369A82	CAPACITOR	.1UF-20-100
C 112	1	21D84494B16	CAPACITOR	330PF-5-500
C 113	1	21-80369A82	CAPACITOR	.1UF-20-100
C 114	1	21-80369A82	CAPACITOR	.1UF-20-100
C 115	1	21-80369A82	CAPACITOR	.1UF-20-100
C 116	1	21D82428B59	CAPACITOR	.01UF-2080-200
C 117	1	21D82428B59	CAPACITOR	.01UF-2080-200
C 118	1	21C82372C10	CAPACITOR	.05UF-20-25
C 119	1	21D82428B59	CAPACITOR	.01UF-2080-200
C 120	1	23D84665F01	CAPACITOR	10UF-25V
C 121	1	21-80369A82	CAPACITOR	.1UF-20-100
C 122	1	23D84665F01	CAPACITOR	10UF-25V
C 123	1	23D84665F01	CAPACITOR	10UF-25V
C 124	1	23D84665F01	CAPACITOR	10UF-25V
C 125	1	23D84665F01	CAPACITOR	10UF-25V
C 126	1	23D84665F01	CAPACITOR	10UF-25V
C 127	1	23D84665F01	CAPACITOR	10UF-25V
C 128	1	23D84665F01	CAPACITOR	10UF-25V
C 129	1	21D82428B59	CAPACITOR	.01UF-2080-200
C 130	1	21D82428B59	CAPACITOR	.01UF-2080-200
C 131	1	CK06BX105M	CAPACITOR	1UF-20-50
CR001	1	48D84616A01	DIODE	
CR002	1	48D84616A01	DIODE	
CR004	S01	48-80369A02	VARACTOR	MVAM-125 SCREENED
CR004	S01	48-80369A03	VARACTOR	MVAM-125 SCREENED
CR004	S01	48-80369A04	VARACTOR	MVAM-125 SCREENED
CR004	S01	48-80369A05	VARACTOR	MVAM-125 SCREENED
CR005	1	48-83192A09	DIODE	
CR006	1	48-83192A09	DIODE	
CR007	S01	48-80369A02	VARACTOR	MVAM-125 SCREENED
CR007	S01	48-80369A03	VARACTOR	MVAM-125 SCREENED
CR007	S01	48-80369A04	VARACTOR	MVAM-125 SCREENED
CR007	S01	48-80369A05	VARACTOR	MVAM-125 SCREENED
CR008	1	48-84463K02	DIODE	
CR009	1	48-80345A75	DIODE,VARACTOR	
CR012	1	48-84463K02	DIODE	
CR013	1	48-84463K02	DIODE	
FL001	1	48-80346A09	FILTER	
FL002	1	48-80346A09	FILTER	
L 001	1	24-80369A30	COIL	12UH
L 002	1	24-80369A17	COIL	2.2UH
L 003	1	24-80369A44	COIL	4700UH
L 004	1	24-80369A40	COIL	560UH
L 005	1	24-80348A83	COIL	470UH
L 006	1	24-80369A43	COIL	2200UH
L 007	1	24-80369A41	COIL	680UH
L 008	1	24-80369A41	COIL	680UH
L 009	1	24-80369A42	COIL	1000UH
L 010	1	24-80369A18	COIL	1UH
L 011	1	24-80369A44	COIL	4700UH
L 012	1	24-80369A42	COIL	1000UH
L 013	1	24-80369A44	COIL	4700UH
L 014	1	24-80369A42	COIL	1000UH
L 015	1	24-80369A44	COIL	4700UH
L 016	1	24-80369A42	COIL	1000UH
L 018	1	24-80369A42	COIL	1000UH
L 019	1	24-80369A42	COIL	1000UH
L 020	1	24-80369A42	COIL	1000UH
L 021	1	24-80348A83	COIL	470UH
L 022	1	24-80348A83	COIL	470UH
Q 001	1	MFE521	TRANSISTOR	
Q 002	1	MFE521	TRANSISTOR	
Q 003	1	MFE521	TRANSISTOR	
Q 004	1	MFE521	TRANSISTOR	
Q 005	1	48-80368A91	TRANSISTOR	MPS6520 SCREENED
Q 006	1	48-80368A92	TRANSISTOR	MPS6519 SCREENED
Q 007	1	48-80368A91	TRANSISTOR	MPS6520 SCREENED
Q 008	1	48-80368A91	TRANSISTOR	MPS6520 SCREENED
Q 009	1	48-80368A91	TRANSISTOR	MPS6520 SCREENED
Q 010	1	48-80368A92	TRANSISTOR	MPS6519 SCREENED
Q 011	1	48-80368A92	TRANSISTOR	MPS6519 SCREENED
Q 012	1	48-80368A92	TRANSISTOR	MPS6519 SCREENED

Figure 10-4. Receiver A4PWB Parts Location Diagram RTL-4047B

Find No.	Qty. Req.	Part No.	Nomenclature	Part Value
Q 013	1	48-80368A91	TRANSISTOR	MPS6520 SCREENED
Q 014	1	48-80368A92	TRANSISTOR	MPS6519 SCREENED
Q 015	1	48-80368A92	TRANSISTOR	MPS6519 SCREENED
Q 016	1	48-83827D31	TRANSISTOR	
Q 017	1	48-80368A91	TRANSISTOR	MPS6520 SCREENED
Q 018	1	48-80368A91	TRANSISTOR	MPS6520 SCREENED
Q 019	1	48-80368A92	TRANSISTOR	MPS6519 SCREENED
Q 020	1	48-84302A22	TRANSISTOR	
Q 021	1	48-80368A91	TRANSISTOR	MPS6520 SCREENED
Q 022	1	48-80368A92	TRANSISTOR	MPS6519 SCREENED
R 001	1	6S124A25	RESISTOR	100-5-1/4
R 002	1	6S124B22	RESISTOR	1M-5-1/4
R 003	1	6S124A89	RESISTOR	47K-5-1/4
R 004	1	6S124B10	RESISTOR	330K-5-1/4
R 005	1	6S124A79	RESISTOR	18K-5-1/4
R 006	1	6S124A53	RESISTOR	1.5K-5-1/4
R 007	1	6S124A25	RESISTOR	100-5-1/4
R 008	1	6S124A69	RESISTOR	6.8K-5-1/4
R 009	1	6S124A56	RESISTOR	2.0K-5-1/4
R 010	1	6S124A73	RESISTOR	10K-5-1/4
R 011	1	6S124A67	RESISTOR	5.6K-5-1/4
R 012	1	6S124A25	RESISTOR	100-5-1/4
R 013	1	6S124A85	RESISTOR	33K-5-1/4
R 014	1	6S124A73	RESISTOR	10K-5-1/4
R 015	1	6S124A73	RESISTOR	10K-5-1/4
R 016	1	6S124A75	RESISTOR	12K-5-1/4
R 017	1	6S124A25	RESISTOR	100-5-1/4
R 018	1	6S124A85	RESISTOR	33K-5-1/4
R 019	1	6S124A73	RESISTOR	10K-5-1/4
R 020	1	6S124A49	RESISTOR	1K-5-1/4
R 022	1	6S124A25	RESISTOR	100-5-1/4
R 023	1	6S124A81	RESISTOR	22K-5-1/4
R 024	1	6S124A77	RESISTOR	15K-5-1/4
R 025	1	6S124A45	RESISTOR	680-5-1/4
R 026	1	6S124A65	RESISTOR	4.7K-5-1/4
R 027	1	6S124A37	RESISTOR	330-5-1/4
R 029	1	6S124A73	RESISTOR	10K-5-1/4
R 030	1	6S124A62	RESISTOR	3.6K-5-1/4
R 031	1	6S124A25	RESISTOR	100-5-1/4
R 033	1	6-10621D48	RESISTOR	38.3K-1-1/8
R 034	1	6-10621D48	RESISTOR	38.3K-1-1/8
R 035	1	6-10621E05	RESISTOR	147K-1-1/8
R 036	1	6-10621D88	RESISTOR	100K-1-1/8
R 037	1	6S124A97	RESISTOR	100K-5-1/4
R 038	1	6-10621D88	RESISTOR	100K-1-1/8
R 039	1	6-10621D48	RESISTOR	38.3K-1-1/8
R 040	1	6-10621D48	RESISTOR	38.3K-1-1/8
R 041	1	6-10621E17	RESISTOR	196K-1-1/8
R 042	1	6-10621C53	RESISTOR	4020-1-1/8
R 043	1	6S124B02	RESISTOR	150K-5-1/4
R 044	1	6S124A73	RESISTOR	10K-5-1/4
R 045	1	6S124A57	RESISTOR	2.2K-5-1/4
R 046	1	6S124A73	RESISTOR	10K-5-1/4
R 047	1	6S124A73	RESISTOR	10K-5-1/4
R 048	1	6S124A85	RESISTOR	33K-5-1/4
R 049	1	6S124A73	RESISTOR	10K-5-1/4
R 050	1	6S124A97	RESISTOR	100K-5-1/4
R 051	1	6S124A41	RESISTOR	470-5-1/4
R 052	1	6S124A65	RESISTOR	4.7K-5-1/4
R 053	1	6S124A73	RESISTOR	10K-5-1/4
R 054	1	6S124A17	RESISTOR	47-5-1/4
R 055	1	6S124A33	RESISTOR	220-5-1/4
R 056	1	6S124A80	RESISTOR	20K-5-1/4
R 057	1	18D83452F16	RESISTOR,VARIABLE	20K
R 058	1	6S124A73	RESISTOR	10K-5-1/4
R 059	1	6S124A73	RESISTOR	10K-5-1/4
R 060	1	18D83452F14	RESISTOR,VARIABLE	10K
R 061	1	6S124A89	RESISTOR	47K-5-1/4
R 062	1	6S124A89	RESISTOR	47K-5-1/4
R 065	1	6S124A73	RESISTOR	10K-5-1/4
R 067	1	6S124A65	RESISTOR	4.7K-5-1/4
R 068	1	18D83452F14	RESISTOR,VARIABLE	10K
R 069	1	6S124A58	RESISTOR	2.4K-5-1/4
R 070	1	18D83452F12	RESISTOR,VARIABLE	5K
R 071	1	6S124A37	RESISTOR	330-5-1/4
R 072	1	6S124A66	RESISTOR	5.1K-5-1/4
R 073	1	6-10621D48	RESISTOR	38.3K-1-1/8
R 074	1	6-10621D32	RESISTOR	26.1K-1-1/8 NOMINAL
R 074	S01	6-10621D24	RESISTOR	21.5K-1-1/8
R 074	S01	6-10621D36	RESISTOR	28.7K-1-1/8
R 075	1	6-10621D28	RESISTOR	23.7K-1-1/8
R 076	1	6S124A66	RESISTOR	5.1K-5-1/4
R 077	1	6S124A66	RESISTOR	5.1K-5-1/4
R 079	1	06D83175C83	RESISTOR	5.11K-1-1/4
R 080	1	06D83175C83	RESISTOR	5.11K-1-1/4
R 081	1	6-10621D88	RESISTOR	100K-1-1/8
R 082	1	06D83175C05	RESISTOR	11K-1-1/4
R 083	1	6S124A59	RESISTOR	2.7K-5-1/4
R 084	1	6S124A75	RESISTOR	12K-5-1/4
R 085	1	6S124A77	RESISTOR	15K-5-1/4
R 086	1	6S124A41	RESISTOR	470-5-1/4
R 087	1	6S124A73	RESISTOR	10K-5-1/4
R 088	1	6S124A73	RESISTOR	10K-5-1/4
R 089	1	6S124A15	RESISTOR	39-5-1/4
R 090	1	6S124A15	RESISTOR	39-5-1/4
R 091	1	18D83452F04	RESISTOR,VARIABLE	100
R 092	1	6S124A25	RESISTOR	100-5-1/4
R 093	1	6S124A73	RESISTOR	10K-5-1/4
R 094	1	6S124A59	RESISTOR	2.7K-5-1/4
R 095	1	6S124A59	RESISTOR	2.7K-5-1/4
R 096	1	6S124A73	RESISTOR	10K-5-1/4
R 097	1	6S124A73	RESISTOR	10K-5-1/4
R 098	1	6S124A15	RESISTOR	39-5-1/4
R 099	1	6S124A15	RESISTOR	39-5-1/4
R 100	1	18D83452F04	RESISTOR,VARIABLE	100
R 101	1	6S124A25	RESISTOR	100-5-1/4
R 102	1	6S124B06	RESISTOR	220K-5-1/4
R 103	1	6S124A97	RESISTOR	100K-5-1/4
R 104	1	6S124A91	RESISTOR	56K-5-1/4
R 105	1	6S124A01	RESISTOR	10-5-1/4
R 106	1	6S124A73	RESISTOR	10K-5-1/4
R 107	1	6S124A73	RESISTOR	10K-5-1/4
R 108	1	6S124A57	RESISTOR	2.2K-5-1/4
R 109	1	6S124A49	RESISTOR	1K-5-1/4
R 110	1	6S124A61	RESISTOR	3.3K-5-1/4
R 111	1	6S124A71	RESISTOR	8.2K-5-1/4
R 112	1	6S124A49	RESISTOR	1K-5-1/4
R 113	1	6S124A57	RESISTOR	2.2K-5-1/4
R 114	1	6S124A41	RESISTOR	470-5-1/4
R 115	1	6S124A57	RESISTOR	2.2K-5-1/4
R 116	1	6S124A62	RESISTOR	3.6K-5-1/4
R 117	1	06D83175C03	RESISTOR	10K-1-1/4
R 118	1	6S124A55	RESISTOR	1.8K-5-1/4
R 119	1	18D83452F10	RESISTOR,VARIABLE	1K
R 120	S01	6-10621D28	RESISTOR	23.7K-1-1/8
R 120	1	6-10621D20	RESISTOR	19.6K-1-1/8 NOMINAL
R 120	S01	6-10621D36	RESISTOR	28.7K-1-1/8
R 121	1	18D83452F12	RESISTOR,VARIABLE	5K
R 122	1	6S124A25	RESISTOR	100-5-1/4
R 124	1	18D83452F16	RESISTOR,VARIABLE	20K
R 125	1	18D83452F10	RESISTOR,VARIABLE	1K
R 126	1	6S124A73	RESISTOR	10K-5-1/4
R 127	1	6S124A49	RESISTOR	1K-5-1/4
R 128	1	6-10621D08	RESISTOR	14.7K-1-1/8
R 129	1	6S124A15	RESISTOR	39-5-1/4
R 130	1	6S124A73	RESISTOR	10K-5-1/4
R 131	1	6S124A15	RESISTOR	39-5-1/4
R 132	1	6S124A73	RESISTOR	10K-5-1/4
R 133	1	6S124A73	RESISTOR	10K-5-1/4
R 134	1	6S124A97	RESISTOR	100K-5-1/4
R 135	1	6S124A75	RESISTOR	12K-5-1/4
R 136	1	6S124A59	RESISTOR	2.7K-5-1/4
R 137	1	6S124A59	RESISTOR	2.7K-5-1/4
R 138	1	6S124A70	RESISTOR	7.5K-5-1/4
R 139	1	6S124A70	RESISTOR	7.5K-5-1/4
R 141	1	6S124A83	RESISTOR	27K-5-1/4
R 142	1	6S124A66	RESISTOR	5.1K-5-1/4
R 143	1	6S124A65	RESISTOR	4.7K-5-1/4
R 144	1	6S124A61	RESISTOR	3.3K-5-1/4
R 145	1	6S124A49	RESISTOR	1K-5-1/4
R 146	1	6S124A73	RESISTOR	10K-5-1/4
R 147	1	6S124A97	RESISTOR	100K-5-1/4
R 148	1	6S124A73	RESISTOR	10K-5-1/4
R 149	1	6S124A75	RESISTOR	12K-5-1/4
R 151	1	6S124A41	RESISTOR	470-5-1/4
R 152	1	6S124A73	RESISTOR	10K-5-1/4
R 153	1	6S124A80	RESISTOR	20K-5-1/4
R 154	1	6-10621C79	RESISTOR	7.5K-1-1/8
R 155	1	6-10621C31	RESISTOR	2370-1-1/8
R 156	1	6S124A49	RESISTOR	1K-5-1/4
R 157	1	6S124A61	RESISTOR	3.3K-5-1/4
R 158	1	6S124A73	RESISTOR	10K-5-1/4
R 159	1	6S124A73	RESISTOR	10K-5-1/4
R 160	1	6S124A25	RESISTOR	100-5-1/4
R 161	1	6S124A25	RESISTOR	100-5-1/4
R 162	1	6S124A39	RESISTOR	390-5-1/4
R 163	1	6S124A25	RESISTOR	100-5-1/4
R 164	1	6S124A25	RESISTOR	100-5-1/4
R 165	1	6S124A51	RESISTOR	1.2K-5-1/4
R 166	1	6S124A61	RESISTOR	3.3K-5-1/4
R 167	1	6S185A97	RESISTOR	100K-5-1/8
R 168	1	6S185A59	RESISTOR	2.7K-5-1/8
R 169	1	6S185A59	RESISTOR	2.7K-5-1/8
U 001	1	51-80368A40	INTEGRATED CIRCUIT	MC14066BCP SCREENED
U 002	1	51-80368A40	INTEGRATED CIRCUIT	MC14066BCP SCREENED
U 003	1	51-80368A56	INTEGRATED CIRCUIT	MC14001BCP SCREENED
U 004	1	51-80368A40	INTEGRATED CIRCUIT	MC14066BCP SCREENED
U 005	1	51-80368A40	INTEGRATED CIRCUIT	MC14066BCP SCREENED
U 006	1	51-80345A04	INTEGRATED CIRCUIT	CA3240E SCREENED
U 007	1	51-80368A40	INTEGRATED CIRCUIT	MC14066BCP SCREENED
U 008	1	51-80345A05	INTEGRATED CIRCUIT	HI-201-5 SCREENED
U 009	1	51-80345A04	INTEGRATED CIRCUIT	CA3240E SCREENED
U 010	1	51-80345A02	INTEGRATED CIRCUIT	CA3160E SCREENED
U 011	1	51-80345A10	INTEGRATED CIRCUIT	LM393N SCREENED
U 012	1	51-80345A04	INTEGRATED CIRCUIT	CA3240E SCREENED
U 013	1	51-80368A42	INTEGRATED CIRCUIT	MC14070BCP SCREENED
U 014	1	51-80368A24	INTEGRATED CIRCUIT	SN74LS74NS SCREENED
U 015	1	51-80368A40	INTEGRATED CIRCUIT	MC14066BCP SCREENED
U 016	1	51-80345A04	INTEGRATED CIRCUIT	CA3240E SCREENED
U 017	1	51-80345A23	INTEGRATED CIRCUIT	MC1733CP SCREENED
U 018	1	51-80345A23	INTEGRATED CIRCUIT	MC1733CP SCREENED
U 019	1	51-80368A32	INTEGRATED CIRCUIT	MC14011BCP SCREENED
U 020	1	51-80345A09	INTEGRATED CIRCUIT	LM386N SCREENED
U 021	1	51-80368A64	INTEGRATED CIRCUIT	LM324N SCREENED
U 022	1	51-80368A64	INTEGRATED CIRCUIT	LM324N SCREENED
U 023	1	51-80368A58	INTEGRATED CIRCUIT	MC14042B SCREENED
U 024	1	51-80368A58	INTEGRATED CIRCUIT	MC14042B SCREENED
U 026	1	51-80368A65	AMPLIFIER	TL441C SCREENED
U 027	1	51-80345A04	INTEGRATED CIRCUIT	CA3240E SCREENED
U 028	1	51-80368A66	INTEGRATED CIRCUIT	MC1403U SCREENED
VR010	1	48-80368A98	DIODE, ZENER	6.2V-5-.4
VR011	1	48-82256C11	DIODE,ZENER	10V-5-.4
VR014	1	48-84302A09	DIODE,ZENER	6.2V-5-.4
VR015	1	48-86850C13	DIODE,ZENER	5.1V-5-.4

Figure 10-4. Receiver A4 PWB Parts Location Diagram RTL-4047B

SECTION 11

RF SYNTHESIZER (A5)

11-1. General. The RF Synthesizer provides an RF signal source for the frequency range from 10 kHz to 1 GHz in 100 Hz steps. The output frequency is programmed by the processor through the RF control bus and is phase locked to the 10 MHz frequency standard. A reference divider in the module produces outputs of 500 kHz, 50 kHz, 5 kHz, 1 kHz, 100 Hz, and 50 Hz (SYNTH SWP SYNC) each having the same accuracy as the frequency standard. A block diagram of the RF Synthesizer is shown in figure 11-1 and its schematic is shown in figure 11-3.

11-2. Frequency Synthesis Scheme. Four phase locked loops are used to generate the output frequency; a 60.5 MHz loop, a 310-440 MHz loop, the 500 MHz-1000 MHz loop, and the 550 MHz loop. Two of these loops contain programmable dividers, controlled by the microprocessor for varying the frequency. The 310-440 MHz loop is controlled by the four most significant digits of the required frequency and operates in discrete 50 kHz increments. The 60.5 MHz loop is controlled by the three least significant digits of the required frequency and operates in discrete 50 Hz increments.

11-3. The output is derived from three sources, covering the ranges of 10 kHz to 250 MHz, 250 MHz to 500 MHz, and 500 MHz to 1000 MHz. In the first range, 10 kHz to 250 MHz, the output is derived by mixing the fixed 550 MHz signal with 500-1000 MHz signal programmed for frequencies from 550.01 MHz to 800 MHz. For the second range, 250 to 500 MHz, the output is a divide by two of the 500-1000 MHz signal. The final range is the 500-1000 MHz signal directly. The appropriate frequency source is switched to the SYNTH RF output by the Output Select switch.

11-4. A basic flow diagram for programming the RF Synthesizer is shown in figure 11-2. This diagram includes generate and monitor considerations, wideband amplifier control, and modulation control.

11-5. 310-440 MHz Phase Locked Loop. A single 310-440 MHz VCO is phase locked to the 100 kHz reference input using a straight forward loop. The VCO output is divided down to 50 kHz using a programmable two modulus prescaler and divider. Programming of the divider is controlled by the processor to give output frequencies from 310 to 440 MHz in 50 kHz steps.

11-6. 60.5 MHz Phase Locked Loop. The 60.5 MHz loop is programmable over a ±100 kHz range in 50 Hz increments. The 60.5 MHz VCO output is mixed with a 50 MHz signal from the 550 MHz loop. A programmable divider following the mixer divides the 10.5 MHz ± 100 kHz signal down to the 50 Hz reference frequency. A comparison between the divider output and the reference signal by the Phase/Frequency detector results in an error voltage to the VCO which maintains the phase lock.

11-7. 550 MHz Phase Locked Loop. A fixed frequency of 550 MHz is obtained by dividing the 550 MHz VCO by 55 to obtain 10 MHz. The 10 MHz from the divider is compared with the 10 MHz frequency standard in the Phase/Frequency Detector. The resulting error signal is filtered and used to correct the 550 MHz VCO to maintain it in lock.

11-8. A Voltage Controlled Attenuator (VCA) follows the 550 MHz output to level the generator output for frequencies below 1 MHz. The leveling loop in the RF Input module provides the ALC VOLT control signal to maintain the required output level at the front panel RF jack. See paragraph 5-31 for a further description of output leveling.

11-9. 500-1000 MHz Phase Locked Loop. The 500-1000 MHz output is locked to either the sum or the difference of the 310-440 MHz and 60.5 MHz loop output frequencies. In the locked condition, mixing the divide by two output of the 500-1000 MHz VCO's with the 310-440 MHz signal gives a difference frequency equal to the 60.5 MHz output. There are two frequencies at the divide by two output, the 310-440 MHz frequency plus or minus the 60.5 frequency, which will mix down to the correct frequency. However, the sense of the loop is inverted for one compared to the other. Thus the phase switch following the Phase/Frequency Detector determines at which frequency the loop will lock.

11-10. Modulation Control. Modulation of the tuning voltage for the 60.5 MHz VCO provides the frequency modulation of the RF output. Since the modulation sensitivity changes by a factor of two when the 250-500 MHz source is selected, the modulation control provides programmable gain control to maintain constant sensitivity at the FM MOD and SWEEP inputs. Additionally, the wideband modulation mode requires a gain of four beyond that for the narrowband mode. Thus under the control of the processor the Modulation Control selects between the SWEEP and FM MOD inputs, provides gains of 1, 2, 4, and 8 for the FM MOD input and gains of 1 and 2 for the SWEEP input. Input modulation sensitivites are 5 kHz/volt and 20 kHz/volt for narrow and wideband FM input and 2 MHz/volt for the sweep input.

11-11. Module Control. Control information is latched in four bit control latches which are loaded by the processor through the RF control bus. The four bit RF ADD BUS 0-3 is decoded by the Address Decoder to determine which Control Latch the four bit RF DATA BUS 0-3 is to be stored. Synchronization of the data transfer is the function of the RF BUS EN line. Two decoded address outputs, RF LATCH 13 and 14, select latches on the receiver module for receiver control. One control latch output, LO/HI BAND SEL, goes to the RF Input module to control the frequency range of the output amplifer.

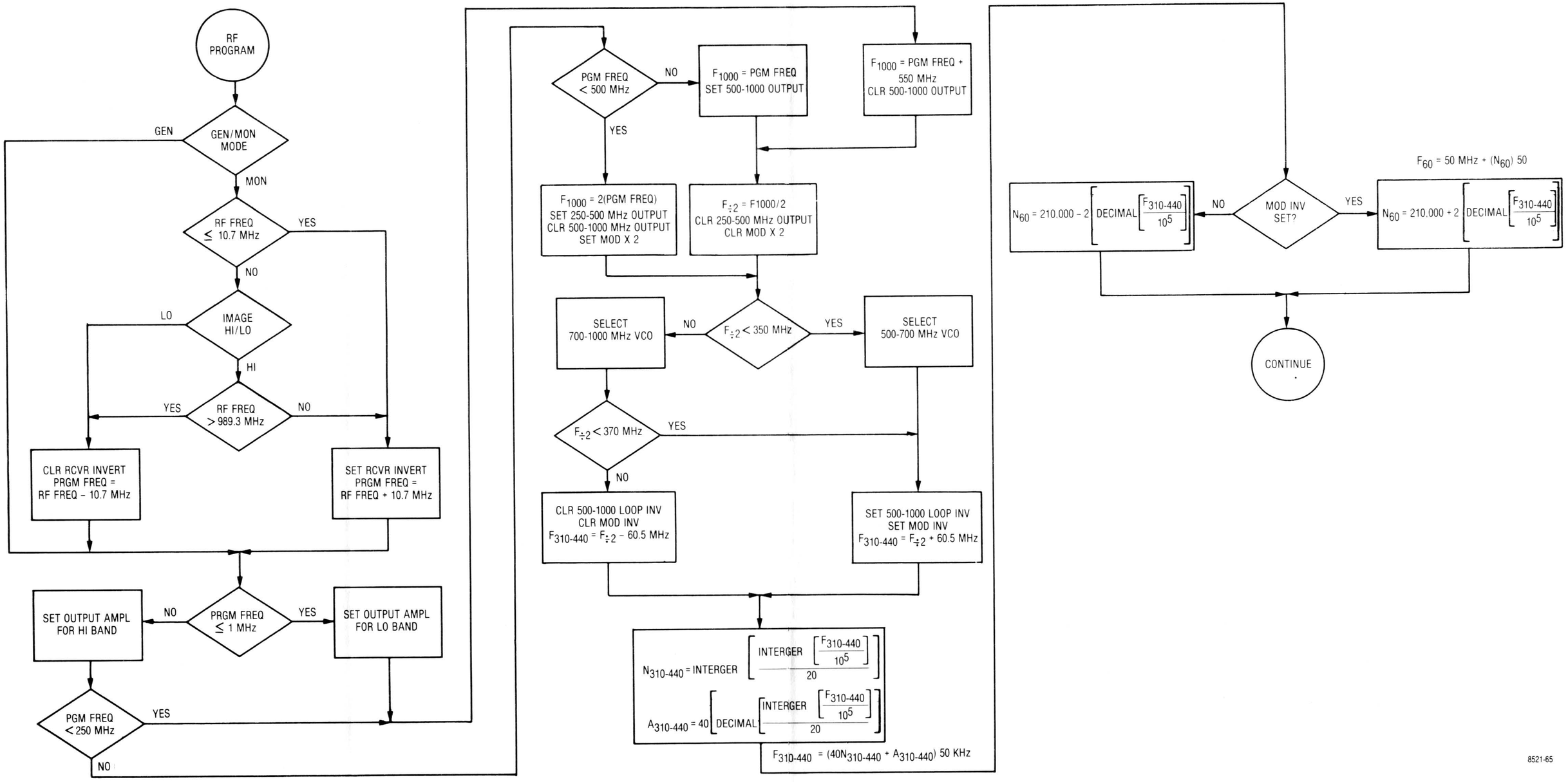

Figure 11-2. Frequency Programming Flow Diagram

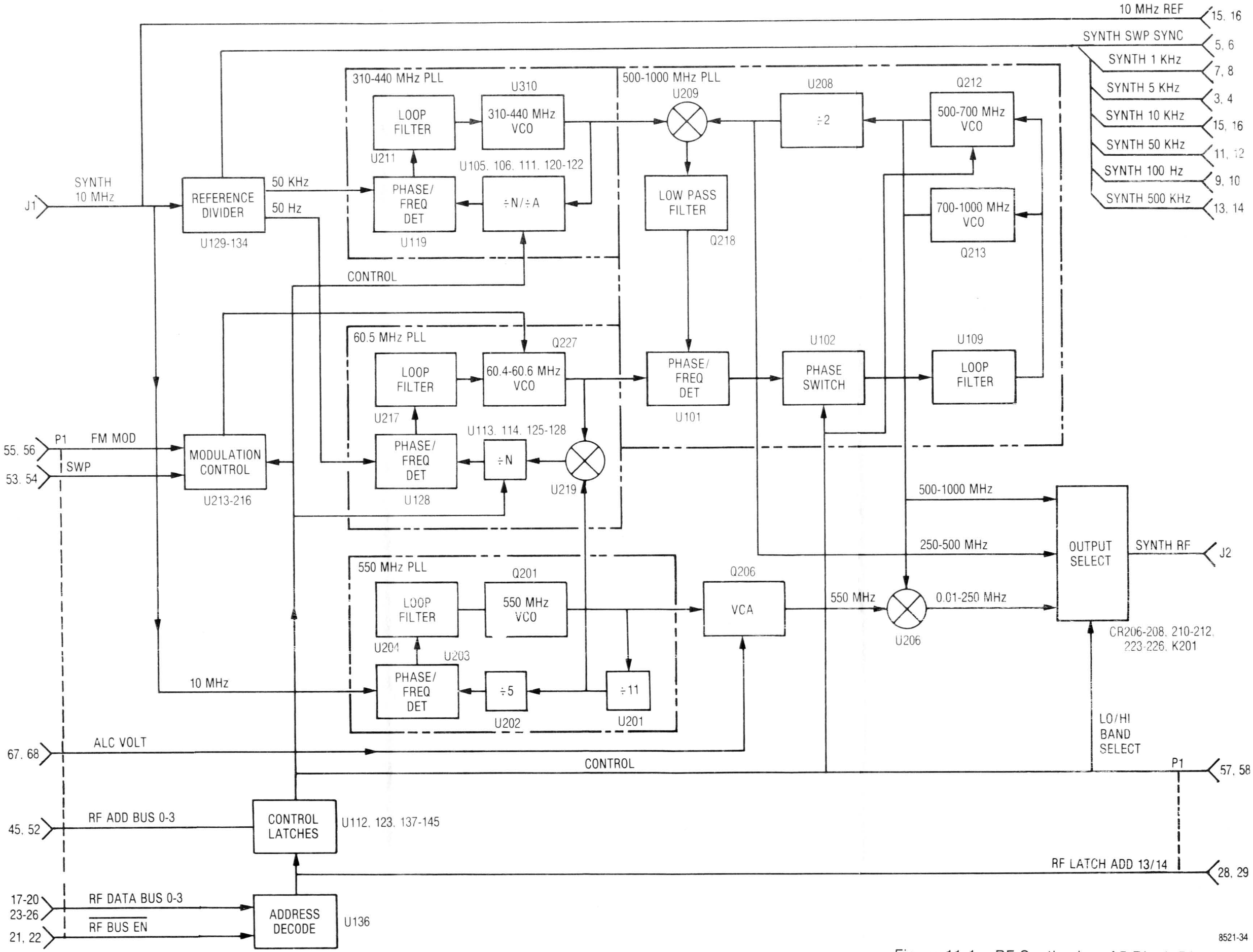

Figure 11-1. RF Synthesizer A5 Block Diagram

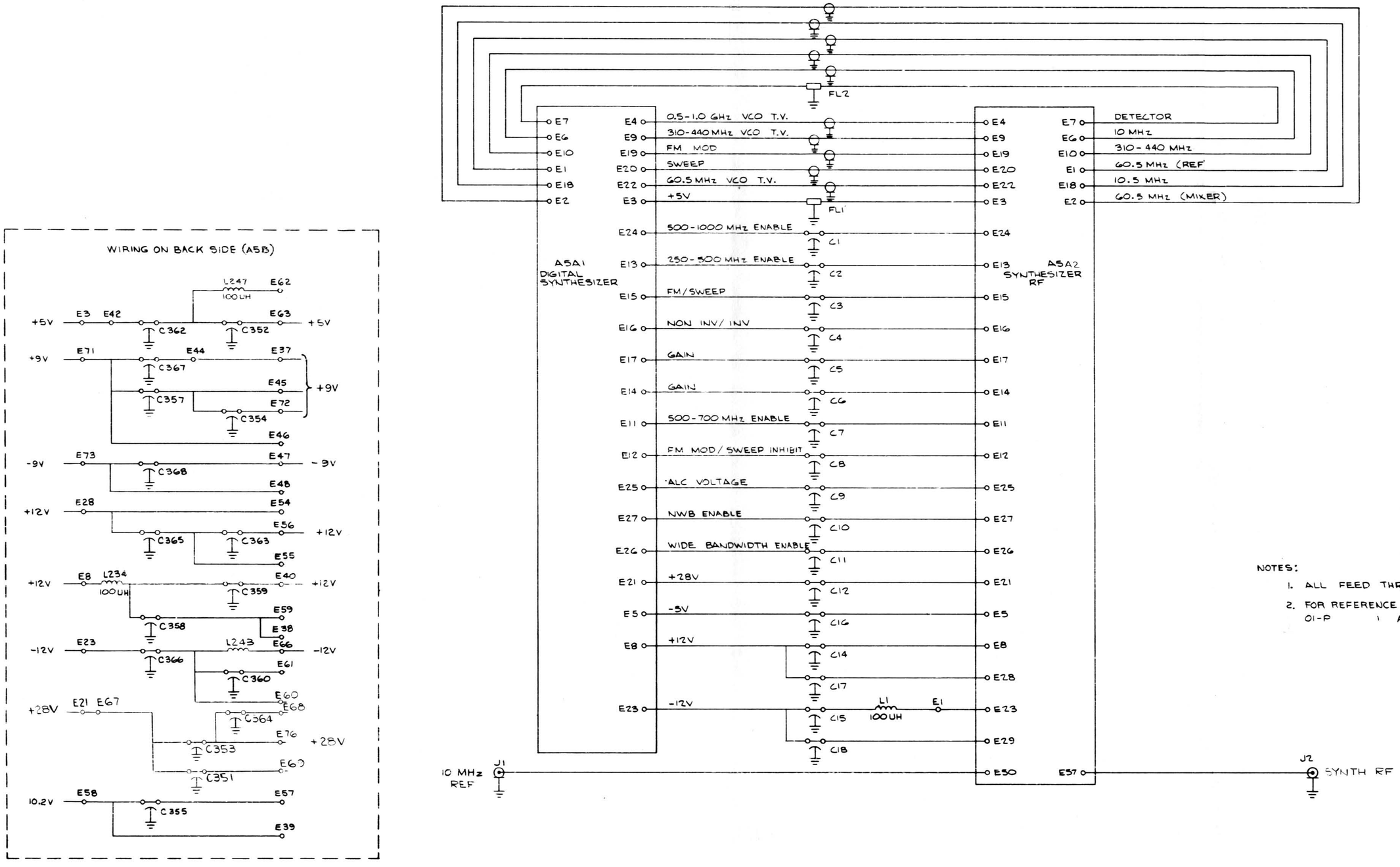

NOTES:

1. ALL FEED THRU CAPACITORS ARE 5000 PF
2. FOR REFERENCE DRAWINGS REFER TO:
   01-P 1 ASSEMBLY

Figure 11-3. RF Synthesizer
A5 Schematic Diagram

Find No.	Qty. Req.	Part No.	Nomenclature	Part Value
		RTC-4009B	DIGITAL SYNTHESIZER	
001	1	84-80335A22	PWB, DIGITAL SYNTHESI	
002	AR	SN63WRP3	SOLDER	
003	AR	11-14167A01	INK	BLACK
004	1	MS35206-214	SCREW,PH	4-40X.312
005	2	MS27183-3	WASHER,FLAT	NO.4
006	1	MS35338-40	WASHER,LOCK	NO.4
007	1	MS35649-242	NUT,HEX	4-40
009	AR		WIRE	24
010	AR	M23053/5-206-C	INSULATION SLEEVING	.250 CLR
C 101	1	23-80369A65	CAPACITOR	30UF-1075-16
C 102	1	21D82187B14	CAPACITOR	1000PF-10-100
C 103	1	21D82187B14	CAPACITOR	1000PF-10-100
C 104	1	21D82187B14	CAPACITOR	1000PF-10-100
C 105	1	21D82187B14	CAPACITOR	1000PF-10-100
C 106	1	21D84494B46	CAPACITOR	180PF-3-500
C 107	1	21C82372C10	CAPACITOR	.05UF-20-25
C 108	1	23D84665F01	CAPACITOR	10UF-25V
C 109	1	21D82428B59	CAPACITOR	.01UF-2080-200
C 110	1	MMJ-035-106R-20	CAPACITOR	10UF-20-35
C 111	1	23D82397D50	CAPACITOR	.22UF-20-35
C 112	1	21D82428B59	CAPACITOR	.01UF-2080-200
C 113	1	21D82428B59	CAPACITOR	.01UF-2080-200
C 114	1	21D82428B59	CAPACITOR	.01UF-2080-200
C 115	1	21D84494B37	CAPACITOR	11PF-5-500
C 116	1	21D84494B37	CAPACITOR	11PF-5-500
C 117	1	21D84494B24	CAPACITOR	39PF-5-500

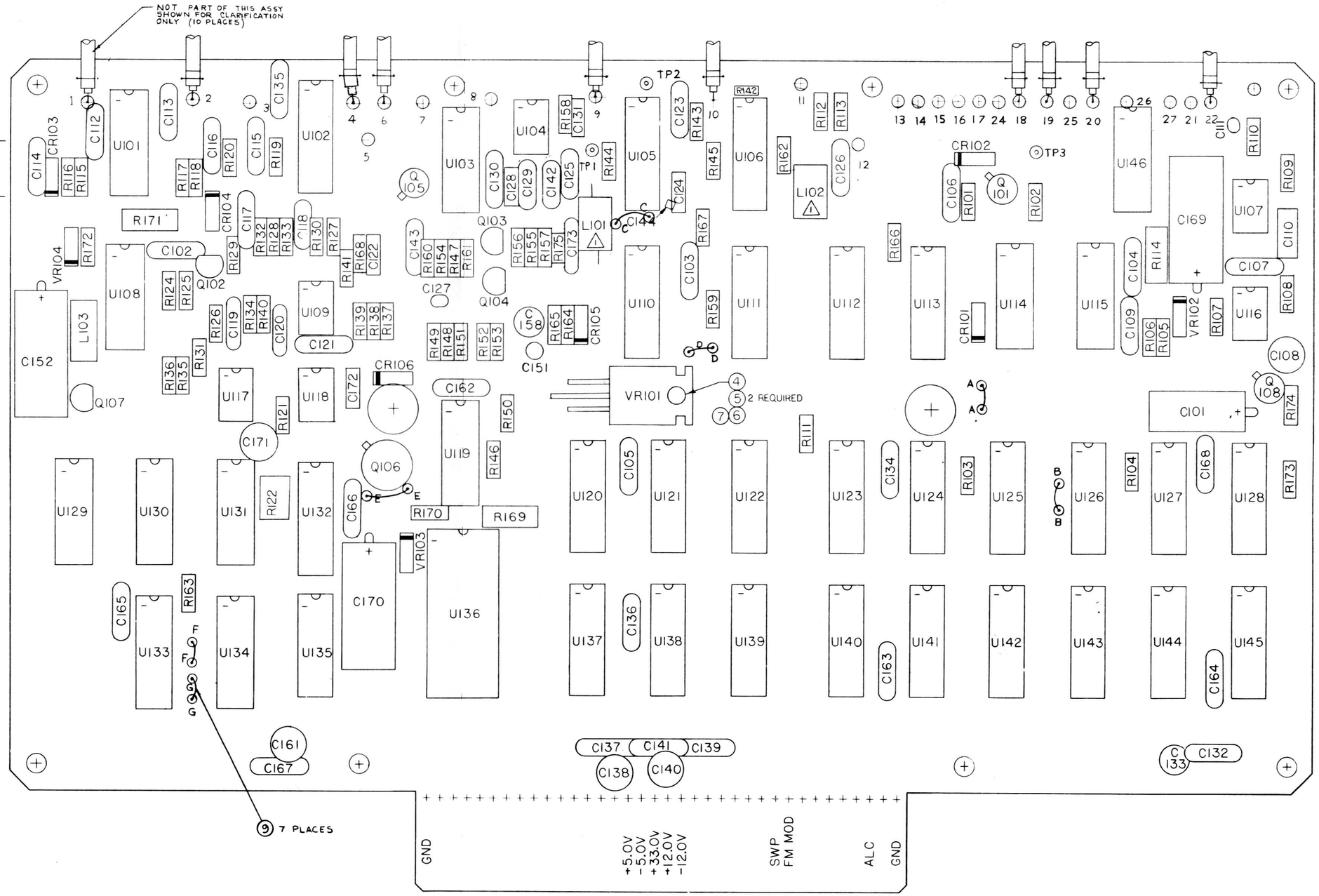

Figure 11-5. Digital Synthesizer A5A1 (RTC-4009B) Parts Location Diagram

Find No.	Qty. Req.	Part No.	Nomenclature	Part Value
C 118	1	21D84494B24	CAPACITOR	39PF-5-500
C 119	1	21D82428B10	CAPACITOR	3300PF-10-100
C 120	1	21D82428B10	CAPACITOR	3300PF-10-100
C 121	1	21D82428B59	CAPACITOR	.01UF-2080-200
C 122	1	21-80369A82	CAPACITOR	.1UF-20-100
C 123	1	21D82187B07	CAPACITOR	470PF-10-500
C 124	1	21-80369A82	CAPACITOR	.1UF-20-100
C 125	1	21D82187B14	CAPACITOR	1000PF-10-100
C 126	1	21D82187B14	CAPACITOR	1000PF-10-100
C 127	1	23D82397D04	CAPACITOR	15UF-20-15
C 128	1	21-80370A02	CAPACITOR	2200PF-10
C 129	1	MMJ-035-106R-20	CAPACITOR	10UF-20-35
C 130	1	21D82428B59	CAPACITOR	.01UF-2080-200
C 131	1	21-80369A99	CAPACITOR	.01UF-10-100
C 132	1	21D82187B14	CAPACITOR	1000PF-10-100
C 133	1	23D84665F01	CAPACITOR	10UF-25V
C 134	1	21D82187B14	CAPACITOR	1000PF-10-100
C 135	1	21D82187B14	CAPACITOR	1000PF-10-100
C 136	1	21D82187B14	CAPACITOR	1000PF-10-100
C 137	1	21D82187B14	CAPACITOR	1000PF-10-100
C 138	1	23D84665F01	CAPACITOR	10UF-25V
C 139	1	21D82187B14	CAPACITOR	1000PF-10-100
C 140	1	23D84665F01	CAPACITOR	10UF-25V
C 141	1	21D82187B14	CAPACITOR	1000PF-10-100
C 142	1	MMJ-035-106R-20	CAPACITOR	10UF-20-35
C 143	1	21D82187B04	CAPACITOR	270PF-10-500
C 144	1	21-80370A18	CAPACITOR	33PF-5-100
C 151	1	23D83441B15	CAPACITOR	1.0UF-20-35
C 152	1	23-80369A66	CAPACITOR	100UF-25V
C 158	1	23D84665F01	CAPACITOR	10UF-25
C 161	1	23D84665F01	CAPACITOR	10UF-25V
C 162	1	21D82187B14	CAPACITOR	1000PF-10-100
C 163	1	21D82187B14	CAPACITOR	1000PF-10-100
C 164	1	21D82187B14	CAPACITOR	1000PF-10-100
C 165	1	21D82187B14	CAPACITOR	1000PF-10-100
C 166	1	21D82187B14	CAPACITOR	1000PF-10-100
C 167	1	21D82187B14	CAPACITOR	1000PF-10-100
C 168	1	21D82187B14	CAPACITOR	1000PF-10-100
C 169	1	23-80369A66	CAPACITOR	100UF-25V
C 170	1	23-80369A66	CAPACITOR	100UF-25V
C 171	1	23D84665F01	CAPACITOR	10UF-25V
C 172	1	21-80369A99	CAPACITOR	.01UF-10-100
C 173	1	21D82187B14	CAPACITOR	.001UF-10-100
CR101	1	48D84616A01	DIODE	
CR102	1	48-84463K02	DIODE	
CR103	1	48-84463K02	DIODE	
CR104	1	48-84463K02	DIODE	
CR105	1	48-86850C47	DIODE	
CR106	1	48-84463K02	DIODE	
L 101	1	24-80369A46	COIL	
L 102	1	24-80369A46	COIL	
L 103	1	WEE-12000	INDUCTOR	12MH
Q 101	1	48-84308A92	TRANSISTOR	
Q 102	1	48-80368A91	TRANSISTOR	MPS6520 SCREENED
Q 103	1	48-80368A92	TRANSISTOR	MPS6519 SCREENED
Q 104	1	48-80368A91	TRANSISTOR	MPS6520 SCREENED
Q 105	1	48-84308A92	TRANSISTOR	
Q 106	1	48-86851C32	TRANSISTOR	
Q 107	1	48-80368A91	TRANSISTOR	MPS6520 SCREENED
Q 108	1	48-2089C01	TRANSISTOR	
R 101	1	6S124A73	RESISTOR	
R 102	1	6S124A49	RESISTOR	1K-5-1/4

Find No.	Qty. Req.	Part No.	Nomenclature	Part Value
R 103	1	6S124A73	RESISTOR	10K-5-1/4
R 104	1	6S124A73	RESISTOR	10K-5-1/4
R 105	1	6S124A73	RESISTOR	10K-5-1/4
R 106	1	6S124A73	RESISTOR	10K-5-1/4
R 107	1	6S124B16	RESISTOR	560K-5-1/4
R 108	1	6S124A49	RESISTOR	1K-5-1/4
R 109	1	6S124A53	RESISTOR	1.5K-5-1/4
R 110	1	6S124A90	RESISTOR	51K-5-1/4
R 111	1	6S124A56	RESISTOR	2.0K-5-1/4
R 112	1	6S124A56	RESISTOR	2.0K-5-1/4
R 113	1	6S124A56	RESISTOR	2.0K-5-1/4
R 114	1	6S125A45	RESISTOR	680-5-1/2
R 115	1	6S124A56	RESISTOR	2.0K-5-1/4
R 116	1	6S124A41	RESISTOR	470-5-1/4
R 117	1	6S124A56	RESISTOR	2.0K-5-1/4
R 118	1	6S124A41	RESISTOR	470-5-1/4
R 119	1	6S124A41	RESISTOR	470-5-1/4
R 120	1	6S124A41	RESISTOR	470-5-1/4
R 121	1	6S124B19	RESISTOR	750K-5-1/4
R 122	1	18D83452F19	RESISTOR,VARIABLE	100K
R 124	1	6S124A49	RESISTOR	1K-5-1/4
R 125	1	6S124A49	RESISTOR	1K-5-1/4
R 126	1	6S124A49	RESISTOR	1K-5-1/4
R 127	1	6S124A41	RESISTOR	470-5-1/4
R 128	1	6S124A41	RESISTOR	470-5-1/4
R 129	1	6S124A53	RESISTOR	1.5K-5-1/4
R 130	1	6S124A53	RESISTOR	1.5K-5-1/4
R 131	1	6S124A73	RESISTOR	10K-5-1/4
R 132	1	6S124A53	RESISTOR	1.5K-5-1/4
R 133	1	6S124A53	RESISTOR	1.5K-5-1/4
R 134	1	6S124A39	RESISTOR	390-5-1/4
R 135	1	6S124A56	RESISTOR	2.0K-5-1/4
R 136	1	6S124A59	RESISTOR	2.7K-5-1/4
R 137	1	6S124A25	RESISTOR	100-5-1/4
R 138	1	6S124A61	RESISTOR	3.3K-5-1/4
R 139	1	6S124A71	RESISTOR	8.2K-5-1/4
R 140	1	6S124A39	RESISTOR	390-5-1/4
R 141	1	6S124A49	RESISTOR	1K-5-1/4
R 142	1	6S185A18	RESISTOR	51-5-1/8
R 143	1	6S124A49	RESISTOR	1K-5-1/4
R 144	1	6S124A41	RESISTOR	470-5-1/4
R 145	1	6S124A41	RESISTOR	470-5-1/4
R 146	1	6S124A51	RESISTOR	1.2K-5-1/4
R 147	1	6S124A07	RESISTOR	18-5-1/4
R 148	1	6S124A53	RESISTOR	1.5K-5-1/4
R 149	1	6S124A35	RESISTOR	270-5-1/4
R 150	1	6S124A41	RESISTOR	470-5-1/4
R 151	1	6S124A41	RESISTOR	470-5-1/4
R 152	1	6S124A57	RESISTOR	2.2K-5-1/4
R 153	1	6S124A23	RESISTOR	82-5-1/4
R 154	1	6S124A77	RESISTOR	15K-5-1/4
R 155	1	6S124A77	RESISTOR	15K-5-1/4
R 156	1	6S124A69	RESISTOR	6.8K-5-1/4
R 157	1	6S124A49	RESISTOR	1K-5-1/4
R 158	1	6S124A49	RESISTOR	1K-5-1/4
R 159	1	6S124A49	RESISTOR	1K-5-1/4
R 160	1	6S124A73	RESISTOR	10K-5-1/4
R 161	1	6S124A49	RESISTOR	1K-5-1/4
R 162	1	6S124A41	RESISTOR	470-5-1/4
R 163	1	6S124A73	RESISTOR	10K-5-1/4
R 164	1	6S124A65	RESISTOR	4.7K-5-1/4

Find No.	Qty. Req.	Part No.	Nomenclature	Part Value
R 165	1	6S124A41	RESISTOR	470-5-1/4
R 166	1	6S124A56	RESISTOR	2.0K-5-1/4
R 167	1	6S124A41	RESISTOR	470-5-1/4
R 168	1	6S124A41	RESISTOR	470-5-1/4
R 169	1	6S125A13	RESISTOR	33-5-1/2
R 170	1	6S124A47	RESISTOR	820-5-1/4
R 171	1	6S125A43	RESISTOR	560-5-1/2
R 172	1	6S124A63	RESISTOR	3.9K-5-1/4
R 173	1	6S124A73	RESISTOR	10K-5-1/4
R 174	1	6S124A27	RESISTOR	120-5-1/4
R 175	1	6S185A49	RESISTOR	1000-5-1/8
U 101	1	51-80321A69	INTEGRATED CIRCUIT	MC12040L SCREENED
U 102	1	51-80368A79	INTEGRATED CIRCUIT	MC10113L SCREENED
U 103	1	51-80368A40	INTEGRATED CIRCUIT	MC14066BCP SCREENED
U 104	1	51-80345A04	INTEGRATED CIRCUIT	CA3240E SCREENED
U 105	1	51-80345A15	INTEGRATED CIRCUIT	MC12513L SCREENED
U 106	1	51-80368A60	INTEGRATED CIRCUIT	MC10131L SCREENED
U 107	1	51-80345A01	INTEGRATED CIRCUIT	CA3140E SCREENED
U 108	1	51-80368A40	INTEGRATED CIRCUIT	MC14066BCP SCREENED
U 109	1	51-80345A01	INTEGRATED CIRCUIT	CA3140E SCREENED
U 110	1	51-80368A59	INTEGRATED CIRCUIT	MC12014L SCREENED
U 111	1	51-80368A74	INTEGRATED CIRCUIT	SN74LS191N SCREENED
U 112	1	51-80368A58	INTEGRATED CIRCUIT	MC14042B SCREENED
U 113	1	51-80368A59	INTEGRATED CIRCUIT	MC12014L SCREENED
U 114	1	51-80368A18	INTEGRATED CIRCUIT	SN74LS21NS SCREENED
U 115	1	51-80368A40	INTEGRATED CIRCUIT	MC14066BCP SCREENED
U 116	1	51-80345A01	INTEGRATED CIRCUIT	CA3140E SCREENED
U 117	1	51-80345A02	INTEGRATED CIRCUIT	CA3160E SCREENED
U 118	1	51-80345A02	INTEGRATED CIRCUIT	CA3160E SCREENED
U 119	1	51-80368A27	INTEGRATED CIRCUIT	MC4044P SCREENED
U 120	1	51-80368A74	INTEGRATED CIRCUIT	SN74LS191N SCREENED
U 121	1	51-80368A74	INTEGRATED CIRCUIT	SN74LS191N SCREENED
U 122	1	51-80368A74	INTEGRATED CIRCUIT	SN74LS191N SCREENED
U 123	1	51-80368A58	INTEGRATED CIRCUIT	MC14042B SCREENED
U 124	1	51-80368A74	INTEGRATED CIRCUIT	SN74LS191N SCREENED
U 125	1	51-80368A74	INTEGRATED CIRCUIT	SN74LS191N SCREENED
U 126	1	51-80368A74	INTEGRATED CIRCUIT	SN74LS191N SCREENED
U 127	1	51-80368A74	INTEGRATED CIRCUIT	SN74LS191N SCREENED
U 128	1	51-80368A53	INTEGRATED CIRCUIT	MC14568BCP SCREENED
U 129	1	51-80368A23	INTEGRATED CIRCUIT	SN74LS73NS SCREENED
U 130	1	51-80368A11	INTEGRATED CIRCUIT	SN74LS04 SCREENED
U 131	1	51-80368A23	INTEGRATED CIRCUIT	SN74LS73NS SCREENED
U 132	1	51-80368A21	INTEGRATED CIRCUIT	SN74LS390NS SCREENED
U 133	1	51-80368A21	INTEGRATED CIRCUIT	SN74LS390NS SCREENED
U 134	1	51-80368A50	INTEGRATED CIRCUIT	MC14518BCP SCREENED
U 135	1	51-80368A11	INTEGRATED CIRCUIT	SN74LS04 SCREENED
U 136	1	51-80368A49	INTEGRATED CIRCUIT	MC14514BCP SCREENED
U 137	1	51-80368A58	INTEGRATED CIRCUIT	MC14042B SCREENED
U 138	1	51-80368A58	INTEGRATED CIRCUIT	MC14042B SCREENED
U 139	1	51-80368A58	INTEGRATED CIRCUIT	MC14042B SCREENED
U 140	1	51-80368A58	INTEGRATED CIRCUIT	MC14042B SCREENED
U 141	1	51-80368A58	INTEGRATED CIRCUIT	MC14042B SCREENED
U 142	1	51-80368A58	INTEGRATED CIRCUIT	MC14042B SCREENED
U 143	1	51-80368A58	INTEGRATED CIRCUIT	MC14042B SCREENED
U 144	1	51-80368A58	INTEGRATED CIRCUIT	MC14042B SCREENED
U 145	1	51-80368A58	INTEGRATED CIRCUIT	MC14042B SCREENED
U 146	1	51-80368A56	INTEGRATED CIRCUIT	MC14001 SCREENED
VR101	1	51-80345A25	INTEGRATED CIRCUIT	MC78M24CT SCREENED
VR102	1	48-83193A59	DIODE,ZENER	5.6V-5-.4
VR103	1	48-83193A59	DIODE,ZENER	5.6V-5-.4
VR104	1	48-82256C50	DIODE,ZENER	3.0-5-.4

Figure 11-5. Digital Synthesizer A5A1 (RTC-4009B) Parts Location Diagram

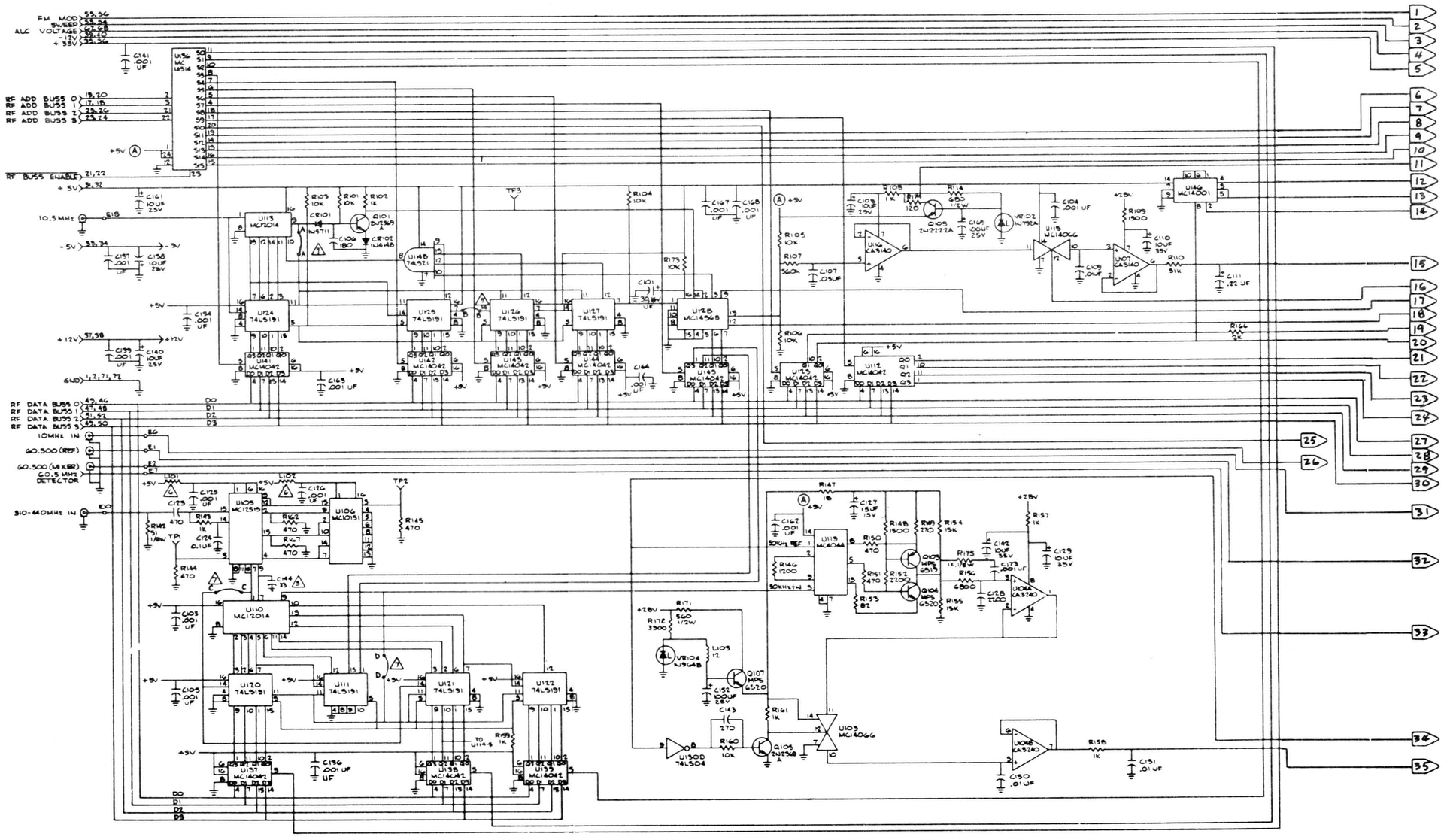

Figure 11-4. Digital Synthesizer A5A1
Schematic Diagram (Sheet 1 of 2)

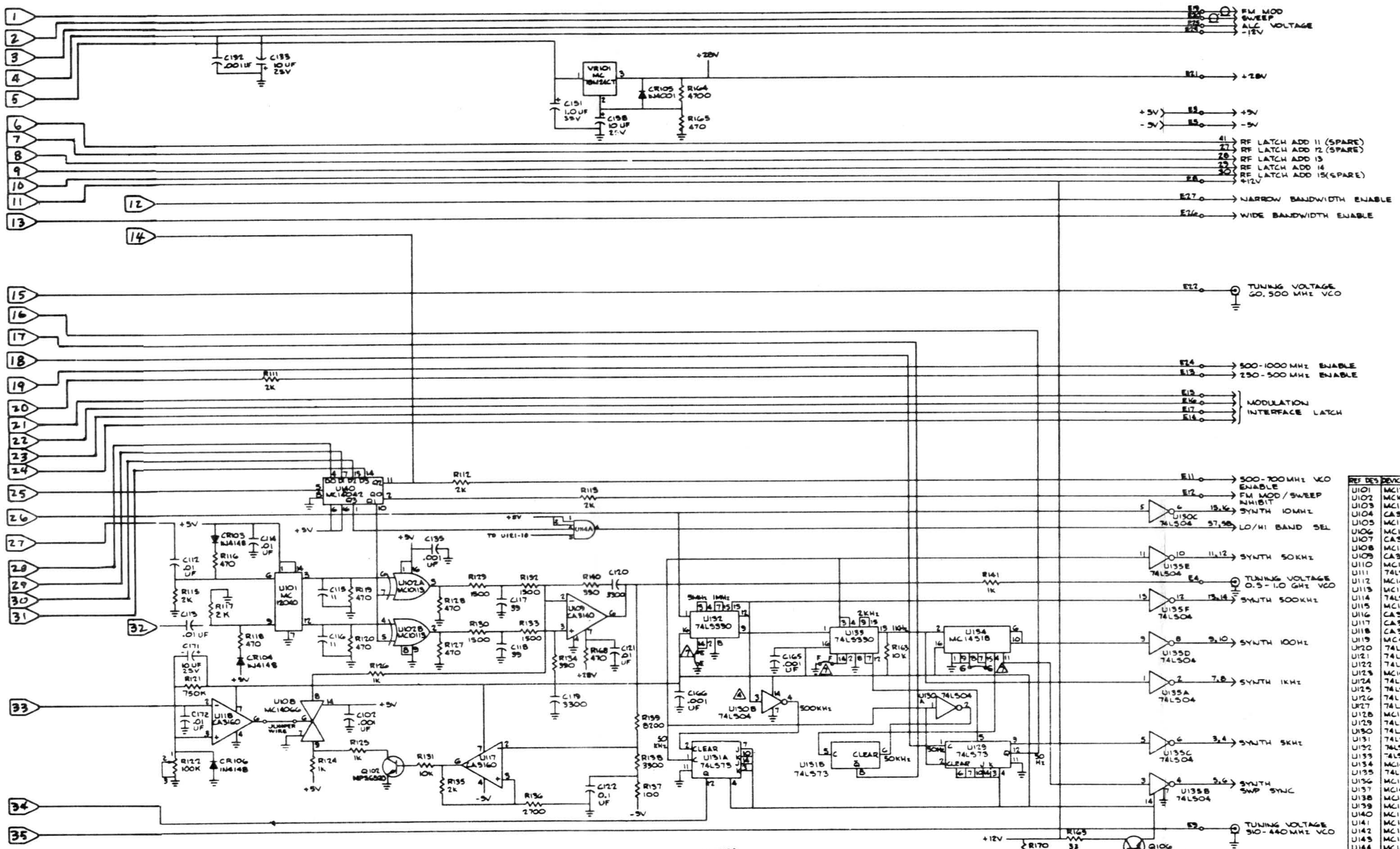

REF DES	DEVICE TYPE	GND	+5V	-5V	+12V	NO CONN
U101	MC12040L	7	1,14			2,4,5,8,10,11,13
U102	MC10113L	8,9	1,16			3,11,12,13,14,15
U103	MC14066	7				1,2,3,4,5,6,8,9,13
U104	CA3240	4				
U105	MC12513L	9				
U106	MC10131L	4,5,6,8,11,12,13				
U107	CA3140	4				1,5,8
U108	MC14066	7	14			1,2,3,4,5,8,9,12,13
U109	CA3140	4				1,5,8
U110	MC12014L	8	16			15
U111	74LS191N5	4,8,9,10	16			2,3,6,7,13
U112	MC14042	8	6,16			3,9,12,15
U113	MC12014L	8	16			13,1,2,3,5,6,7
U114	74LS21N5	7	14,1,2			3,11
U115	MC14066	7	14			1,2,3,4,8,9,13
U116	CA3140	4				1,5,8
U117	CA3160			4		1,5,8
U118	CA3160	4				1,5,8
U119	MC4044	4,7	14			6,10,11,12
U120	74LS191N5	4,8	16			12,13
U121	74LS191N5	4,8	16			12,13
U122	74LS191N5	4,8	16			2,3,6,7,13
U123	MC14042	8	6,16			4,3,9,11,12,15
U124	74LS191N5	4,8	16			12,13
U125	74LS191N5	4,8	16			2,3,6,13
U126	74LS191N5	4,8	16			2,3,6,13
U127	74LS191N5	4,8	16			2,3,6,13
U128	MC14568	4,5,8,9,11,15	16			
U129	74LS73N5	11				8,13
U130	74LS04N5	7,10,11,12,13				
U131	74LS73N5	11				9,13
U132	74LS390N5	2,8,14				5,6,10,11
U133	74LS390N5	2,8,14				5,6,10,11
U134	MC14518	1,7,8,9,15				3,5,12,13,14
U135	74LS04N5	7				
U136	MC14514	12	1,24			
U137	MC14042	8	6,16			3,9,12,15
U138	MC14042	8	6,16			3,9,12,15
U139	MC14042	8	6,16			3,9,12,15
U140	MC14042	8	6,16			3,9,12,15
U141	MC14042	8	6,16			3,9,12,15
U142	MC14042	8	6,16			3,9,12,15
U143	MC14042	8	6,16			3,9,12,15
U144	MC14042	8	6,16			3,9,12,15
U145	MC14042	8	6,16			3,9,12,15
U146	MC14001	7,9	14			11,12,13

NOTES:

1. PARTIAL REFERENCE DESIGNATIONS ARE SHOWN FOR COMPLETE DESIGNATION PREFIX WITH 1A5.
2. FOR REFERENCE DRAWINGS REFER TO:
   01-P00358N PWB ASSY
   01-P00385N MODULE ASSY
3. UNLESS OTHERWISE SPECIFIED:
   ALL RESISTORS ARE IN OHMS ±5 PCT, 1/4 WATT.
   ALL CAPACITORS ARE IN PF.
   ALL INDUCTORS ARE IN MH.
   ALL VOLTAGES ARE DC.

4. EXTRA INPUTS ON 74LS04 (U130, U135) GROUNDED.
5. CHIP CAPACITOR
6. COIL, VK 200-10/3B
7. JUMPER WIRES, MAY BE REMOVED FOR TROUBLESHOOTING.

Figure 11-4. Digital Synthesizer A5A1
Schematic Diagram (Sheet 2 of 2)

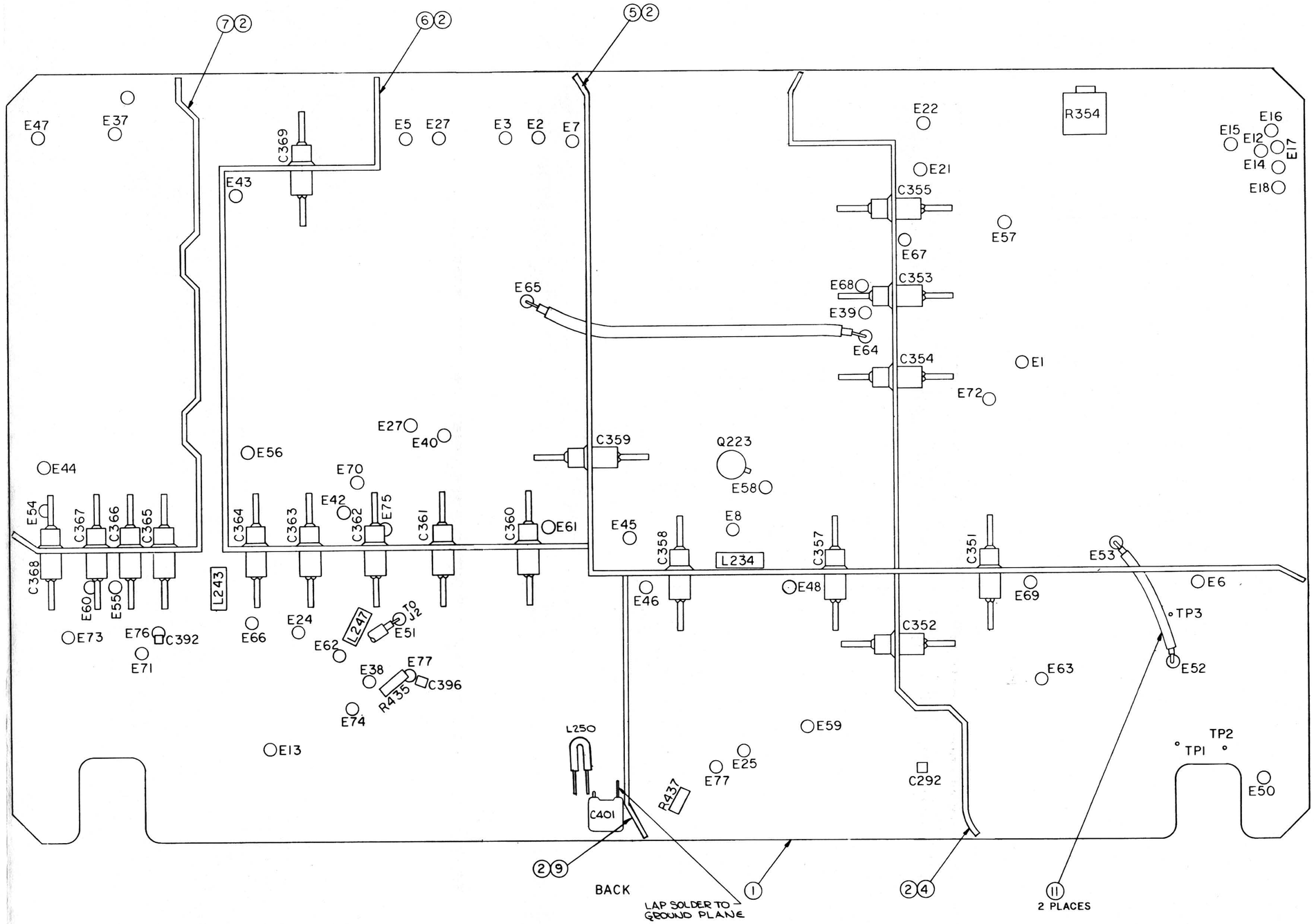

Figure 11-7. RF Synthesizer A5A2
RTC-4010B Parts Location Diagram

NOTES:

1. VALUE OF COMPONENT TO BE SELECTED IN TEST.

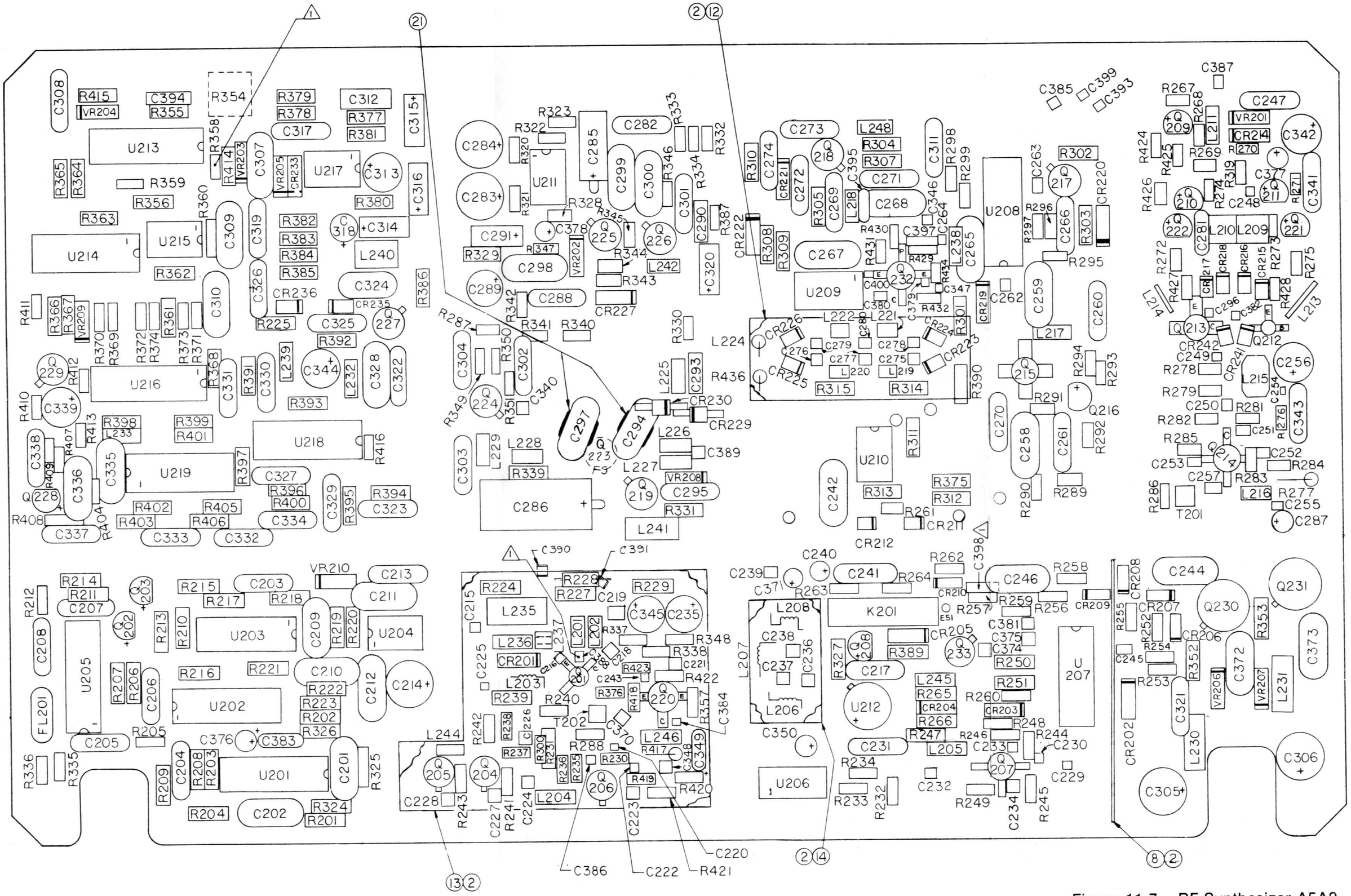
U213
U214
U215
U216
U217
U218
U219
U211
U208
U209
U210
U203
U204
U205
U202
U201
U206
U207
U212
K201
C286
C294
C297
C242
C207
C208
C209
C210
C211
C212
C213
C214
C215
C216
C217
C218
C219
C220
C221
C222
C223
C224
C225
C226
C227
C228
C229
C230
C231
C232
C233
C234
C235
C236
C237
C238
C239
C240
C241
C242
C243
C244
C245
C246
C247
C248
C249
C250
C251
C252
C253
C254
C255
C256
C257
C258
C259
C260
C261
C262
C263
C264
C265
C266
C267
C268
C269
C270
C271
C272
C273
C274
C275
C276
C277
C278
C279
C280
C281
C282
C283
C284
C285
C286
C287
C288
C289
C290
C291
C293
C294
C295
C297
C298
C299
C300
C301
C302
C303
C304
C305
C306
C307
C308
C309
C310
C311
C312
C313
C314
C315
C316
C317
C318
C319
C320
C321
C322
C323
C324
C325
C326
C327
C328
C329
C330
C331
C332
C333
C334
C335
C336
C337
C338
C339
C340
C341
C342
C343
C344
C345
C346
C347
C348
C349
C350
C371
C373
C374
C375
C376
C378
C379
C380
C381
C383
C384
C385
C386
C387
C389
C390
C391
C393
C394
C395
C397
C398
C399
C400
C401
C402
C403
C404
C405
C406
C407
C408
C409
C410
C411
C412
C413
C414
C415
C416
C417
C418
C419
C420
C421
C422
C423
C424
C425
C426
C427
C428
C429
C430
C431
C432
C433
C434
C435
C436
C437
C438
C439
C440
C441
C442
C443
C444
C445
C446
C447
C448
C449
C450
C451
C452
C453
C454
C455
C456
C457
C458
C459
C460
C461
C462
C463
C464
C465
C466
C467
C468
C469
C470
C471
C472
C473
C474
C475
C476
C477
C478
C479
C480
C481
C482
C483
C484
C485
C486
C487
C488
C489
C490
C491
C492
C493
C494
C495
C496
C497
C498
C499
C500
C501
C502
C503
C504
C505
C506
C507
C508
C509
C510
C511
C512
C513
C514
C515
C516
C517
C518
C519
C520
C521
C522
C523
C524
C525
C526
C527
C528
C529
C530
C531
C532
C533
C534
C535
C536
C537
C538
C539
C540
C541
C542
C543
C544
C545
C546
C547
C548
C549
C550
C551
C552
C553
C554
C555
C556
C557
C558
C559
C560
C561
C562
C563
C564
C565
C566
C567
C568
C569
C570
C571
C572
C573
C574
C575
C576
C577
C578
C579
C580
C581
C582
C583
C584
C585
C586
C587
C588
C589
C590
C591
C592
C593
C594
C595
C596
C597
C598
C599
C600
C601
C602
C603
C604
C605
C606
C607
C608
C609
C610
C611
C612
C613
C614
C615
C616
C617
C618
C619
C620
C621
C622
C623
C624
C625
C626
C627
C628
C629
C630
C631
C632
C633
C634
C635
C636
C637
C638
C639
C640
C641
C642
C643
C644
C645
C646
C647
C648
C649
C650
C651
C652
C653
C654
C655
C656
C657
C658
C659
C660
C661
C662
C663
C664
C665
C666
C667
C668
C669
C670
C671
C672
C673
C674
C675
C676
C677
C678
C679
C680
C681
C682
C683
C684
C685
C686
C687
C688
C689
C690
C691
C692
C693
C694
C695
C696
C697
C698
C699
C700
C701
C702
C703
C704
C705
C706
C707
C708
C709
C710
C711
C712
C713
C714
C715
C716
C717
C718
C719
C720
C721
C722
C723
C724
C725
C726
C727
C728
C729
C730
C731
C732
C733
C734
C735
C736
C737
C738
C739
C740
C741
C742
C743
C744
C745
C746
C747
C748
C749
C750
C751
C752
C753
C754
C755
C756
C757
C758
C759
C760
C761
C762
C763
C764
C765
C766
C767
C768
C769
C770
C771
C772
C773
C774
C775
C776
C777
C778
C779
C780
C781
C782
C783
C784
C785
C786
C787
C788
C789
C790
C791
C792
C793
C794
C795
C796
C797
C798
C799
C800
C801
C802
C803
C804
C805
C806
C807
C808
C809
C810
C811
C812
C813
C814
C815
C816
C817
C818
C819
C820
C821
C822
C823
C824
C825
C826
C827
C828
C829
C830
C831
C832
C833
C834
C835
C836
C837
C838
C839
C840
C841
C842
C843
C844
C845
C846
C847
C848
C849
C850
C851
C852
C853
C854
C855
C856
C857
C858
C859
C860
C861
C862
C863
C864
C865
C866
C867
C868
C869
C870
C871
C872
C873
C874
C875
C876
C877
C878
C879
C880
C881
C882
C883
C884
C885
C886
C887
C888
C889
C890
C891
C892
C893
C894
C895
C896
C897
C898
C899
C900
C901
C902
C903
C904
C905
C906
C907
C908
C909
C910
C911
C912
C913
C914
C915
C916
C917
C918
C919
C920
C921
C922
C923
C924
C925
C926
C927
C928
C929
C930
C931
C932
C933
C934
C935
C936
C937
C938
C939
C940
C941
C942
C943
C944
C945
C946
C947
C948
C949
C950
C951
C952
C953
C954
C955
C956
C957
C958
C959
C960
C961
C962
C963
C964
C965
C966
C967
C968
C969
C970
C971
C972
C973
C974
C975
C976
C977
C978
C979
C980
C981
C982
C983
C984
C985
C986
C987
C988
C989
C990
C991
C992
C993
C994
C995
C996
C997
C998
C999
C1000
C1001
C1002
C1003
C1004
C1005
C1006
C1007
C1008
C1009
C1010
C1011
C1012
C1013
C1014
C1015
C1016
C1017
C1018
C1019
C1020
C1021
C1022
C1023
C1024
C1025
C1026
C1027
C1028
C1029
C1030
C1031
C1032
C1033
C1034
C1035
C1036
C1037
C1038
C1039
C1040
C1041
C1042
C1043
C1044
C1045
C1046
C1047
C1048
C1049
C1050
C1051
C1052
C1053
C1054
C1055
C1056
C1057
C1058
C1059
C1060
C1061
C1062
C1063
C1064
C1065
C1066
C1067
C1068
C1069
C1070
C1071
C1072
C1073
C1074
C1075
C1076
C1077
C1078
C1079
C1080
C1081
C1082
C1083
C1084
C1085
C1086
C1087
C1088
C1089
C1090
C1091
C1092
C1093
C1094
C1095
C1096
C1097
C1098
C1099
C1100
C1101
C1102
C1103
C1104
C1105
C1106
C1107
C1108
C1109
C1110
C1111
C1112
C1113
C1114
C1115
C1116
C1117
C1118
C1119
C1120
C1121
C1122
C1123
C1124
C1125
C1126
C1127
C1128
C1129
C1130
C1131
C1132
C1133
C1134
C1135
C1136
C1137
C1138
C1139
C1140
C1141
C1142
C1143
C1144
C1145
C1146
C1147
C1148
C1149
C1150
C1151
C1152
C1153
C1154
C1155
C1156
C1157
C1158
C1159
C1160
C1161
C1162
C1163
C1164
C1165
C1166
C1167
C1168
C1169
C1170
C1171
C1172
C1173
C1174
C1175
C1176
C1177
C1178
C1179
C1180
C1181
C1182
C1183
C1184
C1185
C1186
C1187
C1188
C1189
C1190
C1191
C1192
C1193
C1194
C1195
C1196
C1197
C1198
C1199
C1200
C1201
C1202
C1203
C1204
C1205
C1206
C1207
C1208
C1209
C1210
C1211
C1212
C1213
C1214
C1215
C1216
C1217
C1218
C1219
C1220
C1221
C1222
C1223
C1224
C1225
C1226
C1227
C1228
C1229
C1230
C1231
C1232
C1233
C1234
C1235
C1236
C1237
C1238
C1239
C1240
C1241
C1242
C1243
C1244
C1245
C1246
C1247
C1248
C1249
C1250
C1251
C1252
C1253
C1254
C1255
C1256
C1257
C1258
C1259
C1260
C1261
C1262
C1263
C1264
C1265
C1266
C1267
C1268
C1269
C1270
C1271
C1272
C1273
C1274
C1275
C1276
C1277
C1278
C1279
C1280
C1281
C1282
C1283
C1284
C1285
C1286
C1287
C1288
C1289
C1290
C1291
C1292
C1293
C1294
C1295
C1296
C1297
C1298
C1299
C1300
C1301
C1302
C1303
C1304
C1305
C1306
C1307
C1308
C1309
C1310
C1311
C1312
C1313
C1314
C1315
C1316
C1317
C1318
C1319
C1320
C1321
C1322
C1323
C1324
C1325
C1326
C1327
C1328
C1329
C1330
C1331
C1332
C1333
C1334
C1335
C1336
C1337
C1338
C1339
C1340
C1341
C1342
C1343
C1344
C1345
C1346
C1347
C1348
C1349
C1350
C1371
C1373
C1374
C1375
C1376
C1378
C1379
C1380
C1381
C1383
C1384
C1385
C1386
C1387
C1388
C1389
C1390
C1391
C1393
C1394
C1395
C1397
C1398
C1399
C1400
C1401
C1402
C1403
C1404
C1405
C1406
C1407
C1408
C1409
C1410
C1411
C1412
C1413
C1414
C1415
C1416
C1417
C1418
C1419
C1420
C1421
C1422
C1423
C1424
C1425
C1426
C1427
C1428
C1429
C1430
C1431
C1432
C1433
C1434
C1435
C1436
C1437
C1438
C1439
C1440
C1441
C1442
C1443
C1444
C1445
C1446
C1447
C1448
C1449
C1450
C1451
C1452
C1453
C1454
C1455
C1456
C1457
C1458
C1459
C1460
C1461
C1462
C1463
C1464
C1465
C1466
C1467
C1468
C1469
C1470
C1471
C1472
C1473
C1474
C1475
C1476
C1477
C1478
C1479
C1480
C1481
C1482
C1483
C1484
C1485
C1486
C1487
C1488
C1489
C1490
C1491
C1492
C1493
C1494
C1495
C1496
C1497
C1498
C1499
C1500
C1501
C1502
C1503
C1504
C1505
C1506
C1507
C1508
C1509
C1510
C1511
C1512
C1513
C1514
C1515
C1516
C1517
C1518
C1519
C1520
C1521
C1522
C1523
C1524
C1525
C1526
C1527
C1528
C1529
C1530
C1531
C1532
C1533
C1534
C1535
C1536
C1537
C1538
C1539
C1540
C1541
C1542
C1543
C1544
C1545
C1546
C1547
C1548
C1549
C1550
C1551
C1552
C1553
C1554
C1555
C1556
C1557
C1558
C1559
C1560
C1561
C1562
C1563
C1564
C1565
C1566
C1567
C1568
C1569
C1570
C1571
C1572
C1573
C1574
C1575
C1576
C1577
C1578
C1579
C1580
C1581
C1582
C1583
C1584
C1585
C1586
C1587
C1588
C1589
C1590
C1591
C1592
C1593
C1594
C1595
C1596
C1597
C1598
C1599
C1600
C1601
C1602
C1603
C1604
C1605
C1606
C1607
C1608
C1609
C1610
C1611
C1612
C1613
C1614
C1615
C1616
C1617
C1618
C1619
C1620
C1621
C1622
C1623
C1624
C1625
C1626
C1627
C1628
C1629
C1630
C1631
C1632
C1633
C1634
C1635
C1636
C1637
C1638
C1639
C1640
C1641
C1642
C1643
C1644
C1645
C1646
C1647
C1648
C1649
C1650
C1651
C1652
C1653
C1654
C1655
C1656
C1657
C1658
C1659
C1660
C1661
C1662
C1663
C1664
C1665
C1666
C1667
C1668
C1669
C1670
C1671
C1672
C1673
C1674
C1675
C1676
C1677
C1678
C1679
C1680
C1681
C1682
C1683
C1684
C1685
C1686
C1687
C1688
C1689
C1690
C1691
C1692
C1693
C1694
C1695
C1696
C1697
C1698
C1699
C1700
C1701
C1702
C1703
C1704
C1705
C1706
C1707
C1708
C1709
C1710
C1711
C1712
C1713
C1714
C1715
C1716
C1717
C1718
C1719
C1720
C1721
C1722
C1723
C1724
C1725
C1726
C1727
C1728
C1729
C1730
C1731
C1732
C1733
C1734
C1735
C1736
C1737
C1738
C1739
C1740
C1741
C1742
C1743
C1744
C1745
C1746
C1747
C1748
C1749
C1750
C1751
C1752
C1753
C1754
C1755
C1756
C1757
C1758
C1759
C1760
C1761
C1762
C1763
C1764
C1765
C1766
C1767
C1768
C1769
C1770
C1771
C1772
C1773
C1774
C1775
C1776
C1777
C1778
C1779
C1780
C1781
C1782
C1783
C1784
C1785
C1786
C1787
C1788
C1789
C1790
C1791
C1792
C1793
C1794
C1795
C1796
C1797
C1798
C1799
C1800
C1801
C1802
C1803
C1804
C1805
C1806
C1807
C1808
C1809
C1810
C1811
C1812
C1813
C1814
C1815
C1816
C1817
C1818
C1819
C1820
C1821
C1822
C1823
C1824
C1825
C1826
C1827
C1828
C1829
C1830
C1831
C1832
C1833
C1834
C1835
C1836
C1837
C1838
C1839
C1840
C1841
C1842
C1843
C1844
C1845
C1846
C1847
C1848
C1849
C1850
C1851
C1852
C1853
C1854
C1855
C1856
C1857
C1858
C1859
C1860
C1861
C1862
C1863
C1864
C1865
C1866
C1867
C1868
C1869
C1870
C1871
C1872
C1873
C1874
C1875
C1876
C1877
C1878
C1879
C1880
C1881
C1882
C1883
C1884
C1885
C1886
C1887
C1888
C1889
C1890
C1891
C1892
C1893
C1894
C1895
C1896
C1897
C1898
C1899
C1900
C1901
C1902
C1903
C1904
C1905
C1906
C1907
C1908
C1909
C1910
C1911
C1912
C1913
C1914
C1915
C1916
C1917
C1918
C1919
C1920
C1921
C1922
C1923
C1924
C1925
C1926
C1927
C1928
C1929
C1930
C1931
C1932
C1933
C1934
C1935
C1936
C1937
C1938
C1939
C1940
C1941
C1942
C1943
C1944
C1945
C1946
C1947
C1948
C1949
C1950
C1951
C1952
C1953
C1954
C1955
C1956
C1957
C1958
C1959
C1960
C1961
C1962
C1963
C1964
C1965
C1966
C1967
C1968
C1969
C1970
C1971
C1972
C1973
C1974
C1975
C1976
C1977
C1978
C1979
C1980
C1981
C1982
C1983
C1984
C1985
C1986
C1987
C1988
C1989
C1990
C1991
C1992
C1993
C1994
C1995
C1996
C1997
C1998
C1999
C2000
C2001
C2002
C2003
C2004
C2005
C2006
C2007
C2008
C2009
C2010
C2011
C2012
C2013
C2014
C2015
C2016
C2017
C2018
C2019
C2020
C2021
C2022
C2023
C2024
C2025
C2026
C2027
C2028
C2029
C2030
C2031
C2032
C2033
C2034
C2035
C2036
C2037
C2038
C2039
C2040
C2041
C2042
C2043
C2044
C2045
C2046
C2047
C2048
C2049
C2050
C2051
C2052
C2053
C2054
C2055
C2056
C2057
C2058
C2059
C2060
C2061
C2062
C2063
C2064
C2065
C2066
C2067
C2068
C2069
C2070
C2071
C2072
C2073
C2074
C2075
C2076
C2077
C2078
C2079
C2080
C2081
C2082
C2083
C2084
C2085
C2086
C2087
C2088
C2089
C2090
C2091
C2092
C2093
C2094
C2095
C2096
C2097
C2098
C2099
C2100
C2101
C2102
C2103
C2104
C2105
C2106
C2107
C2108
C2109
C2110
C2111
C2112
C2113
C2114
C2115
C2116
C2117
C2118
C2119
C2120
C2121
C2122
C2123
C2124
C2125
C2126
C2127
C2128
C2129
C2130
C2131
C2132
C2133
C2134
C2135
C2136
C2137
C2138
C2139
C2140
C2141
C2142
C2143
C2144
C2145
C2146
C2147
C2148
C2149
C2150
C2151
C2152
C2153
C2154
C2155
C2156
C2157
C2158
C2159
C2160
C2161
C2162
C2163
C2164
C2165
C2166
C2167
C2168
C2169
C2170
C2171
C2172
C2173
C2174
C2175
C2176
C2177
C2178
C2179
C2180
C2181
C2182
C2183
C2184
C2185
C2186
C2187
C2188
C2189
C2190
C2191
C2192
C2193
C2194
C2195
C2196
C2197
C2198
C2199
C2200
C2201
C2202
C2203
C2204
C2205
C2206
C2207
C2208
C2209
C2210
C2211
C2212
C2213
C2214
C2215
C2216
C2217
C2218
C2219
C2220
C2221
C2222
C2223
C2224
C2225
C2226
C2227
C2228
C2229
C2230
C2231
C2232
C2233
C2234
C2235
C2236
C2237
C2238
C2239
C2240
C2241
C2242
C2243
C2244
C2245
C2246
C2247
C2248
C2249
C2250
C2251
C2252
C2253
C2254
C2255
C2256
C2257
C2258
C2259
C2260
C2261
C2262
C2263
C2264
C2265
C2266
C2267
C2268
C2269
C2270
C2271
C2272
C2273
C2274
C2275
C2276
C2277
C2278
C2279
C2280
C2281
C2282
C2283
C2284
C2285
C2286
C2287
C2288
C2289
C2290
C2291
C2292
C2293
C2294
C2295
C2296
C2297
C2298
C2299
C2300
C2301
C2302
C2303
C2304
C2305
C2306
C2307
C2308
C2309
C2310
C2311
C2312
C2313
C2314
C2315
C2316
C2317
C2318
C2319
C2320
C2321
C2322
C2323
C2324
C2325
C2326
C2327
C2328
C2329
C2330
C2331
C2332
C2333
C2334
C2335
C2336
C2337
C2338
C2339
C2340
C2341
C2342
C2343
C2344
C2345
C2346
C2347
C2348
C2349
C2350
C2371
C2373
C2374
C2375
C2376
C2378
C2379
C2380
C2381
C2383
C2384
C2385
C2386
C2387
C2388
C2389
C2390
C2391
C2393
C2394
C2395
C2397
C2398
C2399
C2400
C2401
C2402
C2403
C2404
C2405
C2406
C2407
C2408
C2409
C2410
C2411
C2412
C2413
C2414
C2415
C2416
C2417
C2418
C2419
C2420
C2421
C2422
C2423
C2424
C2425
C2426
C2427
C2428
C2429
C2430
C2431
C2432
C2433
C2434
C2435
C2436
C2437
C2438
C2439
C2440
C2441
C2442
C2443
C2444
C2445
C2446
C2447
C2448
C2449
C2450
C2451
C2452
C2453
C2454
C2455
C2456
C2457
C2458
C2459
C2460
C2461
C2462
C2463
C2464
C2465
C2466
C2467
C2468
C2469
C2470
C2471
C2472
C2473
C2474
C2475
C2476
C2477
C2478
C2479
C2480
C2481
C2482
C2483
C2484
C2485
C2486
C2487
C2488
C2489
C2490
C2491
C2492
C2493
C2494
C2495
C2496
C2497
C2498
C2499
C2500
C2501
C2502
C2503
C2504
C2505
C2506
C2507
C2508
C2509
C2510
C2511
C2512
C2513
C2514
C2515
C2516
C2517
C2518
C2519
C2520
C2521
C2522
C2523
C2524
C2525
C2526
C2527
C2528
C2529
C2530
C2531
C2532
C2533
C2534
C2535
C2536
C2537
C2538
C2539
C2540
C2541
C2542
C2543
C2544
C2545
C2546
C2547
C2548
C2549
C2550
C2551
C2552
C2553
C2554
C2555
C2556
C2557
C2558
C2559
C2560
C2561
C2562
C2563
C2564
C2565
C2566
C2567
C2568
C2569
C2570
C2571
C2572
C2573
C2574
C2575
C2576
C2577
C2578
C2579
C2580
C2581
C2582
C2583
C2584
C2585
C2586
C2587
C2588
C2589
C2590
C2591
C2592
C2593
C2594
C2595
C2596
C2597
C2598
C2599
C2600
C2601
C2602
C2603
C2604
C2605
C2606
C2607
C2608
C2609
C2610
C2611
C2612
C2613
C2614
C2615
C2616
C2617
C2618
C2619
C2620
C2621
C2622
C2623
C2624
C2625
C2626
C2627
C2628
C2629
C2630
C2631
C2632
C2633
C2634
C2635
C2636
C2637
C2638
C2639
C2640
C2641
C2642
C2643
C2644
C2645
C2646
C2647
C2648
C2649
C2650
C2651
C2652
C2653
C2654
C2655
C2656
C2657
C2658
C2659
C2660
C2661
C2662
C2663
C2664
C2665
C2666
C2667
C2668
C2669
C2670
C2671
C2672
C2673
C2674
C2675
C2676
C2677
C2678
C2679
C2680
C2681
C2682
C2683
C2684
C2685
C2686
C2687
C2688
C2689
C2690
C2691
C2692
C2693
C2694
C2695
C2696
C2697
C2698
C2699
C2700
C2701
C2702
C2703
C2704
C2705
C2706
C2707
C2708
C2709
C2710
C2711
C2712
C2713
C2714
C2715
C2716
C2717
C2718
C2719
C2720
C2721
C2722
C2723
C2724
C2725
C2726
C2727
C2728
C2729
C2730
C2731
C2732
C2733
C2734
C2735
C2736
C2737
C2738
C2739
C2740
C2741
C2742
C2743
C2744
C2745
C2746
C2747
C2748
C2749
C2750
C2751
C2752
C2753
C2754
C2755
C2756
C2757
C2758
C2759
C2760
C2761
C2762
C2763
C2764
C2765
C2766
C2767
C2768
C2769
C2770
C2771
C2772
C2773
C2774
C2775
C2776
C2777
C2778
C2779
C2780
C2781
C2782
C2783
C2784
C2785
C2786
C2787
C2788
C2789
C2790
C2791
C2792
C2793
C2794
C2795
C2796
C2797
C2798
C2799
C2800
C2801
C2802
C2803
C2804
C2805
C2806
C2807
C2808
C2809
C2810
C2811
C2812
C2813
C2814
C2815
C2816
C2817
C2818
C2819
C2820
C2821
C2822
C2823
C2824
C2825
C2826
C2827
C2828
C2829
C2830
C2831
C2832
C2833
C2834
C2835
C2836
C2837
C2838
C2839
C2840
C2841
C2842
C2843
C2844
C2845
C2846
C2847
C2848
C2849
C2850
C2851
C2852
C2853
C2854
C2855
C2856
C2857
C2858
C2859
C2860
C2861
C2862
C2863
C2864
C2865
C2866
C2867
C2868
C2869
C2870
C2871
C2872
C2873
C2874
C2875
C2876
C2877
C2878
C2879
C2880
C2881
C2882
C2883
C2884
C2885
C2886
C2887
C2888
C2889
C2890
C2891
C2892
C2893
C2894
C2895
C2896
C2897
C2898
C2899
C2900
C2901
C2902
C2903
C2904
C2905
C2906
C2907
C2908
C2909
C2910
C2911
C2912
C2913
C2914
C2915
C2916
C2917
C2918
C2919
C2920
C2921
C2922
C2923
C2924
C2925
C2926
C2927
C2928
C2929
C2930
C2931
C2932
C2933
C2934
C2935
C2936
C2937
C2938
C2939
C2940
C2941
C2942
C2943
C2944
C2945
C2946
C2947
C2948
C2949
C2950
C2951
C2952
C2953
C2954
C2955
C2956
C2957
C2958
C2959
C2960
C2961
C2962
C2963
C2964
C2965
C2966
C2967
C2968
C2969
C2970
C2971
C2972
C2973
C2974
C2975
C2976
C2977
C2978
C2979
C2980
C2981
C2982
C2983
C2984
C2985
C2986
C2987
C2988
C2989
C2990
C2991
C2992
C2993
C2994
C2995
C2996
C2997
C2998
C2999
C3000
C3001
C3002
C3003
C3004
C3005
C3006
C3007
C3008
C3009
C3010
C3011
C3012
C3013
C3014
C3015
C3016
C3017
C3018
C3019
C3020
C3021
C3022
C3023
C3024
C3025
C3026
C3027
C3028
C3029
C3030
C3031
C3032
C3033
C3034
C3035
C3036
C3037
C3038
C3039
C3040
C3041
C3042
C3043
C3044
C3045
C3046
C3047
C3048
C3049
C3050
C3051
C3052
C3053
C3054
C3055
C3056
C3057
C3058
C3059
C3060
C3061
C3062
C3063
C3064
C3065
C3066
C3067
C3068
C3069
C3070
C3071
C3072
C3073
C3074
C3075
C3076
C3077
C3078
C3079
C3080
C3081
C3082
C3083
C3084
C3085
C3086
C3087
C3088
C3089
C3090
C3091
C3092
C3093
C3094
C3095
C3096
C3097
C3098
C3099
C3100
C3101
C3102
C3103
C3104
C3105
C3106
C3107
C3108
C3109
C3110
C3111
C3112
C3113
C3114
C3115
C3116
C3117
C3118
C3119
C3120
C3121
C3122
C3123
C3124
C3125
C3126
C3127
C3128
C3129
C3130
C3131
C3132
C3133
C3134
C3135
C3136
C3137
C3138
C3139
C3140
C3141
C3142
C3143
C3144
C3145
C3146
C3147
C3148
C3149
C3150
C3151
C3152
C3153
C3154
C3155
C3156
C3157
C3158
C3159
C3160
C3161
C3162
C3163
C3164
C3165
C3166
C3167
C3168
C3169
C3170
C3171
C3172
C3173
C3174
C3175
C3176
C3177
C3178
C3179
C3180
C3181
C3182
C3183
C3184
C3185
C3186
C3187
C3188
C3189
C3190
C3191
C3192
C3193
C3194
C3195
C3196
C3197
C3198
C3199
C3200
C3201
C3202
C3203
C3204
C3205
C3206
C3207
C3208
C3209
C3210
C3211
C3212
C3213
C3214
C3215
C3216
C3217
C3218
C3219
C3220
C3221
C3222
C3223
C3224
C3225
C3226
C3227
C3228
C3229
C3230
C3231
C3232
C3233
C3234
C3235
C3236
C3237
C3238
C3239
C3240
C3241
C3242
C3243
C3244
C3245
C3246
C3247
C3248
C3249
C3250
C3251
C3252
C3253
C3254
C3255
C3256
C3257
C3258
C3259
C3260
C3261
C3262
C3263
C3264
C3265
C3266
C3267
C3268
C3269
C3270
C3271
C3272
C3273
C3274
C3275
C3276
C3277
C3278
C3279
C3280
C3281
C3282
C3283
C3284
C3285
C3286
C3287
C3288
C3289
C3290
C3291
C3292
C3293
C3294
C3295
C3296
C3297
C3298
C3299
C3300
C3301
C3302
C3303
C3304
C3305
C3306
C3307
C3308
C3309
C3310
C3311
C3312
C3313
C3314
C3315
C3316
C3317
C3318
C3319
C3320
C3321
C3322
C3323
C3324
C3325
C3326
C3327
C3328
C3329
C3330
C3331
C3332
C3333
C3334
C3335
C3336
C3337
C3338
C3339
C3340
C3341
C3342
C3343
C3344
C3345
C3346
C3347
C3348
C3349
C3350
C3371
C3373
C3374
C3375
C3376
C3378
C3379
C3380
C3381
C3383
C3384
C3385
C3386
C3387
C3388
C3389
C3390
C3391
C3393
C3394
C3395
C3397
C3398
C3399
C3400
C3401
C3402
C3403
C3404
C3405
C3406
C3407
C3408
C3409
C3410
C3411
C3412
C3413
C3414
C3415
C3416
C3417
C3418
C3419
C3420
C3421
C3422
C3423
C3424
C3425
C3426
C3427
C3428
C3429
C3430
C3431
C3432
C3433
C3434
C3435
C3436
C3437
C3438
C3439
C3440
C3441
C3442
C3443
C3444
C3445
C3446
C3447
C3448
C3449
C3450
C3451
C3452
C3453
C3454
C3455
C3456
C3457
C3458
C3459
C3460
C3461
C3462
C3463
C3464
C3465
C3466
C3467
C3468
C3469
C3470
C3471
C3472
C3473
C3474
C3475
C3476
C3477
C3478
C3479
C3480
C3481
C3482
C3483
C3484
C3485
C3486
C3487
C3488
C3489
C3490
C3491
C3492
C3493
C3494
C3495
C3496
C3497
C3498
C3499
C3500
C3501
C3502
C3503
C3504
C3505
C3506
C3507
C3508
C3509
C3510
C3511
C3512
C3513
C3514
C3515
C3516
C3517
C3518
C3519
C3520
C3521
C3522
C3523
C3524
C3525
C3526
C3527
C3528
C3529
C3530
C3531
C3532
C3533
C3534
C3535
C3536
C3537
C3538
C3539
C3540
C3541
C3542
C3543
C3544
C3545
C3546
C3547
C3548
C3549
C3550
C3551
C3552
C3553
C3554
C3555
C3556
C3557
C3558
C3559
C3560
C3561
C3562
C3563
C3564
C3565
C3566
C3567
C3568
C3569
C3570
C3571
C3572
C3573
C3574
C3575
C3576
C3577
C3578
C3579
C3580
C3581
C3582
C3583
C3584
C3585
C3586
C3587
C3588
C3589
C3590
C3591
C3592
C3593
C3594
C3595
C3596
C3597
C3598
C3599
C3600
C3601
C3602
C3603
C3604
C3605
C3606
C3607
C3608
C3609
C3610
C3611
C3612
C3613
C3614
C3615
C3616
C3617
C3618
C3619
C3620
C3621
C3622
C3623
C3624
C3625
C3626
C3627
C3628
C3629
C3630
C3631
C3632
C3633
C3634
C3635
C3636
C3637
C3638
C3639
C3640
C3641
C3642
C3643
C3644
C3645
C3646
C3647
C3648
C3649
C3650
C3651
C3652
C3653
C3654
C3655
C3656
C3657
C3658
C3659
C3660
C3661
C3662
C3663
C3664
C3665
C3666
C3667
C3668
C3669
C3670
C3671
C3672
C3673
C3674
C3675
C3676
C3677
C3678
C3679
C3680
C3681
C3682
C3683
C3684
C3685
C3686
C3687
C3688
C3689
C3690
C3691
C3692
C3693
C3694
C3695
C3696
C3697
C3698
C3699
C3700
C3701
C3702
C3703
C3704
C3705
C3706
C3707
C3708
C3709
C3710
C3711
C3712
C3713
C3714
C3715
C3716
C3717
C3718
C3719
C3720
C3721
C3722
C3723
C3724
C3725
C3726
C3727
C3728
C3729
C3730
C3731
C3732
C3733
C3734
C3735
C3736
C3737
C3738
C3739
C3740
C3741
C3742
C3743
C3744
C3745
C3746
C3747
C3748
C3749
C3750
C3751
C3752
C3753
C3754
C3755
C3756
C3757
C3758
C3759
C3760
C3761
C3762
C3763
C3764
C3765
C3766
C3767
C3768
C3769
C3770
C3771
C3772
C3773
C3774
C3775
C3776
C3777
C3778
C3779
C3780
C3781
C3782
C3783
C3784
C3785
C3786
C3787
C3788
C3789
C3790
C3791
C3792
C3793
C3794
C3795
C3796
C3797
C3798
C3799
C3800
C3801
C3802
C3803
C3804
C3805
C3806
C3807
C3808
C3809
C3810
C3811
C3812
C3813
C3814
C3815
C3816
C3817
C3818
C3819
C3820
C3821
C3822
C3823
C3824
C3825
C3826
C3827
C3828
C3829
C3830
C3831
C3832
C3833
C3834
C3835
C3836
C3837
C3838
C3839
C3840
C3841
C3842
C3843
C3844
C3845
C3846
C3847
C3848
C3849
C3850
C3851
C3852
C3853
C3854
C3855
C3856
C3857
C3858
C3859
C3860
C3861
C3862
C3863
C3864
C3865
C3866
C3867
C3868
C3869
C3870
C3871
C3872
C3873
C3874
C3875
C3876
C3877
C3878
C3879
C3880
C3881
C3882
C3883
C3884
C3885
C3886
C3887
C3888
C3889
C3890
C3891
C3892
C3893
C3894
C3895
C3896
C3897
C3898
C3899
C3900
C3901
C3902
C3903
C3904
C3905
C3906
C3907
C3908
C3909
C3910
C3911
C3912
C3913
C3914
C3915
C3916
C3917
C3918
C3919
C3920
C3921
C3922
C3923
C3924
C3925
C3926
C3927
C3928
C3929
C3930
C3931
C3932
C3933
C3934
C3935
C3936
C3937
C3938
C3939
C3940
C3941
C3942
C3943
C3944
C3945
C3946
C3947
C3948
C3949
C3950
C3951
C3952
C3953
C3954
C3955
C3956
C3957
C3958
C3959
C3960
C3961
C3962
C3963
C3964
C3965
C3966
C3967
C3968
C3969
C3970
C3971
C3972
C3973
C3974
C3975
C3976
C3977
C3978
C3979
C3980
C3981
C3982
C3983
C3984
C3985
C3986
C3987
C3988
C3989
C3990
C3991
C3992
C3993
C3994
C3995
C3996
C3997
C3998
C3999
C4000
C4001
C4002
C4003
C4004
C4005
C4006
C4007
C4008
C4009
C4010
C4011
C4012
C4013
C4014
C4015
C4016
C4017
C4018
C4019
C4020
C4021
C4022
C4023
C4024
C4025
C4026
C4027
C4028
C4029
C4030
C4031
C4032
C4033
C4034
C4035
C4036
C4037
C4038
C4039
C4040
C4041
C4042
C4043
C4044
C4045
C4046
C4047
C4048
C4049
C4050
C4051
C4052
C4053
C4054
C4055
C4056
C4057
C4058
C4059
C4060
C4061
C4062
C4063
C4064
C4065
C4066
C4067
C4068
C4069
C4070
C4071
C4072
C4073
C4074
C4075
C4076
C4077
C4078
C4079
C4080
C4081
C4082
C4083
C4084
C4085
C4086
C4087
C4088
C4089
C4090
C4091
C4092
C4093
C4094
C4095
C4096
C4097
C4098
C4099
C4100
C4101
C4102
C4103
C4104
C4105
C4106
C4107
C4108
C4109
C4110
C4111
C4112
C4113
C4114
C4115
C4116
C4117
C4118
C4119
C4120
C4121
C4122
C4123
C4124
C4125
C4126
C4127
C4128
C4129
C4130
C4131
C4132
C4133
C4134
C4135
C4136
C4137
C4138
C4139
C4140
C4141
C4142
C4143
C4144
C4145
C4146
C4147
C4148
C4149
C4150
C4151
C4152
C4153
C4154
C4155
C4156
C4157
C4158
C4159
C4160
C4161
C4162
C4163
C4164
C4165
C4166
C4167
C4168
C4169
C4170
C4171
C4172
C4173
C4174
C4175
C4176
C4177
C4178
C4179
C4180
C4181
C4182
C4183
C4184
C4185
C4186
C4187
C4188
C4189
C4190
C4191
C4192
C4193
C4194
C4195
C4196
C4197
C4198
C4199
C4200
C4201
C4202
C4203
C4204
C4205
C4206
C4207
C4208
C4209
C4210
C4211
C4212
C4213
C4214
C4215
C4216
C4217
C4218
C4219
C4220
C4221
C4222
C4223
C4224
C4225
C4226
C4227
C4228
C4229
C4230
C4231
C4232
C4233
C4234
C4235
C4236
C4237
C4238
C4239
C4240
C4241
C4242
C4243
C4244
C4245
C4246
C4247
C4248
C4249
C4250
C4251
C4252
C4253
C4254
C4255
C4256
C4257
C4258
C4259
C4260
C4261
C4262
C4263
C4264
C4265
C4266
C4267
C4268
C4269
C4270
C4271
C4272
C4273
C4274
C4275
C4276
C4277
C4278
C4279
C4280
C4281
C4282
C4283
C4284
C4285
C4286
C4287
C4288
C4289
C4290
C4291
C4292
C4293
C4294
C4295
C4296
C4297
C4298
C4299
C4300
C4301
C4302
C4303
C4304
C4305
C4306
C4307
C4308
C4309
C4310
C4311
C4312
C4313
C4314
C4315
C4316
C4317
C4318
C4319
C4320
C4321
C4322
C4323
C4324
C4325
C4326
C4327
C4328
C4329
C4330
C4331
C4332
C4333
C4334
C4335
C4336
C4337
C4338
C4339
C4340
C4341
C4342
C4343
C4344
C4345
C4346
C4347
C4348
C4349
C4350
C4371
C4373
C4374
C4375
C4376
C4378
C4379
C4380
C4381
C4383
C4384
C4385
C4386
C4387
C4388
C4389
C4390
C4391
C4393
C4394
C4395
C4397
C4398
C4399
C4400
C4401
C4402
C4403
C4404
C4405
C4406
C4407
C4408
C4409
C4410
C4411
C4412
C4413
C4414
C4415
C4416
C4417
C4418
C4419
C4420
C4421
C4422
C4423
C4424
C4425
C4426
C4427
C4428
C4429
C4430
C4431
C4432
C4433
C4434
C4435
C4436
C4437
C4438
C4439
C4440
C4441
C4442
C4443
C4444
C4445
C4446
C4447
C4448
C4449
C4450
C4451
C4452
C4453
C4454
C4455
C4456
C4457
C4458
C4459
C4460
C4461
C4462
C4463
C4464
C4465
C4466
C4467
C4468
C4469
C4470
C4471
C4472
C4473
C4474
C4475
C4476
C4477
C4478
C4479

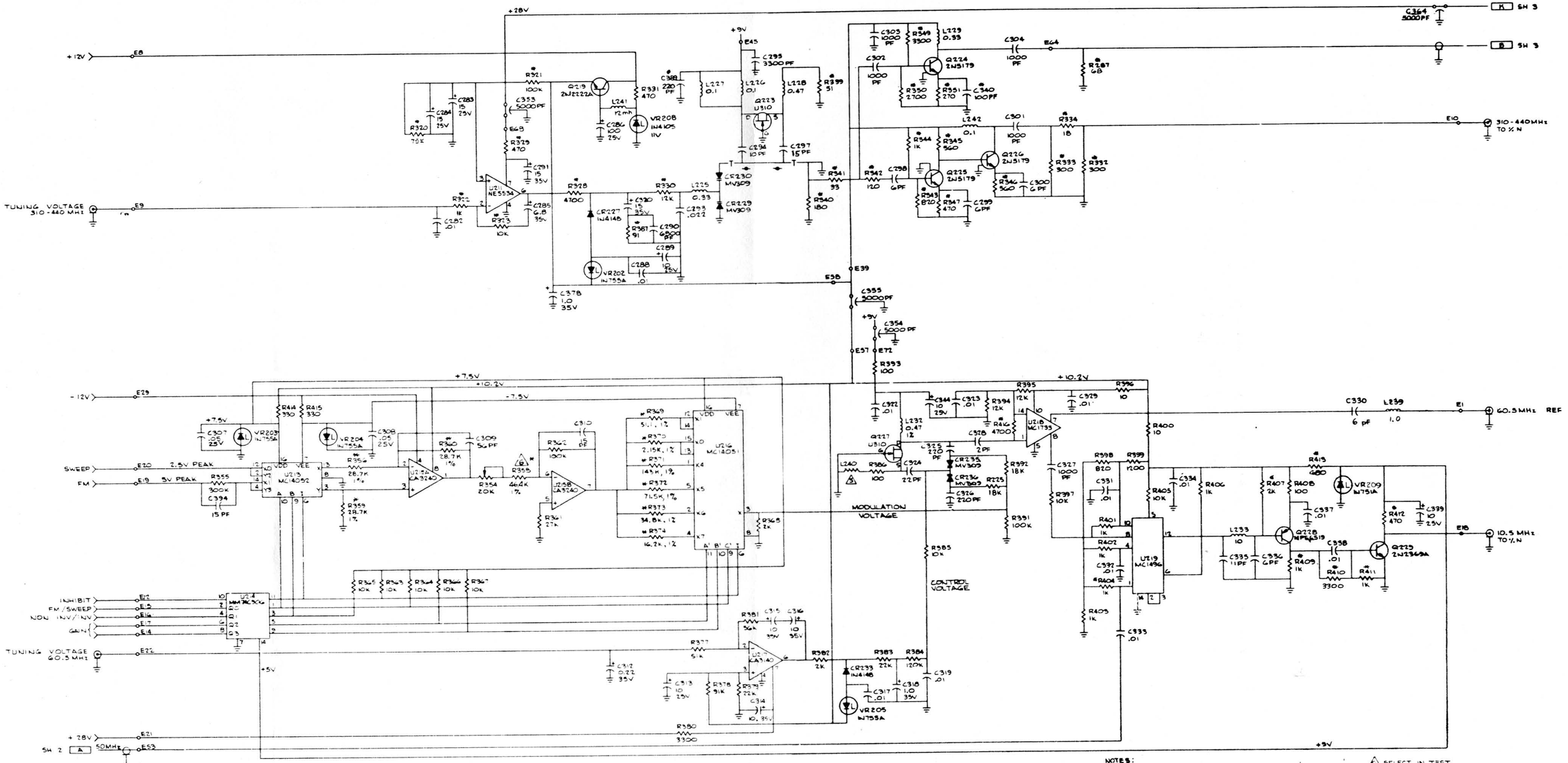

NOTES:

1. PARTIAL REFERENCE DESIGNATIONS ARE SHOWN. FOR COMPLETE DESIGNATIONS PREFIX WITH 1A5.
2. FOR REFERENCE DRAWINGS REFER TO:
   01-P00385N002 MODULE ASSY
   01-P00386A002 PWB ASSY
3. UNLESS OTHERWISE SPECIFIED:
   ALL RESISTORS ARE IN OHMS ±5 PCT, 1/4W.
   ALL CAPACITORS ARE IN UF.
   ALL INDUCTORS ARE IN UH.
   ALL VOLTAGES ARE DC.
4. ⊕ MEANS 1/8W OR CHIP CAP.
5. 2AC85961B01

⚠ SELECT IN TEST

REF DES	NOMINAL	SELECT VALUES
C388	NONE	1.5 PF
C398	NONE	5 PF, 10 PF
R358	46.4K	38.3K, 42.2K, 51.1K, 56.2K, 6[illegible]
R437	NONE	82

REF DES	DEVICE TYPE	GND	+5V	-5V	+12V	-12V	NO CONNECTION
U101	11C90DC	1,2,3,12,14	4,5				6,7,8,9,10,11,13
U102	MC1035L	8	1,16				2,3,4,5,6,7,10,11,12,13,14,15
U103	MC12040L	7	1,14				2,4,5,8,10,11,13
U104	CA3140E	4					1,5,8
U105	MC1016	8	1,16				4,15
U106	TEM-2	3					
U107	MLM324				4	11	
U108	SP8409B	6					1,2,3,5,8,9,12,13
U109	TEM-2	3					
U110	CA3240E				8	4	
U111	NE5534AN	4					1,5,8
U112	MMA100	3					
U113	MC14052	8					1,5,11,15
U114	MM74C906	7	14				12,13
U115	CA3240E					4	
U116	MC14051	8					
U117	CA3140E	4					1,5,8
U118	MC1733	5					2,3,4,6,9,11,12,13
U119	MC1496	14					7,9,11,13

Figure 11-6. RF Synthesizer A5A2
Schematic Diagram (Sheet 1 of 3)

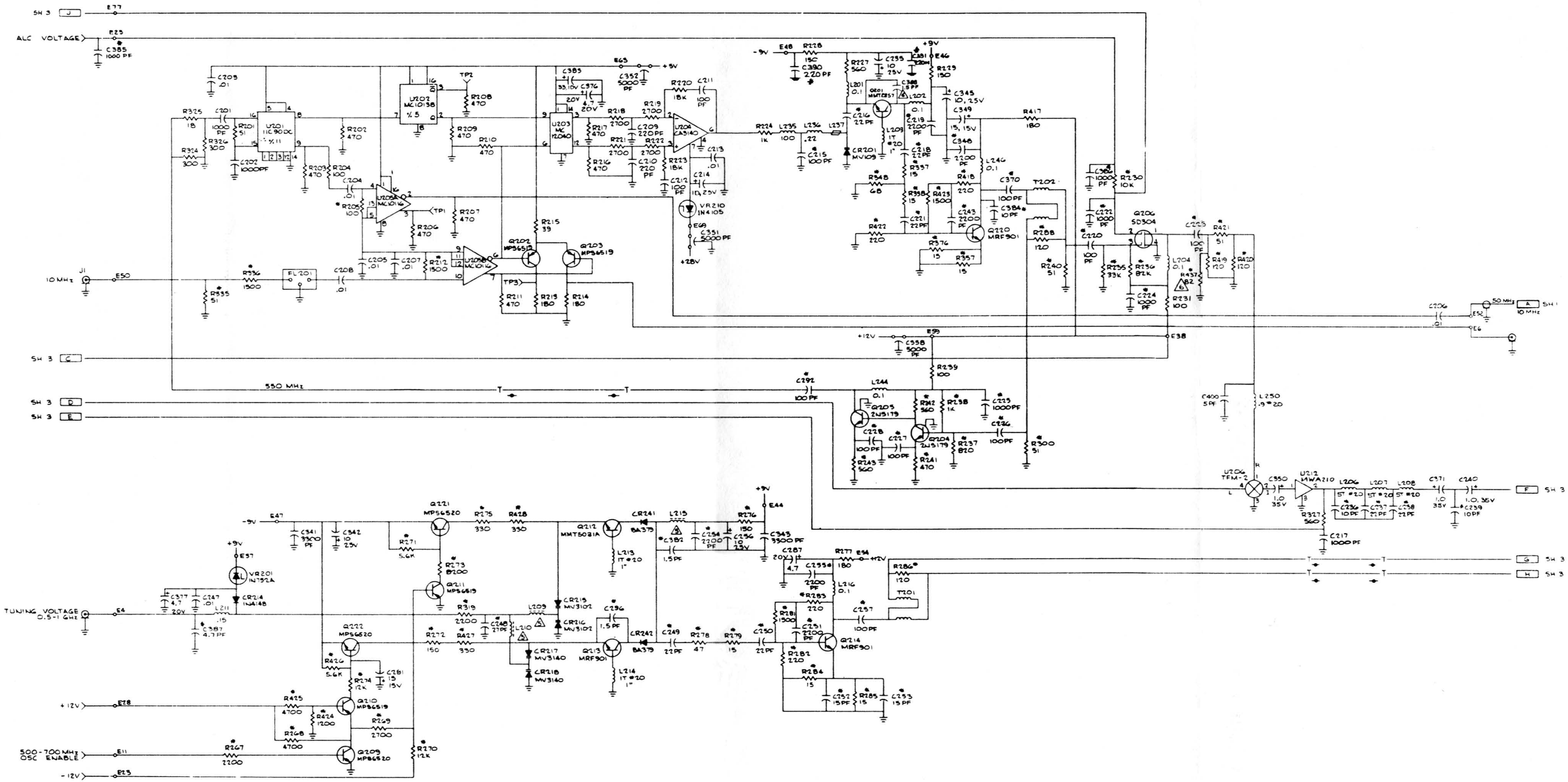

Figure 11-6. RF Synthesizer A5A2
Schematic Diagram (Sheet 2 of 3)

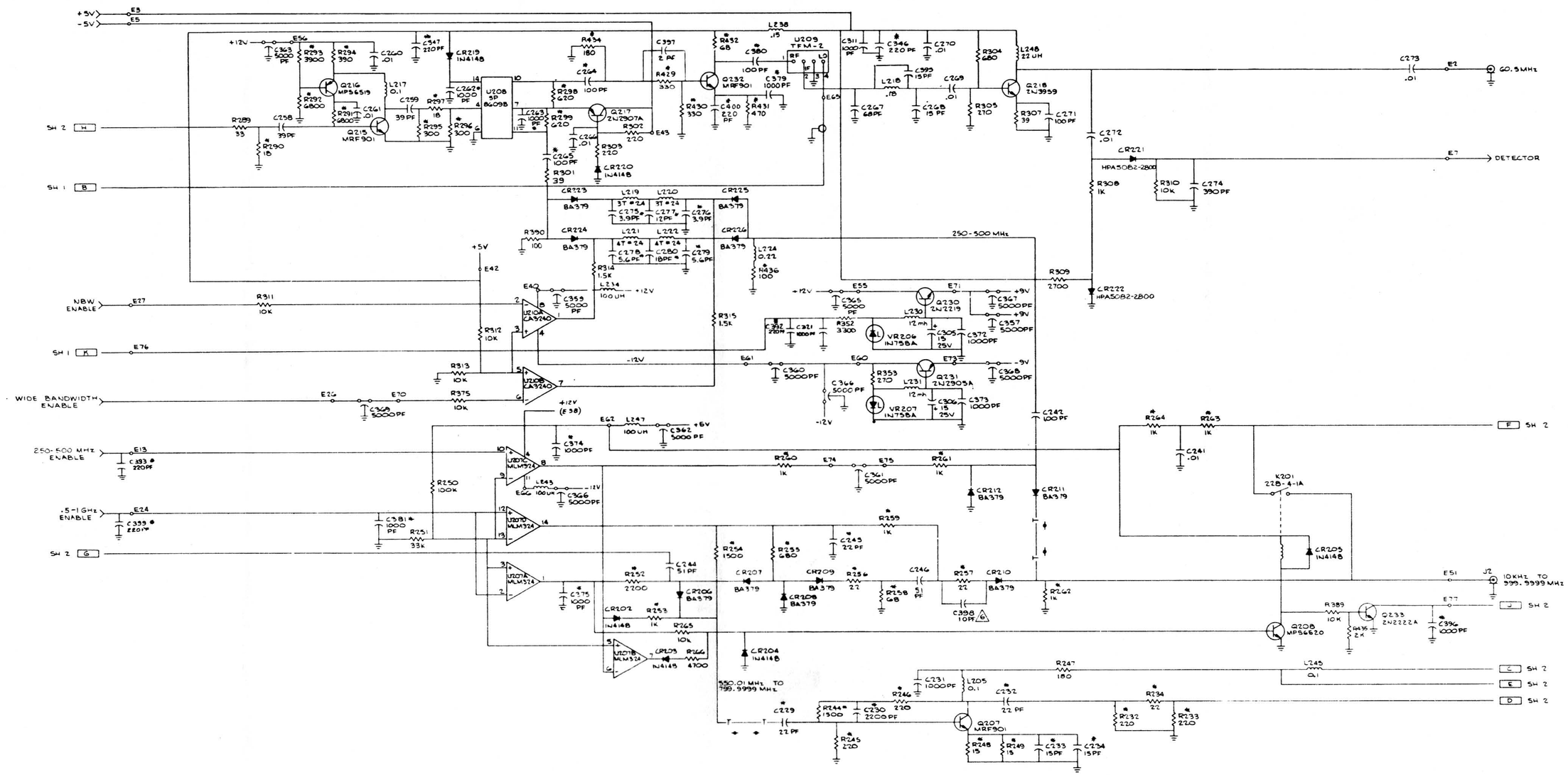

Figure 11-6. RF Synthesizer A5A2
Schematic Diagram (Sheet 3 of 3)

Part Value
CIEVER
0X.312
WHT
ACK
0X.312
.4
D.A-1/4
IITE
0X.250
IITE
IITE
0X.250
5 WHT
0PF80-20-500
0PF80-20-500
0PF80-20-500
0PF80-20-500
0PF80-20-500
0PF80-20-500
0PF80-20-500
0PF80-20-500
0PF80-20-500
0PF80-20-500
0PF80-20-500
0PF80-20-500
0PF80-20-500
0PF80-20-500
0PF80-20-500
0PF80-20-500
0-003
0-003
UH

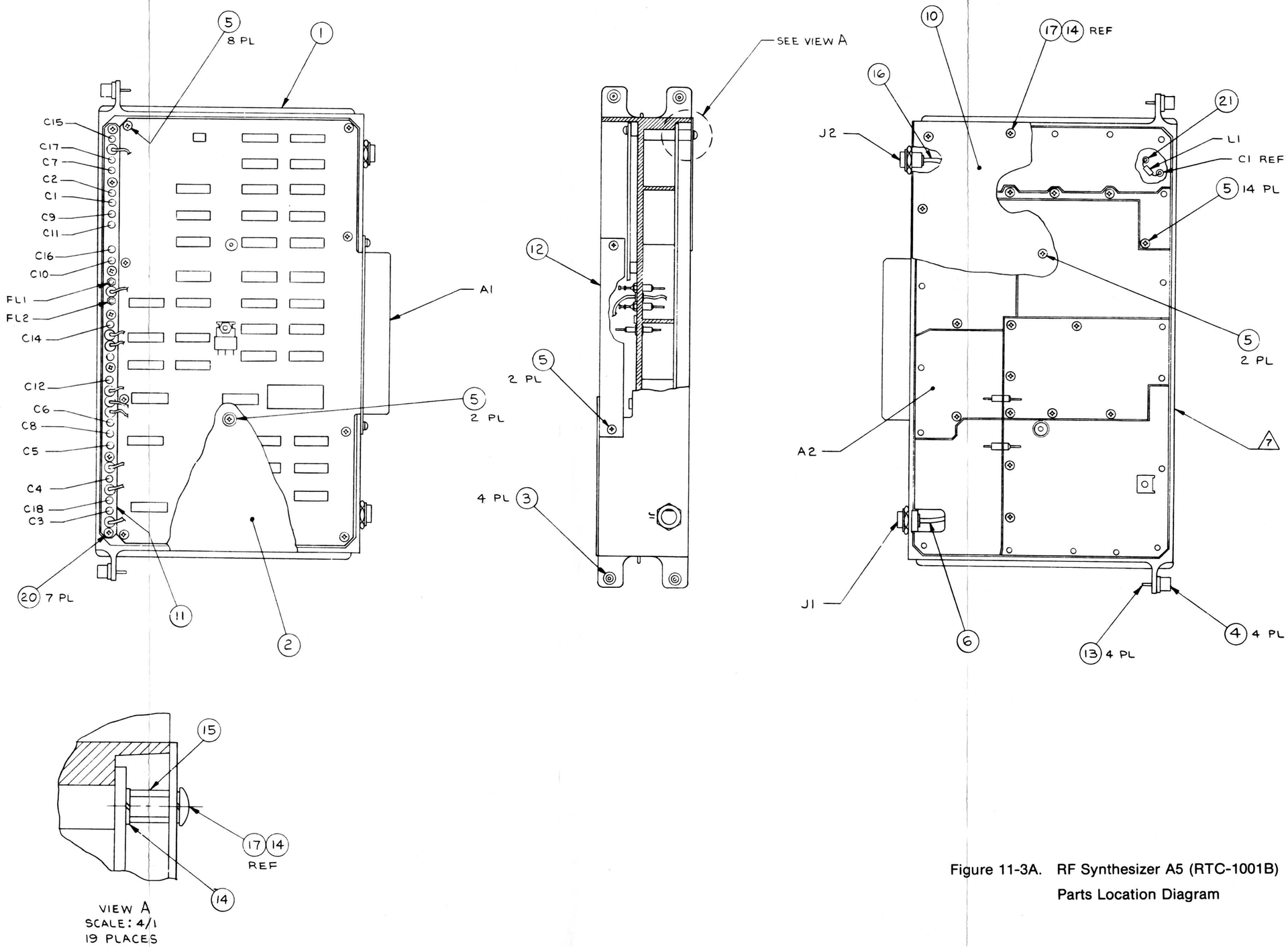

Figure 11-3A. RF Synthesizer A5 (RTC-1001B) Parts Location Diagram

Find No.	Qty. Req.	Part No.	Nomenclature	Part Value
		RTC-1001B	.SYNTHESIZER	
001	1	27-80335A34	CHASSIS, SYNTHESIZER	
002	1	15-P00465N001	COVER,DIGITAL SYNTHES	RECIEVER
003	4	5C84500B03	EYELET	
004	4	42C84284B01	RETAINER	
005	28	03-P07961V024	SCREW,MACH,SEMS PH EX	4-40X.312
006	AR		WIRE	24 WHT
008	AR	SN63WRMAP3	SOLDER	
009	AR	11-14167A01	INK	BLACK
010	1	15-80335A36	COVER,RF SYNTHESIZER	
011	1	26-P00211N001	SHIELD	
012	1	64-P00230N001	PLATE, CONNECTOR	
013	4	MS35206-214	SCREW,PH	4-40X.312
014	38	MS35338-40	WASHER,LOCK	NO.4
015	19	9724-SS-0440	SPACER,M/F 4-40	MOD.A-1/4
016	AR	30-84421F13	CABLE,RF	WHITE
017	19	MS35206-213	SCREW,PH	4-40X.250
018	AR	30-15068A34	CABLE,RF	WHITE
019	AR	30-15068A29	CABLE,RF,SGLE SHLD	WHITE
020	7	03-P07961V023	SCREW,MACH,SEMS PH EX	4-40X.250
021	1	29-14070A91	TERMINAL	
022	AR		WIRE	24
023	AR	M23053/5-104-9	INSULATION SLEEVING	.125 WHT
A 001	1	RTC-4009B	DIGITAL SYNTHESIZER	
A 002	1	RTC-4010B	RF SYNTHESIZER ASSY	
C 001	1	21C82543H03	CAPACITOR	5000PF80-20-500
C 002	1	21C82543H03	CAPACITOR	5000PF80-20-500
C 003	1	21C82543H03	CAPACITOR	5000PF80-20-500
C 004	1	21C82543H03	CAPACITOR	5000PF80-20-500
C 005	1	21C82543H03	CAPACITOR	5000PF80-20-500
C 006	1	21C82543H03	CAPACITOR	5000PF80-20-500
C 007	1	21C82543H03	CAPACITOR	5000PF80-20-500
C 008	1	21C82543H03	CAPACITOR	5000PF80-20-500
C 009	1	21C82543H03	CAPACITOR	5000PF80-20-500
C 010	1	21C82543H03	CAPACITOR	5000PF80-20-500
C 011	1	21C82543H03	CAPACITOR	5000PF80-20-500
C 012	1	21C82543H03	CAPACITOR	5000PF80-20-500
C 014	1	21C82543H03	CAPACITOR	5000PF80-20-500
C 015	1	21C82543H03	CAPACITOR	5000PF80-20-500
C 016	1	21C82543H03	CAPACITOR	5000PF80-20-500
C 017	1	21C82543H03	CAPACITOR	5000PF80-20-500
C 018	1	21C82543H03	CAPACITOR	5000PF80-20-500
FL001	1	91-80346A11	FILTER,RF	1250-003
FL002	1	91-80346A11	FILTER,RF	1250-003
J 001	1	9-80331A80	CONNECTOR,RF	
J 002	1	9-80331A79	CONNECTOR,RF	
L 001	1	24-80369A37	COIL	100UH

Figure 11-3A. RF Synthesizer A5 (RTC-1001B) Parts Location Diagram

Find No.	Qty. Req.	Part No.	Nomenclature	Part Value
		RTC-4010B	.RF SYNTHESIZER	
001	1	84-80335A21	PWB, RF SYNTHESIZER	
002	AR	SN63WRMAP3	SOLDER	
003	AR	11-14167A01	INK	BLACK
004	1	26-P00210N001	SHIELD	
005	1	26-P00210N002	SHIELD	
006	1	26-P00210N003	SHIELD	
007	1	26-P00210N004	SHIELD	
008	1	26-P00210N005	SHIELD	
009	1	26-P00210N006	SHIELD	
011	AR	1-80305A61	CABLE,SEMI-RIGID	
012	1	26-P00210N007	SHIELD,CAN	
013	1	26-P00240N001	SHIELD,CAN	
014	1	26-P00210N008	SHIELD,CAN	
015	AR	SN63WRP3	SOLDER	
016	AR	M23053/5-103-9	INSULATION SLEEVING	.093 WHT
017	AR	M23053/5-205-C	INSULATION SLEEVING	.187 CLR
018	AR		INSULATION SLEEVING	22 WHT
019	AR		INSULATION TAPE	1IN YELLOW
020	AR		WIRE	24
021	AR	RTV3145	ADHESIVE	
022	AR		WIRE,TEFLON	22 SOLID WHT
023	AR		INSULATING SLEEVING	14 WHT
024	AR	SN62WRMAP3	SOLDER	
C 201	1	21D82187B14	CAPACITOR	1000PF-10-100
C 202	1	21D82187B14	CAPACITOR	1000PF-10-100
C 203	1	21D82428B59	CAPACITOR	.01UF-2080-200
C 204	1	21D82428B59	CAPACITOR	.01UF-2080-200
C 205	1	21D82428B59	CAPACITOR	.01UF-2080-200
C 206	1	21D82428B59	CAPACITOR	.01UF-2080-200
C 207	1	21D82428B59	CAPACITOR	.01UF-2080-200
C 208	1	21D82428B59	CAPACITOR	.01UF-2080-200
C 209	1	21D82187B08	CAPACITOR	220PF-10-500
C 210	1	21D82187B08	CAPACITOR	220PF-10-500
C 211	1	21D84494B04	CAPACITOR	100PF-5-500
C 212	1	21D84494B04	CAPACITOR	100PF-5-500
C 213	1	21D82428B59	CAPACITOR	.01UF-2080-200
C 214	1	23D84665F01	CAPACITOR	10UF-25V
C 215	1	21-80370A21	CAPACITOR	100PF-20-100
C 216	1	21-80370A14	CAPACITOR	22PF-5-100
C 217	1	21D82187B14	CAPACITOR	1000PF-10-100
C 218	1	21-80370A14	APACITOR	22PF-5-100
C 219	1	21-80370A24	CAPACITOR	2200PF-20-100
C 220	1	21-80370A07	CAPACITOR	100PF-10-100 NPO
C 221	1	21-80370A14	CAPACITOR	22PF-5-100
C 222	1	21-80370A22	CAPACITOR	1000PF-20-100
C 223	1	21-80370A21	CAPACITOR	100PF-20-100
C 224	1	21-80370A22	CAPACITOR	1000PF-20-100
C 225	1	21-80370A22	CAPACITOR	1000PF-20-100
C 226	1	21-80370A21	CAPACITOR	100PF-20-100
C 227	1	21-80370A21	CAPACITOR	100PF-20-100
C 228	1	21-80370A21	CAPACITOR	100PF-20-100
C 229	1	21-80370A14	CAPACITOR	22PF-5-100
C 230	1	21-80370A24	CAPACITOR	2200PF-20-100
C 231	1	21D82187B14	CAPACITOR	1000PF-10-100
C 232	1	21-80370A14	CAPACITOR	22PF-5-100
C 233	1	21-80370A12	CAPACITOR	15PF-5-100
C 234	1	21-80370A12	APACITOR	15PF-5-100
C 235	1	23D84665F01	CAPACITOR	10UF-25V
C 236	1	21-80370A10	CAPACITOR	10PF-5-100
C 237	1	21-80370A14	CAPACITOR	22PF-5-100
C 238	1	21-80370A14	CAPACITOR	22PF-5-100
C 239	1	21-80370A10	CAPACITOR	10PF-5-100
C 240	1	23D83441B15	CAPACITOR	1.0UF-20-35
C 241	1	21D82428B59	CAPACITOR	.01UF-2080-200
C 242	1	21D84494B04	CAPACITOR	100PF-5-500
C 243	1	21-80370A24	CAPACITOR	2200PF-20-100
C 244	1	21D84494B01	CAPACITOR	51PF-5-500
C 245	1	21-80370A14	CAPACITOR	22PF-5-100
C 246	1	21D84494B01	CAPACITOR	51PF-5-500
C 247	1	21D82428B59	CAPACITOR	.01UF-2080-200
C 248	1	21-80370A16	CAPACITOR	27PF-5-100
C 249	1	21-80370A14	CAPACITOR	22PF-5-100
C 250	1	21-80370A14	CAPACITOR	22PF-5-100
C 251	1	21-80370A24	CAPACITOR	2200PF-20-100
C 252	1	21-80370A12	CAPACITOR	15PF-5-100
C 253	1	21-80370A12	CAPACITOR	15PF-5-100
C 254	1	21-80370A24	CAPACITOR	2200PF-20-100
C 255	1	21-80370A24	CAPACITOR	2200PF-20-100
C 256	1	23D84665F01	CAPACITOR	10UF-25V
C 257	1	21-80370A07	CAPACITOR	100PF-10-100 NPO
C 258	1	21D84494B24	CAPACITOR	39PF-5-500
C 259	1	21D84494B24	CAPACITOR	39PF-5-500
C 260	1	21D82428B59	CAPACITOR	.01UF-2080-200
C 261	1	21D82428B59	CAPACITOR	.01UF-2080-200
C 262	1	21-80370A22	CAPACITOR	1000PF-20-100
C 263	1	21-80370A22	CAPACITOR	1000PF-20-100
C 264	1	21-80370A21	CAPACITOR	100PF-20-100
C 265	1	21D84494B04	CAPACITOR	100PF-5-500
C 266	1	21D82428B59	CAPACITOR	.01UF-2080-200
C 267	1	21D84494B34	CAPACITOR	68PF-5-500
C 268	1	21D84494B38	CAPACITOR	15PF-5-500
C 269	1	21D82428B59	CAPACITOR	.01UF-2080-200
C 270	1	21D82428B59	CAPACITOR	.01UF-2080-200
C 271	1	21-80369A93	CAPACITOR	100PF-5-500
C 272	1	21D82428B59	CAPACITOR	.01UF-2080-200
C 273	1	21D82428B59	CAPACITOR	.01UF-2080-200
C 274	1	21D865922	CAPACITOR	390PF-10-500
C 275	1	21-80370A17	CAPACITOR	3.9PF-.25-100
C 276	1	21-80370A17	CAPACITOR	3.9PF-.25-100
C 277	1	21-80370A11	CAPACITOR	12PF-5-100
C 278	1	21-80370A20	CAPACITOR	5.6PF-.25-100
C 279	1	21-80370A20	CAPACITOR	5.6PF-.25-100
C 280	1	21-80370A13	CAPACITOR	18PF-5-100
C 281	1	23D82397D04	CAPACITOR	15UF-20-15
C 282	1	21-80369A99	CAPACITOR	.01UF-10-100
C 283	1	23D84665F02	CAPACITOR	15UF-25V
C 284	1	23D84665F02	CAPACITOR	15UF-25V
C 285	1	23-80369A64	CAPACITOR	6.8UF-10-35
C 286	1	23-80369A66	CAPACITOR	100UF-25V
C 287	1	23D83441B18	CAPACITOR	4.7UF-20-20
C 288	1	21D82428B59	CAPACITOR	.01UF-2080-200
C 289	1	23D84665F01	CAPACITOR	10UF-25V
C 290	1	21-80370A03	CAPACITOR	6800PF-10-100
C 291	1	MMJ-035-156R-20	CAPACITOR	15UF-20-35
C 292	1	21-80370A21	CAPACITOR	100PF-20-100
C 293	1	21-80370A04	CAPACITOR	.022UF-10-100
C 294	1	21-80369A86	CAPACITOR	10PF-5-500
C 295	1	21D82428B10	CAPACITOR	3300PF-10-100
C 296	1	21-80370A09	CAPACITOR	1.5PF-.5PF-100
C 297	1	21-80369A87	CAPACITOR	15PF-5-500
C 298	1	21D84494B74	CAPACITOR	6PF-.5PF-500
C 299	1	21D84494B74	CAPACITOR	6PF-.5PF-500
C 300	1	21D84494B74	CAPACITOR	6PF-.5PF-500
C 301	1	21D82187B14	CAPACITOR	1000PF-10-100
C 302	1	21D82187B14	CAPACITOR	1000PF-10-100
C 303	1	21D82187B14	CAPACITOR	1000PF-10-100
C 304	1	21D82187B14	CAPACITOR	1000PF-10-100
C 305	1	23D84665F02	CAPACITOR	15UF-25V
C 306	1	23D84665F02	CAPACITOR	15UF-25V
C 307	1	21C82372C10	CAPACITOR	.05UF-20-25
C 308	1	21C82372C10	CAPACITOR	.05UF-20-25
C 309	1	21D84494B45	CAPACITOR	56PF-5-500
C 310	1	21D84494B38	CAPACITOR	15PF-5-500
C 311	1	21D82187B14	CAPACITOR	1000PF-10-100
C 312	1	23D82397D50	CAPACITOR	.22UF-20-35
C 313	1	23D84665F01	CAPACITOR	10UF-25V
C 314	1	MMJ-035-106R-20	CAPACITOR	10UF-20-35
C 315	1	MMJ-035-106R-20	CAPACITOR	10UF-20-35
C 316	1	MMJ-035-106R-20	CAPACITOR	10UF-20-35
C 317	1	21D82428B59	CAPACITOR	.01UF-2080-200
C 318	1	23D83441B15	CAPACITOR	1.0UF-20-35
C 319	1	21D82428B59	CAPACITOR	.01UF-2080-200
C 320	1	MMJ-035-156R-20	CAPACITOR	15UF-20-35
C 321	1	21D82187B14	CAPACITOR	1000PF-10-100
C 322	1	21D82428B59	CAPACITOR	.01UF-2080-200
C 323	1	21D82428B59	CAPACITOR	.01UF-2080-200
C 324	1	21-80369A88	CAPACITOR	22PF-5-500
C 325	1	21D82187B08	CAPACITOR	220PF-10-500
C 326	1	21D82187B08	CAPACITOR	220PF-10-500
C 327	1	21D82187B14	CAPACITOR	1000PF-10-100
C 328	1	21-14032G97	CAPACITOR	2PF-.5PF-500
C 329	1	21D82428B59	CAPACITOR	.01UF-2080-200
C 330	1	21D84494B74	CAPACITOR	6PF-5-500
C 331	1	21D82428B59	CAPACITOR	.01UF-2080-200
C 332	1	21D82428B59	CAPACITOR	.01UF-2080-200
C 333	1	21D82428B59	CAPACITOR	.01UF-2080-200
C 334	1	21D82428B59	CAPACITOR	.01UF-2080-200
C 335	1	21D84494B37	CAPACITOR	11PF-5-500
C 336	1	21D84494B74	CAPACITOR	6PF-.5PF-500
C 337	1	21D82428B59	CAPACITOR	.01UF-2080-200
C 338	1	21D82428B59	CAPACITOR	.01UF-2080-200
C 339	1	23D84665F01	CAPACITOR	10UF-25V
C 340	1	21-80370A21	CAPACITOR	100PF-20-100
C 341	1	21D82428B10	CAPACITOR	3300PF-10-100
C 342	1	23D84665F01	CAPACITOR	10UF-25V
C 343	1	21D82428B10	CAPACITOR	3300PF-10-100
C 344	1	23D84665F01	CAPACITOR	10UF-25V
C 345	1	23D84665F01	CAPACITOR	10UF-25V
C 346	1	21-80370A23	CAPACITOR	220PF-20-100
C 347	1	21-80370A23	CAPACITOR	220PF-20-100
C 348	1	21-80370A24	CAPACITOR	2200PF-20-100
C 349	1	23D82397D04	CAPACITOR	15UF-20-15
C 350	1	23D83441B15	CAPACITOR	1.0UF-20-35
C 351	1	21C82543H03	CAPACITOR	5000PF80-20-500
C 352	1	21C82543H03	CAPACITOR	5000PF80-20-500
C 353	1	21C82543H03	CAPACITOR	5000PF80-20-500
C 354	1	21C82543H03	CAPACITOR	5000PF80-20-500
C 355	1	21C82543H03	CAPACITOR	5000PF80-20-500
C 357	1	21C82543H03	CAPACITOR	5000PF80-20-500
C 358	1	21C82543H03	CAPACITOR	5000PF80-20-500
C 359	1	21C82543H03	CAPACITOR	5000PF80-20-500
C 360	1	21C82543H03	CAPACITOR	5000PF80-20-500
C 361	1	21C82543H03	CAPACITOR	5000PF80-20-500
C 362	1	21C82543H03	CAPACITOR	5000PF80-20-500
C 363	1	21C82543H03	CAPACITOR	5000PF80-20-500
C 364	1	21C82543H03	CAPACITOR	5000PF80-20-500
C 365	1	21C82543H03	CAPACITOR	5000PF80-20-500
C 366	1	21C82543H03	CAPACITOR	5000PF80-20-500
C 367	1	21C82543H03	CAPACITOR	5000PF80-20-500
C 368	1	21C82543H03	CAPACITOR	5000PF80-20-500

Figure 11-7. RF Synthesizer A5A2 (RTC-4010B)
Parts Location Diagram

rt Value
F-10-100
25V
25V
-20-25
-20-25
5-500
5-500
F-10-100
-20-35
25V
20-35
20-35
20-35
-2080-200
-20-35
-2080-200
20-35
F-10-100
-2080-200
-2080-200
5-500
-10-500
-10-500
F-10-100
PF-500
-2080-200
-500
-2080-200
-2080-200
-2080-200
-2080-200
5-500
PF-500
2080-200
2080-200
25V
-20-100
F-10-100
25V
F-10-100
25V
25V
20-100
20-100
F-20-100
0-15
20-35
F80-20-500
F80-20-500
F80-20-500
F80-20-500
F80-20-500
F80-20-500
F80-20-500
F80-20-500
F80-20-500
F80-20-500
F80-20-500
F80-20-500
F80-20-500
F80-20-500
F80-20-500
F80-20-500
F80-20-500

Find No.	Qty. Req.	Part No.	Nomenclature	Part Value
C 369	1	21C82543H03	CAPACITOR	5000PF80-20-500
C 370	1	21-80370A07	CAPACITOR	100PF-10-100 NPO
C 371	1	23D83441B15	CAPACITOR	1.0UF-20-35
C 372	1	21D82187B14	CAPACITOR	1000PF-10-100
C 373	1	21D82187B14	CAPACITOR	1000PF-10-100
C 374	1	21-80370A22	CAPACITOR	1000PF-20-100
C 375	1	21-80370A22	CAPACITOR	1000PF-20-100
C 376	1	23D83441B18	CAPACITOR	4.7UF-20-20
C 377	1	23D83441B18	CAPACITOR	4.7UF-20-20
C 378	1	23D83441B15	CAPACITOR	1.0UF-20-35
C 379	1	21-80370A22	CAPACITOR	1000PF-20-100
C 380	1	21-80370A07	CAPACITOR	100PF-10-100 NPO
C 381	1	21-80370A22	CAPACITOR	1000PF-20-100
C 382	1	21-80370A09	CAPACITOR	1.5PF-.5PF-100
C 383	1	23D82397D18	CAPACITOR	33UF-20-10
C 384	1	21-80370A10	CAPACITOR	10PF-5-100
C 385	1	21-80370A22	CAPACITOR	1000PF-20-100
C 386	1	21-80370A22	CAPACITOR	1000PF-20-100
C 387	1	21-80370A19	CAPACITOR	4.7PF-.5PF-100
C 388	S01	21-80370A09	CAPACITOR	1.5PF-.5PF-100
C 389	1	21-80370A25	CAPACITOR	220PF-5-50 NPO
C 390	1	21-80370A23	CAPACITOR	220PF-20-100
C 391	1	21-80370A23	CAPACITOR	220PF-20-100
C 392	1	21-80370A23	CAPACITOR	220PF-20-100
C 393	1	21-80370A23	CAPACITOR	220PF-20-100
C 394	1	21D84494B38	CAPACITOR	15PF-5-500
C 395	1	21D84494B38	CAPACITOR	15PF-5-500
C 396	1	21-80370A22	CAPACITOR	1000PF-20-100
C 397	1	21-80369A83	CAPACITOR	2PF-.5PF-500
C 398	S01	21-80348A96	CAPACITOR	10PF-10-200
C 398	S01	21-80369A85	CAPACITOR	5PF-.5PF-500
C 399	1	21-80370A23	CAPACITOR	220PF-20-100
C 400	1	21-80370A23	CAPACITOR	220PF-20-100
C 401	1	21-80369A84	CAPACITOR	5PF-.5PF-500
CR201	1	48-80345A74	VARACTOR	
CR202	1	48-84463K02	DIODE	
CR203	1	48-84463K02	DIODE	
CR204	1	48-84463K02	DIODE	
CR205	1	48-84463K02	DIODE	
CR206	1	48-80345A62	DIODE	
CR207	1	48-80345A62	DIODE	
CR208	1	48-80345A62	DIODE	
CR209	1	48-80345A62	DIODE	
CR210	1	48-80345A62	DIODE	
CR211	1	48-80345A62	DIODE	
CR212	1	48-80345A62	DIODE	
CR214	1	48-84463K02	DIODE	
CR215	1	48-80345A76	VARACTOR	
CR216	1	48-80345A76	VARACTOR	
CR217	1	48-80345A77	DIODE	
CR218	1	48-80345A77	DIODE	
CR219	1	48-84463K02	DIODE	
CR220	1	48-84463K02	DIODE	
CR221	1	48D84616A01	DIODE	
CR222	1	48D84616A01	DIODE	
CR223	1	48-80345A62	DIODE	
CR224	1	48-80345A62	DIODE	
CR225	1	48-80345A62	DIODE	
CR226	1	48-80345A62	DIODE	
CR227	1	48-84463K02	DIODE	
CR229	1	48-80369A01	VARACTOR	
CR230	1	48-80369A01	VARACTOR	
CR233	1	48-84463K02	DIODE	
CR235	1	48-80369A01	VARACTOR	
CR236	1	48-80369A01	VARACTOR	

Find No.	Qty. Req.	Part No.	Nomenclature	Part Value
CR241	1	48-80345A62	DIODE	
CR242	1	48-80345A62	DIODE	
FL201	1	48-80346A08	CRYSTAL FILTER	10MHZ-2-POLE
K 201	1	80-80346A02	RELAY	
L 201	1	24-80369A19	COIL	.1UH
L 202	1	24-80369A19	COIL	.1UH
L 203	1	24-80369A50	COIL, AIR WOUND	1T 20
L 204	1	24-80369A19	COIL	.1UH
L 205	1	24-80369A19	COIL	.1UH
L 206	1	24-80369A49	COIL,AIR WOUND	5 20
L 207	1	24-80369A49	COIL,AIR WOUND	5 20
L 208	1	24-80369A49	COIL,AIR WOUND	5 20
L 209	1	24C83961B01	CHOKE,RF	
L 210	1	24C83961B01	CHOKE,RF	
L 211	1	24-80369A23	COIL	.15UH-10
L 213	1	24-80369A50	COIL, AIR WOUND	1T 20
L 214	1	24-80369A50	COIL, AIR WOUND	1T 20
L 215	1	24C83961B01	CHOKE,RF	
L 216	1	24-80369A19	COIL	.1UH
L 217	1	24-80369A19	COIL	.1UH
L 218	1	24-80369A24	COIL	.18UH
L 219	1	24-80369A48	COIL, AIR WOUND	3T 24
L 220	1	24-80369A48	COIL, AIR WOUND	3T 24
L 221	1	24-80369A51	COIL,AIR WOUND	4T 24
L 222	1	24-80369A51	COIL,AIR WOUND	4T 24
L 224	1	24-80369A25	COIL	.22UH
L 225	1	24-80369A26	COIL	.33UH
L 226	1	24-80369A19	COIL	.1UH
L 227	1	24-80369A19	COIL	.1UH
L 228	1	24-80369A27	COIL	.47UH
L 229	1	24-80369A26	COIL	.33UH
L 230	1	WEE-12000	INDUCTOR	12MH
L 231	1	WEE-12000	INDUCTOR	12MH
L 232	1	24-80369A14	COIL	.47UH-1
L 233	1	24-80369A29	COIL	10UH
L 234	1	24-80369A37	COIL	100UH
L 235	1	24-80369A37	COIL	100UH
L 236	1	24-80369A25	COIL	.22UH
L 237	1	74-15169A01	BEAD, FERRITE	
L 238	1	24-80369A23	COIL	.15UH-10
L 239	1	24-80369A193	COIL	1UH-10
L 240	1	24C83961B01	CHOKE,RF	
L 241	1	WEE-12000	INDUCTOR	12MH
L 242	1	24-80369A19	COIL	.1UH
L 243	1	24-80369A37	COIL	100UH
L 244	1	24-80369A19	COIL	.1UH
L 245	1	24-80369A19	COIL	.1UH
L 246	1	24-80369A19	COIL	.1UH
L 247	1	24-80369A37	COIL	100UH
L 248	1	24-80369A31	COIL	22UH
L 250	1	24-80369A52	COIL	
Q 201	1	48-80345A46	TRANSISTOR	
Q 202	1	48-80368A92	TRANSISTOR	MPS6519 SCREENED
Q 203	1	48-80368A92	TRANSISTOR	MPS6519 SCREENED
Q 204	1	48-84309A61	TRANSISTOR	
Q 205	1	48-84309A61	TRANSISTOR	
Q 206	1	48-80345A54	TRANSISTOR	
Q 207	1	48R00869870	TRANSISTOR	
Q 208	1	48-80368A91	TRANSISTOR	MPS6520 SCREENED
Q 209	1	48-80368A91	TRANSISTOR	MPS6520 SCREENED
Q 210	1	48-80368A92	TRANSISTOR	MPS6519 SCREENED
Q 211	1	48-80368A92	TRANSISTOR	MPS6519 SCREENED
Q 212	1	48-80345A47	TRANSISTOR	
Q 213	1	48R00869870	TRANSISTOR	
Q 214	1	48R00869870	TRANSISTOR	

Find No.	Qty. Req.	Part No.	Nomenclature	Part Value
Q 215	1	48R00869870	TRANSISTOR	
Q 216	1	48-80368A92	TRANSISTOR	MPS6519 SCREENED
Q 217	1	48-6123A22	TRANSISTOR	
Q 218	1	48-80346A65	TRANSISTOR	
Q 219	1	48-2089C01	TRANSISTOR	
Q 220	1	48R00869870	TRANSISTOR	
Q 221	1	48-80368A91	TRANSISTOR	MPS6520 SCREENED
Q 222	1	48-80368A91	TRANSISTOR	MPS6520 SCREENED
Q 223	1	48-80345A56	TRANSISTOR	
Q 224	1	48-84309A61	TRANSISTOR	
Q 225	1	48-84309A61	TRANSISTOR	
Q 226	1	48-84309A61	TRANSISTOR	
Q 227	1	48-80345A56	TRANSISTOR	
Q 228	1	48-80368A92	TRANSISTOR	MPS6519 SCREENED
Q 229	1	48-84308A92	TRANSISTOR	
Q 230	1	48-86851C32	TRANSISTOR	
Q 231	1	48-84302A22	TRANSISTOR	
Q 232	1	48R00869870	TRANSISTOR	
Q 233	1	48-2089C01	TRANSISTOR	
R 201	1	6S124A18	RESISTOR	51-5-1/4
R 202	1	6S124A41	RESISTOR	470-5-1/4
R 203	1	6S124A41	RESISTOR	470-5-1/4
R 204	1	6S124A25	RESISTOR	100-5-1/4
R 205	1	6S185A25	RESISTOR	100-5-1/8
R 206	1	6S124A41	RESISTOR	470-5-1/4
R 207	1	6S124A41	RESISTOR	470-5-1/4
R 208	1	6S124A41	RESISTOR	470-5-1/4
R 209	1	6S124A41	RESISTOR	470-5-1/4
R 210	1	6S124A41	RESISTOR	470-5-1/4
R 211	1	6S124A41	RESISTOR	470-5-1/4
R 212	1	6S185A53	RESISTOR	1.5K-5-1/8
R 213	1	6S124A31	RESISTOR	180-5-1/4
R 214	1	6S124A31	RESISTOR	180-5-1/4
R 215	1	6S124A15	RESISTOR	39-5-1/4
R 216	1	6S124A41	RESISTOR	470-5-1/4
R 217	1	6S124A41	RESISTOR	470-5-1/4
R 218	1	6S124A59	RESISTOR	2.7K-5-1/4
R 219	1	6S124A59	RESISTOR	2.7K-5-1/4
R 220	1	6S124A79	RESISTOR	18K-5-1/4
R 221	1	6S124A59	RESISTOR	2.7K-5-1/4
R 222	1	6S124A59	RESISTOR	2.7K-5-1/4
R 223	1	6S124A79	RESISTOR	18K-5-1/4
R 224	1	6S124A49	RESISTOR	1K-5-1/4
R 225	1	6S124A79	RESISTOR	18K-5-1/4
R 227	1	6S124A43	RESISTOR	560-5-1/4
R 228	1	6S124A29	RESISTOR	150-5-1/4
R 229	1	6S124A29	RESISTOR	150-5-1/4
R 230	1	6S185A73	RESISTOR	10K-5-1/8
R 231	1	6S124A25	RESISTOR	100-5-1/4
R 232	1	6S185A33	RESISTOR	220-5-1/8
R 233	1	6S185A33	RESISTOR	220-5-1/8
R 234	1	6S185A09	RESISTOR	22-5-1/8
R 235	1	6S185A85	RESISTOR	33K-5-1/8
R 236	1	6S185A95	RESISTOR	82K-5-1/8
R 237	1	6S185A47	RESISTOR	820-5-1/8
R 238	1	6S185A49	RESISTOR	1K-5-1/8
R 239	1	6S124A25	RESISTOR	100-5-1/4
R 240	1	6S185A18	RESISTOR	51-5-1/8
R 241	1	6S185A41	RESISTOR	470-5-1/8
R 242	1	6S185A43	RESISTOR	560-5-1/8
R 243	1	6S185A43	RESISTOR	560-5-1/8
R 244	1	6S185A53	RESISTOR	1.5K-5-1/8
R 245	1	6S185A33	RESISTOR	220-5-1/8
R 246	1	6S185A33	RESISTOR	220-5-1/8

Find No.	Qty. Req.	Part No.	Nomenclature	Part Value
R 247	1	6S124A31	RESISTOR	180-5-1/4
R 248	1	6S185A05	RESISTOR	15-5-1/8
R 249	1	6S185A05	RESISTOR	15-5-1/8
R 250	1	6S124A97	RESISTOR	100K-5-1/4
R 251	1	6S124A85	RESISTOR	33K-5-1/4
R 252	1	6S185A57	RESISTOR	2.2K-5-1/8
R 253	1	6S185A49	RESISTOR	1K-5-1/8
R 254	1	6S185A53	RESISTOR	1.5K-5-1/8
R 255	1	6S185A45	RESISTOR	680-5-1/8
R 256	1	6S185A09	RESISTOR	22-5-1/8
R 257	1	6S185A09	RESISTOR	22-5-1/8
R 258	1	6S185A21	RESISTOR	68-5-1/8
R 259	1	6S185A49	RESISTOR	1K-5-1/8
R 260	1	6S185A49	RESISTOR	1K-5-1/8
R 261	1	6S185A49	RESISTOR	1K-5-1/8
R 262	1	6S185A49	RESISTOR	1K-5-1/8
R 263	1	6S185A49	RESISTOR	1K-5-1/8
R 264	1	6S185A49	RESISTOR	1K-5-1/8
R 265	1	6S124A73	RESISTOR	10K-5-1/4
R 266	1	6S124A65	RESISTOR	4.7K-5-1/4
R 267	1	6S185A57	RESISTOR	2.2K-5-1/8
R 268	1	6S185A65	RESISTOR	4.7K-5-1/8
R 269	1	6S185A59	RESISTOR	2.7K-5-1/8
R 270	1	6S185A75	RESISTOR	12K-5-1/8
R 271	1	6S185A67	RESISTOR	5.6K-5-1/8
R 272	1	6S185A29	RESISTOR	150-5-1/8
R 273	1	6S185A71	RESISTOR	8.2K-5-1/8
R 274	1	6S185A75	RESISTOR	12K-5-1/8
R 275	1	6S185A37	RESISTOR	330-5-1/8
R 276	1	6S185A29	RESISTOR	150-5-1/8
R 277	1	6S124A31	RESISTOR	180-5-1/4
R 278	1	6S185A17	RESISTOR	47-5-1/8
R 279	1	6S185A05	RESISTOR	15-5-1/8
R 281	1	6S185A53	RESISTOR	1.5K-5-1/8
R 282	1	6S185A33	RESISTOR	220-5-1/8
R 283	1	6S185A33	RESISTOR	220-5-1/8
R 284	1	6S185A05	RESISTOR	15-5-1/8
R 285	1	6S185A05	RESISTOR	15-5-1/8
R 286	1	6S185A27	RESISTOR	120-5-1/8
R 287	1	6S185A21	RESISTOR	68-5-1/8
R 288	1	6S185A27	RESISTOR	120-5-1/8
R 289	1	6S185A13	RESISTOR	33-5-1/8
R 290	1	6S185A07	RESISTOR	18-5-1/8
R 291	1	6S185A69	RESISTOR	6.8K-5-1/8
R 292	1	6S185A69	RESISTOR	6.8K-5-1/8
R 293	1	6S185A63	RESISTOR	3.9K-5-1/8
R 294	1	6S185A39	RESISTOR	390-5-1/8
R 295	1	6S185A36	RESISTOR	300-5-1/8
R 296	1	6S185A36	RESISTOR	300-5-1/8
R 297	1	6S185A07	RESISTOR	18-5-1/8
R 298	1	6S185A44	RESISTOR	620-5-1/8
R 299	1	6S185A44	RESISTOR	620-5-1/8
R 300	1	6S185A18	RESISTOR	51-5-1/8
R 301	1	6S124A15	RESISTOR	39-5-1/4
R 302	1	6S124A33	RESISTOR	220-5-1/4
R 303	1	6S124A33	RESISTOR	220-5-1/4
R 304	1	6S124A45	RESISTOR	680-5-1/4
R 305	1	6S124A35	RESISTOR	270-5-1/4
R 307	1	6S124A15	RESISTOR	39-5-1/4
R 308	1	6S124A49	RESISTOR	1K-5-1/4
R 309	1	6S124A59	RESISTOR	2.7K-5-1/4
R 310	1	6S124A73	RESISTOR	10K-5-1/4
R 311	1	6S124A73	RESISTOR	10K-5-1/4
R 312	1	6S124A73	RESISTOR	10K-5-1/4

Figure 11-7. RF Synthesizer A5A2 (RTC-4010B) Parts Location Diagram

SECTION 12

AUDIO SYNTHESIZER (A6)

12-1. General. Generation, processing, and control of modulation audio is the function of the Audio Synthesizer module. Three modulation signals, private line, digital private line, and a fixed 1 kHz, are generated on the board. Processing for external microphone and BNC jack audio inputs as well as sumation of all modulation sources to form a composite source is provided. Switching of the composite source to the appropriate modulator completes the function of the Audio Synthesizer. A block diagram of the Audio Synthesizer is shown in figure 12-1 with its schematic in figure 12-2.

12-2. Private Line Generator. Private line tones from 10 Hz to 10 kHz in 0.1 Hz increments are synthesized using a phase accumulative technique. Consider the 360 degrees in a cycle to be divided into 2^{20} pieces. A 20 bit digital accumulator incrementing at some fixed rate could then at any instant represent a fixed point in the 360 cycle. That is, if the accumulator was half full it would represent the 180° point and if totally full would represent the 360° point.

12-3. The number of times per second that the accumulator goes through its complete cycle determines the output frequency. If the increment rate is fixed, the time required to accumulate 2^{20} bits can be changed by changing the number of bits added at each increment time.

12-4. The PL synthesizer increments at a 104 857.6 Hz rate so that if only one bit were added each time, the time to complete one cycle would be 10 seconds. Processor loaded control latches determine the number of bits to be added at each increment time and thus the final output frequency. A 20 Bit Adder adds the control word to the current word in the 20 bit accumulator Latch. At the next increment time the Adder output is latched and becomes the next input to the Adder.

12-5. Conversion of the linear digital output of the 20-Bit Latch accumulator into a sinusoidal digital output is the function of the Decode ROM. A Digital to Analog (D/A) converter following the ROM converts the sinusoidal information into a quantized sinewave having a period equal to the cycle time of the 20-Bit Latch accumulator.

12-6. A bandpass filter with a 10 Hz to 10 kHz passband filters the quantized waveform to a sinewave having less than 1% distortion. The level of the sinewave is processor controllable by a programmable attenuator having 0, 10, 20, and 30 dB settings. The output of the PL generator is switched with the output of the DPL generator to give the INT MOD signal.

12-7. DPL Generator. The 23 bit Digital Private Line (DPL) word is generated by the processor from the 3-digit code. The 23-bit word is then transferred to a serial shift register and clocked out at a 133 Hz rate. Connecting the output of the shift register back to its input causes the 23-bit word to be continuously repeated.

12-8. A 133 Hz tone from the PL generator is the DPL clock input. For the DPL output mode the tone is gated to the clock input of the shift register by the Shift Register Control circuit. During the load mode the Shift Register Control gates a control latch to the shift register input. Twenty three data bits and clock pulses are then provided by the processor to load the DPL word. At the completion of the load mode, the Shift Register Control switches back to the output mode to cause the DPL word to be cycled through the shift register at the 133 Hz rate.

12-9. A bandpass filter following the shift register output removes the higher frequency components of the digital signal. The filtered DPL signal is then applied to the select switch. For the DPL off code (133 Hz tone), the processor switches the INT MOD line to the PL output so that a 133 Hz sinewave is output.

12-10. 1 kHz Tone. A filtered 1 kHz square wave provides the fixed 1 kHz modulation source. The SYNTH 1 kHz signal from the RF Synthesizer is filtered to less than 1% distortion by a bandpass filter. The filter output is the 1 kHz signal source.

12-11. External Modulation. A microphone and a front panel jack are the external modulation inputs. An Instaneous Deviation Control (IDC) circuit amplifies and limits the microphone signal (MIC IN) before sumation with the signal (EXT MOD IN) from the front panel jack. The sumation signal is the EXT MOD source.

12-12. Modulation Control. Level control of the three modulation sources is by either the front panel controls or the IEEE interface module. The level adjusted sources are then returned to the Audio Synthesizer module where they are summed together to form the composite modulation audio. The composite signal is then routed to the Scope/DVM Control module (MOD CAL AUDIO) for modulation determination, to a buffer amp which drives the front panel modulation output (MOD TO FP), and to a Modulation Select Switch which routes the signal to the desired modulator.

12-13. Modulation audio is switched to the speaker (VOL CNTL AUDIO) for any generate mode, to the DSBSC modulator (DSBSC MOD) for sideband modulation, to the RF Synthesizer for frequency modulation (FM MOD), to the offset oscillator for frequency modulation of the duplex output (OFFSET MOD), and to the RF output leveling loop for amplitude modulation. The signal for amplitude modulation is summed with a 5 VDC level and then routed to the variable RF level control on the front panel (5 VDC + AM MOD). At the RF level control the signal is attenuated according to the level setting to give the DC plus AM reference signal for the output leveling loop.

12-14. Module Control. Processor control of the Audio Synthesizer is via the AF control bus. The four bit address bus (AF ADD BUS 0-3) is decoded by the Address Decoder to determine which control latch is to be accessed. Control data is transferred to the accessed latch on the four bit data bus (AF DATA BUS 0-3). Synchronization of the data transfere is the function of the AF BUS EN1 signal line.

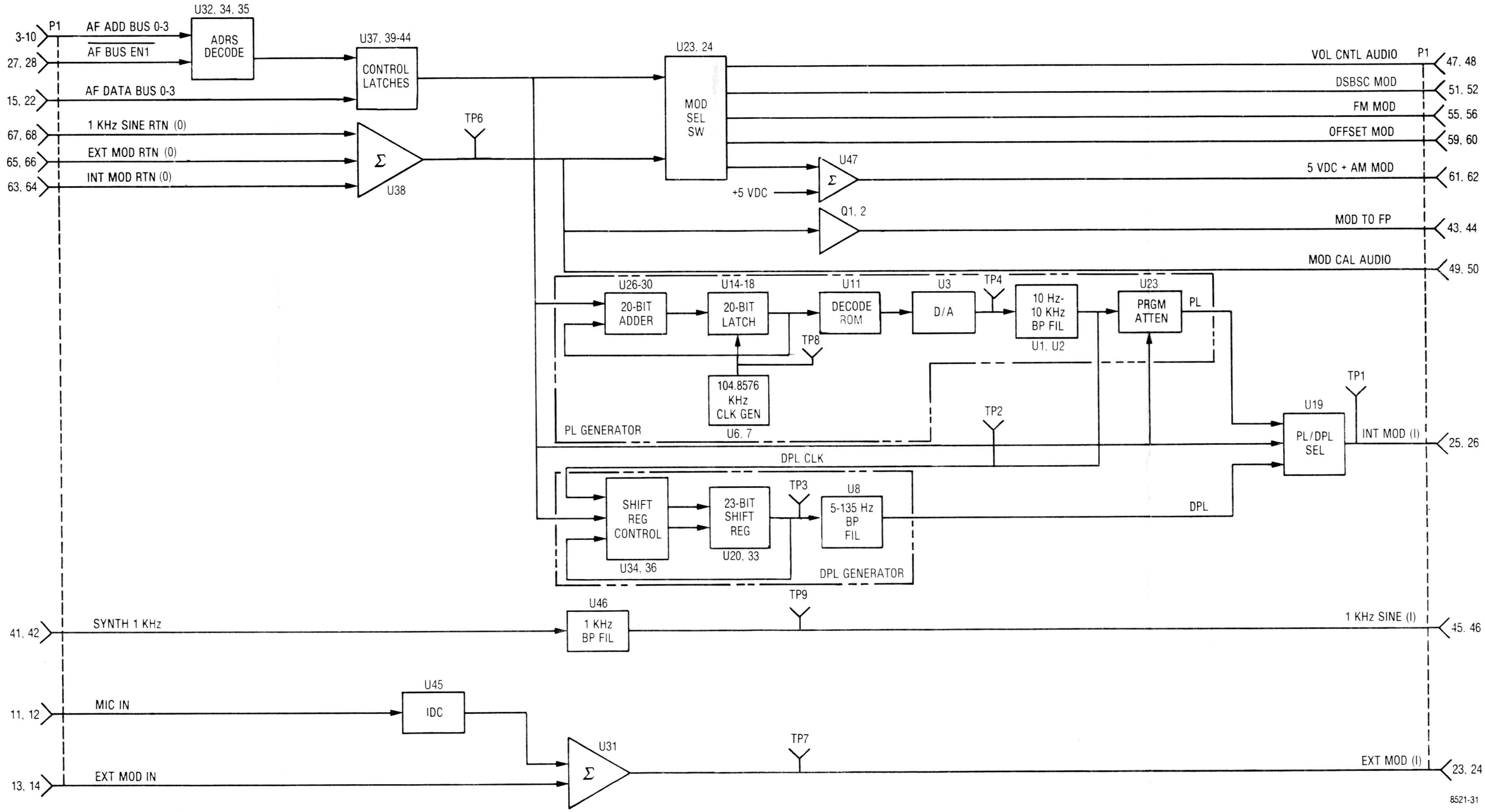

Figure 12-1. Audio Synthesizer A6 Block Diagram

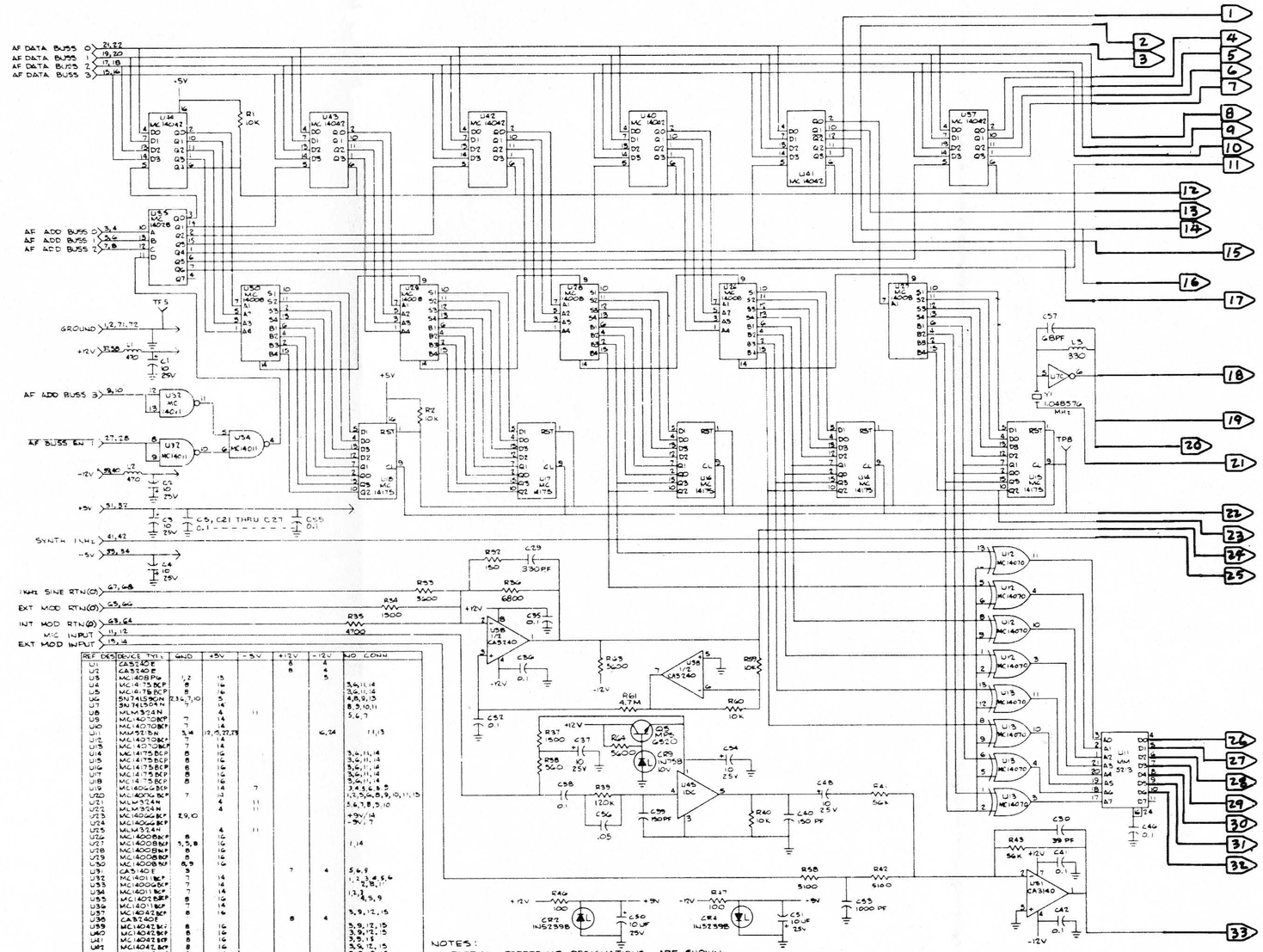

REF DES	DEVICE TYPE	GND	+5V	-5V	+12V	-12V	NO CONN
U1	CA3140E				8	4	
U2	CA3140E				8	4	
U3	MC1408P6	1,2	13			5	
U4	MC14175BCP	8	16				3,6,11,14
U5	MC14175BCP	8	16				3,6,11,14
U6	SN74LS90N	7,11,9,10	5				4,8,9,13
U7	SN74LS90N	7	14				8,9,10,11
U8	MLM324N		4	11			5,6,7
U9	MC14070BCP	7	14				
U10	MC14070BCP	7	14				
U11	MM5113N	3,4	12,13,22,23			6,24	11,13
U12	MC14070BCP	7	14				
U13	MC14070BCP	7	14				
U14	MC14175BCP	8	16				3,6,11,14
U15	MC14175BCP	8	16				3,6,11,14
U16	MC14175BCP	8	16				3,6,11,14
U17	MC14175BCP	8	16				3,6,11,14
U18	MC14175BCP	8	16				3,6,11,14
U19	MC14066BCP		14	7			3,4,5,6,8,9
U20	MC14066BCP	7	14				1,2,5,6,8,9,10,11,13
U21	MLM324N		4	11			5,6,7,8,9,10
U22	MLM324N		4	11			
U23	MC14066BCP	7,9,10					+9V/14
U24	MC14066BCP						-9V/7
U25	MLM324N		4	11			
U26	MC14008BCP	8	16				
U27	MC14008BCP	3,5,8	16				1,14
U28	MC14008BCP	8	16				
U29	MC14008BCP	8	16				
U30	MC14008BCP	8,9	16				
U31	CA3140E	3			7	4	5,6,9
U32	MC14011BCP	7	14				1,2,3,4,5,6
U33	MC14066BCP	7	14				2,8,11
U34	MC14011BCP	7	14				1,2,3
U35	MC14028BCP	8	16				4,5,9
U36	MC14011BCP	7	14				
U37	MC14042BCP	8	16				3,9,12,15
U38	CA3140E				8	4	
U39	MC14042BCP	8	16				3,9,12,15
U40	MC14042BCP	8	16				3,9,12,15
U41	MC14042BCP	8	16				3,9,12
U42	MC14042BCP	8	16				3,9,12,15
U43	MC14042BCP	8	16				3,9,12,15
U44	MC14042BCP	8	16				3,9,12,15
U45	10K	3					2
U46	CA3140E	3,5			8	4	
U47	CA3140E						4,5,6,7,8

NOTES:

1. PARTIAL REFERENCE DESIGNATIONS ARE SHOWN. FOR COMPLETE DESIGNATION PREFIX WITH 1A6.
2. FOR REFERENCE DRAWINGS REFER TO ASSEMBLY 01-P00426N
3. UNLESS OTHERWISE SPECIFIED:
   ALL RESISTORS ARE IN OHMS ± 5 PCT, 1/4 WATT
   ALL CAPACITORS ARE IN UF
   ALL INDUCTORS ARE IN UH
   ALL VOLTAGES ARE IN DC.

Figure 12-2. Audio Synthesizer A6 Schematic Diagram (Sheet 1 of 2)

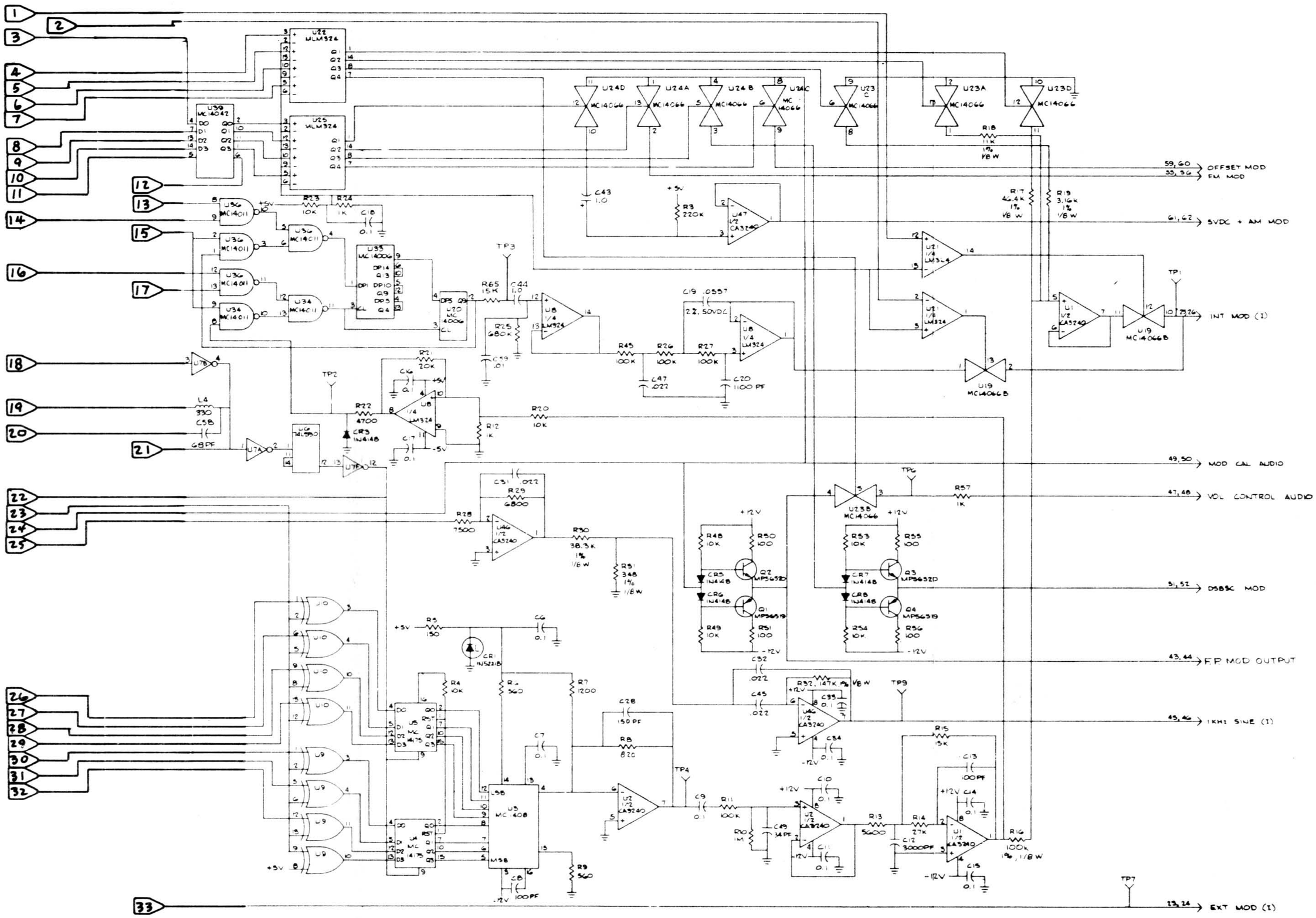

Figure 12-2. Audio Synthesizer A6 Schematic Diagram (Sheet 2 of 2)

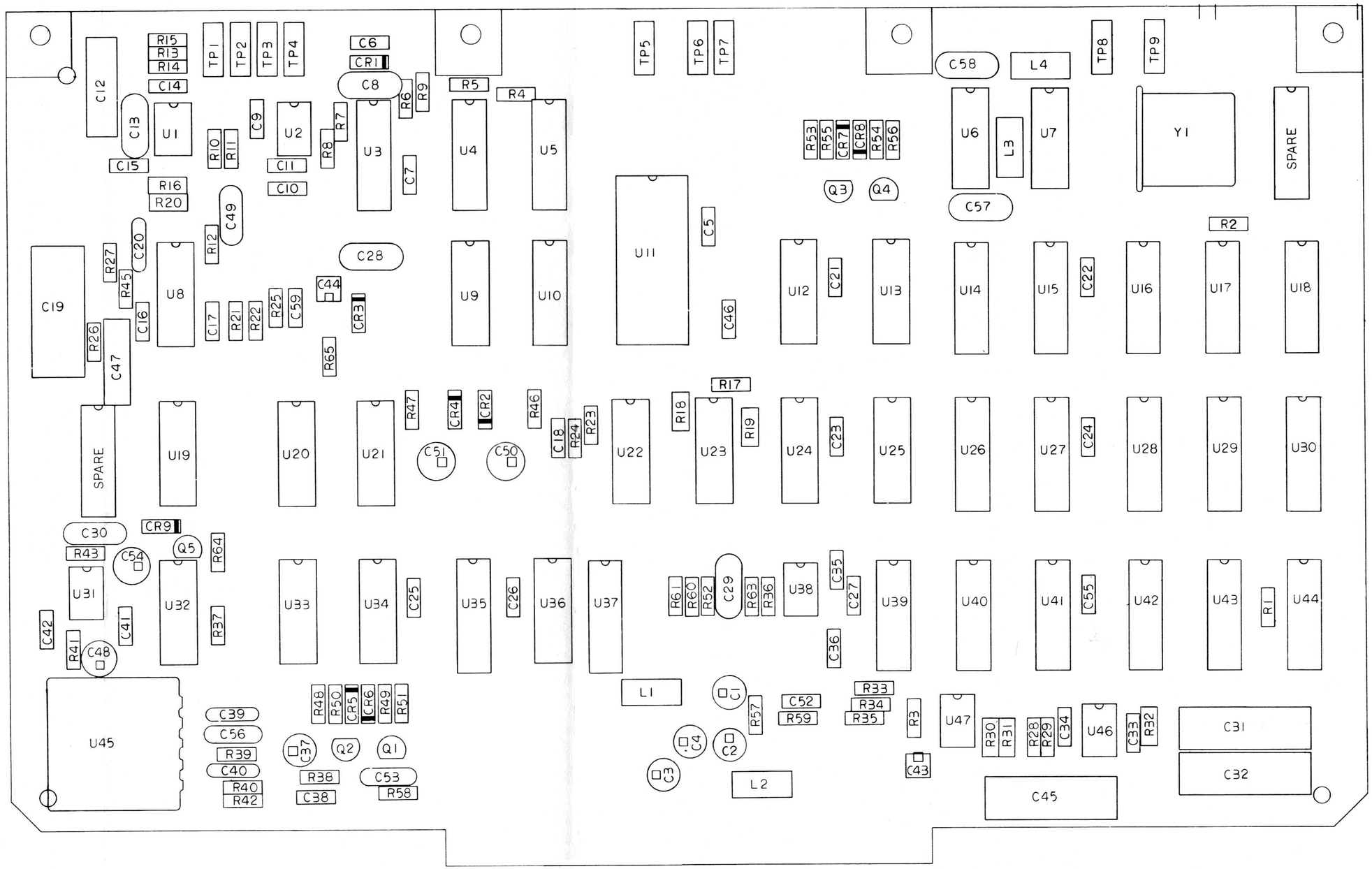

Figure 12-3. Audio Synthesizer A6 (RTC-4011B)
Parts Location Diagram

Find No.	Qty. Req.	Part No.	Nomenclature	Part Value
		RTC-4011B	AUDIO SYNTHESIZER	
001	1	84-80335A11	PWB, AUDIO SYNTHESIZE	
002	1	7-80335A63	BRACKET,PWB MTG	
003	4	MS20470AD4-5	RIVET	1/8X.312
004	AR	SN63WRP3	SOLDER	
005	AR	11-14167A01	INK	BLACK
006	2	5C84500B03	EYELET	
007	2	42C84284B01	RETAINER	
008	2	MS35206-214	SCREW,PH	4-40X.312
009	AR	RTV3145	ADHESIVE,SIL RUBBER	
C 001	1	23D84665F01	CAPACITOR	10UF-25V
C 002	1	23D84665F01	CAPACITOR	10UF-25V
C 003	1	23D84665F01	CAPACITOR	10UF-25V
C 004	1	23D84665F01	CAPACITOR	10UF-25V
C 005	1	21-80369A82	CAPACITOR	.1UF-20-100
C 006	1	21-80369A82	CAPACITOR	.1UF-20-100
C 007	1	21-80369A82	CAPACITOR	.1UF-20-100
C 008	1	21D84494B04	CAPACITOR	100PF-5-500
C 009	1	21-80369A82	CAPACITOR	.1UF-20-100
C 010	1	21-80369A82	CAPACITOR	.1UF-20-100
C 011	1	21-80369A82	CAPACITOR	.1UF-20-100
C 012	1	21K863395	CAPACITOR	3000PF-2-500
C 013	1	21D84494B04	CAPACITOR	100PF-5-500
C 014	1	21-80369A82	CAPACITOR	.1UF-20-100
C 015	1	21-80369A82	CAPACITOR	.1UF-20-100
C 016	1	21-80369A82	CAPACITOR	.1UF-20-100
C 017	1	21-80369A82	CAPACITOR	.1UF-20-100
C 018	1	21-80369A82	CAPACITOR	.1UF-20-100
C 019	1	08D84326A27	CAPACITOR	.0557UF-2-50
C 020	1	21D83596E32	CAPACITOR	1100PF-5-200
C 021	1	21-80369A82	CAPACITOR	.1UF-20-100
C 022	1	21-80369A82	CAPACITOR	.1UF-20-100
C 023	1	21-80369A82	CAPACITOR	.1UF-20-100
C 024	1	21-80369A82	CAPACITOR	.1UF-20-100
C 025	1	21-80369A82	CAPACITOR	.1UF-20-100
C 026	1	21-80369A82	CAPACITOR	.1UF-20-100
C 027	1	21-80369A82	CAPACITOR	.1UF-20-100
C 028	1	21D84494B07	CAPACITOR	150PF-5-500
C 029	1	21D84494B16	CAPACITOR	330PF-5-500
C 030	1	21D84494B24	CAPACITOR	39PF-5-500
C 031	1	08D84326A48	CAPACITOR	.022UF-1-50
C 032	1	08D84326A48	CAPACITOR	.022UF-1-50
C 033	1	21-80369A82	CAPACITOR	.1UF-20-100
C 034	1	21-80369A82	CAPACITOR	.1UF-20-100
C 035	1	21-80369A82	CAPACITOR	.1UF-20-100
C 036	1	21-80369A82	CAPACITOR	.1UF-20-100
C 037	1	23D84665F01	CAPACITOR	10UF-25V
C 038	1	21-80369A82	CAPACITOR	.1UF-20-100
C 039	1	21D84494B07	CAPACITOR	150PF-5-500
C 040	1	21D84494B07	CAPACITOR	150PF-5-500
C 041	1	21-80369A82	CAPACITOR	.1UF-20-100
C 042	1	21-80369A82	CAPACITOR	.1UF-20-100
C 043	1	23D83441B15	CAPACITOR	1.0UF-20-35
C 044	1	23D83441B15	CAPACITOR	1.0UF-20-35
C 045	1	08D84326A48	CAPACITOR	.022UF-1-50
C 046	1	21-80369A82	CAPACITOR	.1UF-20-100

Find No.	Qty. Req.	Part No.	Nomenclature	Part Value
C 047	1	08D82096J08	CAPACITOR	.022UF-10-250
C 048	1	23D84665F01	CAPACITOR	10UF-25V
C 049	1	21D84494B30	CAPACITOR	34PF-5-500
C 050	1	23D84665F01	CAPACITOR	10UF-25V
C 051	1	23D84665F01	CAPACITOR	10UF-25V
C 052	1	21-80369A82	CAPACITOR	.1UF-20-100
C 053	1	21D82187B14	CAPACITOR	1000PF-10-100
C 054	1	23D84665F01	CAPACITOR	10UF-25V
C 055	1	21-80369A82	CAPACITOR	.1UF-20-100
C 056	1	21C82372C10	CAPACITOR	.05UF-20-25
C 057	1	21D84494B34	CAPACITOR	68PF-5-500
C 058	1	21D84494B34	CAPACITOR	68PF-5-500
C 059	1	21D82428B19	CAPACITOR	.01UF-20-500
CR001	1	48-80345A80	DIODE,ZENER	2.4V-5-.5
CR002	1	48-80345A81	DIODE,ZENER	9V
CR003	1	48-84463K02	DIODE	
CR004	1	48-80345A81	DIODE,ZENER	9V
CR005	1	48-84463K02	DIODE	
CR006	1	48-84463K02	DIODE	
CR007	1	48-84463K02	DIODE	
CR008	1	48-84463K02	DIODE	
CR009	1	48-82256C11	DIODE,ZENER	10V-5-.4
L 001	1	24-14198A55	COIL	470UH
L 002	1	24-14198A55	COIL	470UH
L 003	1	24-80369A39	INDUCTOR	330UH
L 004	1	24-80369A39	INDUCTOR	330UH
Q 001	1	48-80368A92	TRANSISTOR	MPS6519 SCREENED
Q 002	1	48-80368A91	TRANSISTOR	MPS6520 SCREENED
Q 003	1	48-80368A91	TRANSISTOR	MPS6520 SCREENED
Q 004	1	48-80368A92	TRANSISTOR	MPS6519 SCREENED
Q 005	1	48-80368A91	TRANSISTOR	MPS6520 SCREENED
R 001	1	6S124A73	RESISTOR	10K-5-1/4
R 002	1	6S124A73	RESISTOR	10K-5-1/4
R 003	1	6S124B06	RESISTOR	220K-5-1/4
R 004	1	6S124A73	RESISTOR	10K-5-1/4
R 005	1	6S124A29	RESISTOR	150-5-1/4
R 006	1	6S124A43	RESISTOR	560-5-1/4
R 007	1	6S124A51	RESISTOR	1.2K-5-1/4
R 008	1	6S124A47	RESISTOR	820-5-1/4
R 009	1	6S124A43	RESISTOR	560-5-1/4
R 010	1	6S124B22	RESISTOR	1M-5-1/4
R 011	1	6S124A97	RESISTOR	100K-5-1/4
R 012	1	6S124A49	RESISTOR	1K-5-1/4
R 013	1	6S124A67	RESISTOR	5.6K-5-1/4
R 014	1	6S124A83	RESISTOR	27K-5-1/4
R 015	1	6S124A77	RESISTOR	15K-5-1/4
R 016	1	6-10621D88	RESISTOR	100K-1-1/8
R 017	1	6-10621D56	RESISTOR	46.4K-1-1/8
R 018	1	6-10621C95	RESISTOR	11K-1-1/8
R 019	1	6-10621C43	RESISTOR	3.16K-1-1/8
R 020	1	6S124A73	RESISTOR	10K-5-1/4
R 021	1	6S124A80	RESISTOR	20K-5-1/4
R 022	1	6S124A65	RESISTOR	4.7K-5-1/4
R 023	1	6S124A73	RESISTOR	10K-5-1/4
R 024	1	6S124A49	RESISTOR	1K-5-1/4
R 025	1	6S124B18	RESISTOR	680K-5-1/4

Figure 12-3. Audio Synthesizer A6 (RTC-4011B) Parts Location Diagram

Find No.	Qty. Req.	Part No.	Nomenclature	Part Value
R 026	1	6S124A97	RESISTOR	100K-5-1/4
R 027	1	6S124A97	RESISTOR	100K-5-1/4
R 028	1	6S124A70	RESISTOR	7.5K-5-1/4
R 029	1	6S124A69	RESISTOR	6.8K-5-1/4
R 030	1	6-10621D48	RESISTOR	38.3K-1-1/8
R 031	1	6-10621B50	RESISTOR	348-1-1/8
R 032	1	6-10621E05	RESISTOR	147K-1-1/8
R 033	1	6S124A62	RESISTOR	3.6K-5-1/4
R 034	1	6S124A53	RESISTOR	1.5K-5-1/4
R 035	1	6S124A65	RESISTOR	4.7K-5-1/4
R 036	1	6S124A69	RESISTOR	6.8K-5-1/4
R 037	1	6S124A53	RESISTOR	1500-5-1/4
R 038	1	6S124A43	RESISTOR	560-5-1/4
R 039	1	6S124A99	RESISTOR	120K-5-1/4
R 040	1	6S124A73	RESISTOR	10K-5-1/4
R 041	1	6S124A91	RESISTOR	56K-5-1/4
R 042	1	6S124A66	RESISTOR	5.1K-5-1/4
R 043	1	6S124A91	RESISTOR	56K-5-1/4
R 045	1	6S124A97	RESISTOR	100K-5-1/4
R 046	1	6S124A25	RESISTOR	100-5-1/4
R 047	1	6S124A25	RESISTOR	100-5-1/4
R 048	1	6S124A73	RESISTOR	10K-5-1/4
R 049	1	6S124A73	RESISTOR	10K-5-1/4
R 050	1	6S124A25	RESISTOR	100-5-1/4
R 051	1	6S124A25	RESISTOR	100-5-1/4
R 052	1	6S124A29	RESISTOR	150-5-1/4
R 053	1	6S124A73	RESISTOR	10K-5-1/4
R 054	1	6S124A73	RESISTOR	10K-5-1/4
R 055	1	6S124A25	RESISTOR	100-5-1/4
R 056	1	6S124A25	RESISTOR	100-5-1/4
R 057	1	6S124A49	RESISTOR	1K-5-1/4
R 058	1	6S124A66	RESISTOR	5.1K-5-1/4
R 059	1	6S124A73	RESISTOR	10K-5-1/4
R 060	1	6S124A73	RESISTOR	10K-5-1/4
R 061	1	6S124B38	RESISTOR	4.7M-5-1/4
R 063	1	6S124A67	RESISTOR	5.6K-5-1/4
R 064	1	6S124A67	RESISTOR	5.6K-5-1/4
R 065	1	6S124A77	RESISTOR	15K-5-1/4
TP001	1	09-80331A88	TEST POINT	
TP002	1	09-80331A88	TEST POINT	
TP003	1	09-80331A88	TEST POINT	
TP004	1	09-80331A88	TEST POINT	
TP005	1	09-80331A88	TEST POINT	
TP006	1	09-80331A88	TEST POINT	
TP007	1	09-80331A88	TEST POINT	
TP008	1	09-80331A88	TEST POINT	
TP009	1	09-80331A88	TEST POINT	
U 001	1	51-80345A04	INTEGRATED CIRCUIT	CA3240E SCREENED
U 002	1	51-80345A04	INTEGRATED CIRCUIT	CA3240E SCREENED
U 003	1	51-80345A20	INTEGRATED CIRCUIT	MC1408P6 SCREENED
U 004	1	51-80368A46	INTEGRATED CIRCUIT	MC14175BCP SCREENED
U 005	1	51-80368A46	INTEGRATED CIRCUIT	MC14175BCP SCREENED
U 006	1	51-80368A26	INTEGRATED CIRCUIT	SN74LS90NS SCREENED
U 007	1	51-80368A11	INTEGRATED CIRCUIT	SN74LS04NS SCREENED
U 008	1	51-80368A64	INTEGRATED CIRCUIT	LM324N SCREENED
U 009	1	51-80368A42	INTEGRATED CIRCUIT	MC14070BCP SCREENED

Find No.	Qty. Req.	Part No.	Nomenclature	Part Value
U 010	1	51-80368A42	INTEGRATED CIRCUIT	MC14070BCP SCREENED
U 011	1	51-80368A02	INTEGRATED CIRCUIT	
U 012	1	51-80368A42	INTEGRATED CIRCUIT	MC14070BCP SCREENED
U 013	1	51-80368A42	INTEGRATED CIRCUIT	MC14070BCP SCREENED
U 014	1	51-80368A46	INTEGRATED CIRCUIT	MC14175BCP SCREENED
U 015	1	51-80368A46	INTEGRATED CIRCUIT	MC14175BCP SCREENED
U 016	1	51-80368A46	INTEGRATED CIRCUIT	MC14175BCP SCREENED
U 017	1	51-80368A46	INTEGRATED CIRCUIT	MC14175BCP SCREENED
U 018	1	51-80368A46	INTEGRATED CIRCUIT	MC14175BCP SCREENED
U 019	1	51-80368A40	INTEGRATED CIRCUIT	MC14066BCP SCREENED
U 020	1	51-80368A30	INTEGRATED CIRCUIT	MC14006BCP SCREENED
U 021	1	51-80368A64	INTEGRATED CIRCUIT	LM324N SCREENED
U 022	1	51-80368A64	INTEGRATED CIRCUIT	LM324N SCREENED
U 023	1	51-80368A40	INTEGRATED CIRCUIT	MC14066BCP SCREENED
U 024	1	51-80368A40	INTEGRATED CIRCUIT	MC14066BCP SCREENED
U 025	1	51-80368A64	INTEGRATED CIRCUIT	LM324N SCREENED
U 026	1	51-80368A31	INTEGRATED CIRCUIT	MC14008BCP SCREENED
U 027	1	51-80368A31	INTEGRATED CIRCUIT	MC14008BCP SCREENED
U 028	1	51-80368A31	INTEGRATED CIRCUIT	MC14008BCP SCREENED
U 029	1	51-80368A31	INTEGRATED CIRCUIT	MC14008BCP SCREENED
U 030	1	51-80368A31	INTEGRATED CIRCUIT	MC14008BCP SCREENED
U 031	1	51-80345A01	INTEGRATED CIRCUIT	CA3140E SCREENED
U 032	1	51-80368A32	INTEGRATED CIRCUIT	MC14011BCP SCREENED
U 033	1	51-80368A30	INTEGRATED CIRCUIT	MC14006BCP SCREENED
U 034	1	51-80368A32	INTEGRATED CIRCUIT	MC14011BCP SCREENED
U 035	1	51-80345A16	INTEGRATED CIRCUIT	MC14028BCP SCREENED
U 036	1	51-80368A32	INTEGRATED CIRCUIT	MC14011BCP SCREENED
U 037	1	51-80368A58	INTEGRATED CIRCUIT	MC14042B SCREENED
U 038	1	51-80345A04	INTEGRATED CIRCUIT	CA3240E SCREENED
U 039	1	51-80368A58	INTEGRATED CIRCUIT	MC14042B SCREENED
U 040	1	51-80368A58	INTEGRATED CIRCUIT	MC14042B SCREENED
U 041	1	51-80368A58	INTEGRATED CIRCUIT	MC14042B SCREENED
U 042	1	51-80368A58	INTEGRATED CIRCUIT	MC14042B SCREENED
U 043	1	51-80368A58	INTEGRATED CIRCUIT	MC14042B SCREENED
U 044	1	51-80368A58	INTEGRATED CIRCUIT	MC14042B SCREENED
U 045	1	1-80714B64	INTEGRATED CIRCUIT	
U 046	1	51-80345A04	INTEGRATED CIRCUIT	CA3240E SCREENED
U 047	1	51-80345A04	INTEGRATED CIRCUIT	CA3240E SCREENED
Y 001	1	48-80346A07	CRYSTAL	1.048576MHZ

Figure 12-3. Audio Synthesizer A6 (RTC-4011B)
Parts Location Diagram

SECTION 13

PROCESSOR I/O MODULE (A7)

13-1. General. Frequency Counter and DVM functions with their processor interface as well as the processor interface for the two system control buses are contained on this module. Additionally, circuitry to complete the 10.245 MHz phase locked loop, and to zero beat the incoming carrier are also on this board. A block diagram of the processor I/O module is shown in figure 13-1 with its schematic shown in figure 13-2.

13-2. 10.245 MHz Phase Locked Loop. Only part of the circuitry for the second local oscillator loop is contained on this module. The 10.245 MHz VCO and the loop filter are on the received module. A sample of the 10.245 MHz second local oscillator is mixed with the SYNTH 10 MHz signal. A divide by fourty nine following the mixer divides the 245 kHz signal from the mixer to 5 kHz. A phase comparison between the 5 kHz from the divider and the SYNTH 5 kHz signal results in the 10.245 MHz VCO TV signal. The VCO TV signal is an error signal which is filtered by the loop filter on the receiver to correct the VCO frequency and maintain phase lock.

13-3. System Control Bus Interface. Interface between the processor buses and the system is through Peripheral Interface Adapters (PIA). The PIA is a single integrated circuit that provides 18 input/output latches which may either be read from or written into by the processor. Two additional inputs on the PIA provide for processor interrupt capability. The two system control buses utilize a single PIA.

13-4. Each system control bus consists of eight lines split into four data lines and four address lines. The address lines define the particular latch into which the data is to be stored, or the buffer from which data is to be obtained. One additional address line, the bus enable line, is required to enable the address decoding circuitry. Thus each control bus can have as many latches at one address as there are bus enable lines. The system utilizes one RF bus enable and two AF bus enables for a total control bus capability of 192 bits. The second bus enable for the AF control bus is on the processor card.

13-5. For internal timing on tone sequences, the processor is interrupted every 10 msec. When interrupted by the timing input the processor stops it current process, acknowledges the interrupt, increments its time counter and then combines as normal. The timing interrupt is the SYNTH 100 Hz input to the Bus PIA.

13-6. DVM. Inputs on the DVM to A/D signal line are digitized into a 10-bit digital word plus a sign bit and then input to the processor through the DVM PIA. An Absolute Value circuit converts the ±1 volt bipolar input signal to a 0-1 volt unipolar positive level with a separate digital output to indicate the sign of the input. An Analog to Digital Converter (A/D) converts the unipolar input into a 10-bit word under processor command. A pulse on the START line from the processor starts the A/D. When conversion is complete the A/D signals the processor on the END line. The processor in turn enables the output drivers on the A/D, sets the DVM/CNTR Buffer to the DVM mode, and inputs the 10bit word plus the signal bit.

13-7. For AC measurements a filter is switched on in the Absolute Value circuit so that its output is a DC level proportional to the average value of the input sinewave. Conversion to RMS is made in the processor by multiplying the average level by 1.11 to obtain the RMS level.

13-8. Frequency Counter. Three possible signal sources are available to the frequency counter for frequency determination. For external inputs the EXT FREQ CTR line from the Front Panel Interface module provides the input. Determination of the duplex frequency is accomplished by measuring the frequency of the offset oscillator on the OFFSET FREQ line. Monitor frequency error is determined from the IF/BFO FREQ line by comparing that frequency to 455 kHz. The desired signal is selected to the counter control by the Select Switch under processor control.

13-9. The Counter Control circuitry responds to a START pulse from the processor to gate the output of the Select Switch to the Accumulator for a time period determined by the Gate Time Generator. When the gate time has ended, or if the accumulator overflows, the Counter Control signals the processor on the END line that the count is complete. The processor in turn disables the A/D output drivers, switches the DVM/CNTR Buffer to the counter mode, and inputs the 16-bit accumulator information.

13-10. Gate times from 0.001 sec to 10 sec are generated by the Gate Time Generator. The SYNTH 1 kHz signal is the reference input for the generator. Selection of the gate time is by processor control to give a five digit or 0.1 Hz resolution frequency display.

13-11. Zero Beat. A zero beat with the incoming carrier is obtained by successively mixing the 455 kHz IF/BFO FREQ with 500 kHz, 50 kHz, and 5 kHz. The beat signal that results from the mixing drives the ground return circuit for the signal presence indicator.

13-12. Module Control. Control of this module is from the processor on the AF control bus. A four bit address (AF ADRS BUS 0-3) is decoded by the Address Decode circuitry to determine which Control Latch the control data is to be stored. The four data bits (AF DATA BUS 0-3) are then stored into the selected Control-Latch by a pulse on the AF BUS EN 2 signal line.

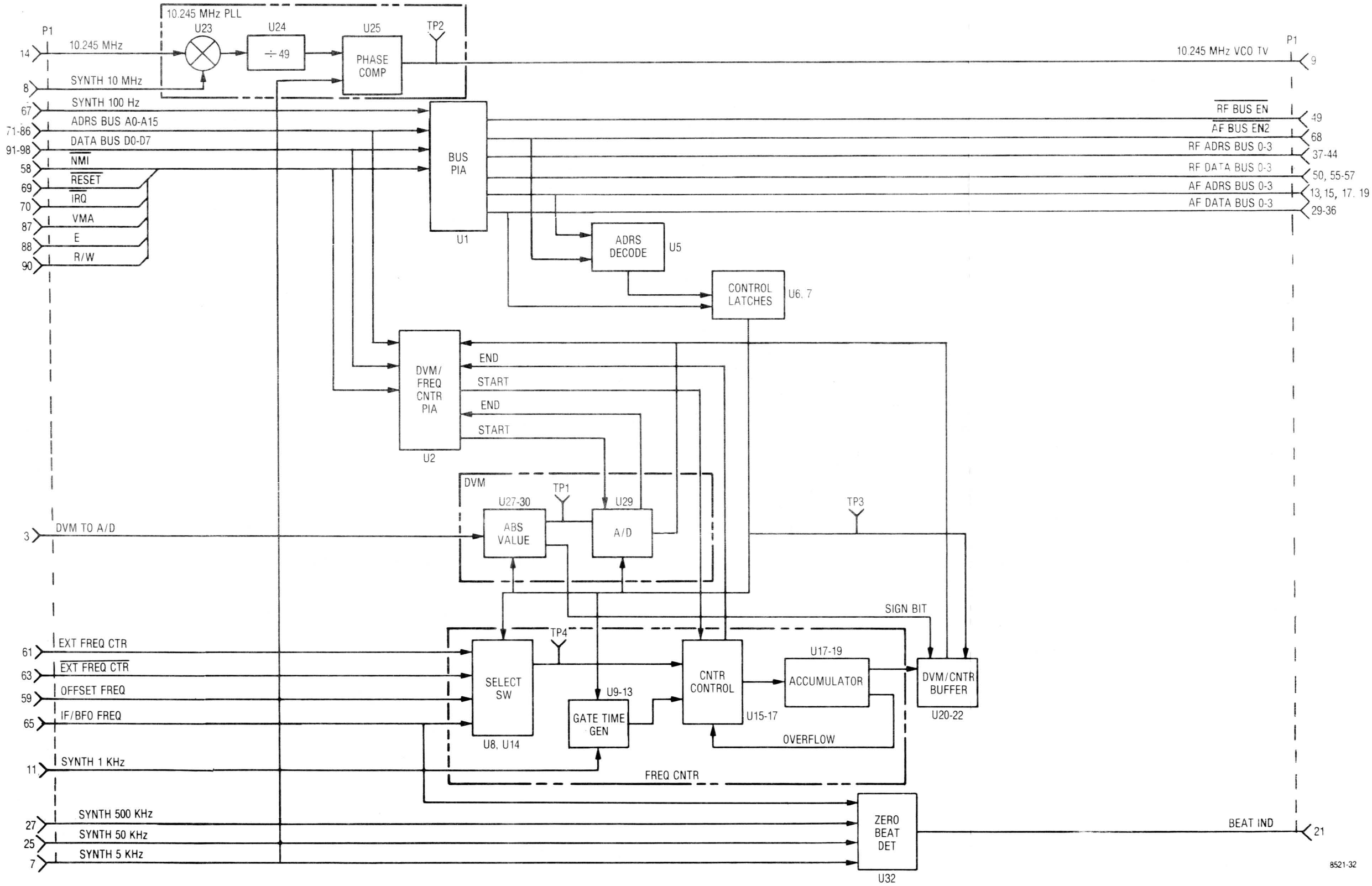

Figure 13-1. Processor I/O A7 Block Diagram

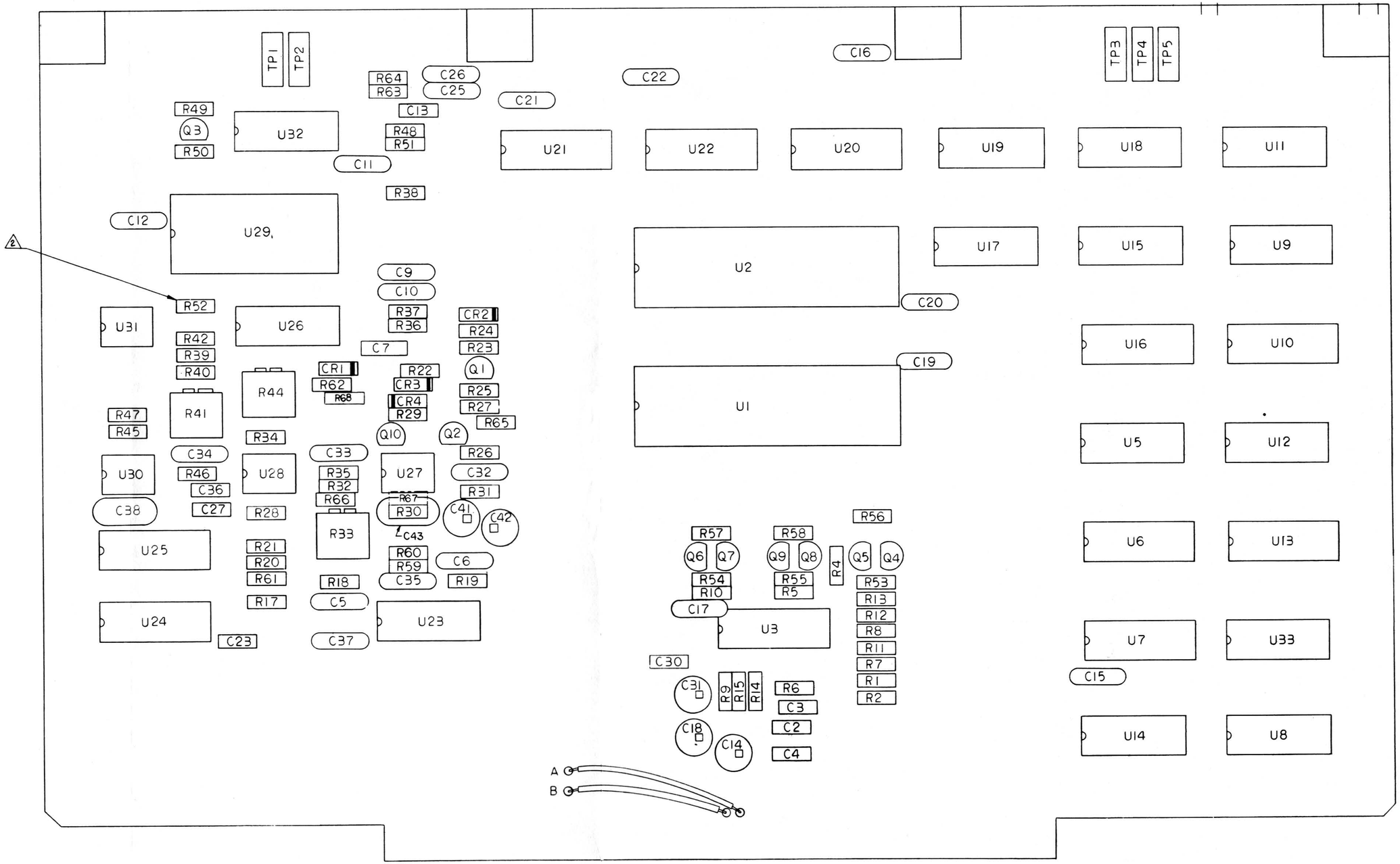

NOTES:

1. R67 AND R68 MAY BE SELECTED AT TEST. EITHER MAY BE USED BUT NOT AT SAME TIME.

2. R52 MAY BE A SELECT IN TEST PART INSTALL NOMINAL VALUE.

Figure 13-3. Processor I/O A7 (RTC-4012B)
Parts Location Diagram

NOTES:

1. PARTIAL REFERENCE DESIGNATIONS ARE SHOWN. FOR COMPLETE DESIGNATION PREFIX WITH A7.
2. FOR REFERENCE DRAWINGS REFER TO: 01-P00405N ASSEMBLY.
3. UNLESS OTHERWISE SPECIFIED: ALL RESISTORS ARE IN OHMS, ± 5 PCT, 1/4 WATT. ALL CAPACITORS ARE IN UF. ALL VOLTAGES ARE DC.
4. DEVICE TYPE AND CONNECTIONS NOT SHOWN ON SYMBOLS ARE LISTED IN TABLE 1.
5. R67 OR R68 MAY BE SELECTED IN TEST. NOMINAL VALUE: NOT USED. EITHER R67 OR R68 MAY BE USED BUT NOT BOTH AT THE SAME TIME. VALUES: 2.2M, 4.7M.
6. R52 MAY BE A SELECT IN TEST PART INSTALL NOMINAL VALUE.

TABLE 1

REF DES	DEVICE TYPE	GND	+5V	-5V	+12V	-12V	NO CONN
U1	MC6821	1	20				
U2	MC6821	1	20				
U3	MC10116	8	1,16				
U5	MC14073	7	14				
U6	MC14042	8	16				
U7	MC14042	8	16				
U8	74LS00	7	14				
U9	MC14518	8	16				
U10	MC14518	8	16				
U11	MC14081	7	14				
U12	MC14081	7	14				
U13	MC14512	8	16				
U14	74LS00	7	14				
U15	74LS74	7	14				
U16	MC14027	8	16				9,14
U17	74LS11	7	14				
U18	74LS197	7	14				
U19	MC14040	8	16				
U20	MC14503	8	16				
U21	MC14503	8	16				
U22	MC14503	8	16				
U23	74LS86	7	14				
U24	MC14569	8	16				
U25	MC14046	8	16				
U26	MC14016		14	7			
U27	LM308A				7	4	5
U28	LM308A				7	4	5
U29	8704	20	19	18			1,2
U30	LM308A					4	5
U31	MC1403						4 THRU 8
U32	MC14070	7	14				
U33	MC14069	7	14				

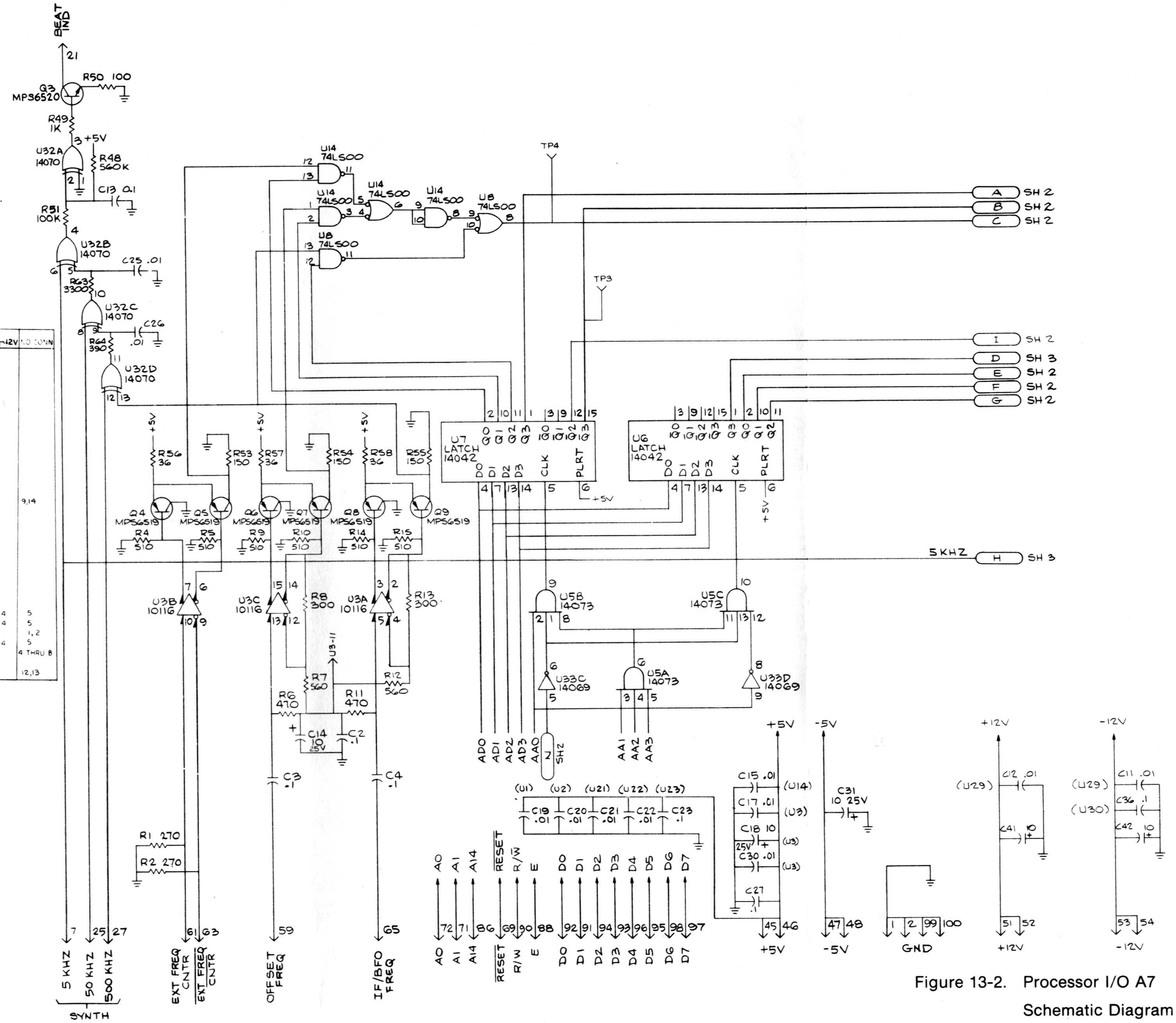

Figure 13-2. Processor I/O A7 Schematic Diagram (Sheet 1 of 3)

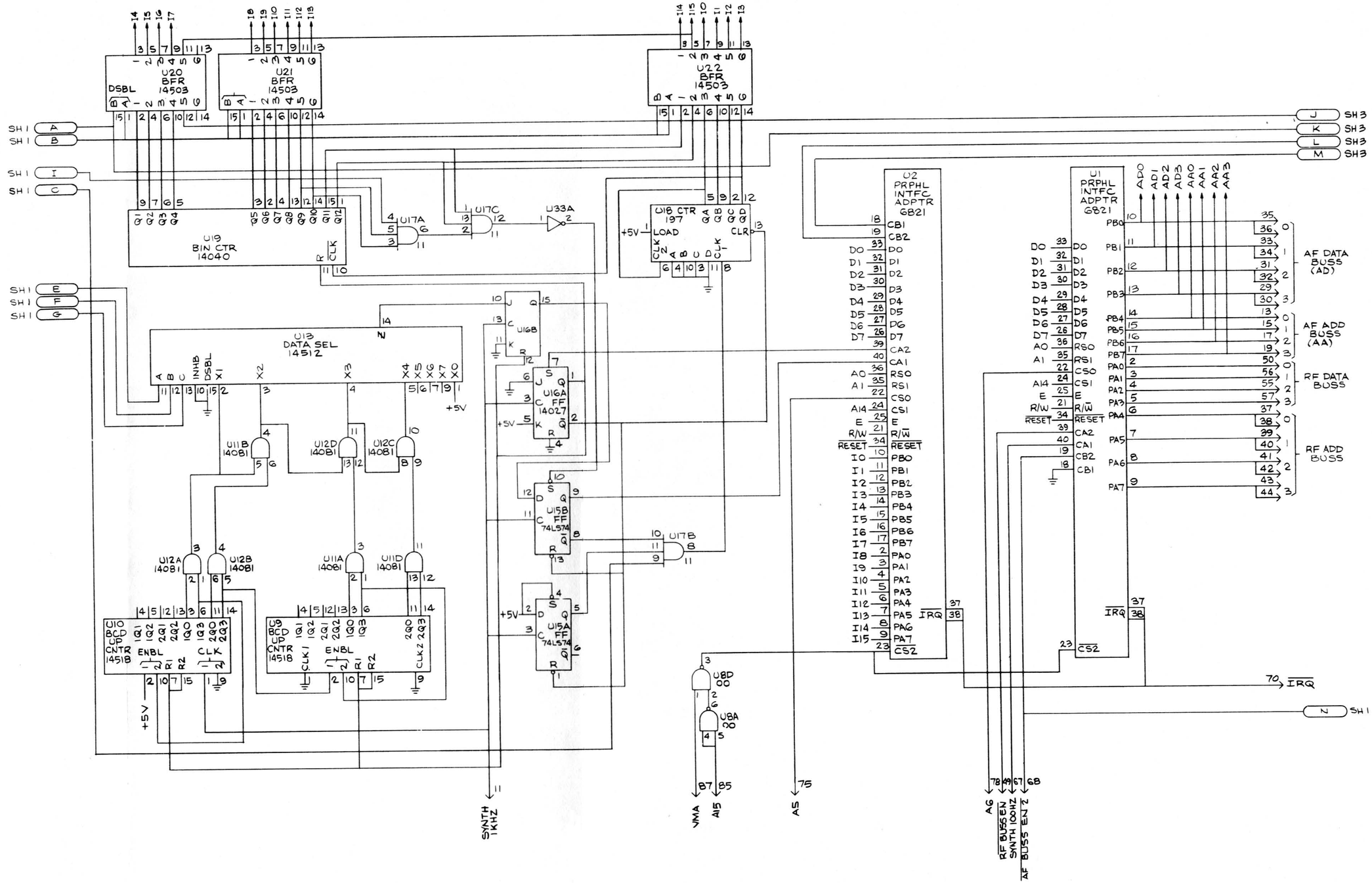

Figure 13-2. Processor I/O A7
Schematic Diagram
(Sheet 2 of 3)

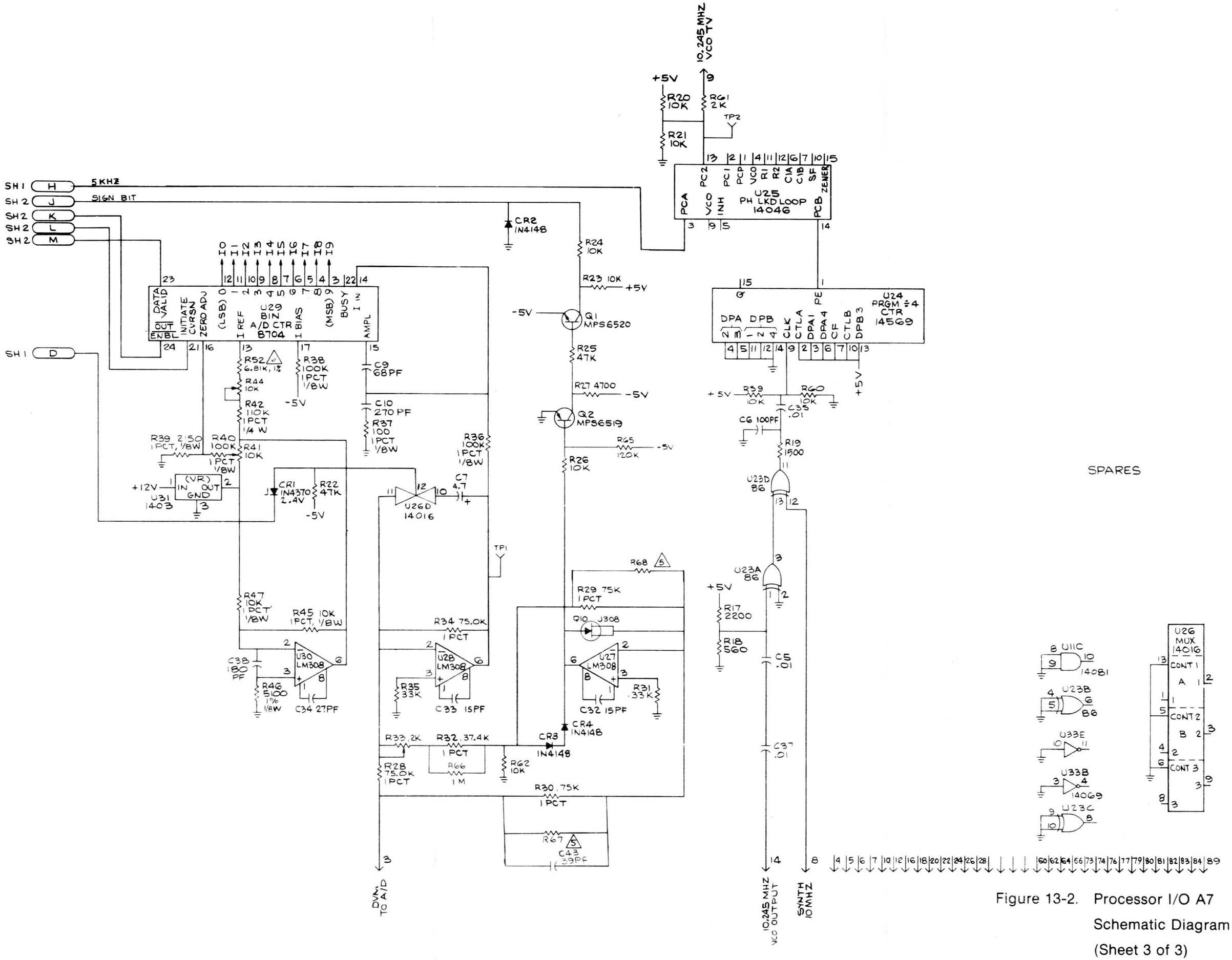

Figure 13-2. Processor I/O A7 Schematic Diagram (Sheet 3 of 3)

Find No.	Qty. Req.	Part No.	Nomenclature	Part Value
		RTC-4012B	PROCESSOR I/O	
001	1	84-80335A10	PWB, PROCESSOR I/0	
003	AR	SN63WRP3	SOLDER	
004	AR	11-14167A01	INK	BLACK
005	1	7-80335A63	BRACKET,PWB MTG	
006	4	MS20470AD4-5	RIVET	1/8X.312
007	2	5C84500B03	EYELET	
008	2	42C84284B01	RETAINER	
009	2	MS35206-214	SCREW,PH	4-40X.312
010	AR		WIRE,INSULATED	26 WHITE
C 002	1	21-80369A82	CAPACITOR	.1UF-20-100
C 003	1	21-80369A82	CAPACITOR	.1UF-20-100
C 004	1	21-80369A82	CAPACITOR	.1UF-20-100
C 005	1	21D82428B59	CAPACITOR	.01UF-2080-200
C 006	1	21D84494B04	CAPACITOR	100PF-5-500
C 007	1	23D83441B18	CAPACITOR	4.7UF-20-20
C 009	1	21D84494B34	CAPACITOR	68PF-5-500
C 010	1	21D82187B04	CAPACITOR	270PF-10-500
C 011	1	21D82428B59	CAPACITOR	.01UF-2080-200
C 012	1	21D82428B59	CAPACITOR	.01UF-2080-200
C 013	1	21-80369A82	CAPACITOR	.1UF-20-100
C 014	1	23D84665F01	CAPACITOR	10UF-25V
C 015	1	21D82428B59	CAPACITOR	.01UF-2080-200
C 016	1	21D82428B59	CAPACITOR	.01UF-2080-200
C 017	1	21D82428B59	CAPACITOR	.01UF-2080-200
C 018	1	23D84665F01	CAPACITOR	10UF-25V
C 019	1	21D82428B59	CAPACITOR	.01UF-2080-200
C 020	1	21D82428B59	CAPACITOR	.01UF-2080-200
C 021	1	21D82428B59	CAPACITOR	.01UF-2080-200
C 022	1	21D82428B59	CAPACITOR	.01UF-2080-200
C 023	1	21-80369A82	CAPACITOR	.1UF-20-100
C 025	1	21D82428B59	CAPACITOR	.01UF-2080-200
C 026	1	21D82428B59	CAPACITOR	.01UF-2080-200
C 027	1	21-80369A82	CAPACITOR	.1UF-20-100
C 030	1	21-80369A82	CAPACITOR	.1UF-20-100
C 031	1	23D84665F01	CAPACITOR	10UF-25V
C 032	1	21D84494B38	CAPACITOR	15PF-5-500
C 033	1	21D84494B38	CAPACITOR	15PF-5-500
C 034	1	21D84494B42	CAPACITOR	27PF-5-500
C 035	1	21D82428B59	CAPACITOR	.01UF-2080-200
C 036	1	21-80369A82	CAPACITOR	.1UF-20-100
C 037	1	21D82428B59	CAPACITOR	.01UF-2080-200
C 038	1	21D84494B46	CAPACITOR	180PF-3-500
C 041	1	23D84665F01	CAPACITOR	10UF-25V
C 042	1	23D84665F01	CAPACITOR	10UF-25V
C 043	1	21D84494B24	CAPACITOR	39PF-5-500
CR001	1	48-83819K44	DIODE, ZENER	2.4V-10-.4
CR002	1	48-84463K02	DIODE	
CR003	1	48-84463K02	DIODE	
CR004	1	48-84463K02	DIODE	
J 001	1	09-80331A88	JACK,TIP	WHITE
J 002	1	09-80331A88	JACK,TIP	WHITE
J 003	1	09-80331A88	JACK,TIP	WHITE
J 004	1	09-80331A88	JACK,TIP	WHITE
J 005	1	09-80331A88	JACK,TIP	WHITE

Find No.	Qty. Req.	Part No.	Nomenclature	Part Value
Q 001	1	48-80368A91	TRANSISTOR	MPS6520 SCREENED
Q 002	1	48-80368A92	TRANSISTOR	MPS6519 SCREENED
Q 003	1	48-80368A91	TRANSISTOR	MPS6520 SCREENED
Q 004	1	48-80368A92	TRANSISTOR	MPS6519 SCREENED
Q 005	1	48-80368A92	TRANSISTOR	MPS6519 SCREENED
Q 006	1	48-80368A92	TRANSISTOR	MPS6519 SCREENED
Q 007	1	48-80368A92	TRANSISTOR	MPS6519 SCREENED
Q 008	1	48-80368A92	TRANSISTOR	MPS6519 SCREENED
Q 009	1	48-80368A92	TRANSISTOR	MPS6519 SCREENED
Q 010	1	48-80345A41	TRANSISTOR	
R 001	1	6S124A35	RESISTOR	270-5-1/4
R 002	1	6S124A35	RESISTOR	270-5-1/4
R 004	1	6S124A42	RESISTOR	510-5-1/4
R 005	1	6S124A42	RESISTOR	510-5-1/4
R 006	1	6S124A41	RESISTOR	470-5-1/4
R 007	1	6S124A43	RESISTOR	560-5-1/4
R 008	1	6S124A36	RESISTOR	300-5-1/4
R 009	1	6S124A42	RESISTOR	510-5-1/4
R 010	1	6S124A42	RESISTOR	510-5-1/4
R 011	1	6S124A41	RESISTOR	470-5-1/4
R 012	1	6S124A43	RESISTOR	560-5-1/4
R 013	1	6S124A36	RESISTOR	300-5-1/4
R 014	1	6S124A42	RESISTOR	510-5-1/4
R 015	1	6S124A42	RESISTOR	510-5-1/4
R 017	1	6S124A57	RESISTOR	2.2K-5-1/4
R 018	1	6S124A43	RESISTOR	560-5-1/4
R 019	1	6S124A53	RESISTOR	1.5K-5-1/4
R 020	1	6S124A73	RESISTOR	10K-5-1/4
R 021	1	6S124A73	RESISTOR	10K-5-1/4
R 022	1	6S124A89	RESISTOR	47K-5-1/4
R 023	1	6S124A73	RESISTOR	10K-5-1/4
R 024	1	6S124A73	RESISTOR	10K-5-1/4
R 025	1	6S124A89	RESISTOR	47K-5-1/4
R 026	1	6S124A73	RESISTOR	10K-5-1/4
R 027	1	6S124A65	RESISTOR	4.7K-5-1/4
R 028	1	06D83175C72	RESISTOR	75K-1-1/4
R 029	1	06D83175C72	RESISTOR	75K-1-1/4
R 030	1	06D83175C72	RESISTOR	75K-1-1/4
R 031	1	6S124A85	RESISTOR	33K-5-1/4
R 032	1	06D83175C51	RESISTOR	37.4K-1-1/4
R 033	1	18D83452F01	RESISTOR,VARIABLE	2K
R 034	1	06D83175C72	RESISTOR	75K-1-1/4
R 035	1	6S124A85	RESISTOR	33K-5-1/4
R 036	1	6-10621D88	RESISTOR	100K-1-1/8
R 037	1	6-10621A97	RESISTOR	100-1-1/8
R 038	1	6-10621D88	RESISTOR	100K-1-1/8
R 039	1	6-10621C27	RESISTOR	2150-1-1/8
R 040	1	6-10621D88	RESISTOR	100K-1-1/8
R 041	1	18D83452F13	RESISTOR,VARIABLE	10K
R 042	1	06D84444A75	RESISTOR	110K-1-1/4
R 044	1	18D83452F13	RESISTOR,VARIABLE	10K
R 045	1	6-10621C91	RESISTOR	10K-1-1/8
R 046	1	6-10621C63	RESISTOR	5.11K-1-1/8
R 047	1	6-10621C91	RESISTOR	10K-1-1/8
R 048	1	6S124B16	RESISTOR	560K-5-1/4

Find No.	Qty. Req.	Part No.	Nomenclature	Part Value
R 049	1	6S124A49	RESISTOR	1K-5-1/4
R 050	1	6S124A25	RESISTOR	100-5-1/4
R 051	1	6S124A97	RESISTOR	100K-5-1/4
R 052	1	6-82526F55	RESISTOR	6.81K-1-1/8 NOMINAL
R 052	S01		WIRE,SOLID BUS	26
R 053	1	6S124A29	RESISTOR	150-5-1/4
R 054	1	6S124A29	RESISTOR	150-5-1/4
R 055	1	6S124A29	RESISTOR	150-5-1/4
R 056	1	6S124A14	RESISTOR	36-5-1/4
R 057	1	6S124A14	RESISTOR	36-5-1/4
R 058	1	6S124A14	RESISTOR	36-5-1/4
R 059	1	6S124A73	RESISTOR	10K-5-1/4
R 060	1	6S124A73	RESISTOR	10K-5-1/4
R 061	1	6S124A56	RESISTOR	2.0K-5-1/4
R 062	1	6S124A73	RESISTOR	10K-5-1/4
R 063	1	6S124A61	RESISTOR	3.3K-5-1/4
R 064	1	6S124A39	RESISTOR	390-5-1/4
R 065	1	6S124A99	RESISTOR	120K-5-1/4
R 066	1	6S124B22	RESISTOR	1M-5-1/4
R 067	S01	6S124B38	RESISTOR	4.7M-5-1/4
R 067	S01	6S124B30	RESISTOR	2.2M-5-1/4
R 068	S01	6S124B38	RESISTOR	4.7M-5-1/4
R 068	S01	6S124B30	RESISTOR	2.2M-5-1/4
U 001	1	51-80368A72	INTEGRATED CIRCUIT	MC6821P SCREENED
U 002	1	51-80368A72	INTEGRATED CIRCUIT	MC6821P SCREENED
U 003	1	51-80323A60	INTEGRATED CIRCUIT	MC10116P SCREENED
U 005	1	51-80368A44	INTEGRATED CIRCUIT	MC14073BCP SCREENED
U 006	1	51-80368A58	INTEGRATED CIRCUIT	MC14042B SCREENED
U 007	1	51-80368A58	INTEGRATED CIRCUIT	MC14042B SCREENED
U 008	1	51-80368A09	INTEGRATED CIRCUIT	SN74LS00NS SCREENED
U 009	1	51-80368A50	INTEGRATED CIRCUIT	MC14518BCP SCREENED
U 010	1	51-80368A50	INTEGRATED CIRCUIT	MC14518BCP SCREENED
U 011	1	51-80368A45	INTEGRATED CIRCUIT	MC14081BCP SCREENED
U 012	1	51-80368A45	INTEGRATED CIRCUIT	MC14081BCP SCREENED
U 013	1	51-80368A48	INTEGRATED CIRCUIT	MC14512BCP SCREENED
U 014	1	51-80368A09	INTEGRATED CIRCUIT	SN74LS00NS SCREENED
U 015	1	51-80368A24	INTEGRATED CIRCUIT	SN74LS74NS SCREENED
U 016	1	51-80368A34	INTEGRATED CIRCUIT	MC14027BCP SCREENED
U 017	1	51-80346A56	INTEGRATED CIRCUIT	SN74LS11N SCREENED
U 018	1	51-80368A75	INTEGRATED CIRCUIT	SN74LS197NS SCREENED
U 019	1	51-80368A35	INTEGRATED CIRCUIT	MC14040BCP SCREENED
U 020	1	51-80368A47	INTEGRATED CIRCUIT	MC14503BCP SCREENED
U 021	1	51-80368A47	INTEGRATED CIRCUIT	MC14503BCP SCREENED
U 022	1	51-80368A47	INTEGRATED CIRCUIT	MC14503BCP SCREENED
U 023	1	51-80368A25	INTEGRATED CIRCUIT	SN74LS86NS SCREENED
U 024	1	51-80368A54	INTEGRATED CIRCUIT	MC14569BCP SCREENED
U 025	1	51-80345A19	INTEGRATED CIRCUIT	MC14046BCP SCREENED
U 026	1	51-80345A17	INTEGRATED CIRCUIT	MC14016BCP SCREENED
U 027	1	51-80368A62	INTEGRATED CIRCUIT	LM308AN SCREENED
U 028	1	51-80368A62	INTEGRATED CIRCUIT	LM308AN SCREENED
U 029	1	51-80345A36	INTEGRATED CIRCUIT	
U 030	1	51-80368A62	INTEGRATED CIRCUIT	LM308AN SCREENED
U 031	1	51-80368A66	INTEGRATED CIRCUIT	MC1403U SCREENED
U 032	1	51-80368A42	INTEGRATED CIRCUIT	MC14070BCP SCREENED
U 033	1	51-80368A41	INTEGRATED CIRCUIT	MC14069BCP SCREENED

Figure 13-3. Processor I/O A7 (RTC-4012B)
Parts Location Diagram

SECTION 14

IEEE INTERFACE MODULE (A8)

14-1. General. Remote control of the system is possible using a IEEE-488 bus and the IEEE Interface Module. The Interface Module provides the interface for the 488 bus and provides for processor control of most of the functions normally controlled from the front panel. A block diagram of the IEEE Interface Module is shown in figure 14-1 with its schematic shown in figure 14-2. See section 22 for information on the use of the IEEE Bus for system control.

14-2. IEEE Bus Interface. Bus buffering and interface protocol as defined by the IEEE-488 specification is provided for by the IEEE Bus Interface circuit. The system processor accesses the interface directly through its address, data, and control buses for reading from or writing to the IEEE bus.

14-3. RF Level Control. The RF Level Control circuitry selects between the 5 VDC + AM MOD or the AM MOD + DC REF (I) input for remote or local control respectively. For remote control the 5 VDC + AM MOD input is electronically attenuated to provide the requested RF output level. For local control the attenuator is programmed for unity gain so that the AM MOD + DC REF (I) signal from the front panel RF level potentiometer controls the RF output level.

14-4. For the IEEE control option, a electronically programmable RF step attenuator is installed in the system. Control of the attenuator is then from the processor through the Address Decode and Control Latch circuitry on the Interface Module.

14-5. Modulation Control. Each of the three modulation sources are individually controllable by the IEEE Bus Interface module. For remote control the respective modulation input (INT MOD (I), EXT MOD (I), and 1 kHz SINE) is switched to a programmable attenuator. The system processor selects the level of attenuation necessary to provide the requested level of modulation. For local control the attenuators are programmed for unity gain and the respective modulation signal from the front panel level control (INT MOD RTN (I), EXT MOD RTN (I), and 1 kHz SINE RTN (I)) is selected to the attenuator to provide modulation level control.

14-6. Address Decode and Control Latches. The system processor has direct control over the programmable attenuators on the module with the Address Decode and Control Latch circuitry. Control data on the data bus (D0-D7) is latched at the Control Latch indicated by the address bus (A0-A15).

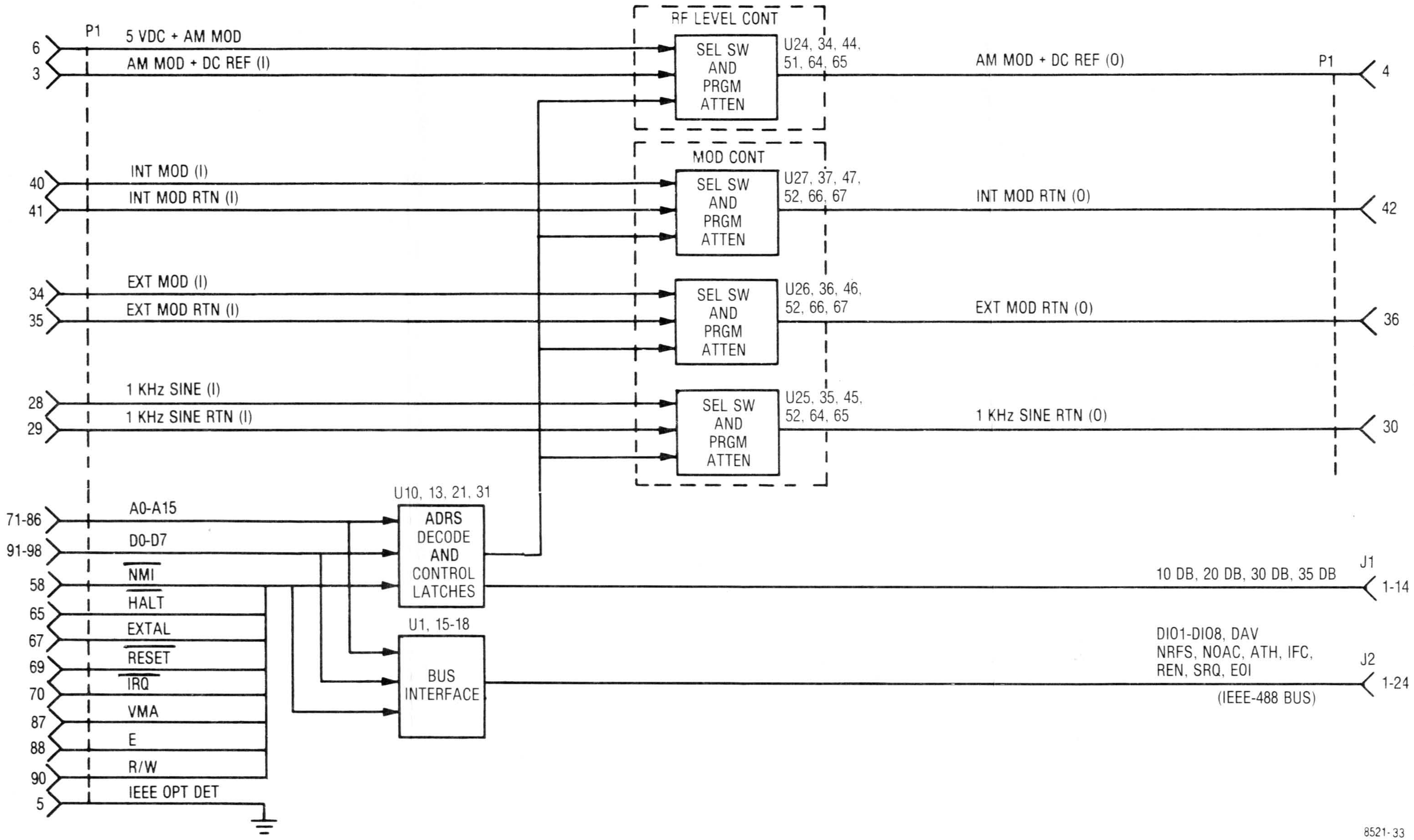

Figure 14-1. IEEE Interface Module A8 Block Diagram

NOTES:

1. PARTIAL REFERENCE DESIGNATIONS ARE SHOWN. FOR COMPLETE DESIGNATION PREFIX WITH A8
2. FOR REFERENCE DRAWINGS REFER TO: 8H-F0010SW
3. UNLESS OTHERWISE SPECIFIED: ALL RESISTORS ARE IN OHMS, ±5 PCT, 1/4 WATT. ALL CAPACITORS ARE IN UF. ALL VOLTAGES ARE DC.

REF DES	TYPE	GND	+5V	-5V	+12V	-12V	+39V	NO CONN
U1	MC68488	1,2,40	20					18,24
U10	UDN6116A	1,8			9			15,16,2
U11	74LS365	8	16					
U12	ZOG-6		7 THRU 12					
U13	74LS138	8	6,16					12,13,7,9,10,11
U14	74LS138	3,8	16					
U15	MC3448	4,8,12	16					
U16	MC3448	4,8,12	16					
U17	MC3448	4,8,12,15	16					
U18	MC3448	1,4,7,8,12	8,16					
U21	MC14174	8	1,16					12,13
U24	MC14174	8	1,16					
U25	MC14174	8	1,16					
U26	MC14174	8	1,16					
U27	MC14174	8	1,16					
U31	MC14174	8	1,16					2,10,12,3,7
U34	MC14174	8	1,16					
U35	MC14174	8	1,16					
U36	MC14174	8	1,16					
U37	MC14174	8	1,16					
U44	AD7531	2,3			16			
U45	AD7531	2,3			16			
U46	AD7531	2,3			16			
U47	AD7531	2,3			16			
U48	74LS11	7	1,16					3,4,5,6
U49	74LS245	10	20					
U51	MC14053	6,8	16	7				1,2,3,4,5,15
U52	MC14053	6,8	16	7				
U53	74LS04	7	14					1,3,5,9,11,12,13
U54	74LS10	7	14					8,9,10,11
U64	CA3240				8	4		
U65	CA3240				8	4		
U66	CA3240				8	4		
U67	CA3240				8	4		

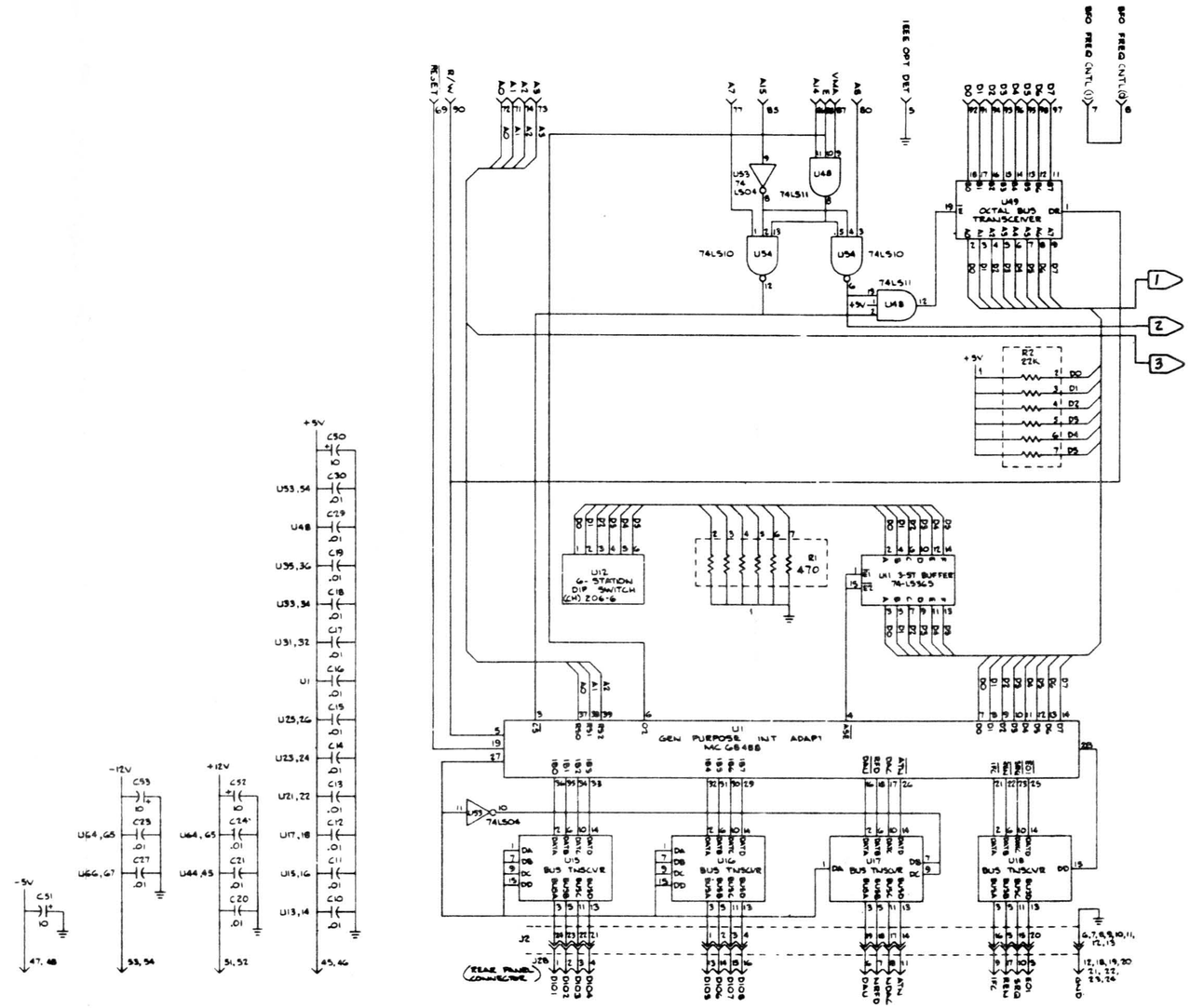

Figure 14-2. IEEE Interface Module A8
Schematic Diagram (Sheet 1 of 2)

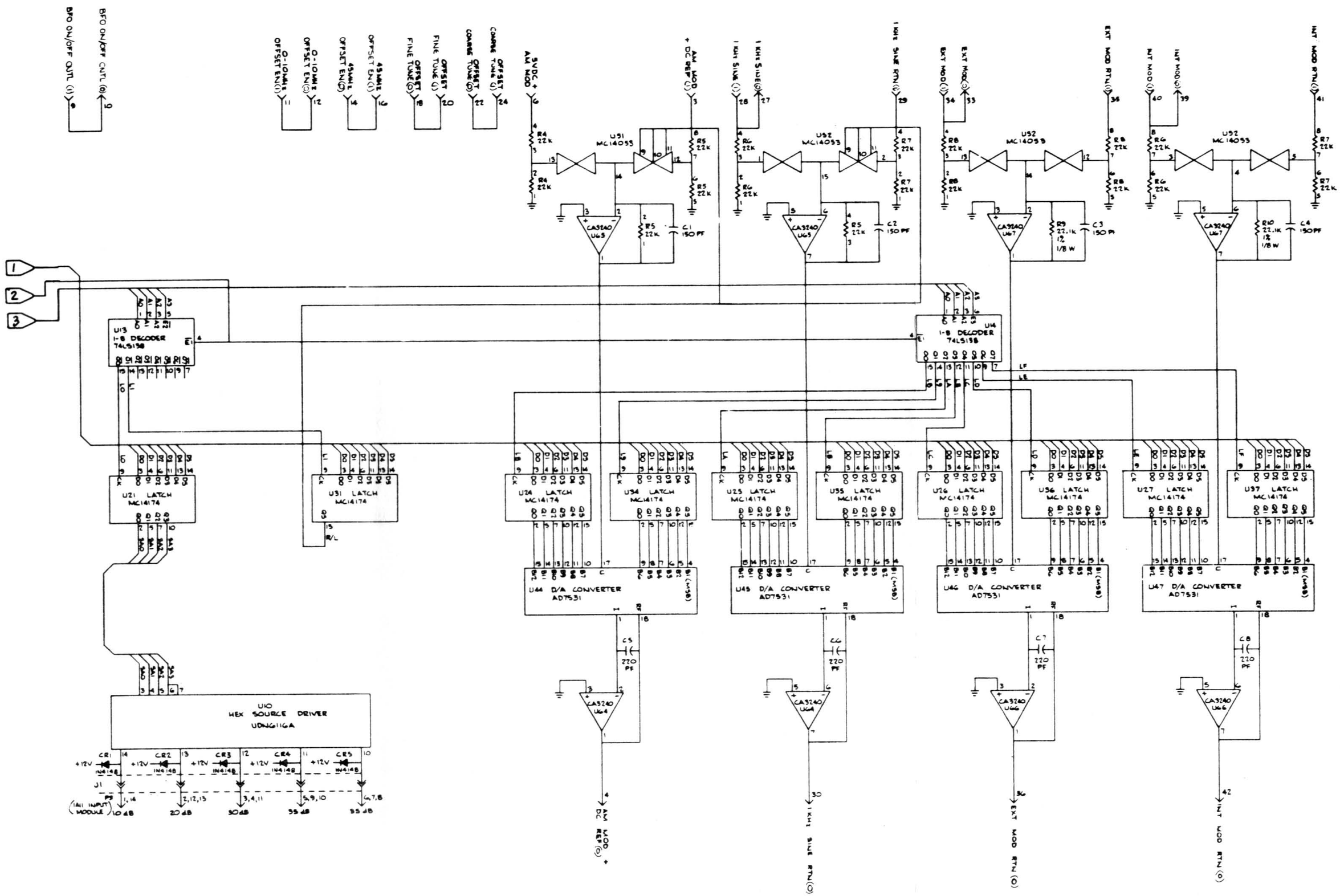

Figure 14-2. IEEE Interface Module A8
Schematic Diagram (Sheet 2 of 2)

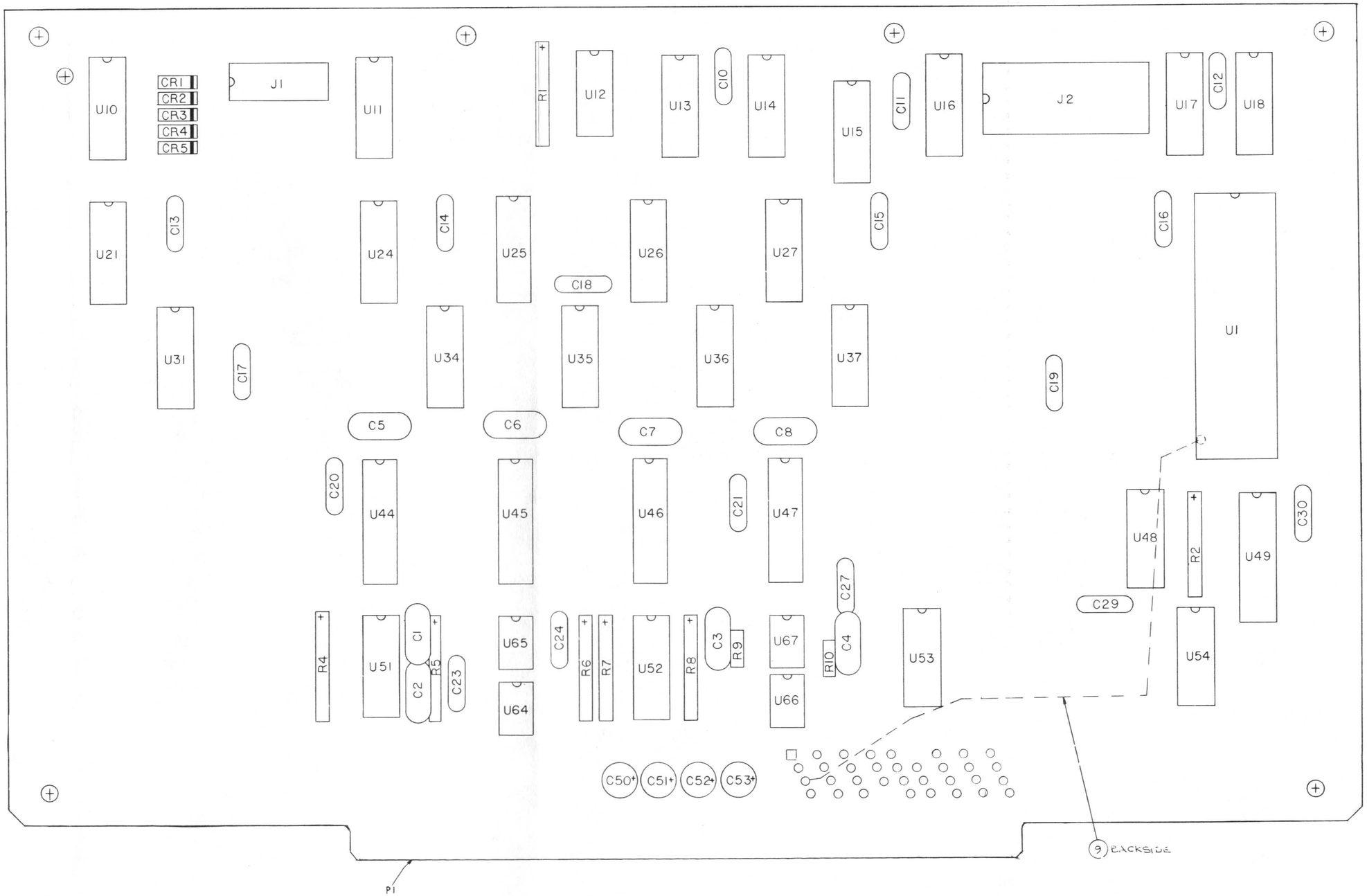

Figure 14-3. IEEE Interface Module A8 (RTC-4013B) Parts Location Diagram

Find No.	Qty. Req.	Part No.	Nomenclature	Part Value
		RTC-4013B	IEEE INTERFACE	
001	1	84-P00204N001	PWB,IEEE INTERFACE	
002	AR	SN63WRMAP3	SOLDER	
003	AR	11-14167A01	INK	BLACK
004	1	7-80335A63	BRACKET,PWB MTG	
005	4	MS20470AD4-5	RIVET	1/8X.312
006	2	5C84500B03	EYELET	
007	2	42C84284B01	RETAINER	
008	2	MS35206-214	SCREW	4-40X.312
009	AR		WIRE	26
C 001	1	21D82187B49	CAPACITOR	150PF-10-500
C 002	1	21D82187B49	CAPACITOR	150PF-10-500
C 003	1	21D82187B49	CAPACITOR	150PF-10-500
C 004	1	21D82187B49	CAPACITOR	150PF-10-500
C 005	1	21D82187B08	CAPACITOR	220PF-10-500
C 006	1	21D82187B08	CAPACITOR	220PF-10-500
C 007	1	21D82187B08	CAPACITOR	220PF-10-500
C 008	1	21D82187B08	CAPACITOR	220PF-10-500
C 010	1	21D82428B59	CAPACITOR	.01UF-2080-200
C 011	1	21D82428B59	CAPACITOR	.01UF-2080-200
C 012	1	21D82428B59	CAPACITOR	.01UF-2080-200
C 013	1	21D82428B59	CAPACITOR	.01UF-2080-200
C 014	1	21D82428B59	CAPACITOR	.01UF-2080-200
C 015	1	21D82428B59	CAPACITOR	.01UF-2080-200
C 016	1	21D82428B59	CAPACITOR	.01UF-2080-200
C 017	1	21D82428B59	CAPACITOR	.01UF-2080-200
C 018	1	21D82428B59	CAPACITOR	.01UF-2080-200
C 019	1	21D82428B59	CAPACITOR	.01UF-2080-200
C 020	1	21D82428B59	CAPACITOR	.01UF-2080-200
C 021	1	21D82428B59	CAPACITOR	.01UF-2080-200
C 023	1	21D82428B59	CAPACITOR	.01UF-2080-200
C 024	1	21D82428B59	CAPACITOR	.01UF-2080-200
C 027	1	21D82428B59	CAPACITOR	.01UF-2080-200
C 029	1	21D82428B59	CAPACITOR	.01UF-2080-200
C 030	1	21D82428B59	CAPACITOR	.01UF-2080-200
C 050	1	23D84665F01	CAPACITOR	10UF-25V
C 051	1	23D84665F01	CAPACITOR	10UF-25V
C 052	1	23D84665F01	CAPACITOR	10UF-25V
C 053	1	23D84665F01	CAPACITOR	10UF-25V
CR001	1	48-84463K02	DIODE	
CR002	1	48-84463K02	DIODE	
CR003	1	48-84463K02	DIODE	
CR004	1	48-84463K02	DIODE	
CR005	1	48-84463K02	DIODE	
J 001	1	09-80313A09	SOCKET	14 PIN
J 002	1	09-80331A86	SOCKET	24 PIN
R 001	1	784-1-R470	RESISTOR NETWORK	HEX SIP,470 OHM
R 002	1	51-80368A77	RESISTOR NETWORK	HEX SIP
R 004	1	51-80368A78	RESISTOR NETWORK	QUAD SIP
R 005	1	51-80368A78	RESISTOR NETWORK	QUAD SIP
R 006	1	51-80368A78	RESISTOR NETWORK	QUAD SIP
R 007	1	51-80368A78	RESISTOR NETWORK	QUAD SIP
R 008	1	51-80368A78	RESISTOR NETWORK	QUAD SIP
R 009	1	6-10621D25	RESISTOR	22.1K-1-1/8
R 010	1	6-10621D25	RESISTOR	22.1K-1-1/8
U 001	1	51-P07943V001	INTEGRATED CIRCUIT	MC68488P SCREENED
U 010	1	51-80346A63	INTEGRATED CIRCUIT	
U 011	1	51-80345A31	INTEGRATED CIRCUIT	SN74LS365N SCREENED
U 012	1	40-80369A07	SWITCH, 6 STATION	
U 013	1	51-80346A57	INTEGRATED CIRCUIT	SN74LS138N SCREENED
U 014	1	51-80346A57	INTEGRATED CIRCUIT	SN74LS138N SCREENED
U 015	1	51-80346A51	INTEGRATED CIRCUIT	MC3448 SCREENED
U 016	1	51-80346A51	INTEGRATED CIRCUIT	MC3448 SCREENED
U 017	1	51-80346A51	INTEGRATED CIRCUIT	MC3448 SCREENED
U 018	1	51-80346A51	INTEGRATED CIRCUIT	MC3448 SCREENED
U 021	1	51-80346A50	INTEGRATED CIRCUIT	MC14174BCP SCREENED
U 024	1	51-80346A50	INTEGRATED CIRCUIT	MC14174BCP SCREENED
U 025	1	51-80346A50	INTEGRATED CIRCUIT	MC14174BCP SCREENED
U 026	1	51-80346A50	INTEGRATED CIRCUIT	MC14174BCP SCREENED
U 027	1	51-80346A50	INTEGRATED CIRCUIT	MC14174BCP SCREENED
U 031	1	51-80346A50	INTEGRATED CIRCUIT	MC14174BCP SCREENED
U 034	1	51-80346A50	INTEGRATED CIRCUIT	MC14174BCP SCREENED
U 035	1	51-80346A50	INTEGRATED CIRCUIT	MC14174BCP SCREENED
U 036	1	51-80346A50	INTEGRATED CIRCUIT	MC14174BCP SCREENED
U 037	1	51-80346A50	INTEGRATED CIRCUIT	MC14174BCP SCREENED
U 044	1	51-80345A98	INTEGRATED CIRCUIT	AD7531JPN SCREENED
U 045	1	51-80345A98	INTEGRATED CIRCUIT	AD7531JPN SCREENED
U 046	1	51-80345A98	INTEGRATED CIRCUIT	AD7531JPN SCREENED
U 047	1	51-80345A98	INTEGRATED CIRCUIT	AD7531JPN SCREENED
U 048	1	51-80346A56	INTEGRATED CIRCUIT	SN74LS11N SCREENED
U 049	1	51-80368A20	INTEGRATED CIRCUIT	SN74LS245NS SCREENED
U 051	1	51-80368A39	INTEGRATED CIRCUIT	MC14053BCP SCREENED
U 052	1	51-80368A39	INTEGRATED CIRCUIT	MC14053BCP SCREENED
U 053	1	51-80368A11	INTEGRATED CIRCUIT	SN74LS04N SCREENED
U 054	1	51-80346A55	INTEGRATED CIRCUIT	SN74LS10N SCREENED
U 064	1	51-80345A04	INTEGRATED CIRCUIT	CA3240E SCREENED
U 065	1	51-80345A04	INTEGRATED CIRCUIT	CA3240E SCREENED
U 066	1	51-80345A04	INTEGRATED CIRCUIT	CA3240E SCREENED
U 067	1	51-80345A04	INTEGRATED CIRCUIT	CA3240E SCREENED

Figure 14-3. IEEE Interface Module A8 (RTC-4013B) Parts Location Diagram

SECTION 15

PROCESSOR MODULE (A9)

15-1. GENERAL. The processor module provides primary control and data manipulations for the system. This module contains a processor and buffer, a program memory (ROM), a nonvolative memory (NVM), a random access memory (RAM), a peripheral interface adapter (PIA), a timing generator, and a character generator. Input and output information is via the peripheral interface adapter and the address, data, and control buses. A block diagram and a schematic diagram of the module is shown in figure 15-1 and figure 15-2, respectively.

15.2 PROCESSOR AND BUFFER. The processor is a Motorola microprocessor MC6802P, operating at a 1 MHz clock rate. This microprocessor controls the processor module via the three signal buses. The address bus provides access to the selected device for data transfers (read/write) from the data bus. Synchronization of the data transfer and specialized processor functions are provided through the control bus.

15-3. PROGRAM MEMORY (ROM). The series of commands (program instructions) that direct microprocessor action are contained in the ROM (Read Only Memory). This ROM is comprised of three 4096 x 8-bit read only memories. An additional 4096 x 8-bit read only memory is provided with the IEEE option.

15-4. NONVOLATILE MEMORY (NVM). The nonvolatile memory provides storage for 84 eight-bit words. Data that is to be held during power off is held in the NVM. When the power is turned on, the microprocessor reads the NVM contents to obtain its start up mode, the RF and tone memory presets, and the remainder of the preset data. If the operator changes a preset, the microprocessor changes the data in the NVM so that the new preset will be remembered.

15-5. RANDOM ACCESS MEMORY (RAM). The random access memory provides temporary storage for both the processor and the CRT alphanumeric display. The RAM has provision to store 1024 eight-bit words, of which 512 are used for the CRT display data. Data is written in a read out of the RAM by the microprocessor.

15-6. PERIPHERAL INTERFACE ADAPTER (PIA). The peripheral interface adapter provides input and output latches for external data from/to the processor module. There are nine inputs from the keyboard, four column inputs (KYBD COL 0-3), and five row inputs (KYBD ROW 0-4). A single input (IEEE OPT DET) signals the processor that the IEEE option is installed. The $\overline{\text{AF BUS EN 1}}$ output signal synchronizes the transfer of data on the system AF control bus.

15-7. TIMING GENERATOR. The timing generator provides the timing signals for the character generator. All of the timing signals are synchronized to the 1 MHz master clock signal from the processor. A x2 multiplier provides a 2 MHz clock to the 8-bit shift register, which in turn provides the dot clock. Additionally, the 2 MHz is successively divided through a divide-by-eight circuit then through a 12-bit binary counter to provide the remaining clock requirements.

15-8. CHARACTER GENERATOR. The character generator sequentially accesses that part of the RAM where character information is stored and causes the respective characters to be displayed on the screen. Since both the character generator and the processor share the same RAM, the two must be synchronized so they access the RAM during alternate half cycles of the master clock. The 1 MHz master clock signal, from the processor is used to synchronize the 2 MHz dot clock.

15-9. Characters are displayed on the CRT as eight-by-eight dot matrices. Thirty-two dot matrices, of which the last two are always blank, make one character line. Sixteen lines, of which the last line is always blank, complete the display area. Therefore, the total number of matrices available for character display is 30 x 15 or 450 matrices. The blank matrices and the blank line is used for horizontal and vertical retrace blanking, respectively. The display is generated by dot rows. As the CRT sweeps the first dot row of a character line, the character generator outputs a serial bit pattern of 1's and 0's that turn the crt intensity on and off. The result is a row of dots that when combined with the next seven rows form a character.

15-10. A select switch, on the data and address buses to the RAM, toggles at the master clock rate of 1 MHz. This results in the processor and the character generator having access to the RAM alternately every other 0.5 microseconds. The processor stores in the RAM an 8-bit word that represents the character to be displayed. The character generator scans the RAM in sequence with the CRT display scan. As each location in the RAM is addressed, the 8-bit word stored at that location is latched by the 8-bit latch. Seven of the bits in the latch are applied to the character ROM, the eighth bit is not used. The timing generator provides 3 bits which indicates which row of dots are being scanned. The 10 bits applied to the character ROM, define a specific dot row of a particular character. An 8-bit pattern, defining that row of the character, is parallel-loaded into the 8-bit shift register. These 8 bits are serially shifted out of the register, at a 2 MHz rate, as the CHAR GEN Z-AXIS output signal.

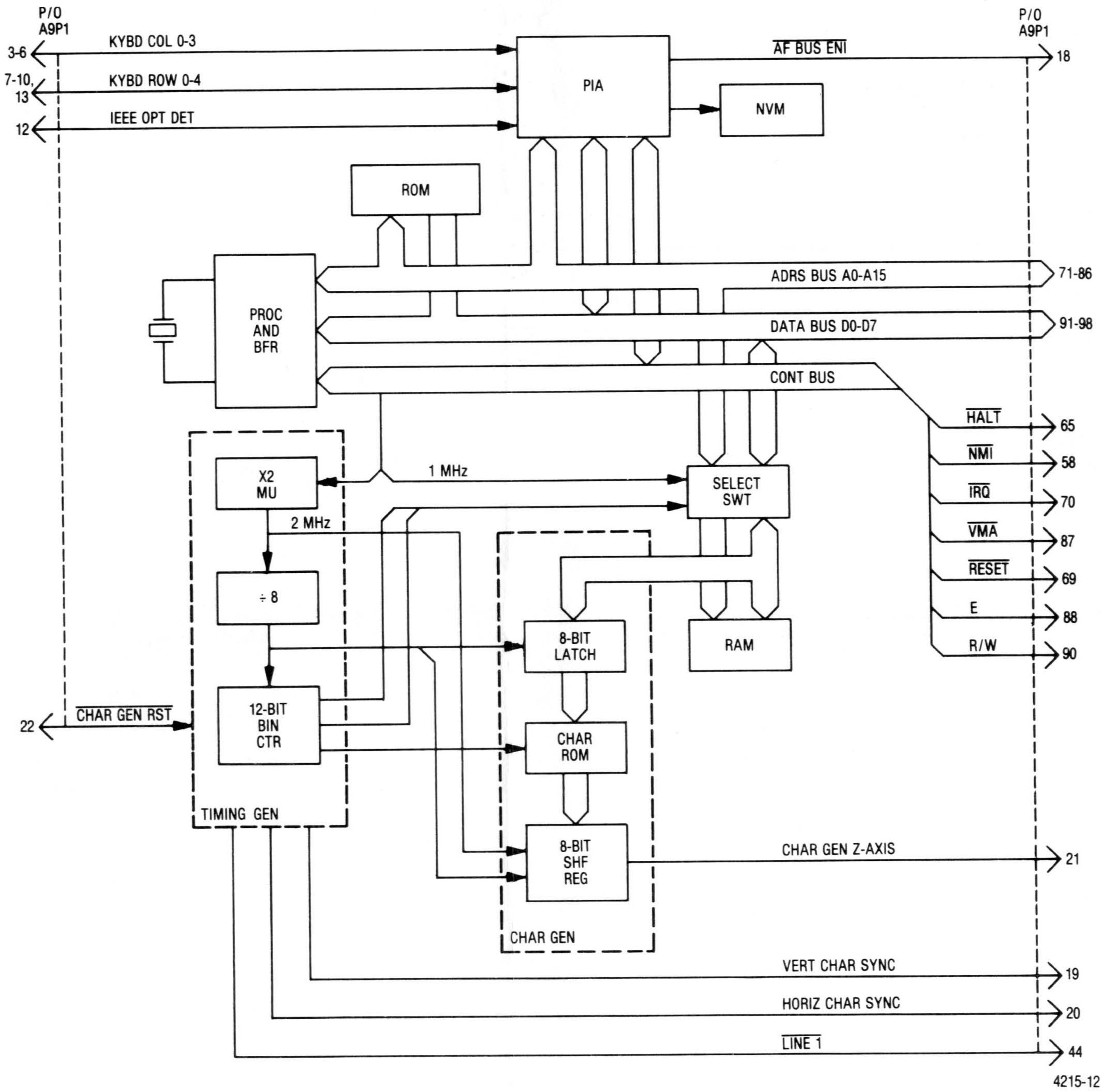

Figure 15-1. Processor Module A9 Block Diagram

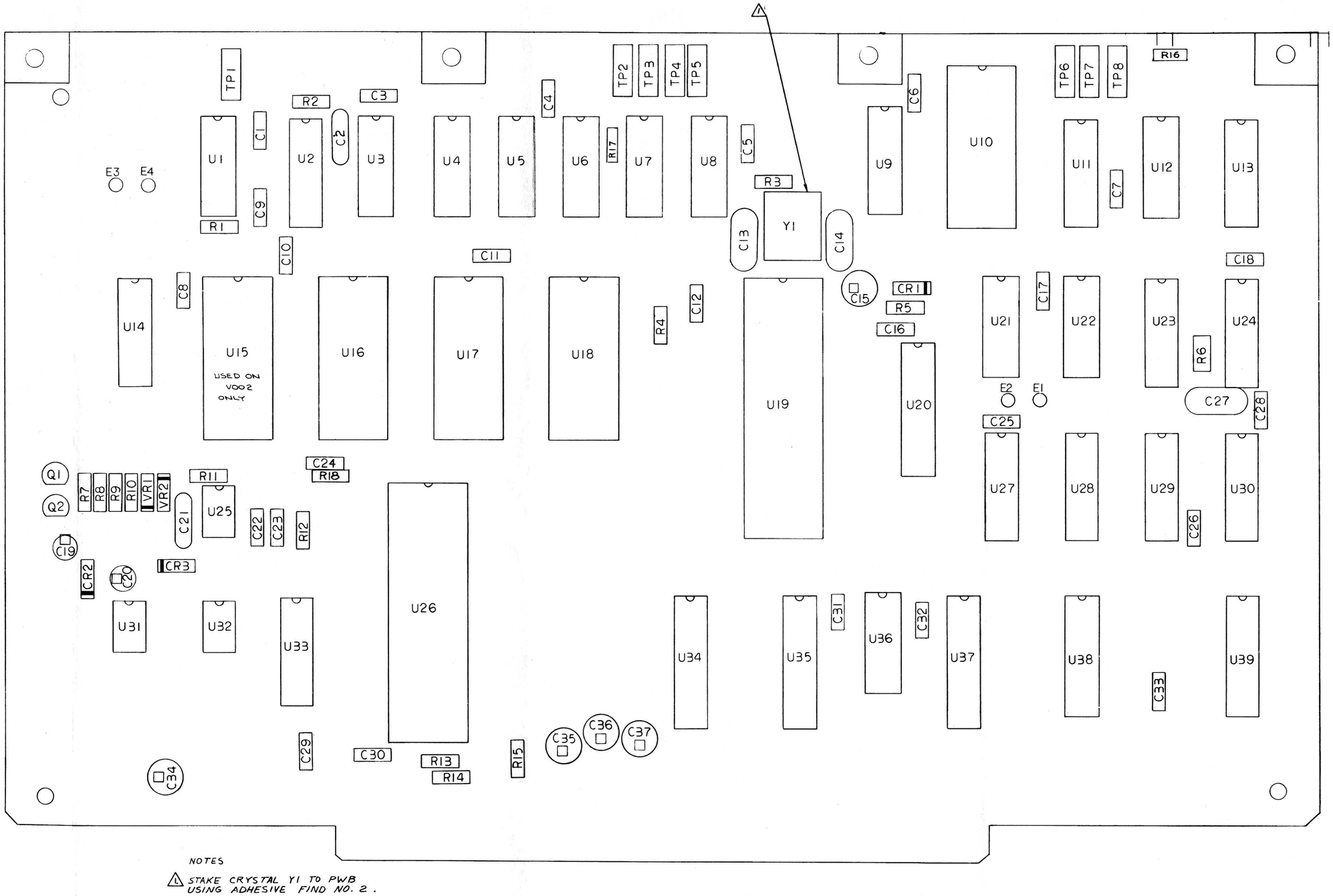

NOTES

1. STAKE CRYSTAL Y1 TO PWB USING ADHESIVE FIND NO. 2.

Figure 15-3. Processor Module A9 (RTC-4019B)
Parts Location Diagram

NOTES:

1. PARTIAL REFERENCE DESIGNATION ARE SHOWN. FOR COMPLETE DESIGNATION PREFIX WITH A9.

2. FOR REFERENCE DRAWINGS REFER TO:

3. UNLESS OTHERWISE SPECIFIED:
   ALL RESISTORS ARE IN OHMS, ±5 PCT, 1/4 WATT.
   ALL CAPACITORS ARE IN UF.
   ALL VOLTAGES ARE DC.

4. DEVICE TYPE AND CONNECTIONS NOT SHOWN ON SYMBOL ARE LISTED IN TABLE 1. UNDERLINED PORTION OF TYPE NUMBER IS USED AS A CODE TO IDENTIFY DEVICES ON DIAGRAM.

5. U15 IS USED FOR IEEE CONFIGURATION ONLY. FOR REFERENCE DRAWING SEE 01-P07894V002. EPROM TSM25L32 MUST BE PROGRAMMED WITH DATA PER IEEE PROGRAM 98-P01316V.

6. R16, R17 AND R18 ARE NOT USED IN MODULES S/N 1-250. THESE RESISTORS ARE USED ONLY IN MODULES USING PRINTED WIRING BOARD 84-P07895V001 REV "C" AND HIGHER.

TABLE 1

REF DES	DEVICE TYPE SEE NOTE 4	GND	VCC PINS CONN	VCC PINS VOLTS	NO CONN
U1	74LS04	7	14	+5V	2,4,6
U2	74LS123	8	16	+5V	5,13
U3	74LS00	7	14	+5V	3
U4	74LS04	7	14	+5V	6
U5	74LS86	7	14	+5V	
U6	74LS00	7	14	+5V	
U7	74LS74	7	14	+5V	
U8	74LS260	7	14	+5V	
U9	74LS166	8	16	+5V	
U10	44562	12	24	+5V	
U11	74LS175	8	16	+5V	3,6,11,14,15
U12	74LS04	7	14	+5V	
U13	74LS175	8	16	+5V	3,6,11,14,15
U14	74LS139	8	16	+5V	9,10,11,12
U15 (5)	TMS25L32	12	24	+5V	
U16	SCM91611	12	24	+5V	
U17	SCM91612	12	24	+5V	
U18	SCM91613	12	24	+5V	
U19	MC6802	1,21	8,35	+5V	7
U20	74LS245	10	20	+5V	
U21	74LS20	7	14	+5V	3,11
U22	74LS393	7	14	+5V	
U23	74LS191	8	16	+5V	13
U24	74LS221	8	16	+5V	3,4, 12-15
U25	MC1455	8			
U26	MC6821	1	20	+5V	
U27	74LS365	8	16	+5V	
U28	74LS365	8	16	+5V	
U29	74LS365	8	16	+5V	13
U30	74LS365	8	16	+5V	13
U31	NC7033		7	+5V	
U32	NC7033		7	+5V	
U33	MC14053	7,8	16	+5V	
U34	74LS244	10	20	+5V	
U35	74LS244	10	20	+5V	
U36	74LS125	7,12	14	+5V	11,13
U37	74LS245	10	20	+5V	
U38	MCM21L14	9	18	+5V	
U39	MCM21L14	9	18	+5V	

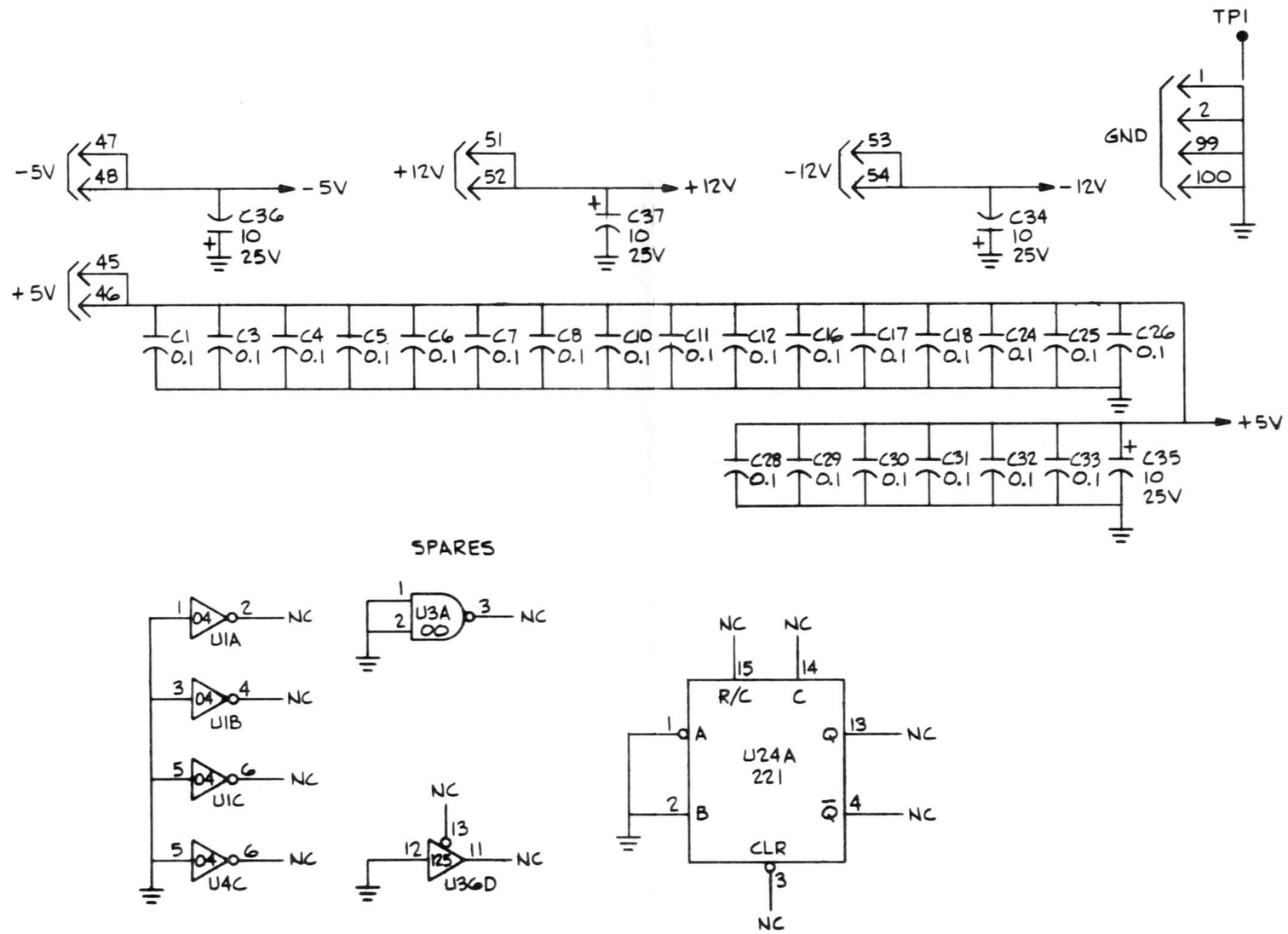

Figure 15-2. Processor Module A9 Schematic Diagram (Sheet 1 of 7)

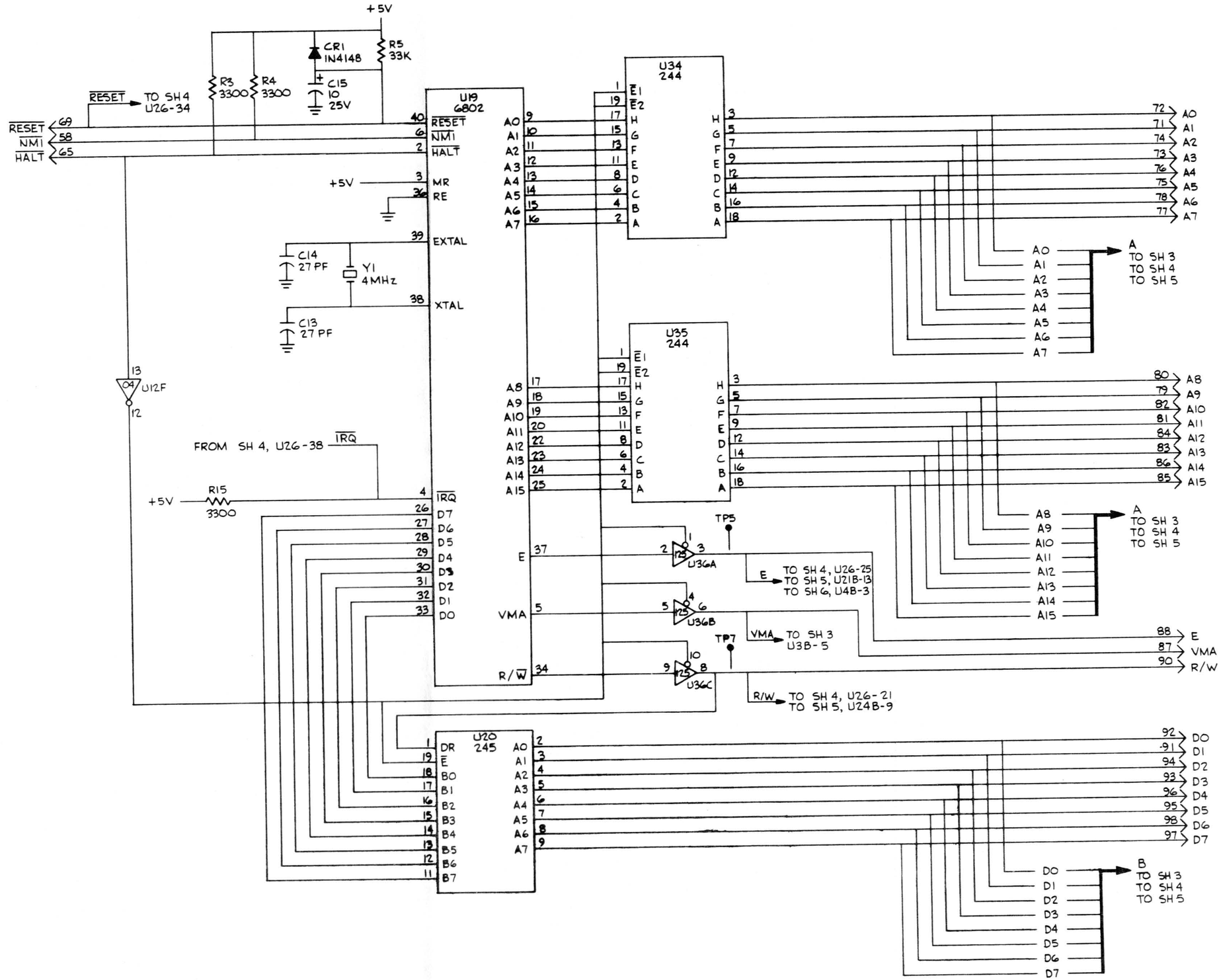

Figure 15-2. Processor Module A9
Schematic Diagram
(Sheet 2 of 7)

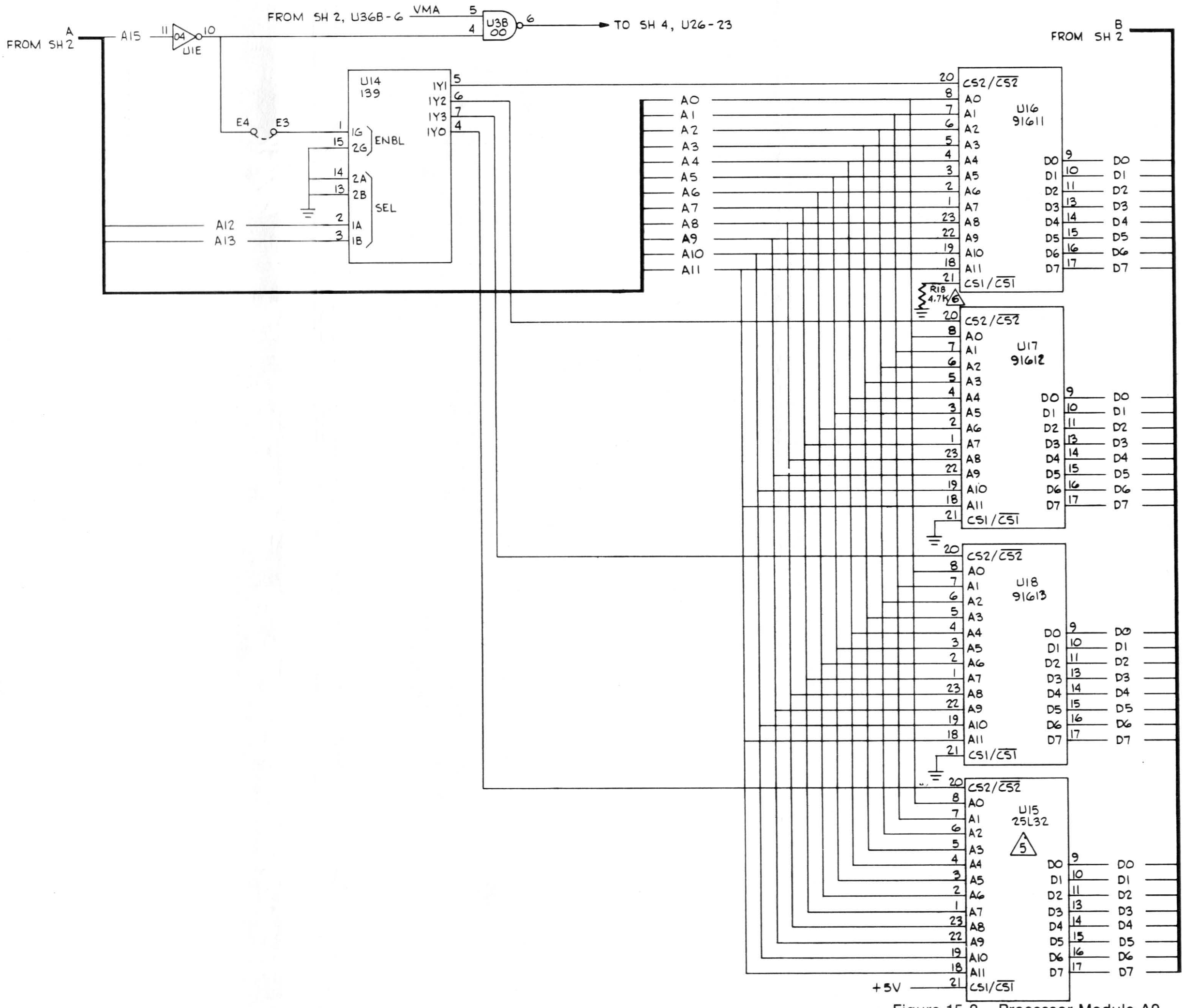

Figure 15-2. Processor Module A9 Schematic Diagram (Sheet 3 of 7)

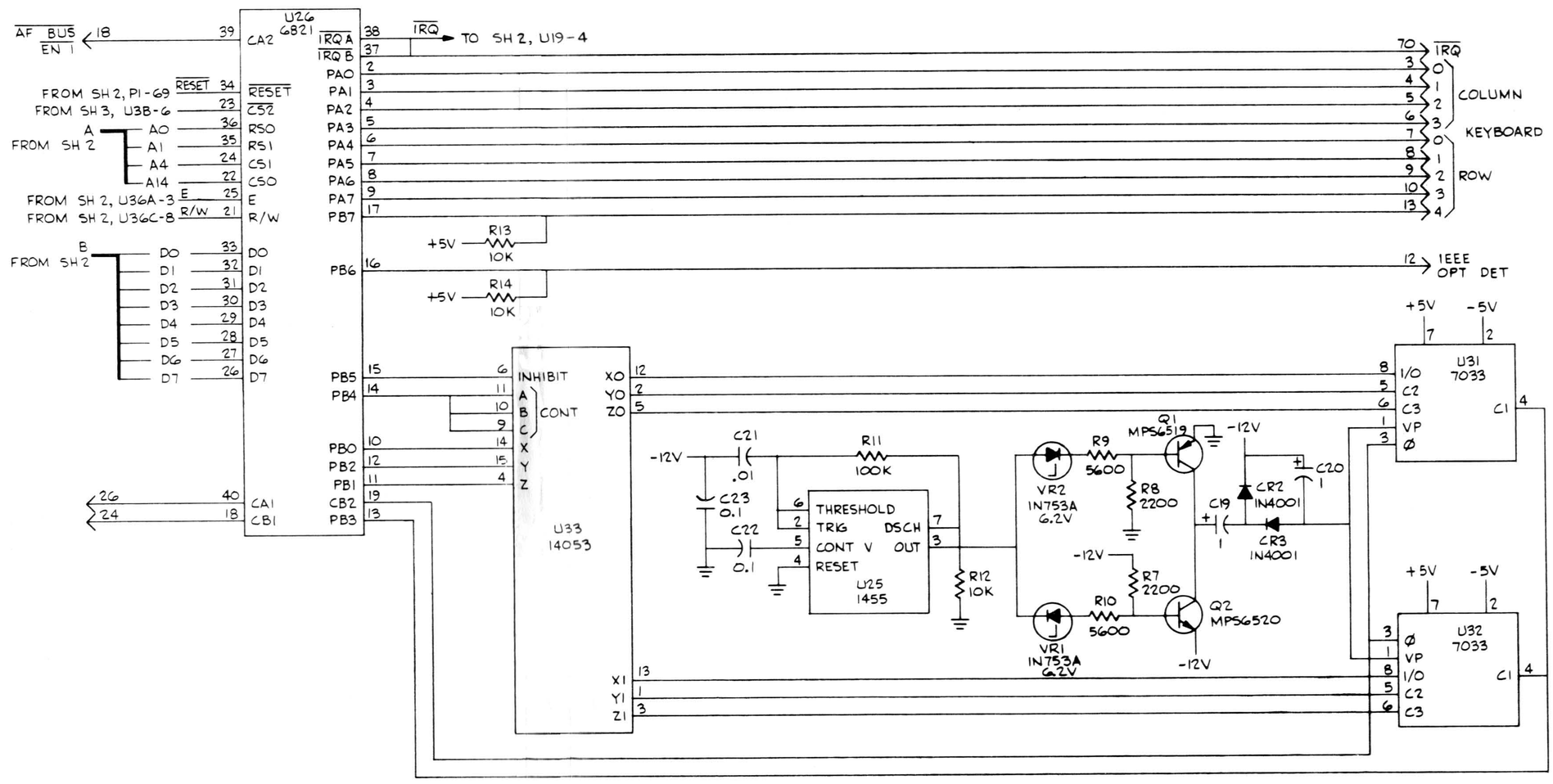

Figure 15-2. Processor Module A9
Schematic Diagram
(Sheet 4 of 7)

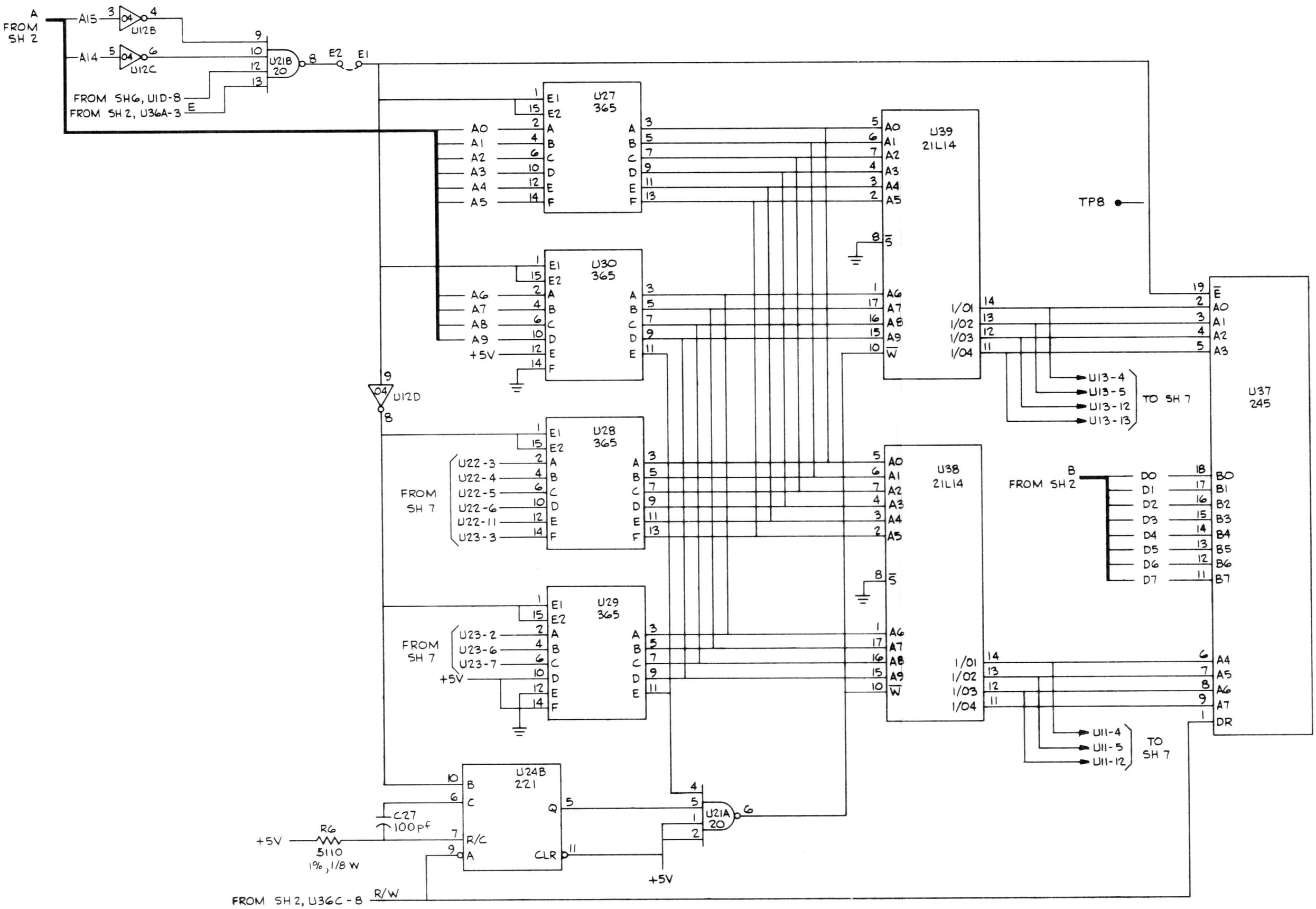

Figure 15-2. Processor Module A9 Schematic Diagram (Sheet 5 of 7)

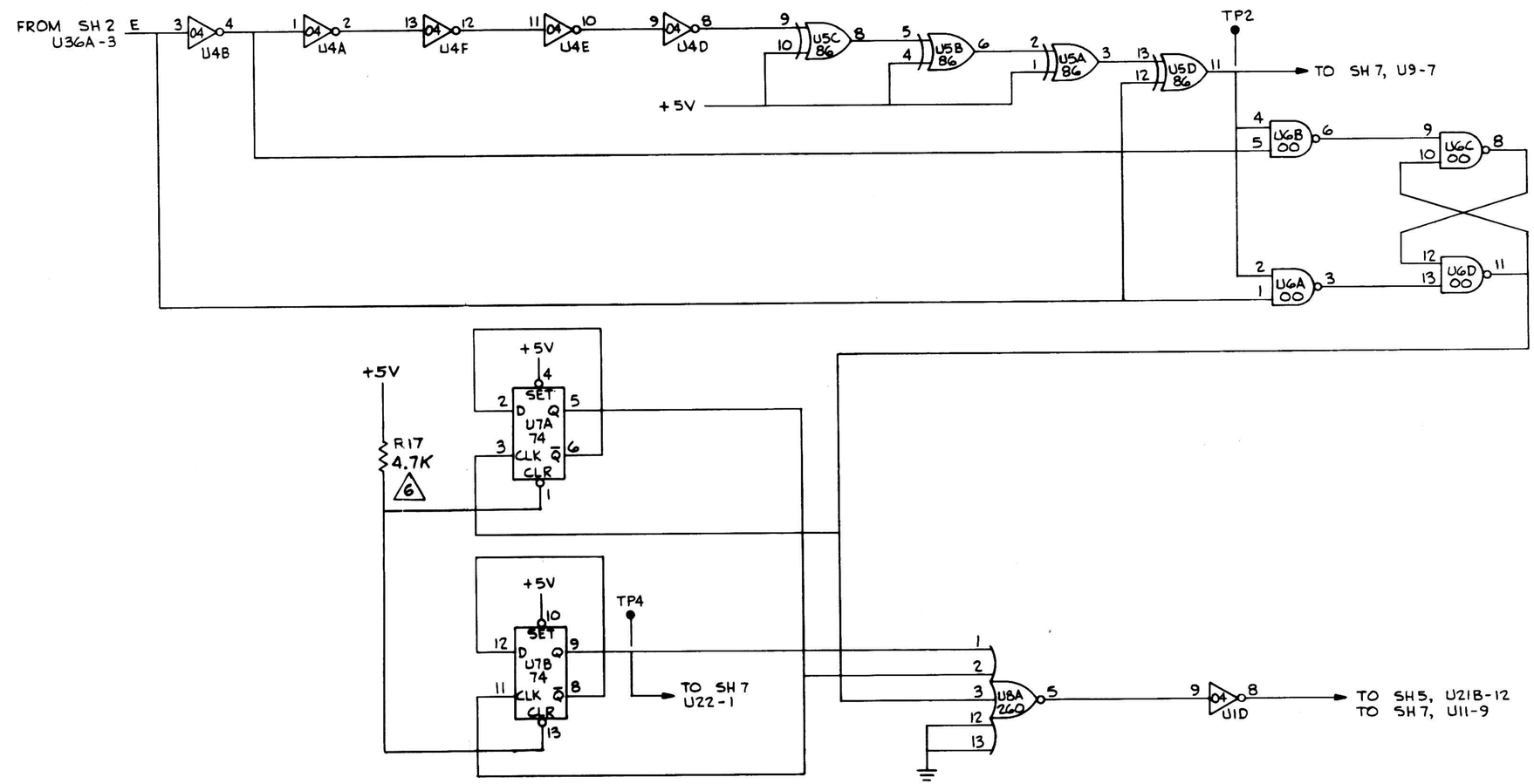

Figure 15-2. Processor Module A9
Schematic Diagram
(Sheet 6 of 7)

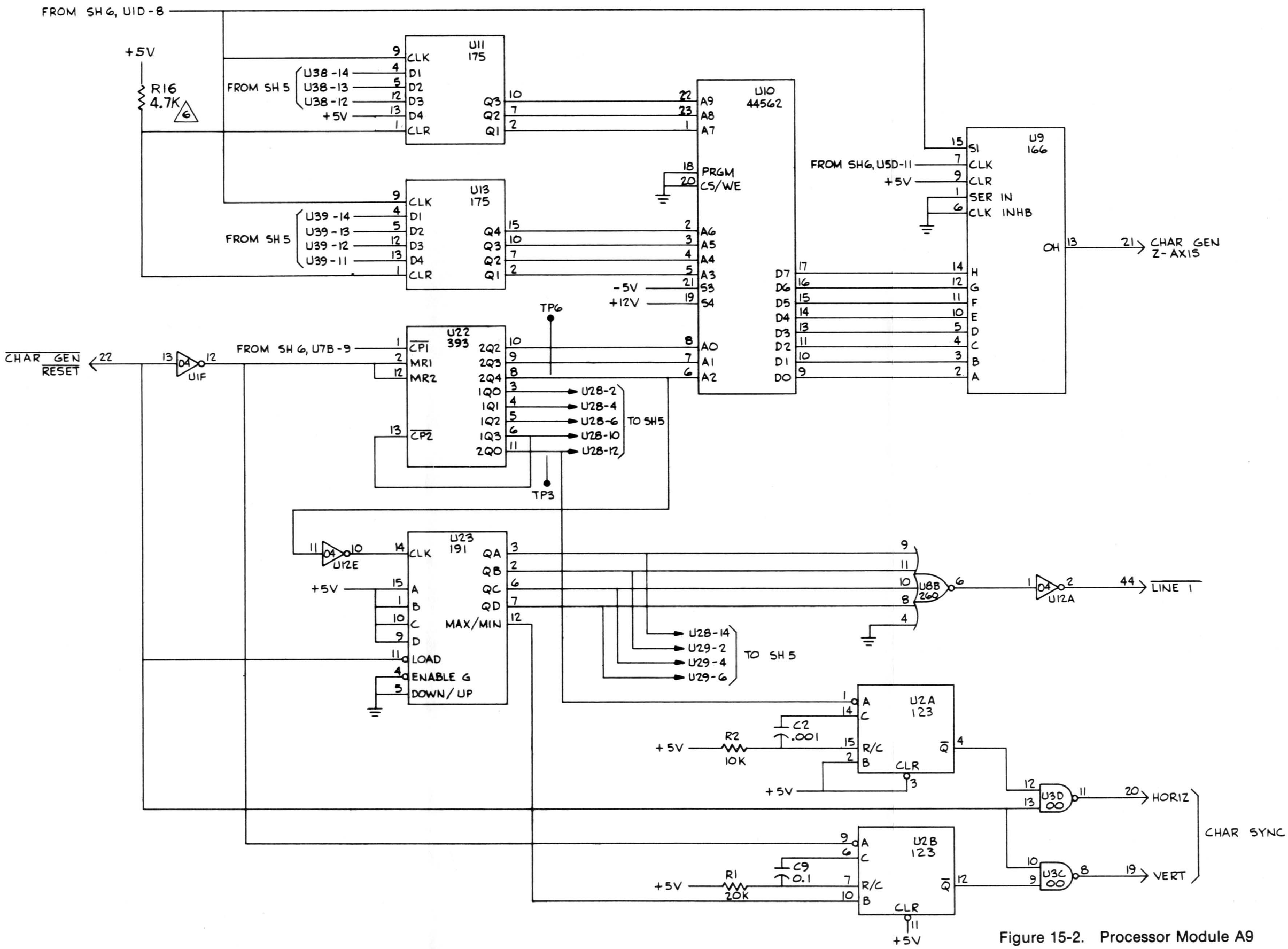

Figure 15-2. Processor Module A9 Schematic Diagram (Sheet 7 of 7)

Find No.	Qty. Req.	Part No.	Nomenclature	Part Value
		RTC-4019A	ICRO PROC CHAR GEN	
001	1	84-80331A40	PWB, MICRO PROC CHAR	
002	AR	RTV3145	ADHESIVE,SIL RUB	
003	AR	SN63WRP3	SOLDER	
004	AR	11-14167A01	INK	BLACK
005	1	7-80335A63	BRACKET,PWB MTG	
006	4	MS20470AD4-5	RIVET	1/8X.312
007	2	5C84500B03	EYELET	
008	2	42C84284B01	RETAINER	
009	2	MS35206-214	SCREW,PH	4-40X.312
C 001	1	21-80369A82	CAPACITOR	.1UF-20-100
C 002	1	21D82187B14	CAPACITOR	1000PF-10-100
C 003	1	21-80369A82	CAPACITOR	.1UF-20-100
C 004	1	21-80369A82	CAPACITOR	.1UF-20-100
C 005	1	21-80369A82	CAPACITOR	.1UF-20-100
C 006	1	21-80369A82	CAPACITOR	.1UF-20-100
C 007	1	21-80369A82	CAPACITOR	.1UF-20-100
C 008	1	21-80369A82	CAPACITOR	.1UF-20-100
C 009	1	21-80348A89	CAPACITOR	.1UF-20-16
C 010	1	21-80369A82	CAPACITOR	.1UF-20-100
C 011	1	21-80369A82	CAPACITOR	.1UF-20-100
C 012	1	21-80369A82	CAPACITOR	.1UF-20-100
C 013	1	CM04ED270J03	CAPACITOR	27PF-5-500
C 014	1	CM04ED270J03	CAPACITOR	27PF-5-500
C 015	1	23D84665F01	CAPACITOR	10UF-25V
C 016	1	21-80369A82	CAPACITOR	.1UF-20-100
C 017	1	21-80369A82	CAPACITOR	.1UF-20-100
C 018	1	21-80369A82	CAPACITOR	.1UF-20-100
C 019	1	23D83441B15	CAPACITOR	1.0UF-20-35
C 020	1	23D83441B15	CAPACITOR	1.0UF-20-35
C 021	1	21D82428B59	CAPACITOR	.01UF-2080-200
C 022	1	21-80369A82	CAPACITOR	.1UF-20-100
C 023	1	21-80369A82	CAPACITOR	.1UF-20-100
C 024	1	21-80369A82	CAPACITOR	.1UF-20-100
C 025	1	21-80369A82	CAPACITOR	.1UF-20-100
C 026	1	21-80369A82	CAPACITOR	.1UF-20-100
C 027	1	21-80369A93	CAPACITOR	100PF-5-500
C 028	1	21-80369A82	CAPACITOR	.1UF-20-100
C 029	1	21-80369A82	CAPACITOR	.1UF-20-100
C 030	1	21-80369A82	CAPACITOR	.1UF-20-100
C 031	1	21-80369A82	CAPACITOR	.1UF-20-100
C 032	1	21-80369A82	CAPACITOR	.1UF-20-100
C 033	1	21-80369A82	CAPACITOR	.1UF-20-100
C 034	1	23D84665F01	CAPACITOR	10UF-25V
C 035	1	23D84665F01	CAPACITOR	10UF-25V
C 036	1	23D84665F01	CAPACITOR	10UF-25V
C 037	1	23D84665F01	CAPACITOR	10UF-25V
CR001	1	48-84463K02	DIODE	
CR002	1	48-86850C47	DIODE	
CR003	1	48-86850C47	DIODE	

Find No.	Qty. Req.	Part No.	Nomenclature	Part Value
Q 001	1	48-80368A92	TRANSISTOR	MPS6519 SCREENED
Q 002	1	48-80368A91	TRANSISTOR	MPS6520 SCREENED
R 001	1	6S124A80	RESISTOR	20K-5-1/4
R 002	1	6S124A73	RESISTOR	10K-5-1/4
R 003	1	6S124A61	RESISTOR	3.3K-5-1/4
R 004	1	6S124A61	RESISTOR	3.3K-5-1/4
R 005	1	6S124A85	RESISTOR	33K-5-1/4
R 006	1	6-10621C63	RESISTOR	5110-1-1/8
R 007	1	6S124A57	RESISTOR	2.2K-5-1/4
R 008	1	6S124A57	RESISTOR	2.2K-5-1/4
R 009	1	6S124A67	RESISTOR	5.6K-5-1/4
R 010	1	6S124A67	RESISTOR	5.6K-5-1/4
R 011	1	6S124A97	RESISTOR	100K-5-1/4
R 012	1	6S124A73	RESISTOR	10K-5-1/4
R 013	1	6S124A73	RESISTOR	10K-5-1/4
R 014	1	6S124A73	RESISTOR	10K-5-1/4
R 015	1	6S124A61	RESISTOR	3.3K-5-1/4
R 016	1	6S124A65	RESISTOR	4.7K-5-1/4
R 017	1	6S124A65	RESISTOR	4.7K-5-1/4
R 018	1	6S124A65	RESISTOR	4.7K-5-1/4
TP001	1	3-582118-9	JACK,TIP	WHITE
TP002	1	3-582118-9	JACK,TIP	WHITE
TP003	1	3-582118-9	JACK,TIP	WHITE
TP004	1	3-582118-9	JACK,TIP	WHITE
TP005	1	3-582118-9	JACK,TIP	WHITE
TP006	1	3-582118-9	JACK,TIP	WHITE
TP007	1	3-582118-9	JACK,TIP	WHITE
TP008	1	3-582118-9	JACK,TIP	WHITE
U 001	1	51-80368A11	INTEGRATED CIRCUIT	SN74LS04NS SCREENED
U 002	1	51-80358A12	INTEGRATED CIRCUIT	SN74LS123 SCREENED
U 003	1	51-80368A09	INTEGRATED CIRCUIT	SN74LS00NS SCREENED
U 004	1	51-80368A11	INTEGRATED CIRCUIT	SN74LS04NS SCREENED
U 005	1	51-80368A25	INTEGRATED CIRCUIT	SN74LS86NS SCREENED
U 006	1	51-80368A73	INTEGRATED CIRCUIT	SN74S00N SCREENED
U 007	1	51-80368A24	INTEGRATED CIRCUIT	SN74LS74NS SCREENED
U 008	1	51-80368A29	INTEGRATED CIRCUIT	SN74LS260N SCREENED
U 009	1	51-80368A15	INTEGRATED CIRCUIT	SN74LS166NS SCREENED
U 010	1	51-80345A12	INTEGRATED CIRCUIT	
U 011	1	51-80368A16	INTEGRATED CIRCUIT	SN74LS175NS SCREENED
U 012	1	51-80368A11	INTEGRATED CIRCUIT	SN74LS04NS SCREENED
U 013	1	51-80368A16	INTEGRATED CIRCUIT	SN74LS175NS SCREENED
U 014	1	51-80368A14	INTEGRATED CIRCUIT	SN74LS139NS SCREENED
U 016	1	51-80368A03	INTEGRATED CIRCUIT	
U 017	1	51-80368A04	INTEGRATED CIRCUIT	
U18	1	51-80368A04	INTEGRATED CIRCUIT	
U19	1	51-80368A71	INTEGRATED CIRCUIT	MC6802P SCREENED
U20	1	51-80368A20	INTEGRATED CIRCUIT	SN74LS245NS SCREENED
U21	1	51-80368A17	INTEGRATED CIRCUIT	SN74LS20NS SCREENED
U22	1	51-80368A22	INTEGRATED CIRCUIT	SN74LS393NS SCREENED
U23	1	51-80368A74	INTEGRATED CIRCUIT	SN74LS191NS SCREENED

Find No.	Qty. Req.	Part No.	Nomenclature	Part Value
U 024	1	51-80368A28	INTEGRATED CIRCUIT	SN74LS221N SCREENED
U 025	1	51-80368A69	INTEGRATED CIRCUIT	MC1455P1 SCREENED
U 026	1	51-80368A72	INTEGRATED CIRCUIT	MC6821P SCREENED
U 027	1	51-80345A31	INTEGRATED CIRCUIT	SN74LS365ANS SCRN
U 028	1	51-80345A31	INTEGRATED CIRCUIT	SN74LS365ANS SCRN
U 029	1	51-80345A31	INTEGRATED CIRCUIT	SN74LS365ANS SCRN
U 030	1	51-80345A31	INTEGRATED CIRCUIT	SN74LS365ANS SCRN
U 031	1	51-80368A08	INTEGRATED CIRCUIT	
U 032	1	51-80368A08	INTEGRATED CIRCUIT	
U 033	1	51-80368A39	INTEGRATED CIRCUIT	MC14053BCP SCREENED
U 034	1	51-80368A19	INTEGRATED CIRCUIT	SN74LS244NS SCREENED
U 035	1	51-80368A19	INTEGRATED CIRCUIT	SN74LS244NS SCREENED
U 036	1	51-80368A13	INTEGRATED CIRCUIT	SN74LS125ANS SCRN
U 037	1	51-80368A20	INTEGRATED CIRCUIT	SN74LS245NS SCREENED
U 038	1	51-80345A11	INTEGRATED CIRCUIT	
U 039	1	51-80345A11	INTEGRATED CIRCUIT	
VR001	1	48-84302A09	DIODE,ZENER	6.2V-5-.4
VR002	1	48-84302A09	DIODE,ZENER	6.2V-5-.4
Y 001	1	48-80346A06	CRYSTAL	4.0MHZ
001	1	84-80331A40	PWB, MICRO PROC CHAR	

Figure 15-3. Processor Module A9 (RTC-4019B)
Parts Location Diagram

SECTION 16

HIGH VOLTAGE POWER SUPPLY (A10)

16-1. GENERAL. CRT bias and drive voltages are provided by the high voltage power supply. The power supply converts a nominal 15 VDC input to output voltages of +4 kV and a -2 kV. In addition, control circuits for the CRT focus and intensity grids are contained in this power supply. The high voltage power supply block and schematic diagrams are shown in figures 16-1 and 16-2, respectively.

16-2. HIGH VOLTAGE SUPPLY. An 8 VDC at the center tap of the high voltage transformer is switched, through the transformer primary winding by the chopper, at a 20 kHz rate. The chopper drive signals originate in the low voltage power supply. One transformer secondary winding provides a 6.3 VAC CRT heater voltage. The other transformer secondary winding provides a 1 kV to a X4 multiplier and a X2 multiplier. The output of the X4 multiplier, a nominal +4 kV is the CRT anode voltage. A nominal -2 kV output of the X2 multiplier is applied to the intensity and focus modulators. The -2 kV is regulated by comparing a sample of the -2 kV to a 6.3V reference signal. The resultant signal controls the level of the DC input at the center tap of the high voltage transformer. A bias divider, on the transformer center tap, provides the HV CHOPPER BIAS signal to the low voltage power supply.

16-3. INTENSITY AND FOCUS CONTROL. An 87V zener diode and a resistive divider circuit provide the intensity and focus voltages. Each modulator provides variable output voltages, within their bias range, under the control of the low voltage INTENSITY TV and FOCUS TV input signals. The grid and focus voltages are stabilized by using DC control loops. The INTENSITY SAMPLE signal and the HV REF signal are compared, on the scope amplifier module, to an input control signal. The result of this comparison is the INTENSITY TV signal. In a similar manner, the FOCUS SAMPLE signal is compared, on the scope amplifier module, to the input control signal. This results in the FOCUS TV signal.

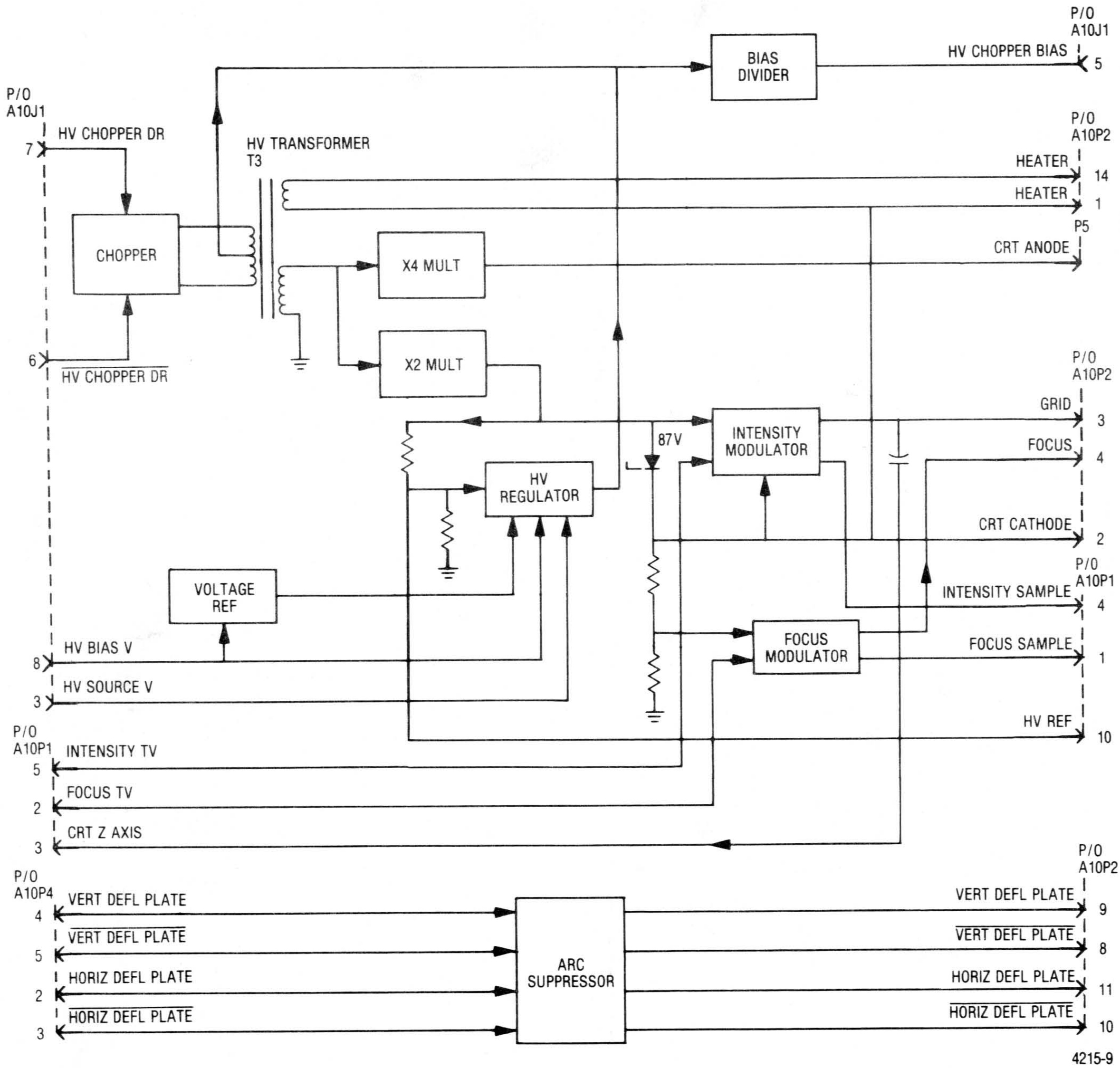

Figure 16-1. High Voltage Power Supply A10 Block Diagram

NOTES:

1. PARTIAL REFERENCE DESIGNATIONS ARE SHOWN. FOR COMPLETE DESIGNATION PREFIX WITH 1A10
2. FOR REFERENCE DRAWINGS REFER TO:
   01-P07896V001 HIGH VOLTAGE PS ASSY
   01-P07878V001 HIGH VOLTAGE PWB ASSY
3. UNLESS OTHERWISE SPECIFIED:
   ALL RESISTORS ARE IN OHMS, ±5 PCT, 1/4 WATT.
   ALL CAPACITORS ARE IN UF.
   ALL VOLTAGES ARE DC.

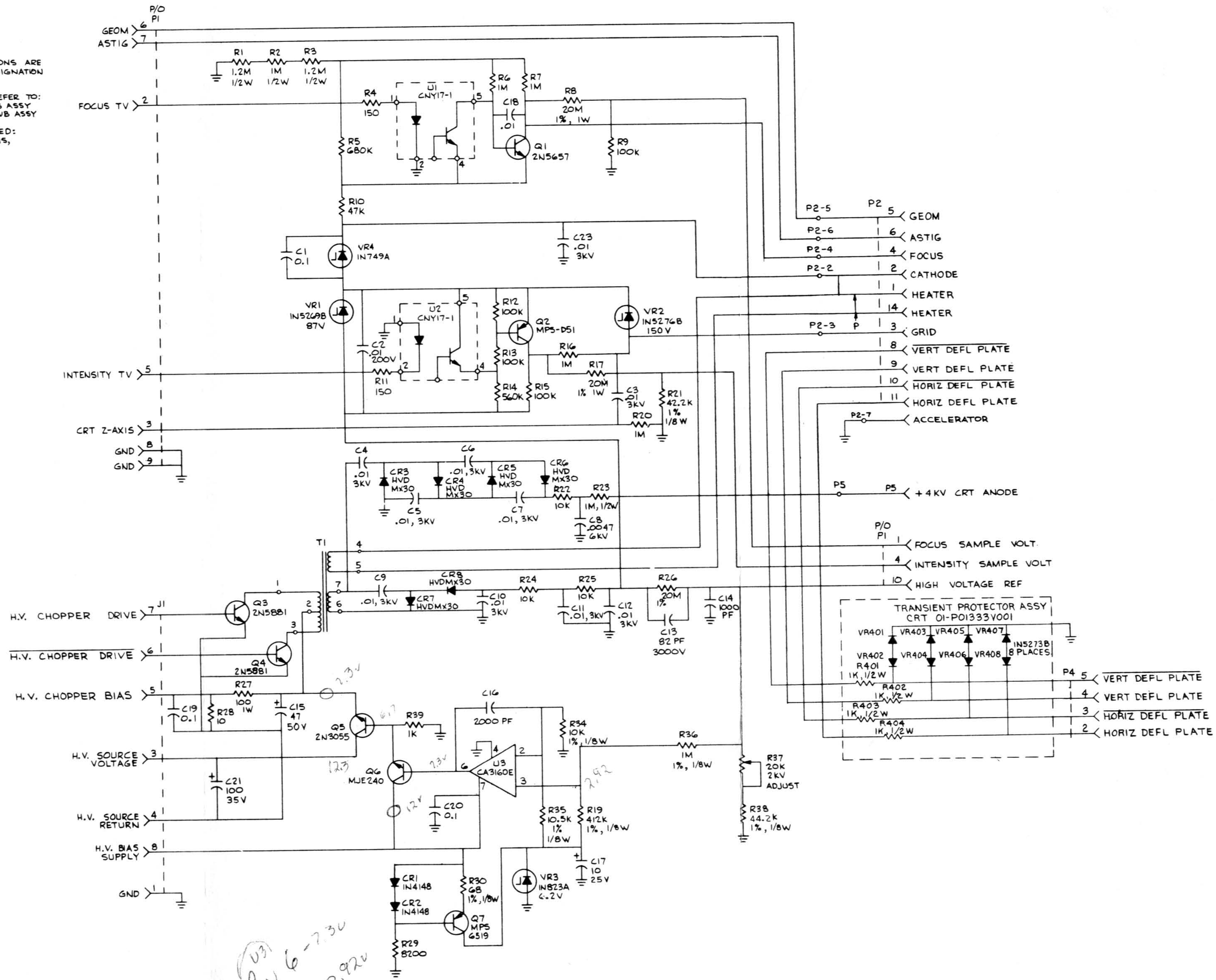

Figure 16-2. High Voltage Power Supply A10 Schematic Diagram

Find No.	Qty. Req.	Part No.	Nomenclature	Part Value
A10		RTP-1006A	.HIGH VOLT PWR SUPPLY	
001	1	RTP-4015A	HIGH VOLTAGE PWB ASSY	
002	1	15-P07859V001	HOUSING,H V PWR SUPPL	
003	2	821-S-2	SCREW,CAPTIVE	4-40
004	10	MS35206-215	SCREW,PH	.1120-40X.375
005	10	MS27183-3	WASHER,FLAT	.125
006	10	MS35338-40	WASHER,LOCK	.112
007	6	2634-18031-N140	WASHER,SHOULDER	
008	3	14-15141A01	INSULATOR,MICA	
009	AR	G-642	COMPOUND,THERMAL	
010	AR	F01A070	WIRE,HIGH VOLTAGE	
011	AR		WIRE	24 WHT
012	AR	SN63WRMAP3	SOLDER	
013	AR	11-14167A01	INK	BLACK
014	1	1-80304A60	TRANSIENT PROTECTOR	
015	1	MS35489-6	GROMMET	
016	1	14-80370A47	INSULATOR	
017	1	3016-A-2-A-9	SPACER	
P 002	1	9-80331A82	CONNECTOR,CRT	
P 004	1	640440-5	CONNECTOR,5 PIN	
Q 003	1	2N5881	TRANSISTOR	
Q 004	1	2N5881	TRANSISTOR	
Q 005	1	48-869302	TRANSISTOR	

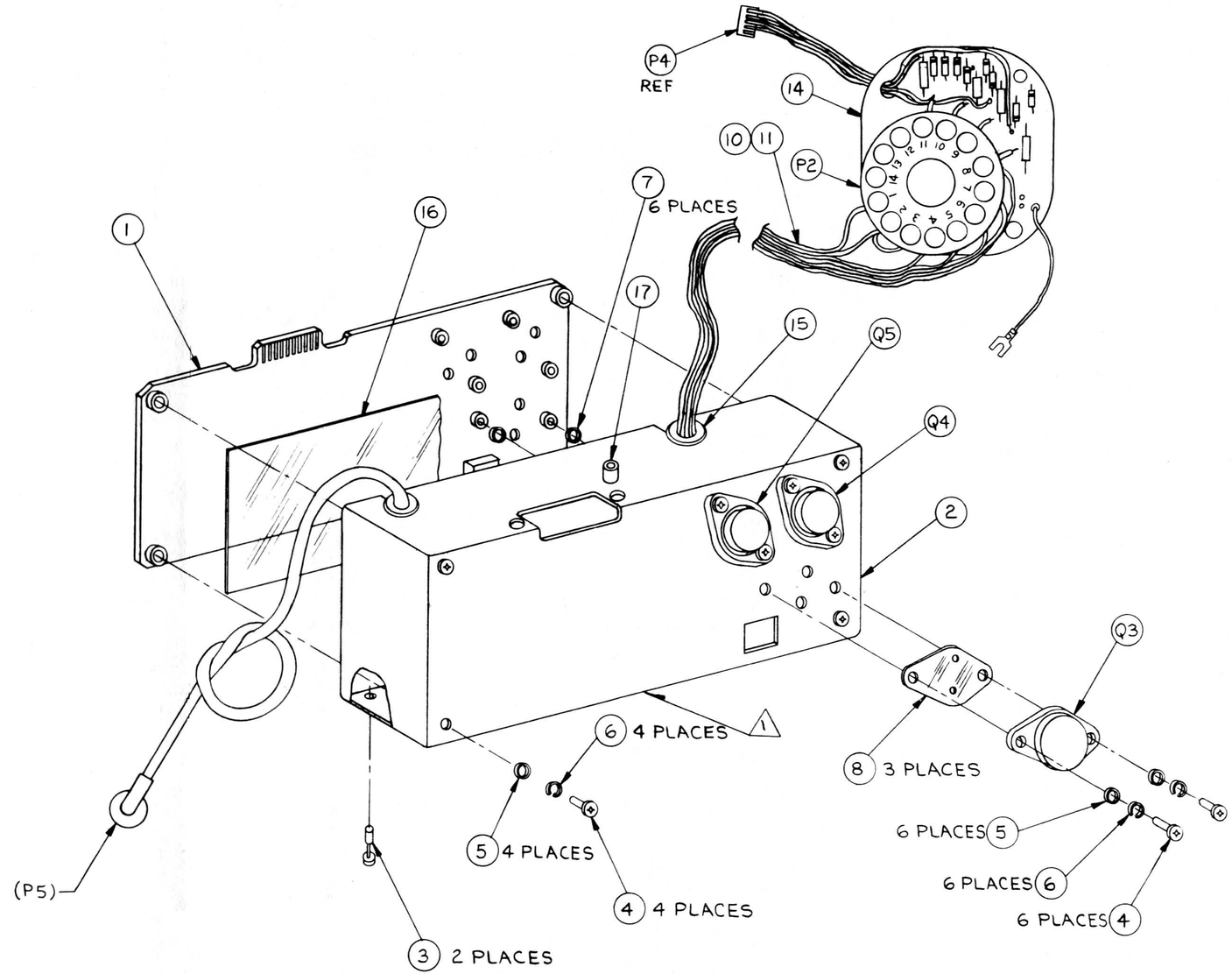

Figure 16-3. High Voltage Power Supply A10 (RTP-1006A) Parts Location Diagram

Find No.	Qty. Req.	Part No.	Nomenclature	Part Value
001	1	84-P01332V001	PRINTED WIRING BOARD	TRANSIENT PROTECTOR
002	AR		WIRE	22 WHT
003	AR		WIRE	16 WHT
004	1	601SL	TERMINAL,LUG	
005	AR	SN63WRP3	SOLDER	
P 004	1	640440-5	CONNECTOR,5 PIN	5 PIN
R 401	1	6-125A49	RESISTOR	1000-5-1/2
R 402	1	6-125A49	RESISTOR	1000-5-1/2
R 403	1	6-125A49	RESISTOR	1000-5-1/2
R 404	1	6-125A49	RESISTOR	1000-5-1/2
VR401	1	48-80368A95	DIODE,ZENER	120V
VR402	1	48-80368A95	DIODE,ZENER	120V
VR403	1	48-80368A95	DIODE,ZENER	120V
VR404	1	48-80368A95	DIODE,ZENER	120V
VR405	1	48-80368A95	DIODE,ZENER	120V
VR406	1	48-80368A95	DIODE,ZENER	120V
VR407	1	48-80368A95	DIODE,ZENER	120V
VR408	1	48-80368A95	DIODE,ZENER	120V

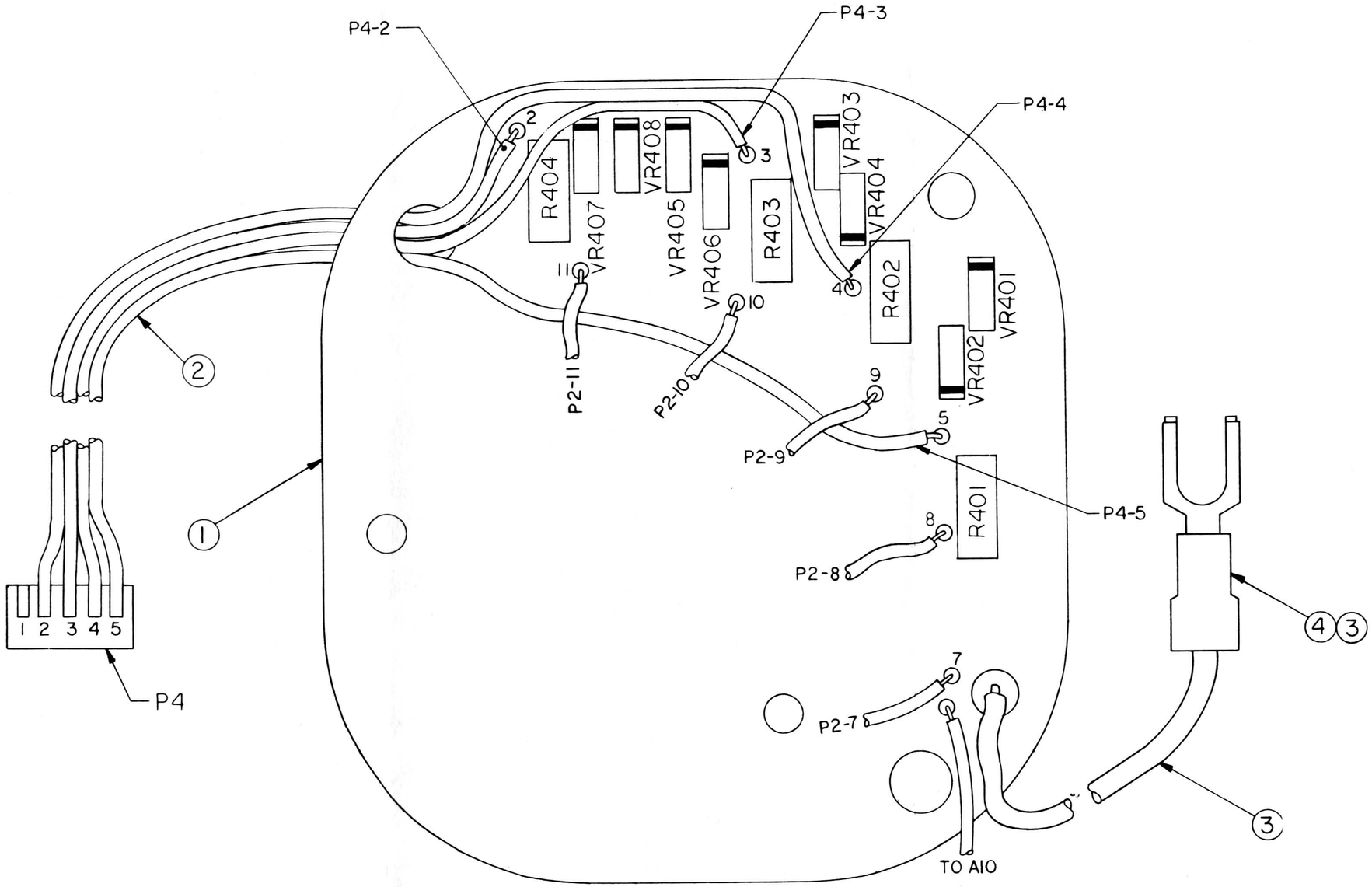

1-80304A60

Figure 16-4. Communications System Analyzer Transient Protector Assembly Parts Location Diagram

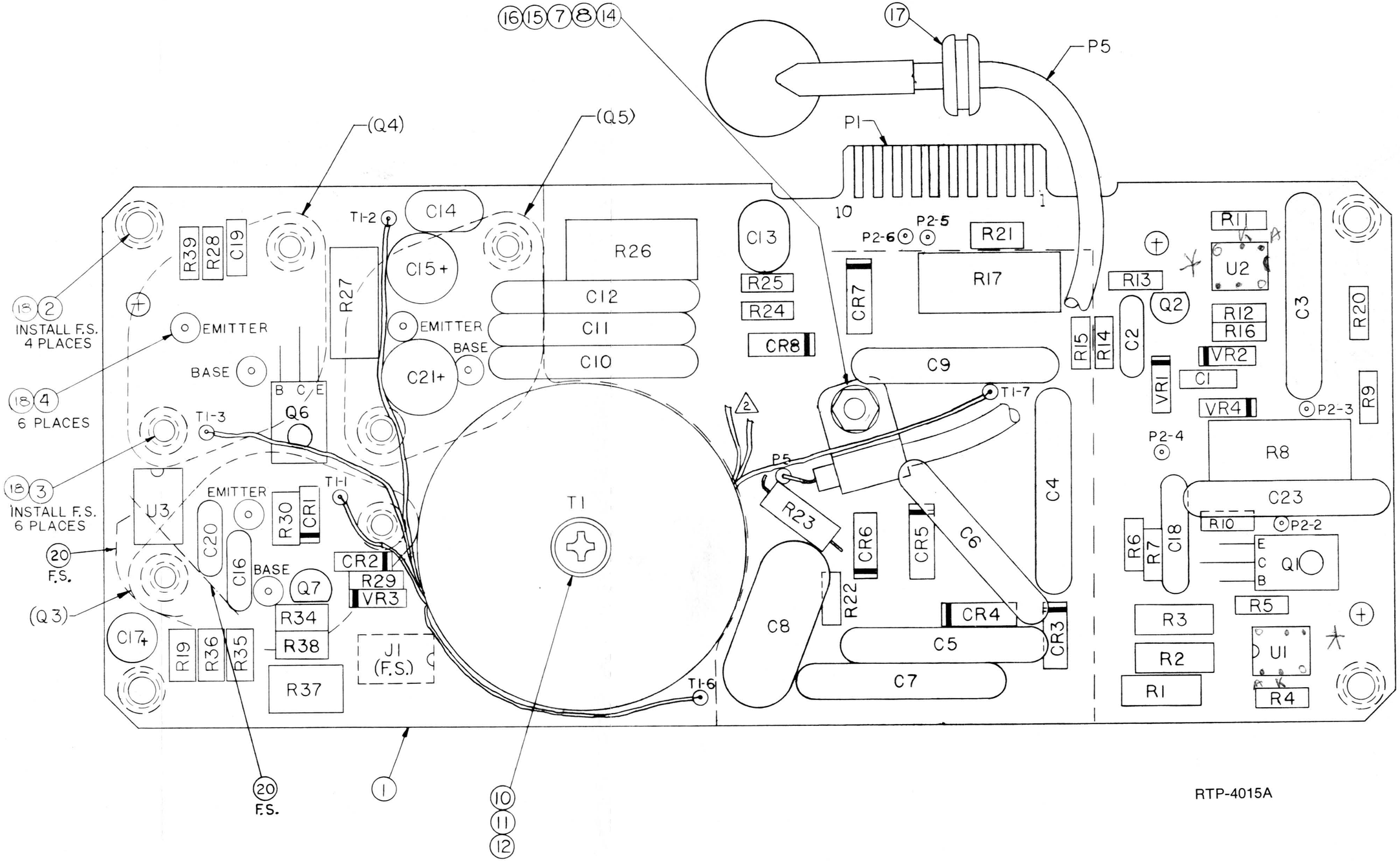

RTP-4015A

Figure 16-5. High Voltage Power Supply
A10 PWB Parts Location
Diagram (Sheet 1 of 2)

Find No.	Qty. Req.	Part No.	Nomenclature	Part Value
		RTP-4015A	HV PWR PWB ASSY	
001	1	84-P07879V001	PRINTED WIRING BOARD	
002	4	B1534-B-1/8-5	SPACER,SWAGE	.125LG
003	6	B1534-B-3/32-5	SPACER,SWAGE	.093LG
004	6	640206-1	JACK,PRINTED CIRCUIT	
007	1	MS35206-217	SCREW,PH	.1120-40X.500
008	1	MS35649-242	NUT,HEX	.1120-40
010	1	MS35206-329	SCREW	.1380-32X1.375
011	1	MS27183-5	WASHER,FL	.156
012	1	KF2-632	NUT,CLINCH	6-32
014	1	42-15031A60	CLAMP,LOOP NYLON	
015	1	MS27183-3	WASHER,FL	.125
016	1	MS35338-40	WASHER,LOCK	.112
017	1	MS35489-4	GROMMET,RUBBER	
018	AR	SN63WRP3	SOLDER	
019	AR	11-14167A01	INK	BLACK
020	AR		WIRE,SOLID	26 WHT
021	AR	RTV3140	COATING,SILICONE	
C 001	1	21-80369A82	CAPACITOR	.1UF-20-100
C 002	1	21D82428B59	CAPACITOR	.01UF-2080-200
C 003	1	21D83596E19	CAPACITOR	.01UF80-20-3KV
C 004	1	21D83596E19	CAPACITOR	.01UF80-20-3KV
C 005	1	21D83596E19	CAPACITOR	.01UF80-20-3KV
C 006	1	21D83596E19	CAPACITOR	.01UF80-20-3KV
C 007	1	21D83596E19	CAPACITOR	.01UF80-20-3KV
C 008	1	21-80369A80	CAPACITOR	.0047-6000
C 009	1	21D83596E19	CAPACITOR	.01UF80-20-3KV
C 010	1	21D83596E19	CAPACITOR	.01UF80-20-3KV
C 011	1	21D83596E19	CAPACITOR	.01UF80-20-3KV
C 012	1	21D83596E19	CAPACITOR	.01UF80-20-3KV
C 013	1	30GA-Q82	CAPACITOR	82PF-3KV
C 014	1	21D82187B14	CAPACITOR	1000PF-10-100
C 015	1	23-80369A79	CAPACITOR	47UF-50V
C 016	1	21D82428B36	CAPACITOR	2000PF-10-200
C 017	1	23D84665F01	CAPACITOR	10UF-25V
C 018	1	21D82428B19	CAPACITOR	.01UF-20-500
C 019	1	21-80369A82	CAPACITOR	.1UF-20-100
C 020	1	21-80369A82	CAPACITOR	.1UF-20-100
C 021	1	23-80369A73	CAPACITOR	100UF-35V
C 023	1	21D83596E19	CAPACITOR	.01MF-3KV
CR001	1	48-84463K02	DIODE	
CR002	1	48-84463K02	DIODE	
CR003	1	HVDMX30	DIODE	
CR004	1	HVDMX30	DIODE	
CR005	1	HVDMX30	DIODE	
CR006	1	HVDMX30	DIODE	
CR007	1	HVDMX30	DIODE	
CR008	1	HVDMX30	DIODE	
J 001	1	09-80331A95	SOCKET,SOLDER DIP	8 PIN
P 005	1	1-80304A58	LEAD ASSY,HV	

Find No.	Qty. Req.	Part No.	Nomenclature	Part Value
Q 001	1	48-80341A45	TRANSISTOR	
Q 002	1	48-80341A46	TRANSISTOR	MPS-D51 SCREENED
Q 006	1	MJE240	TRANSISTOR	
Q 007	1	48-80368A92	TRANSISTOR	MPS6519 SCREENED
R 001	1	6S125B24	RESISTOR	1.2M-5-1/2
R 002	1	6S125B22	RESISTOR	1M-5-1/2
R 003	1	6S125B24	RESISTOR	1.2M-5-1/2
R 004	1	6S124A29	RESISTOR	150-5-1/4
R 005	1	6S124B18	RESISTOR	680K-5-1/4
R 006	1	6S124B22	RESISTOR	1M-5-1/4
R 007	1	6S124B22	RESISTOR	1M-5-1/4
R 008	1	6-80331A37	RESISTOR	20M-1-1
R 009	1	6S124A97	RESISTOR	100K-5-1/4
R 010	1	6S124A89	RESISTOR	47K-5-1/4
R 011	1	6S124A29	RESISTOR	150-5-1/4
R 012	1	6S124A97	RESISTOR	100K-5-1/4
R 013	1	6S124A97	RESISTOR	100K-5-1/4
R 014	1	6S124B16	RESISTOR	560K-5-1/4
R 015	1	6S124A97	RESISTOR	100K-5-1/4
R 016	1	6S124B22	RESISTOR	1M-5-1/4
R 017	1	6-80331A37	RESISTOR	20M-1-1
R 019	1	6-10621E48	RESISTOR	412K-1-1/8
R 020	1	6S124B22	RESISTOR	1M-5-1/4
R 021	1	6-10621D52	RESISTOR	42.2K-1-1/8
R 022	1	6S124A73	RESISTOR	10K-5-1/4
R 023	1	6S125B22	RESISTOR	1M-5-1/2
R 024	1	6S124A73	RESISTOR	10K-5-1/4
R 025	1	6S124A73	RESISTOR	10K-5-1/4
R 026	1	6-80331A37	RESISTOR	20M-1-1/4
R 027	1	6S126A25	RESISTOR	100-5-1
R 028	1	6S124A01	RESISTOR	10-5-1/4
R 029	1	6S124A71	RESISTOR	8.2K-5-1/4
R 030	1	6-10621A81	RESISTOR	68.1-1-1/8
R 034	1	6-10621C91	RESISTOR	10K-1-1/8
R 035	1	6-10621C73	RESISTOR	10.5K-1-1/8
R 036	1	6-10621E85	RESISTOR	1M-1-1/8
R 037	1	18D83452F33	RESISTOR,VARIABLE	20K
R 038	1	RN55D4422F	RESISTOR	44.2K-1-1/8
R 039	1	6S124A49	RESISTOR	1K-5-1/4
T 001	1	25-80369A13	TRANSFORMER	
U 001	1	51-80348A81	INTEGRATED CIRCUIT	CNY17-1 SCREENED
U 002	1	51-80348A81	INTEGRATED CIRCUIT	CNY17-1 SCREENED
U 003	1	51-80345A02	INTEGRATED CIRCUIT	CA3160E SCREENED
VR001	1	48-80345A86	DIODE,ZENER	87V-5-.5
VR002	1	48-80345A87	DIODE,ZENER	150V-5-.5
VR003	1	48-80368A98	DIODE,ZENER	
VR004	1	48-83461E13	DIODE,ZENER	

Figure 16-5 High Voltage Power Supply A10 PWB Parts Location Diagram (Sheet 2 of 2)

SECTION 17

RF INPUT MODULE (A11)

17-1. General. The RF Input Module is subdivided into three isolate circuits; input protection and power meter, wideband amplifier and frequency converter and duplex generator. A block diagram of the RF Input Module is shown in figure 17-1 with its schematic shown in figure 17-2.

17-2. Input Protection and Power Meter. RF power to and from the system pass through this section to a common input/output RF connector (RF In/Out) attached to the module. In the generate or monitor operating modes the input protection relay is switched so that a low-loss 50-ohm path exists through the module. When the power monitor mode is selected, the WATT MTR EN line switches the relay so that the input is connected to a 50 ohm power termination. A detector across a portion of the load provides a DC level proportional to the input RF level. This level is amplified and made available to the system processor for the determination of input power. A thermal sensor monitors the load temperature and signals the processor when safe operating limits are exceeded. The processor in turn warns the operator that the RF input to the unit must be removed to prevent permanent damage.

17-3. If power in excess of 200 mW is applied to the system while operating in the 50 ohm load, protecting the system. A signal line (INPUT PROTECT ACT) to the processor results in an audiable and visual warning to the operator that the unit is in a protected mode. The warning ceases and normal operation resumes if the RF input is removed or if the power monitor mode is selected.

17-4. Wideband Amplifier and Frequency Converter. The wideband amplifier provides a leveled RF output from -3dBm to +13dBm in the generate mode and a +7dBm LO drive in the monitor modes over the 10 KHz to I GHz frequency range. Primary components of the leveling loop are; the input VCA (Voltage Controlled Attenuator), the output level detector, and the level comparator. A level control voltage, proportional to the desired output level, is compared to the actual output level as determined by the level detector. The result of the comparison steers the VCA maintaining the detected output level equal to the requested output level. In the generate mode the control voltage is obtained from the front panel RF level control (AM Mod + DC REF). For generate AM, the modulation signal is summed with the DC control level, causing the RF output level to follow the modulation signal. Also, in the generate mode the signal from the output level detector(CARRIER + MOD LVL) is made available for the determination of RF output power and percent of AM. A fixed reference voltage is switched to the level control input in the monitor modes giving a leveled +7dBm local oscillator drive.

17-5. The VCA on the wideband amplifier board covers the frequency range from 1 MHz to 1 GHz. For frequencies below 1 MHz, the VCA select circuit clamps the VCA in the minimum attenuation position and enables a low frequency VCA in the RF Synthesizer. Coincident with the enabling of the low frequency VCA, the time constant of the output RF level detector is increased assuring proper operation down to 10 kHz.

17-6. The wideband amplifier output is relay switched between the local oscillator port of the input mixer for the monitor and generate DSBSC modes, and the RF attenuator for the generate mode. An RF sample from the mixer local oscillator output terminal, at a nominal level of -20dBm, is provided to the duplex generator.

17-7. The frequency converter section consists of the input mixer, the first IF amplifier, and IF filters. In the monitor mode the desired signal is converted to 10.7 MHz by the input mixer. A two-pole input filter, IF amplifier, and a four-pole output filter select the 10.7 MHz component at the mixer output. The 10.7 MHz IF output of the converter is applied to the receiver module.

17-8. For DSBSC generation the modulation audio is applied to the IF port of the input mixer through an isolation network. With the output of the wideband amplifier switched to the local oscillator port, a DSBSC signal is present at the RF port. Switching the Step Attenuator to the RF output port makes the DSBSC signal available at the RF output.

17-9. Duplex Generator. The Duplex Generator output is a frequency component that is offset from the system monitor frequency by 0 to 10 MHz or by 45 MHz. The offset is obtained by mixing the -20dBm local oscillator signal from the wideband amp, which is already offset by 10.7 MHz, with a signal frequency from 10.7 MHz to 0.7 MHz or 34.3 MHz.

17-10. For the 34.3 MHz mixing signal, a single VCO is used. Tuning of the VCO is with the OFFSET FINE TUNE line from the front panel. Frequency modulation of the VCO is implemented by suming the OFFSET MOD signal with the tuning voltage.

17-11. For the 0.7 MHz to 10.7 MHz mixing signal a VCO with a frequency range from 35 MHz to 45 MHz is mixed with the 34.3 MHz VCO. The 35-45 MHz VCO is tuned by the OFFSET COARSE TUNE line from the front panel.

17-12. A sample of the offset frequency is made available to the frequency counter on the OFFSET FREQ line. The processor uses the frequency information to calculate and display the actual duplex frequency.

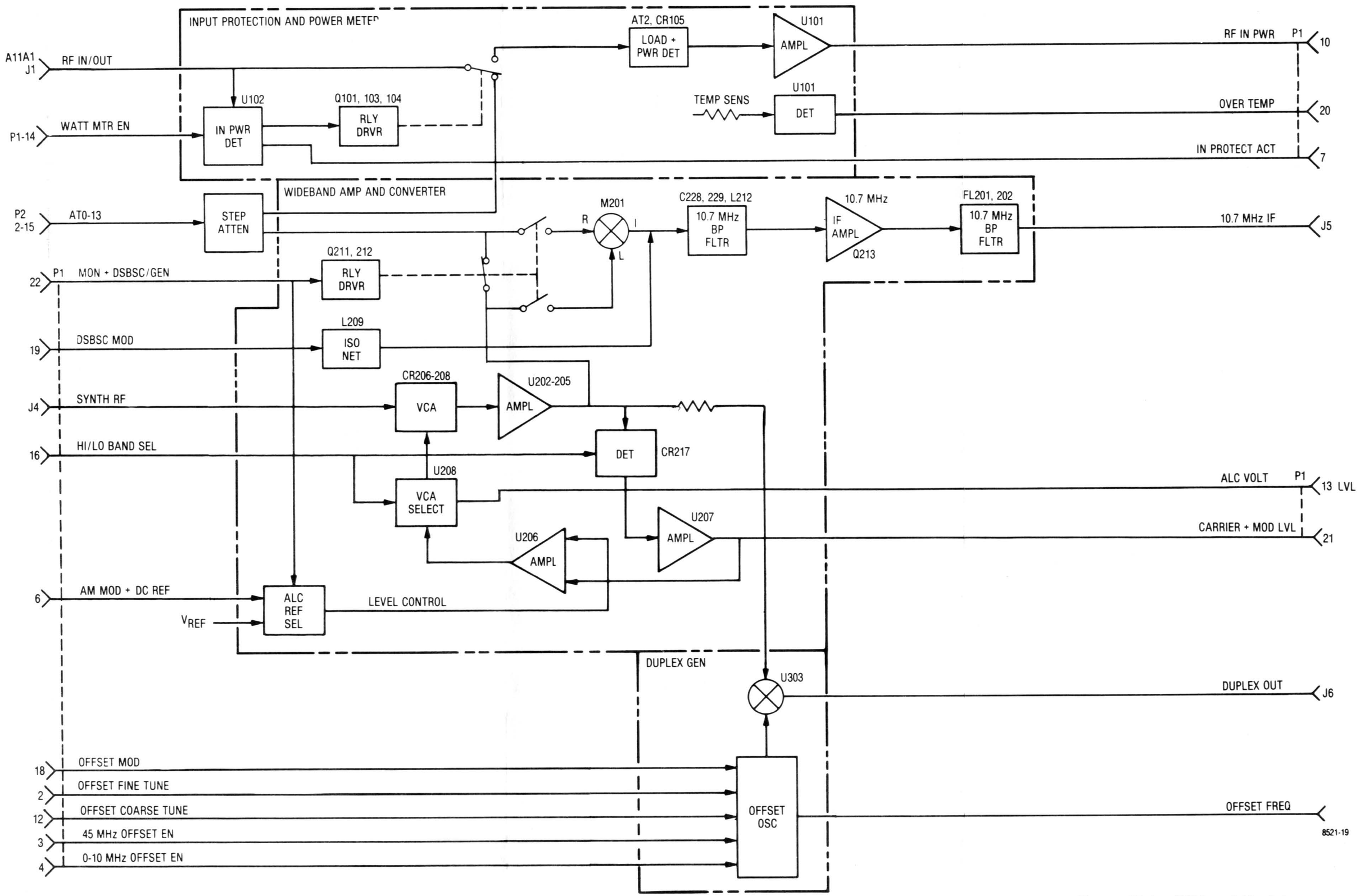

Figure 17-1. RF Input Module
A11 Block Diagram

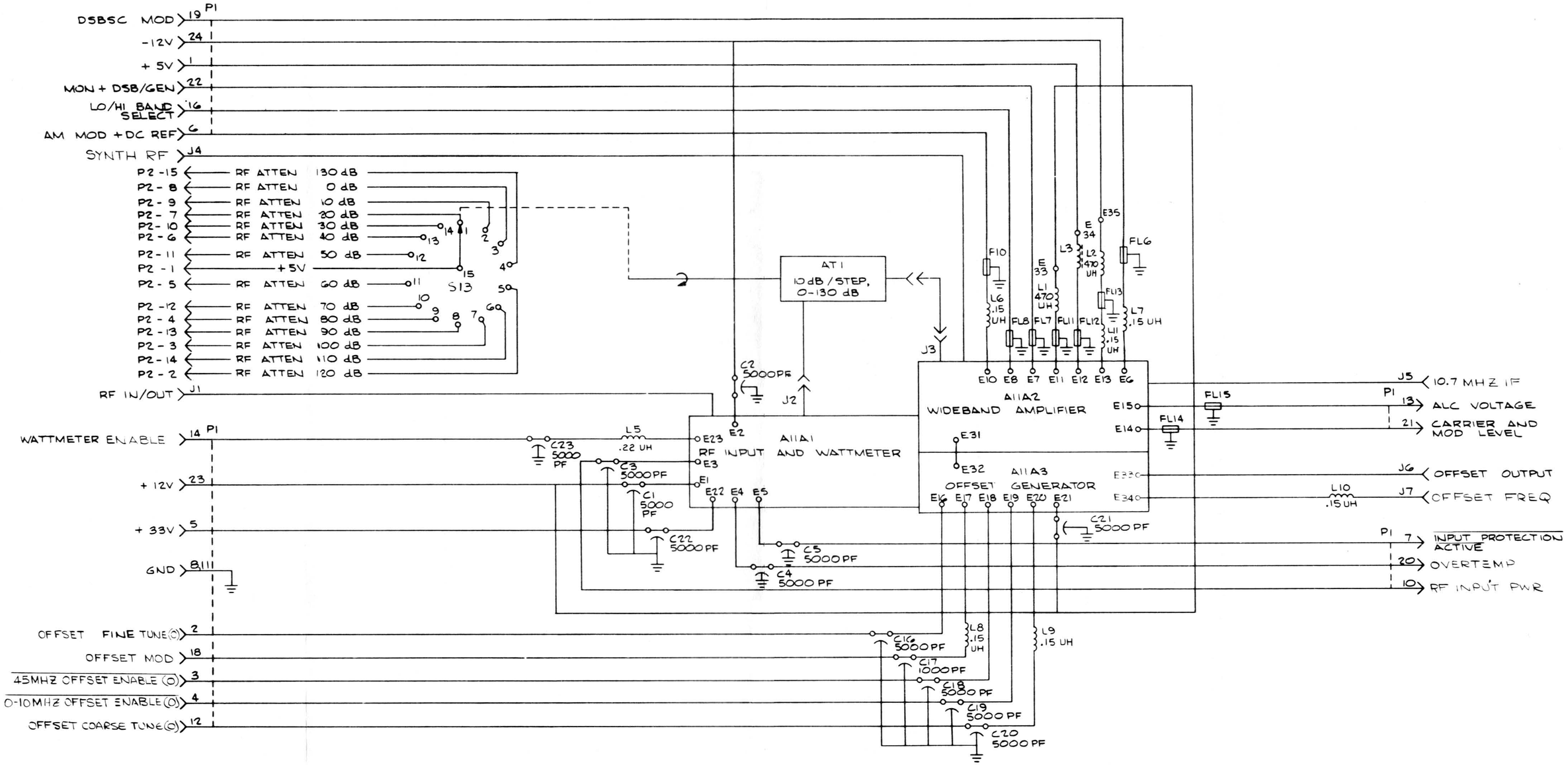

Figure 17-2. RF Input Module A11 Schematic Diagram

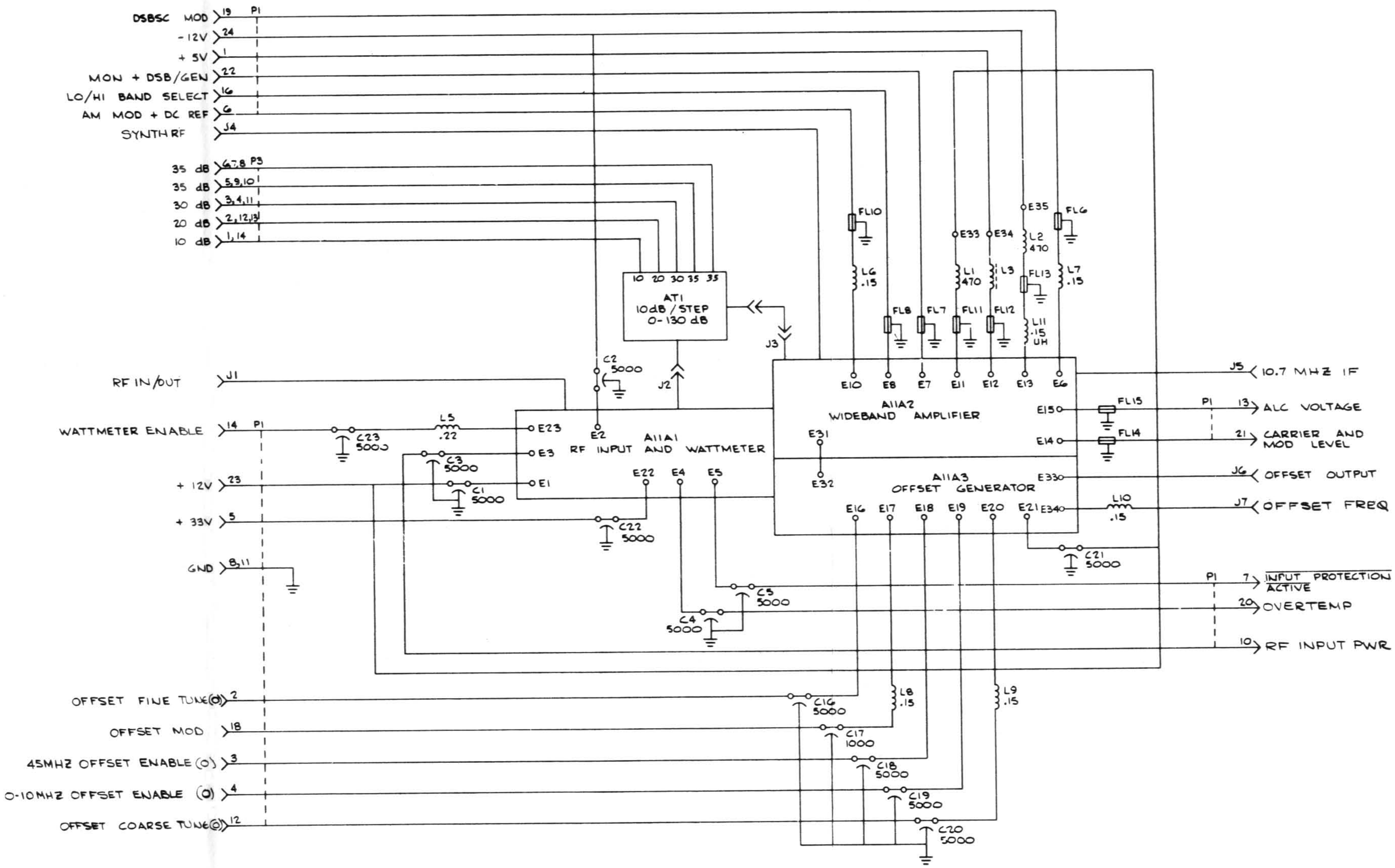

NOTES:

1. FOR REFERENCE DRAWINGS REFER TO:
   A11 01-P00394N004
   A11A1 01-P00400N
   63-P06828R
   A11A2 01-P00398N
   63-P06829R
   A11A3 01-P00399N
   63-P06830R

2. UNLESS OTHERWISE SPECIFIED:
   ALL FEEDTHRU CAPACITORS ARE IN PF.
   ALL INDUCTORS ARE IN UH.

Figure 17-3. RF Input Module A11 with IEEE Option Schematic Diagram

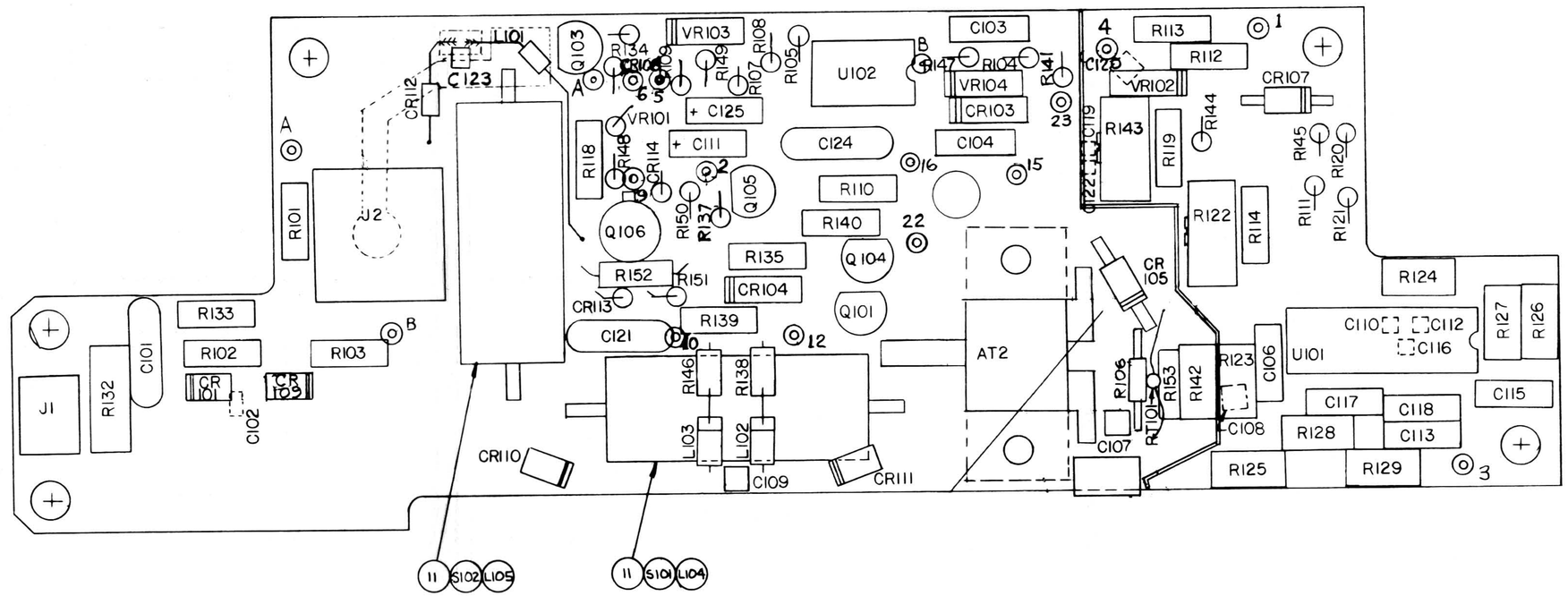

Figure 17-6. RF Input/Wattmeter A11A1 (RTL-4061B) Parts Location Diagram

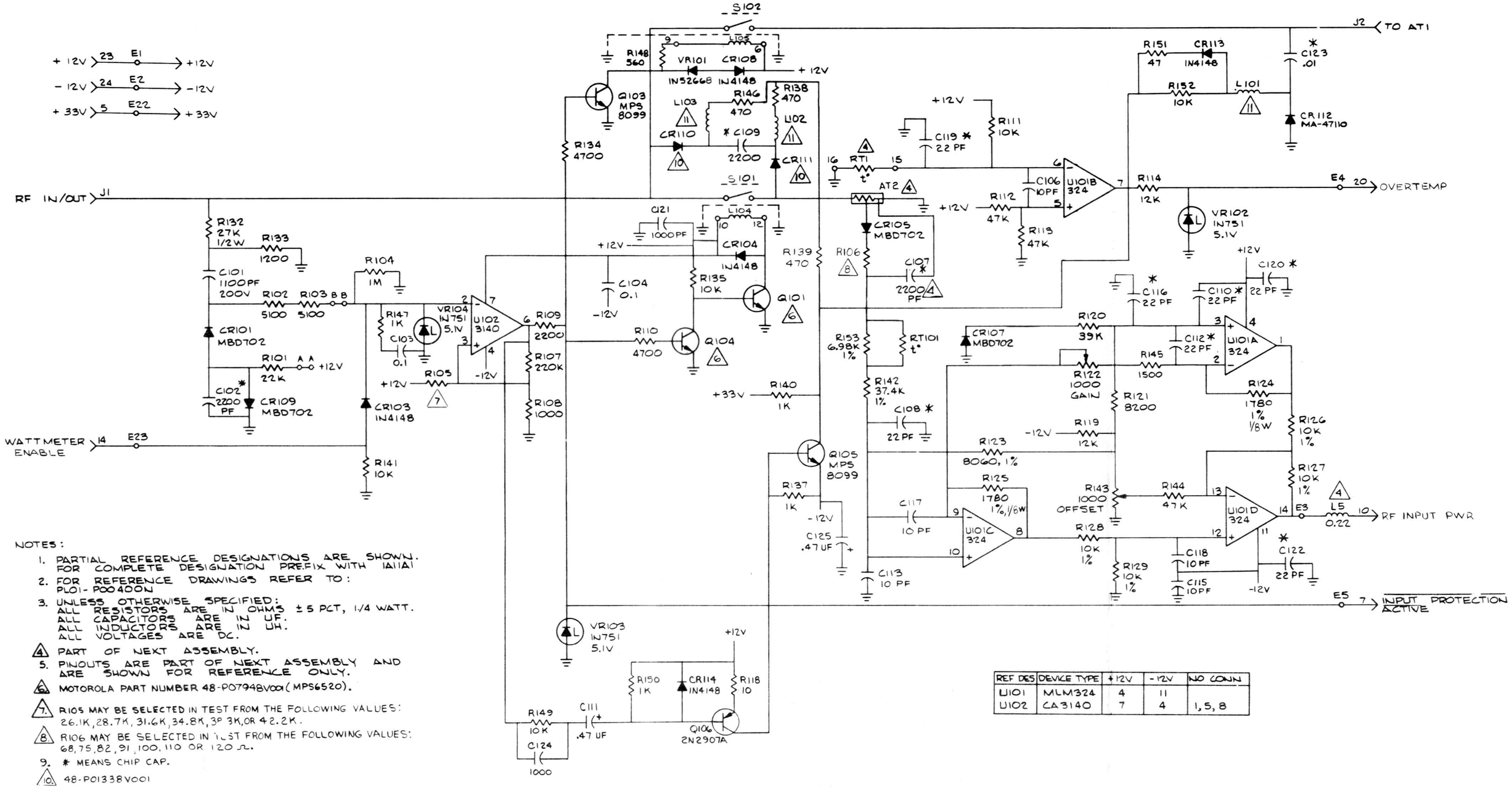

REF DES	DEVICE TYPE	+12V	-12V	NO CONN
U101	MLM324	4	11	
U102	CA3140	7	4	1, 5, 8

NOTES:

1. PARTIAL REFERENCE DESIGNATIONS ARE SHOWN. FOR COMPLETE DESIGNATION PREFIX WITH 1A11A1
2. FOR REFERENCE DRAWINGS REFER TO: PL01-P00400N
3. UNLESS OTHERWISE SPECIFIED: ALL RESISTORS ARE IN OHMS ±5 PCT, 1/4 WATT. ALL CAPACITORS ARE IN UF. ALL INDUCTORS ARE IN UH. ALL VOLTAGES ARE DC.
4. PART OF NEXT ASSEMBLY.
5. PINOUTS ARE PART OF NEXT ASSEMBLY AND ARE SHOWN FOR REFERENCE ONLY.
6. MOTOROLA PART NUMBER 48-P07948V001 (MPS6520).
7. R105 MAY BE SELECTED IN TEST FROM THE FOLLOWING VALUES: 26.1K, 28.7K, 31.6K, 34.8K, 38.3K, OR 42.2K.
8. R106 MAY BE SELECTED IN TEST FROM THE FOLLOWING VALUES: 68, 75, 82, 91, 100, 110 OR 120 Ω.
9. * MEANS CHIP CAP.
10. 48-P01338V001
11. 24C83961B01

Figure 17-5. RF Input/Wattmeter PWB A11A1 Schematic Diagram

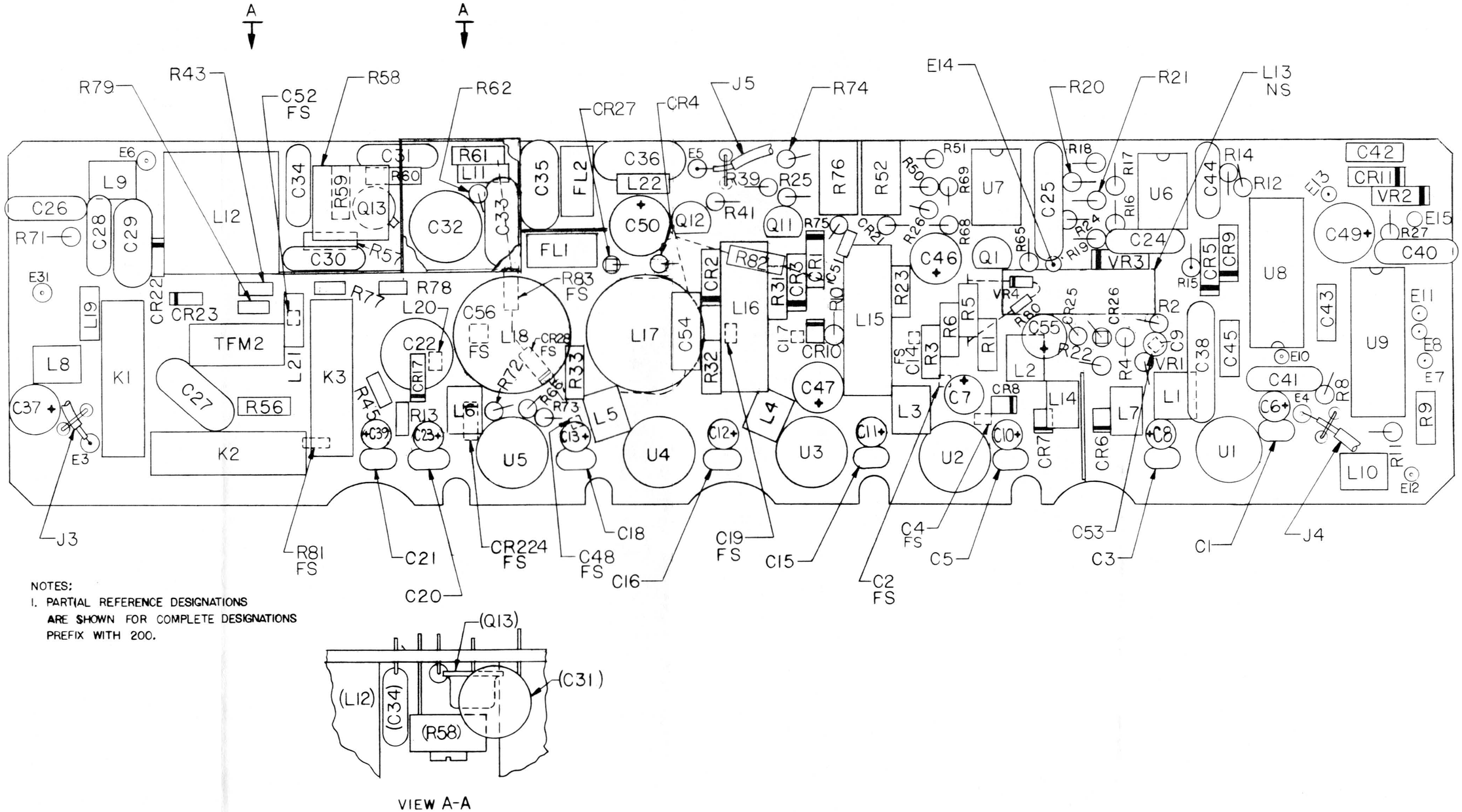

NOTES:
1. PARTIAL REFERENCE DESIGNATIONS ARE SHOWN FOR COMPLETE DESIGNATIONS PREFIX WITH 200.

VIEW A-A

Figure 17-8. RF Converter/Wideband Amplifier A11A2 (RTC-4015B) Parts Location Diagram

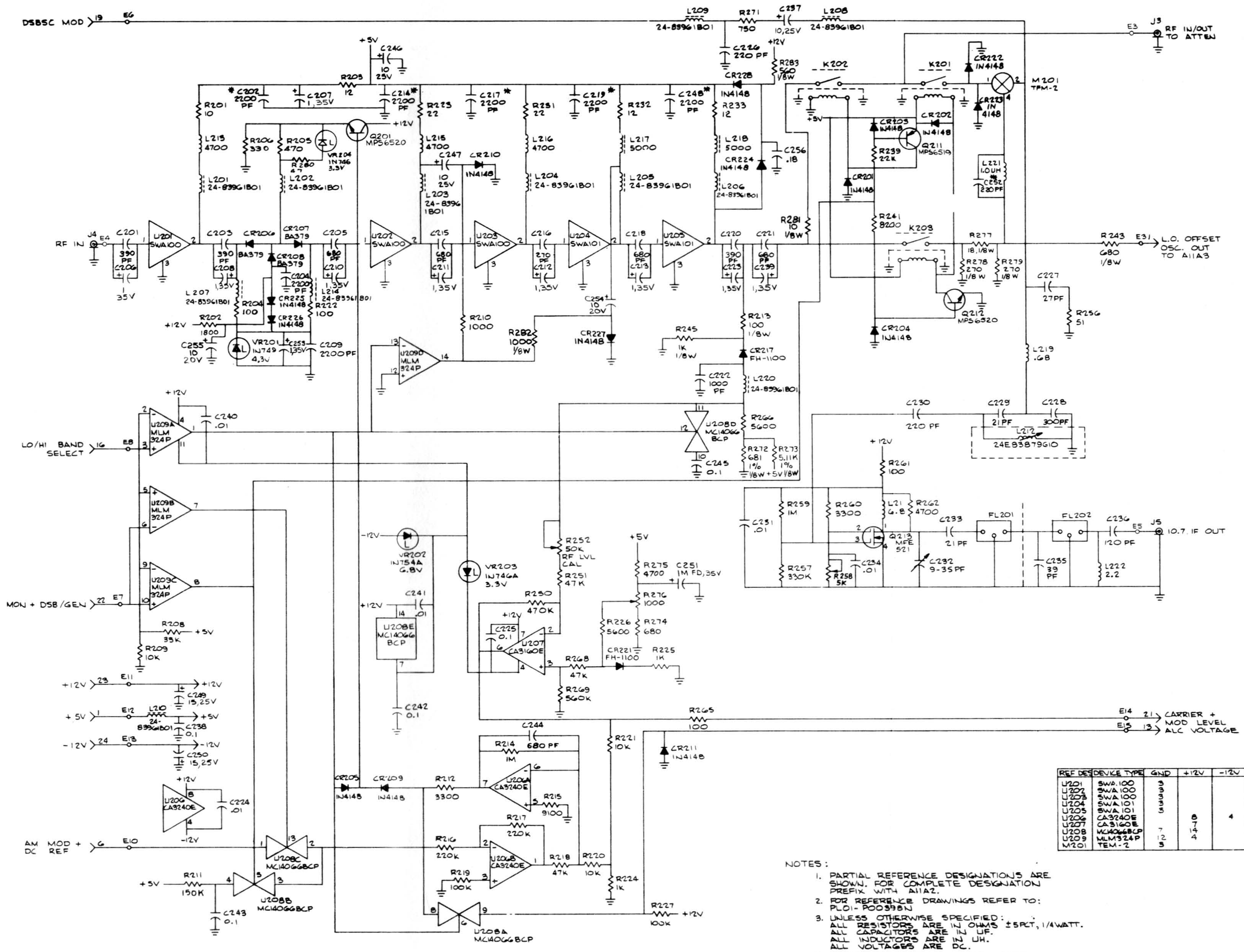

REF DES	DEVICE TYPE	GND	+12V	-12V	NO CONN
U201	SWA100	3			
U202	SWA100	3			
U203	SWA100	3			
U204	SWA101	3			
U205	SWA101	3			
U206	CA3240E	8	4		
U207	CA3160E	7			1,5,8
U208	MC14066BCP	7	14		
U209	MLM324P	12	4		
M201	TEM-2	3			

NOTES:

1. PARTIAL REFERENCE DESIGNATIONS ARE SHOWN. FOR COMPLETE DESIGNATION PREFIX WITH A11A2.
2. FOR REFERENCE DRAWINGS REFER TO: PL01-P003981N
3. UNLESS OTHERWISE SPECIFIED: ALL RESISTORS ARE IN OHMS ±5PCT, 1/4WATT. ALL CAPACITORS ARE IN UF. ALL INDUCTORS ARE IN UH. ALL VOLTAGES ARE DC.
4. PINOUTS ARE THOSE OF THE NEXT ASSY AND ARE SHOWN FOR REFERENCE ONLY.
5. * DENOTES CHIP CAP

Figure 17-7. RF Converter/Wideband Amplifier A11A2 Schematic Diagram

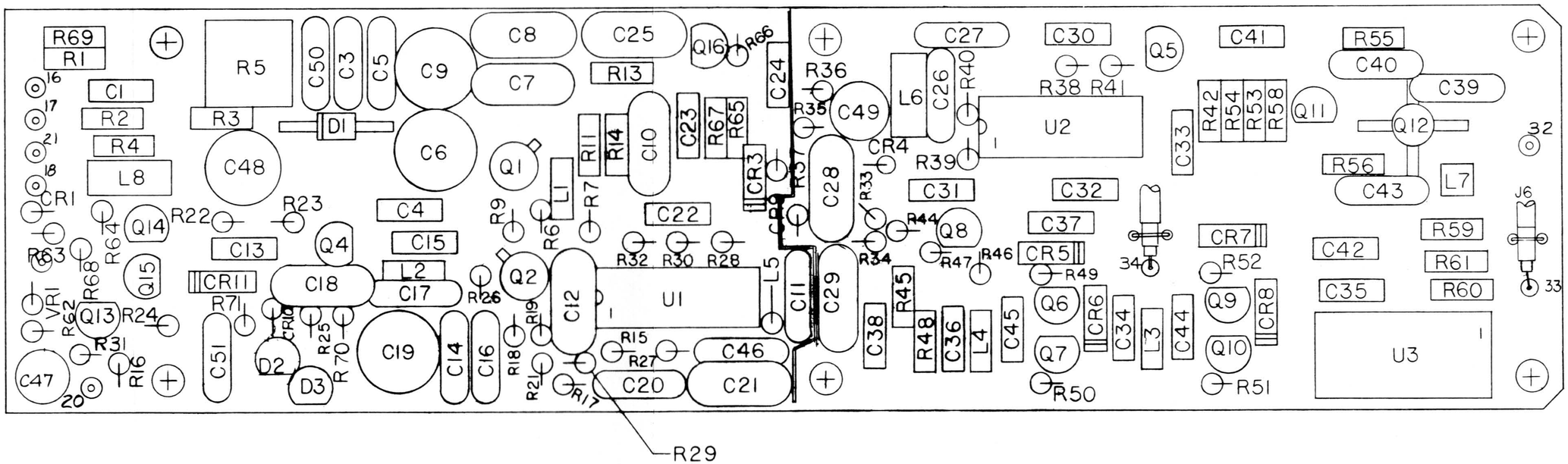

Figure 17-10. Offset Generator A11A3 (RTC-4016B) Parts Location Diagram

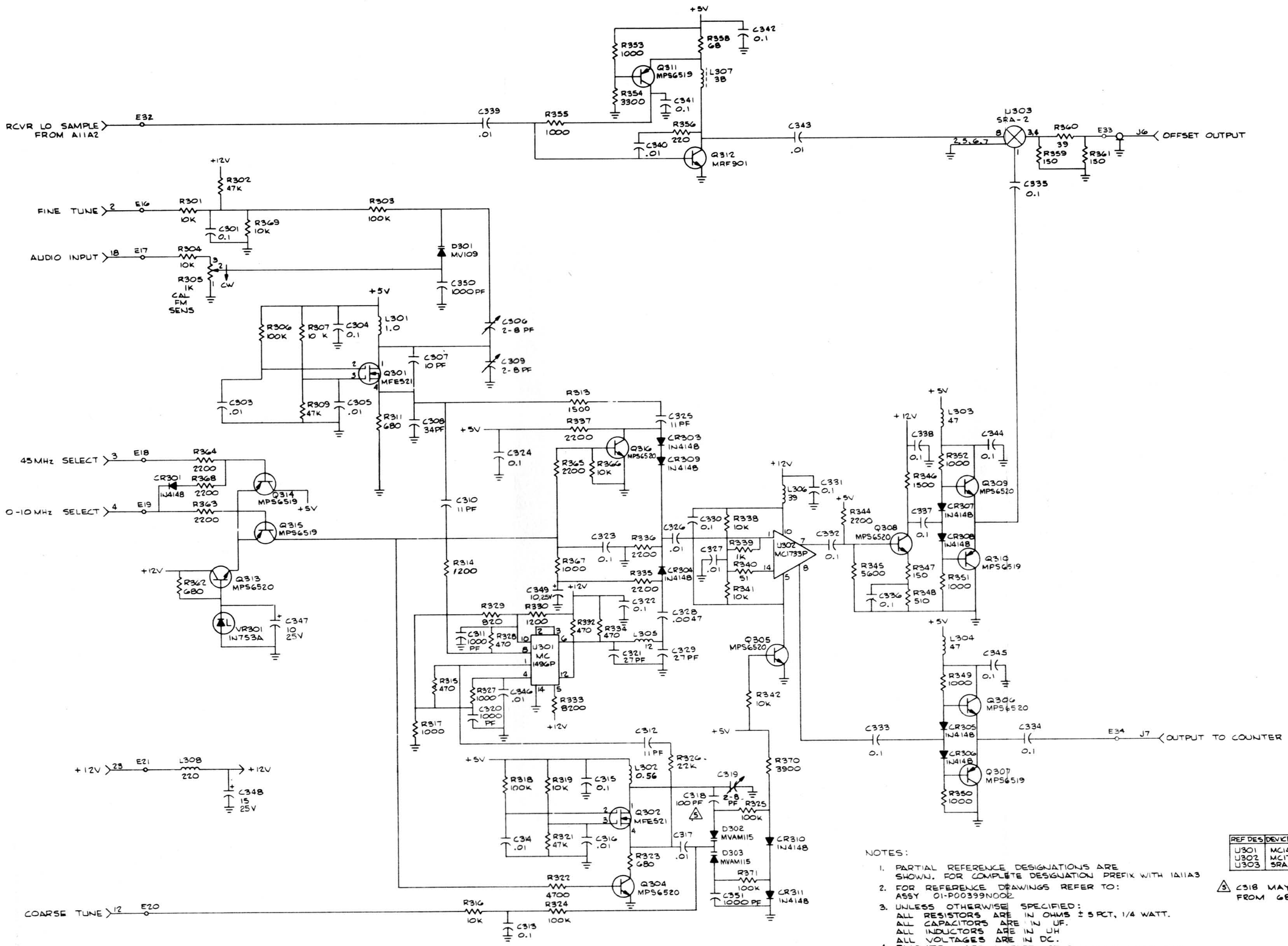

NOTES:

1. PARTIAL REFERENCE DESIGNATIONS ARE SHOWN. FOR COMPLETE DESIGNATION PREFIX WITH 1A11A3
2. FOR REFERENCE DRAWINGS REFER TO: ASSY 01-P00399N002
3. UNLESS OTHERWISE SPECIFIED:
   ALL RESISTORS ARE IN OHMS ± 5 PCT, 1/4 WATT.
   ALL CAPACITORS ARE IN UF.
   ALL INDUCTORS ARE IN UH
   ALL VOLTAGES ARE IN DC.
4. PINOUTS ARE A PART OF THE NEXT ASSEMBLY AND ARE SHOWN FOR REFERENCE ONLY.

REF DES	DEVICE TYPE	GND	NO CONN
U301	MC1496P	14	7,9,11,13
U302	MC1733P		2,3,4,6,9,11,12,13
U303	SRA-2	2,5,6,7	

5 C318 MAY BE SELECTED IN TEST FROM 68, 100 OR 120 PF.

Figure 17-9. Offset Generator A11A3 Schematic Diagram

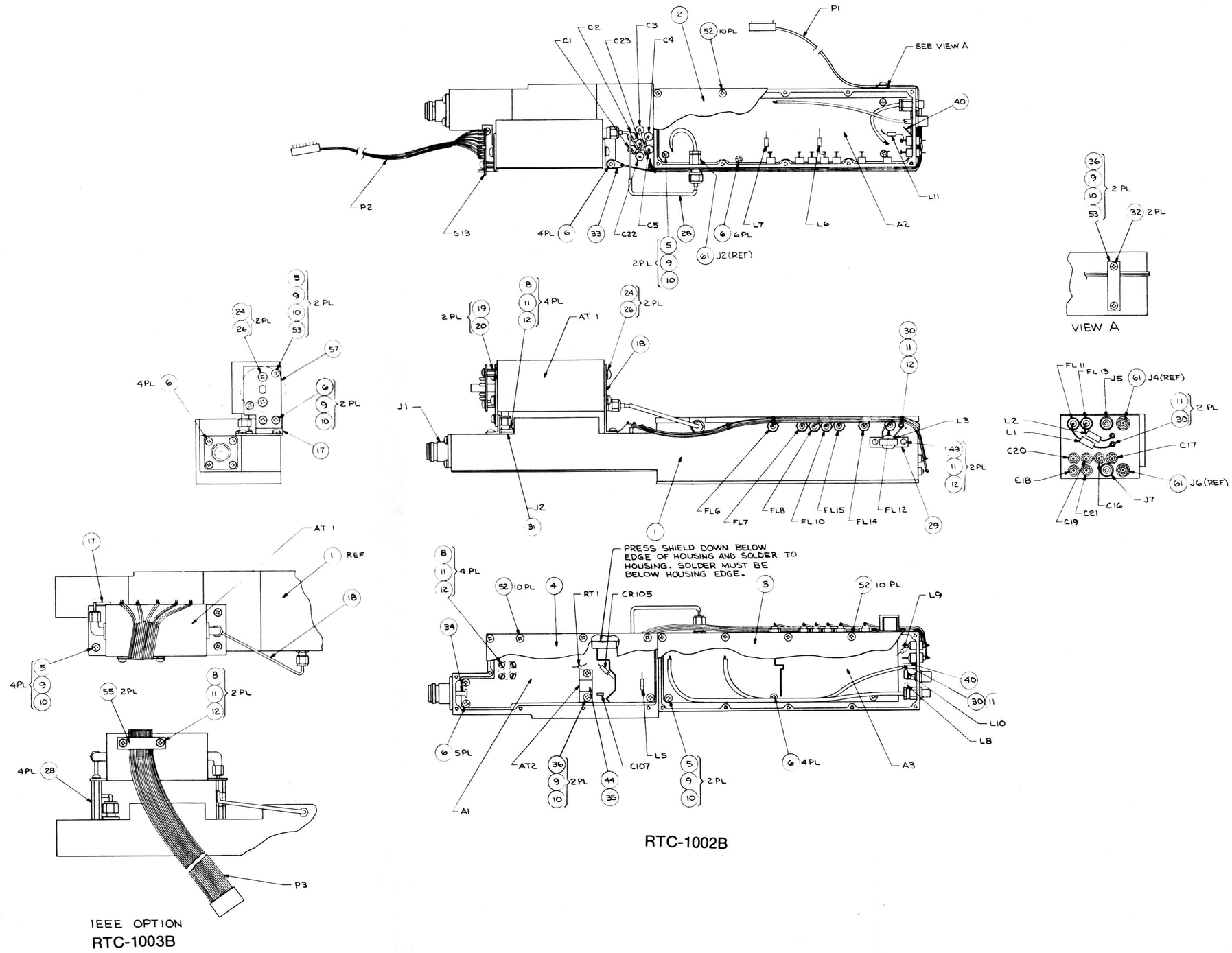

Figure 17-4. RF Input Module A11 (RTC-1002B) Parts Location Diagram (Sheet 1 of 2)

Find No.	Qty. Req.	Part No.	Nomenclature	Part Value
		RTC-1002B	RF INPUT MODULE	
001	1	27-80335A30	HOUSING,RF FRONTEND	
002	1	15-80346A62	COVER,MODULE	OFFSET GENERATOR
003	1	15-80331A83	COVER,MOD,WIDE-BAND A	
004	1	15-80335A33	COVER,MODULE-RF	PROTECTION-WATTMETER
005	8	MS35206-213	SCREW,PH	4-40X.250
006	23	03-P07961V024	SCREW,MACH,SEMS PH EX	4-40X.312
008	8	03-15013G11	SCREW,PH	2-56X.312
009	12	MS35338-40	WASHER,LOCK	NO.4
010	12	MS27183-3	WASHER,FLAT	NO.4
011	14	MS35338-39	WASHER,LOCK	NO.2
012	11	NAS620C2	WASHER,FLAT	NO.2
013	AR	SN63WRMAP3	SOLDER	
014	AR	11-14167A01	INK	BLACK
015	AR	30-84421F13	CABLE,RF	WHITE
016	AR		WIRE	22 WHT
017	1	07-P01328V001	BRACKET,FRONT ATT	
018	1	07-P00209N001	BRACKET,REAR ATT	
019	2	2053-440-SS-20	SPACER	
020	2	MS24693-S1	SCREW,FH	4-40X3/16
024	4	MS35206-226	SCREW	6-32X.250
026	4	MS35338-41	WASHER,LOCK	NO.6
027	AR	8-2	EPOXY,ABELSTIK	
028	1	1-80304A45	CABLE ASSEMBLY	
029	1	07-P00318N001	BRACKET,CHOKE MNTG	
030	4	29-14070A91	TERMINAL	
031	1	43-P06840R001	SPACER,CONNECTOR	
032	2	42-P06849R001	STRAP,CLAMP,CABLE	
033	1	29-15122A05	TERMINAL,LUG	
034	1	29-P06850R001	TERMINAL,SOLDER	
035	AR	G-642	COMPOUND,THERMAL	
036	4	MS35206-215	SCREW	4-40X.375
037	AR	M23053/5-103-9	INSULATION SLEEVING	.093 WHT
039	AR		TAPE	NATURAL
040	2	813	TERMINAL LUG,NO.12	.018 BRASS HOT TIN
042	AR		WIRE,BUS	24
043	AR		INSULATION SLEEVING	22 WHT
044	1	26-P00346N001	SHIELD,AT2 CHEM MILL	
047	AR	SN62WRMAP3	SOLDER	
048	AR		COMPOUND,THD LKG,BLUETYPE II,GR N242	
049	2	03-15013G09	SCREW	2-56X.187
052	30	MS24693-S2	SCREW	4-40X1/4
053	4	5610-21-31	WASHER	N0.4
055	AR	MS3367-4-9	STRAP	NATURAL
057	1	64-P01327V001	PLATE,FRONT ATTENUATO	
058	AR	11-P14386A001	ADHESIVE,EPOXY	CHEMLOK 305
061	3	1214-5	WASHER,INT LOCK	1/4
A 001	1	RTL-4061B	RF PROTECTION & PWR M	
A 002	1	RTC-4015B	RF CONV/WB AMPL PWB A	
A 003	1	RTC-4016B	OFFSET GENERATOR	

Find No.	Qty. Req.	Part No.	Nomenclature	Part Value
AT001	1	58-80335A47	ATTENUATOR	
AT002	1	58-80348A80	TERMINATION,RF	50OHM
C 001	1	8-80331A29	CAPACITOR	5000PF-GMV-500
C 002	1	8-80331A29	CAPACITOR	5000PF-GMV-500
C 003	1	8-80331A29	CAPACITOR	5000PF-GMV-500
C 004	1	8-80331A29	CAPACITOR	5000PF-GMV-500
C 005	1	8-80331A29	CAPACITOR	5000PF-GMV-500
C 016	1	8-80331A29	CAPACITOR	5000PF-GMV-500
C 017	1	8-80370A38	CAPACITOR	1000PF-20-500
C 018	1	8-80331A29	CAPACITOR	5000PF-GMV-500
C 019	1	8-80331A29	CAPACITOR	5000PF-GMV-500
C 020	1	8-80331A29	CAPACITOR	5000PF-GMV-500
C 021	1	8-80331A29	CAPACITOR	5000PF-GMV-500
C 022	1	8-80331A29	CAPACITOR	5000PF-GMV-500
C 023	1	8-80331A29	CAPACITOR	5000PF-GMV-500
C 107	1	21-80370A08	CAPACITOR	2200PF-20-100
CR105	1	48-80345A64	DIODE	
FL006	1	91-80346A12	FILTER	
FL007	1	91-80346A12	FILTER	
FL008	1	91-80346A12	FILTER	
FL010	1	91-80346A12	FILTER	
FL011	1	91-80346A12	FILTER	
FL012	1	91-80346A12	FILTER	
FL013	1	91-80346A12	FILTER	
FL014	1	91-80346A12	FILTER	
FL015	1	91-80346A12	FILTER	
J 001	1	9-80331A68	CONNECTOR,RF	TYPE N
J 002	1	9-80331A76	CONNECTOR,RF	
J 005	1	9C84135B02	JACK,PHONO	
J 007	1	9C84135B02	JACK,PHONO	
L 001	1	24-80348A83	COIL	470UH
L 002	1	24-80348A83	COIL	470UH
L 003	1	25-83127G01	CHOKE	
L 005	1	24-80369A25	COIL	.22UH
L 006	1	24-80369A23	COIL	.15UH-10
L 007	1	24-80369A23	COIL	.15UH-10
L 008	1	24-80369A23	COIL	.15UH-10
L 009	1	24-80369A23	COIL	.15UH-10
L 010	1	24-80369A23	COIL	.15UH-10
L 011	1	24-80369A23	COIL	.15UH-10
P 001	1	1-80304A53	CABLE ASSEMBLY	24PIN-181N-SIDE
P 002	1	1-80304A54	CABLE ASSEMBLY	16PIN-101N-END
RT001	1	06C83600K05	THERMISTOR	
S 013	1	40-80335A74	WAFER,SWITCH	

Figure 17-4. RF Input Module A11 (RTC-1002B) Parts Location Diagram (Sheet 2 of 2)

Find No.	Qty. Req.	Part No.	Nomenclature	Part Value
		RTL-4061B	RF IN/WATT MTR PROT	
001	1	84-80335A19	PWB, RF PROT & PWR ME	
002	AR	SN63WRMAP3	SOLDER	
003	AR	SN63WRP3	SOLDER	
004	AR	SN62WRMAP3	SOLDER	
005	AR	11-14167A01	INK	BLACK
007	1	26-P00347N001	SHIELD,RF FENCE CHEM-	
008	AR		WIRE	24 WHT
009	AR	M23053/5-106-9	INSULATION SLEEVING	.250 WHT
010	AR	01-P00400N010	STRAP,ALLOY 110 COPPE	.002 THICK,QQ-C-576
011	2	39-P00219N001	SLEEVE	
C 101	1	21D83596E32	CAPACITOR	1100PF-5-200
C 102	1	21-80370A24	CAPACITOR	2200PF-20-100
C 103	1	21-80369A82	CAPACITOR	.1UF-20-100
C 104	1	21-80369A82	CAPACITOR	.1UF-20-100
C 106	1	21-80348A96	CAPACITOR	10PF-10-200
C 108	1	21-80370A14	CAPACITOR	22PF-5-100
C 109	1	21-80370A24	CAPACITOR	2200PF-20-100
C 110	1	21-80370A14	CAPACITOR	22PF-5-100
C 111	1	23D84762H14	CAPACITOR	.47UF-20-50
C 112	1	21-80370A14	CAPACITOR	22PF-5-100
C 113	1	21-80348A96	CAPACITOR	10PF-10-200
C 115	1	21-80348A96	CAPACITOR	10PF-10-200
C 116	1	21-80370A14	CAPACITOR	22PF-5-100
C 117	1	21-80348A96	CAPACITOR	10PF-10-200
C 118	1	21-80348A96	CAPACITOR	10PF-10-200
C 119	1	21-80370A14	CAPACITOR	22PF-5-100
C 120	1	21-80370A14	CAPACITOR	22PF-5-100
C 121	1	21D82187B14	CAPACITOR	1000PF-10-100
C 122	1	21-80370A14	CAPACITOR	22PF-5-100
C 123	1	21-80370A26	CAPACITOR	.01UF-20-50
C 124	1	21D82187B14	CAPACITOR	1000PF-10-100
C 125	1	23D84762H14	CAPACITOR	.47UF-20-50
CR101	1	48-80345A64	DIODE	
CR103	1	48-84463K02	DIODE	
CR104	1	48-84463K02	DIODE	
CR107	1	48-80345A64	DIODE	
CR108	1	48-84463K02	DIODE	
CR109	1	48-80345A64	DIODE	
CR110	1	48-80368A96	DIODE	SCREENED
CR111	1	48-80368A96	DIODE	SCREENED
CR112	1	48-80368A93	DIODE	
CR113	1	48-84463K02	DIODE	
CR114	1	48-84463K02	DIODE	
L 101	1	24C83961B01	CHOKE	
L 102	1	24C83961B01	CHOKE	
L 103	1	24C83961B01	CHOKE	
L 104	1	24-80369A45	COIL,RELAY	
L 105	1	24-80369A45	COIL,RELAY	
Q 101	1	48-80368A91	TRANSISTOR	MPS6520 SCREENED
Q 103	1	48-80345A51	TRANSISTOR	
Q 104	1	48-80368A91	TRANSISTOR	MPS6520 SCREENED
Q 105	1	48-80345A51	TRANSISTOR	
Q 106	1	48-6123A22	TRANSISTOR	
R 101	1	6S124A81	RESISTOR	22K-5-1/4
R 102	1	6S124A66	RESISTOR	5.1K-5-1/4
R 103	1	6S124A66	RESISTOR	5.1K-5-1/4
R 104	1	6S124B22	RESISTOR	1M-5-1/4
R 105	S01	6-10621D44	RESISTOR	34.8K-1-1/8
R 105	S01	6-10621D32	RESISTOR	26.1K-1-1/8
R 105	S01	6-10621D36	RESISTOR	28.7K-1-1/8
R 105	1	6-10621D40	RESISTOR	31.6K-1-1/8 NOMINAL
R 105	S01	6-10621D48	RESISTOR	38.3K-1-1/8
R 105	S01	6-10621D52	RESISTOR	42.2K-1-1/8
R 106	S01	6S124A23	RESISTOR	82-5-1/4
R 106	S01	6S124A21	RESISTOR	68-5-1/4
R 106	S01	6S124A22	RESISTOR	75-5-1/4
R 106	S01	6S124A24	RESISTOR	91-5-1/4
R 106	1	6S124A25	RESISTOR	100-5-1/4 NOMINAL
R 106	S01	6S124A26	RESISTOR	110-5-1/4
R 106	S01	6S124A27	RESISTOR	120-5-1/4
R 107	1	6S124B06	RESISTOR	220K-5-1/4
R 108	1	6S124A49	RESISTOR	1K-5-1/4
R 109	1	6S124A57	RESISTOR	2.2K-5-1/4
R 110	1	6S124A65	RESISTOR	4.7K-5-1/4
R 111	1	6S124A73	RESISTOR	10K-5-1/4
R 112	1	6S124A89	RESISTOR	47K-5-1/4
R 113	1	6S124A89	RESISTOR	47K-5-1/4
R 114	1	6S124A75	RESISTOR	12K-5-1/4
R 118	1	6S124A01	RESISTOR	10-5-1/4
R 119	1	6S124A75	RESISTOR	12K-5-1/4
R 120	1	6S124A87	RESISTOR	39K-5-1/4
R 121	1	6S124A71	RESISTOR	8.2K-5-1/4
R 122	1	18D83452F09	RESISTOR,VARIABLE	1K
R 123	1	06D83175C90	RESISTOR	8.06K-1-1/4
R 124	1	6-20621C19	RESISTOR	1780-1-1/8
R 125	1	6-20621C19	RESISTOR	1780-1-1/8
R 126	1	06D83175C03	RESISTOR	10K-1-1/4
R 127	1	06D83175C03	RESISTOR	10K-1-1/4
R 128	1	06D83175C03	RESISTOR	10K-1-1/4
R 129	1	06D83175C03	RESISTOR	10K-1-1/4
R 132	1	6S125A83	RESISTOR	27K-5-1/2
R 133	1	6S124A51	RESISTOR	1.2K-5-1/4
R 134	1	6S124A65	RESISTOR	4.7K-5-1/4
R 135	1	6S124A73	RESISTOR	10K-5-1/4
R 137	1	6S124A49	RESISTOR	1K-5-1/4
R 138	1	6S124A41	RESISTOR	470-5-1/4
R 139	1	6S124A41	RESISTOR	470-5-1/4
R 140	1	6S124A49	RESISTOR	1K-5-1/4
R 141	1	6S124A73	RESISTOR	10K-5-1/4
R 142	1	06D83175C51	RESISTOR	37.4K-1-1/4
R 143	1	18D83452F09	RESISTOR,VARIABLE	1K
R 144	1	6S124A89	RESISTOR	47K-5-1/4
R 145	1	6S124A53	RESISTOR	1.5K-5-1/4
R 146	1	6S124A41	RESISTOR	470-5-1/4
R 147	1	6S124A49	RESISTOR	1K-5-1/4
R 148	1	6S124A43	RESISTOR	560-5-1/4
R 149	1	6S124A73	RESISTOR	10K-5-1/4
R 150	1	6S124A49	RESISTOR	1K-5-1/4
R 151	1	6S124A17	RESISTOR	47-5-1/4
R 152	1	6S124A73	RESISTOR	10K-5-1/4
R 153	1	06D83175C88	RESISTOR	
RT101	1	06C83600K05	THERMISTOR	
S 101	1	40-84200B02	SWITCH,RF	
S 102	1	40-84200B02	SWITCH,RF	
U 101	1	51-80368A64	INTEGRATED CIRCUIT	LM324N SCREENED
U 102	1	51-80345A01	INTEGRATED CIRCUIT	CA3140E SCREENED
VR101	1	48-80345A84	DIODE,ZENER	
VR102	1	48-86850C13	DIODE,ZENER	5.1V-5-.4
VR103	1	48-86850C13	DIODE,ZENER	5.1V-5-.4
VR104	1	48-86850C13	DIODE,ZENER	5.1V-5-.4

Figure 17-6. RF Input/Wattmeter A11A1 (RTL-4061B) Parts Location Diagram

Find No.	Qty. Req.	Part No.	Nomenclature	Part Value
001	1	84-80335A17	PWB, RF CONV/WB AMPL	
002	AR	SN62WRMAP3	SOLDER	
003	AR	11-14167A01	INK	BLACK
004	AR	SN63WRP3	SOLDER	
005	AR	SN63WRMAP3	SOLDER	
006	1	26-P00234N001	SHIELD,CAN	
007	1	26-P00235N001	SHIELD,FILTER	
008	AR	RTV3145	ADHESIVE,SILICONE	
009	1	26-P06855R001	SHIELD	
010	AR	M23053/5-105-9	INSULATING SLEEVING	.187 WHT
011	AR	30-84421F13	CABLE,RF	WHITE
012	AR		WIRE,BUS	22
013	AR		INSULATION SLEEVING	20 WHT
014	AR		INSULATION SLEEVING	24 WHT
015	1	26-P04143T001	SHIELD	
016	AR		INSULATION SLEEVING	22 WHT
017	AR	M23053/5-103-C	INSULATION SLEEVING	.093 CLR
C 201	1	21-80370A28	CAPACITOR	390PF-20-50
C 202	1	21-80370A24	CAPACITOR	2200PF-20-100
C 203	1	21-80370A28	CAPACITOR	390PF-20-50
C 204	1	21-80370A24	CAPACITOR	2200PF-20-100
C 205	1	21-80370A29	CAPACITOR	680PF-20-50
C 206	1	23D83441B15	CAPACITOR	1.0UF-20-35
C 207	1	23D83441B15	CAPACITOR	1.0UF-20-35
C 208	1	23D83441B15	CAPACITOR	1.0UF-20-35
C 209	1	21-80370A24	CAPACITOR	2200PF-20-100
C 210	1	23D83441B15	CAPACITOR	1.0UF-20-35
C 211	1	23D83441B15	CAPACITOR	1.0UF-20-35
C 212	1	23D83441B15	CAPACITOR	1.0UF-20-35
C 213	1	23D83441B15	CAPACITOR	1.0UF-20-35
C 214	1	21-80370A24	CAPACITOR	2200PF-20-100
C 215	1	21-80370A29	CAPACITOR	680PF-20-50
C 216	1	21-80370A27	CAPACITOR	270PF-20-50
C 217	1	21-80370A24	CAPACITOR	2200PF-20-100
C 218	1	21-80370A29	CAPACITOR	680PF-20-50
C 219	1	21-80370A24	CAPACITOR	2200PF-20-100
C 220	1	21-80370A28	CAPACITOR	390PF-20-50
C 221	1	21-80370A29	CAPACITOR	680PF-20-50
C 222	1	21-80369A81	CAPACITOR	1000PF100-0-500V
C 223	1	23D83441B15	CAPACITOR	1.0UF-20-35
C 224	1	21D82428B59	CAPACITOR	.01UF-2080-200
C 225	1	21-80369A82	CAPACITOR	.1UF-20-100
C 226	1	21D82187B08	CAPACITOR	220PF-10-500
C 227	1	21D84494B42	CAPACITOR	27PF-5-500
C 228	1	21-80369A92	CAPACITOR	330PF-5-300
C 229	1	21D84494B40	CAPACITOR	21PF-5-500
C 230	1	21D82187B08	CAPACITOR	220PF-10-500
C 231	1	21D82428B62	CAPACITOR	.01UF80-20-200
C 232	1	CV31D350	CAPACITOR	9 TO 35PF-200
C 233	1	21D84494B40	CAPACITOR	21PF-5-500

Find No.	Qty. Req.	Part No.	Nomenclature	Part Value
C 234	1	21D82428B59	CAPACITOR	.01UF-2080-200
C 235	1	21D84494B24	CAPACITOR	39PF-5-500
C 236	1	21D84494B06	CAPACITOR	120PF-5-500
C 237	1	23D84665F01	CAPACITOR	10UF-25V
C 238	1	21-80369A82	CAPACITOR	.1UF-20-100
C 239	1	23D83441B15	CAPACITOR	1.0UF-20-35
C 240	1	21D82428B59	CAPACITOR	.01UF-2080-200
C 241	1	21D82428B59	CAPACITOR	.01UF-2080-200
C 242	1	21-80369A82	CAPACITOR	.1UF-20-100
C 243	1	21-80369A82	CAPACITOR	.1UF-20-100
C 244	1	21-80369A98	CAPACITOR	680PF-10-200
C 245	1	21-80369A82	CAPACITOR	.1UF-20-100
C 246	1	23D84665F01	CAPACITOR	10UF-25V
C 247	1	23D84665F01	CAPACITOR	10UF-25V
C 248	1	21-80370A24	CAPACITOR	2200PF-20-100
C 249	1	23D84665F02	CAPACITOR	15UF-25V
C 250	1	23D84665F02	CAPACITOR	15UF-25V
C 251	1	23D83441B15	CAPACITOR	1.0UF-20-35
C 252	1	21-80370A15	CAPACITOR	220PF-2-100
C 253	1	23D83441B15	CAPACITOR	1.0UF-20-35
C 254	1	23-80369A63	CAPACITOR	10UF-10-20
C 255	1	23D84665F01	CAPACITOR	10UF-10100-25
C 256	1	23-80369A58	CAPACITOR	.18UF-10-50
CR201	1	48-84463K02	DIODE	
CR202	1	48-84463K02	DIODE	
CR203	1	48-84463K02	DIODE	
CR204	1	48-84463K02	DIODE	
CR205	1	48-84463K02	DIODE	
CR206	1	48-80345A62	DIODE	
CR207	1	48-80345A62	DIODE	
CR208	1	48-80345A62	DIODE	
CR209	1	48-84463K02	DIODE	
CR210	1	48-84463K02	DIODE	
CR211	1	48-84463K02	DIODE	
CR217	1	48-80310A74	DIODE	FH-1100 SCREENED
CR221	1	48-80310A74	DIODE	FH-1100 SCREENED
CR222	1	48-84463K02	DIODE	
CR223	1	48-84463K02	DIODE	
CR224	1	48-84463K02	DIODE	
CR225	1	48-84463K02	DIODE	
CR226	1	48-84463K02	DIODE	
CR227	1	48-84463K02	DIODE	
CR228	1	48-84463K02	DIODE	
FL201	1	48-80346A10	FILTER	
FL202	1	48-80346A10	FILTER	
J 003	1	9-80331A72-02	CONNECTOR,RF	
J 004	1	9-80331A72-02	CONNECTOR,RF	
K 201	1	80-80346A02	RELAY	
K 202	1	80-80346A02	RELAY	
K 203	1	80-80346A02	RELAY	

Figure 17-8. RF Converter/Wideband Amplifier A11A2 (RTC-4015B) Parts Location Diagram

Find No.	Qty. Req.	Part No.	Nomenclature	Part Value
L 201	1	24C83961B01	CHOKE,RF	
L 202	1	24C83961B01	CHOKE,RF	
L 203	1	24C83961B01	CHOKE,RF	
L 204	1	24C83961B01	CHOKE,RF	
L 205	1	24C83961B01	CHOKE,RF	
L 206	1	24C83961B01	CHOKE,RF	
L 207	1	24C83961B01	CHOKE,RF	
L 208	1	24C83961B01	CHOKE,RF	
L 209	1	24C83961B01	CHOKE,RF	
L 210	1	24C83961B01	CHOKE,RF	
L 211	1	24-80369A28	COIL,RF	6.8UH
L 212	1	24E83879G10	CHOKE,VARIABLE	
L 213	1	24-80369A44	COIL	4700UH
L 214	1	24C83961B01	CHOKE,RF	
L 215	1	24-80369A44	COIL	4700UH
L 216	1	24-80369A44	COIL	4700UH
L 217	1	24-80369A47	CHOKE	5000UH
L 218	1	24-80369A47	CHOKE	5000UH
L 219	1	24-80369A191	COIL	.68UH
L 220	1	24C83961B01	CHOKE	
L 221	1	24-80369A15	COIL	1.0UH-5
L 222	1	24-80369A32	COIL	2.2UH
M 201	1	51-80346A05	MIXER	
Q 201	1	48-80368A91	TRANSISTOR	MPS6520 SCREENED
Q 211	1	48-80368A92	TRANSISTOR	MPS6519 SCREENED
Q 212	1	48-80368A91	TRANSISTOR	MPS6520 SCREENED
Q 213	1	MFE521	TRANSISTOR	
R 201	1	6S124A01	RESISTOR	10-5-1/4
R 202	1	6S124A55	RESISTOR	1.8K-5-1/4
R 203	1	6S124A03	RESISTOR	12-5-1/4
R 204	1	6S124A25	RESISTOR	100-5-1/4
R 205	1	6S124A41	RESISTOR	470-5-1/4
R 206	1	6S124A37	RESISTOR	330-5-1/4
R 208	1	6S124A85	RESISTOR	33K-5-1/4
R 209	1	6S124A73	RESISTOR	10K-5-1/4
R 210	1	6S124A49	RESISTOR	1K-5-1/4
R 211	1	6S124B02	RESISTOR	150K-5-1/4
R 212	1	6S124A61	RESISTOR	3.3K-5-1/4
R 213	1	6S185A25	RESISTOR	100-5-1/8
R 214	1	6S124B22	RESISTOR	1M-5-1/4
R 215	1	6S124A72	RESISTOR	9.1K-5-1/4
R 216	1	6S124B06	RESISTOR	220K-5-1/4
R 217	1	6S124B06	RESISTOR	220K-5-1/4
R 218	1	6S124A89	RESISTOR	47K-5-1/4
R 219	1	6S124A97	RESISTOR	100K-5-1/4
R 220	1	6S124A73	RESISTOR	10K-5-1/4
R 221	1	6S124A73	RESISTOR	10K-5-1/4
R 222	1	6S124A25	RESISTOR	100-5-1/4
R 223	1	6S124A09	RESISTOR	22-5-1/4
R 224	1	6S124A49	RESISTOR	1K-5-1/4
R 225	1	6S124A49	RESISTOR	1K-5-1/4
R 226	1	6S124A67	RESISTOR	5.6K-5-1/4
R 227	1	6S124A97	RESISTOR	100K-5-1/4
R 231	1	6S124A09	RESISTOR	22-5-1/4
R 232	1	6S124A03	RESISTOR	12-5-1/4
R 233	1	6S124A03	RESISTOR	12-5-1/4
R 239	1	6S124A81	RESISTOR	22K-5-1/4
R 241	1	6S124A71	RESISTOR	8.2K-5-1/4
R 243	1	6S185A45	RESISTOR	680-5-1/8
R 245	1	6S185A49	RESISTOR	1K-5-1/8
R 250	1	6S124B14	RESISTOR	470K-5-1/4
R 251	1	6S124A89	RESISTOR	47K-5-1/4
R 252	1	18D83452F17	RESISTOR,VARIABLE	50K
R 256	1	6S124A18	RESISTOR	51-5-1/4
R 257	1	6S124B10	RESISTOR	330K-5-1/4
R 258	1	18-80370A37	RESISTOR,VARIABLE	5K
R 259	1	6S124B22	RESISTOR	1M-5-1/4
R 260	1	6S124A61	RESISTOR	3.3K-5-1/4
R 261	1	6S124A25	RESISTOR	100-5-1/4
R 262	1	6S124A65	RESISTOR	4.7K-5-1/4
R 265	1	6S124A25	RESISTOR	100-5-1/4
R 266	1	6S124A67	RESISTOR	5.6K-5-1/4
R 268	1	6S124A89	RESISTOR	47K-5-1/4
R 269	1	6S124B16	RESISTOR	560K-5-1/4
R 271	1	6S124A46	RESISTOR	750-5-1/4
R 272	1	6-10621B78	RESISTOR	681-1-1/8
R 273	1	6-10621C63	RESISTOR	5.11K-1-1/8
R 274	1	6S124A45	RESISTOR	680-5-1/4
R 275	1	6S124A65	RESISTOR	4.7K-5-1/4
R 276	1	18D83452F09	RESISTOR,VARIABLE	1K
R 277	1	6S185A07	RESISTOR	18-5-1/8
R 278	1	6S185A35	RESISTOR	270-5-1/8
R 279	1	6S185A35	RESISTOR	270-5-1/8
R 280	1	6S124A17	RESISTOR	47-5-1/4
R 281	1	6S185A01	RESISTOR	10-5-1/8
R 282	1	6S124A49	RESISTOR	1K-5-1/4
R 283	1	6S185A43	RESISTOR	560-5-1/8
U 201	1	51-80368A06	INTEGRATED CIRCUIT	SWA100 SCREENED
U 202	1	51-80368A06	INTEGRATED CIRCUIT	SWA100 SCREENED
U 203	1	51-80368A06	INTEGRATED CIRCUIT	SWA100 SCREENED
U 204	1	51-80368A07	INTEGRATED CIRCUIT	SWA101 SCEREENED
U 205	1	51-80368A07	INTEGRATED CIRCUIT	SWA101 SCREENED
U 206	1	51-80345A04	INTEGRATED CIRCUIT	CA3240E SCREENED
U 207	1	51-80345A02	INTEGRATED CIRCUIT	CA3160E SCREENED
U 208	1	51-80368A40	INTEGRATED CIRCUIT	MC14066BCP SCREENED
U 209	1	51-80368A64	INTEGRATED CIRCUIT	LM324N SCREENED
VR201	1	48-83461E13	DIODE,ZENER	
VR202	1	48-80345A92A	DIODE, ZENER	6.8V-5-.4
VR203	1	48-83624E52	DIODE, ZENER	
VR204	1	48-83624E52	DIODE,ZENER	

Figure 17-8. RF Converter/Wideband Amplifier A11A2 (RTC-4015B) Parts Location Diagram

Find No.	Qty. Req.	Part No.	Nomenclature	Part Value
		RTC-4016B	OFFSET GENERATOR	
001	1	84-80335A18	PWB OFFSET GENERATOR	
002	AR	SN63WRMAP3	SOLDER	
003	AR	11-14167A01	INK	BLACK
004	AR	SN63WRP3	SOLDER	
005	1	26-P00345N001	SHIELD	
006	AR	M23053/5-105-9	INSULATING SLEEVING	.187 WHT
007	AR	30-84421F13	CABLE,RF	WHITE
C 301	1	21-80369A82	CAPACITOR	.1UF-20-100
C 303	1	21D82428B59	CAPACITOR	.01UF-2080-200
C 304	1	21-80369A82	CAPACITOR	.1UF-20-100
C 305	1	21D82428B59	CAPACITOR	.01UF-2080-200
C 306	1	CV31A080	CAPACITOR,VARIABLE	2 TO 8PF-350
C 307	1	21K840811	CAPACITOR	10PF-N470
C 308	1	21D84494B30	CAPACITOR	34PF-5-500
C 309	1	CV31A080	CAPACITOR,VARIABLE	2 TO 8PF-350
C 310	1	21D84494B37	CAPACITOR	11PF-5-500
C 311	1	21D82187B14	CAPACITOR	1000PF-10-100
C 312	1	21D84494B37	CAPACITOR	11PF-5-500
C 313	1	21-80369A82	CAPACITOR	.1UF-20-100
C 314	1	21D82428B59	CAPACITOR	.01UF-2080-200
C 315	1	21-80369A82	CAPACITOR	.1UF-20-100
C 316	1	21D82428B59	CAPACITOR	.01UF-2080-200
C 317	1	21D82428B59	CAPACITOR	.01UF-2080-200
C 318	S01	21D84494B34	CAPACITOR	68PF-5-500
C 318	1	21D84494B04	CAPACITOR	100PF-5-500 NOMINAL
C 318	S01	21D84494B06	CAPACITOR	120PF-5-500
C 319	1	CV31A080	CAPACITOR,VARIABLE	2 T0 8PF-350
C 320	1	21D82187B14	CAPACITOR	1000PF-10-100
C 321	1	21D84494B42	CAPACITOR	27PF-5-500
C 322	1	21-80369A82	CAPACITOR	.1UF-20-100
C 323	1	21-80369A82	CAPACITOR	.1UF-20-100
C 324	1	21-80369A82	CAPACITOR	.1UF-20-100
C 325	1	21D84494B37	CAPACITOR	11PF-5-500
C 326	1	21D82428B59	CAPACITOR	.01UF-2080-200
C 327	1	21D82428B59	CAPACITOR	.01UF-2080-200
C 328	1	21D82428B09	CAPACITOR	4700PF-10-100
C 329	1	21D84494B42	CAPACITOR	27PF-5-500
C 330	1	21-80369A82	CAPACITOR	.1UF-20-100
C 331	1	21-80369A82	CAPACITOR	.1UF-20-100
C 332	1	21-80369A82	CAPACITOR	.1UF-20-100
C 333	1	21-80369A82	CAPACITOR	.1UF-20-100
C 334	1	21-80369A82	CAPACITOR	.1UF-20-100
C 335	1	21-80369A82	CAPACITOR	.1UF-20-100
C 336	1	21-80369A82	CAPACITOR	.1UF-20-100
C 337	1	21-80369A82	CAPACITOR	.1UF-20-100
C 338	1	21-80369A82	CAPACITOR	.1UF-20-100
C 339	1	21D82428B59	CAPACITOR	.01UF-2080-200
C 340	1	21D82428B59	CAPACITOR	.01UF-2080-200
C 341	1	21-80369A82	CAPACITOR	.1UF-20-100
C 342	1	21-80369A82	CAPACITOR	.1UF-20-100
C 343	1	21D82428B59	CAPACITOR	.01UF-2080-200
C 344	1	21-80369A82	CAPACITOR	.1UF-20-100
C 345	1	21-80369A82	CAPACITOR	.1UF-20-100
C 346	1	21D82428B59	CAPACITOR	.01UF-2080-200

Find No.	Qty. Req.	Part No.	Nomenclature	Part Value
C 347	1	23D84665F01	CAPACITOR	10UF-25V
C 348	1	23D84665F02	CAPACITOR	15UF-25V
C 349	1	23D84665F01	CAPACITOR	10UF-25V
C 350	1	21D82187B14	CAPACITOR	1000PF-10-100
C 351	1	21D82187B14	CAPACITOR	1000PF-10-100
CR301	1	48-84463K02	DIODE	
CR303	1	48-84463K02	DIODE	
CR304	1	48-84463K02	DIODE	
CR305	1	48-84463K02	DIODE	
CR306	1	48-84463K02	DIODE	
CR307	1	48-84463K02	DIODE	
CR308	1	48-84463K02	DIODE	
CR309	1	48-84463K02	DIODE	
CR310	1	48-84463K02	DIODE	
CR311	1	48-84463K02	DIODE	
D 301	1	48-80345A74	VARACTOR	
D 302	1	48-80345A72	VARACTOR	
D 303	1	48-80345A72	VARACTOR	
J 006	1	9-80331A72-02	CONNECTOR	
L 301	1	24-80369A193	COIL	1UH
L 302	1	24-80369A190	COIL	.56UH
L 303	1	24-80369A33	COIL	47UH
L 304	1	24-80369A33	COIL	47UH
L 305	1	24-80369A30	COIL	12UH
L 306	1	24-80369A36	COIL	39UH
L 307	1	24C83961B01	CHOKE,RF	
L 308	1	24-80369A38	COIL	220UH
Q 301	1	MFE521	TRANSISTOR	
Q 302	1	MFE521	TRANSISTOR	
Q 304	1	48-80368A91	TRANSISTOR	MPS6520 SCREENED
Q 305	1	48-80368A91	TRANSISTOR	MPS6520 SCREENED
Q 306	1	48-80368A91	TRANSISTOR	MPS6520 SCREENED
Q 307	1	48-80368A92	TRANSISTOR	MPS6519 SCREENED
Q 308	1	48-80368A91	TRANSISTOR	MPS6520 SCREENED
Q 309	1	48-80368A91	TRANSISTOR	MPS6520 SCREENED
Q 310	1	48-80368A92	TRANSISTOR	MPS6519 SCREENED
Q 311	1	48-80368A92	TRANSISTOR	MPS6519 SCREENED
Q 312	1	48R00869870	TRANSISTOR	
Q 313	1	48-80368A91	TRANSISTOR	MPS6520 SCREENED
Q 314	1	48-80368A92	TRANSISTOR	MPS6519 SCREENED
Q 315	1	48-80368A92	TRANSISTOR	MPS6519 SCREENED
Q 316	1	48-80368A91	TRANSISTOR	MPS6520 SCREENED
R 301	1	6S124A73	RESISTOR	10K-5-1/4
R 302	1	6S124A89	RESISTOR	47K-5-1/4
R 303	1	6S124A97	RESISTOR	100K-5-1/4
R 304	1	6S124A73	RESISTOR	10K-5-1/4
R 305	1	18D83452F10	RESISTOR,VARIABLE	1K
R 306	1	6S124A97	RESISTOR	100K-5-1/4
R 307	1	6S124A73	RESISTOR	10K-5-1/4
R 309	1	6S124A89	RESISTOR	47K-5-1/4
R 311	1	6S124A45	RESISTOR	680-5-1/4
R 313	1	6S124A53	RESISTOR	1.5K-5-1/4
R 314	1	6S124A51	RESISTOR	1.2K-5-1/4
R 315	1	6S124A41	RESISTOR	470-5-1/4
R 316	1	6S124A73	RESISTOR	10K-5-1/4

Find No.	Qty. Req.	Part No.	Nomenclature	Part Value
R 317	1	6S124A49	RESISTOR	1K-5-1/4
R 318	1	6S124A97	RESISTOR	100K-5-1/4
R 319	1	6S124A73	RESISTOR	10K-5-1/4
R 321	1	6S124A89	RESISTOR	47K-5-1/4
R 322	1	6S124A65	RESISTOR	4.7K-5-1/4
R 323	1	6S124A45	RESISTOR	680-5-1/4
R 324	1	6S124A97	RESISTOR	100K-5-1/4
R 325	1	6S124A97	RESISTOR	100K-5-1/4
R 326	1	6S124A81	RESISTOR	22K-5-1/4
R 327	1	6S124A49	RESISTOR	1K-5-1/4
R 328	1	6S124A41	RESISTOR	470-5-1/4
R 329	1	6S124A47	RESISTOR	820-5-1/4
R 330	1	6S124A51	RESISTOR	1.2K-5-1/4
R 332	1	6S124A41	RESISTOR	470-5-1/4
R 333	1	6S124A71	RESISTOR	8.2K-5-1/4
R 334	1	6S124A41	RESISTOR	470-5-1/4
R 335	1	6S124A57	RESISTOR	2.2K-5-1/4
R 336	1	6S124A57	RESISTOR	2.2K-5-1/4
R 337	1	6S124A57	RESISTOR	2.2K-5-1/4
R 338	1	6S124A73	RESISTOR	10K-5-1/4
R 339	1	6S124A49	RESISTOR	1K-5-1/4
R 340	1	6S124A18	RESISTOR	51-5-1/4
R 341	1	6S124A73	RESISTOR	10K-5-1/4
R 342	1	6S124A73	RESISTOR	10K-5-1/4
R 344	1	6S124A57	RESISTOR	2200-5-1/4
R 345	1	6S124A67	RESISTOR	5.6K-5-1/4
R 346	1	6S124A53	RESISTOR	1.5K-5-1/4
R 347	1	6S124A29	RESISTOR	150-5-1/4
R 348	1	6S124A42	RESISTOR	510-5-1/4
R 349	1	6S124A49	RESISTOR	1K-5-1/4
R 350	1	6S124A49	RESISTOR	1K-5-1/4
R 351	1	6S124A49	RESISTOR	1K-5-1/4
R 352	1	6S124A49	RESISTOR	1K-5-1/4
R 353	1	6S124A49	RESISTOR	1K-5-1/4
R 354	1	6S124A61	RESISTOR	3.3K-5-1/4
R 355	1	6S124A49	RESISTOR	1K-5-1/4
R 356	1	6S124A33	RESISTOR	220-5-1/4
R 358	1	6S124A21	RESISTOR	68-5-1/4
R 359	1	6S124A29	RESISTOR	150-5-1/4
R 360	1	6S124A15	RESISTOR	39-5-1/4
R 361	1	6S124A29	RESISTOR	150-5-1/4
R 362	1	6S124A45	RESISTOR	680-5-1/4
R 363	1	6S124A57	RESISTOR	2.2K-5-1/4
R 364	1	6S124A57	RESISTOR	2.2K-5-1/4
R 365	1	6S124A57	RESISTOR	2.2K-5-1/4
R 366	1	6S124A73	RESISTOR	10K-5-1/4
R 367	1	6S124A49	RESISTOR	1K-5-1/4
R 368	1	6S124A57	RESISTOR	2.2K-5-1/4
R 369	1	6S124A73	RESISTOR	10K-5-1/4
R 370	1	6S124A63	RESISTOR	3.9K-5-1/4
R 371	1	6S124A97	RESISTOR	100K-5-1/4
U 301	1	51-80368A70	INTEGRATED CIRCUIT	MC1496P SCREENED
U 302	1	51-80345A23	INTEGRATED CIRCUIT	MC1733CP SCREENED
U 303	1	51-80346A04	MIXER	
VR001	1	48-84302A09	DIODE,ZENER	6.2V-5-.4

Figure 17-10. Offset Generator A11A3 (RTC-4016B) Parts Location Diagram

SECTION 18

FRONT PANEL INTERFACE MODULE (A12)

18-1. GENERAL. The front panel interface module contains the input buffers for front panel control to the processor. In addition, buffering and ranging circuits for external scope vertical/horizontal, SINAD, DVM, and frequency counter inputs are in this module. A block diagram and schematic diagram of the Front Panel Interface Module is shown in figures 18-1 and 18-2, respectively.

18-2. Input Coupling and Ranging. Scope inputs to the Range Attenuator are from the front panel jack (EXT IN) or from the internal modulation sources (INT SCOPE TO RNG SW). An INT/EXT relay selects the input path. The external path may be AC or DC coupled and is also the path for external DVM, Frequency Counter, and SINAD inputs.

18-3. Four decades of attenuation from 1.0 to 0.001 are provided by the Range Attenuator. The input impedance of the attenuator is 1.0 megohm compensated for a bandwidth of 1 MHz. A unity gain buffer amp following the attenuator provides the drive for the DVM, Frequency Counter, and Scope Vertical Preamp circuits.

18-4. DVM Buffer. For DC measurements the DVM Buffer provides a 2-pole low pass filter with a minimum of 30 dB attenuation at 50 Hz. For AC measurements the bandwidth of the buffer is switched so that the attenuation at 10 kHz is less than 0.5 dB.

18-5. Frequency Counter Preamp. The Frequency Counter Preamp has sufficient gain for 30 mV rms sensitivity and provides hystersis for noise immunity.

18-6. Scope Vertical Preamp. A calibrated gain of 50 or a variable gain from 5 to 50 is provided by the Vertical Preamp. The gain is controlled from the front panel. From vertical scope positioning the DC bias point of the preamp is controlled by the front panel position control. Deflection sensitivity at the VERT FROM RNG SW output is 0.5 volt per division.

18-7. Scope Horizontal Preamp. A fixed gain of 5 in the Horizontal Preamp gives a horizontal input sensitivity of 0.1 volt per division. Horizontal vernier gain is implemented on the front panel, and horizontal positioning on the Scope Amplifier module. Deflection sensitivity at the HORIZ TO SCOPE AMPL is 0.5 volt per division.

18-8. Control and Display Interface. Front panel control information is input to the processor in 4-bit groups through the AF control bus. Priority encoders convert the multiposition switch positions (scope horizontal, frequency scan, and RF step attenuator) to 4-bit codes. The processor sequentially addresses each input buffer (AF ADRS BUS 0-3) through the Address Decoder. Data in the selected buffer is then transfered to the processor on the AF DATA BUS 0-3 lines while the $\overline{\text{AF BUS EN 2}}$ signal is low. Two additional latches provide the processor control interface for the Range Attenuator, input switching, and DVM Buffer control.

18-9. AF BUS. The AF Bus consists of 4-bit tri-state bus AF DATA BUS 0-3. Individual input/output bus locations are addressed by AF ADD BUS 0-3. When $\overline{\text{AF BUS EN 2}}$ is low, the function of the AF DATA BUS lines are determined by the address present on the AF ADD BUS lines.

18-10. LED CONTROL. Control output to the display, function, and modulation mode LEDs is by the AF BUS addressed 0, 1, and 2, respectively. Latch select outputs $\overline{\text{LS0}}$, $\overline{\text{LS1}}$, and $\overline{\text{LS2}}$ are low to latch data present on the AF DATA BUS when the corresponding address is enabled on the AF ADD BUS. These latch select outputs and the AF DATA BUS are connected to the LED display board A14A1.

SECTION 18

FRONT PANEL INTERFACE MODULE (A12)

18-1. GENERAL. The front panel interface module contains the input buffers for front panel control to the processor. In addition, buffering and ranging circuits for external scope vertical/horizontal, SINAD, DVM, and frequency counter inputs are in this module. A block diagram and schematic diagram of the Front Panel Interface Module is shown in figures 18-1 and 18-2, respectively.

18-2. Input Coupling and Ranging. Scope inputs to the Range Attenuator are from the front panel jack (EXT IN) or from the internal modulation sources (INT SCOPE TO RNG SW). An INT/EXT relay selects the input path. The external path may be AC or DC coupled and is also the path for external DVM, Frequency Counter, and SINAD inputs.

18-3. Four decades of attenuation from 1.0 to 0.001 are provided by the Range Attenuator. The input impedance of the attenuator is 1.0 megohm compensated for a bandwidth of 1 MHz. A unity gain buffer amp following the attenuator provides the drive for the DVM, Frequency Counter, and Scope Vertical Preamp circuits.

18-4. DVM Buffer. For DC measurements the DVM Buffer provides a 2-pole low pass filter with a minimum of 30 dB attenuation at 50 Hz. For AC measurements the bandwidth of the buffer is switched so that the attenuation at 10 kHz is less than 0.5 dB.

18-5. Frequency Counter Preamp. The Frequency Counter Preamp has sufficient gain for 30 mV rms sensitivity and provides hystersis for noise immunity.

18-6. Scope Vertical Preamp. A calibrated gain of 50 or a variable gain from 5 to 50 is provided by the Vertical Preamp. The gain is controlled from the front panel. From vertical scope positioning the DC bias point of the preamp is controlled by the front panel position control. Deflection sensitivity at the VERT FROM RNG SW output is 0.5 volt per division.

18-7. Scope Horizontal Preamp. A fixed gain of 5 in the Horizontal Preamp gives a horizontal input sensitivity of 0.1 volt per division. Horizontal vernier gain is implemented on the front panel, and horizontal positioning on the Scope Amplifier module. Deflection sensitivity at the HORIZ TO SCOPE AMPL is 0.5 volt per division.

18-8. Control and Display Interface. Front panel control information is input to the processor in 4-bit groups through the AF control bus. Priority encoders convert the multiposition switch positions (scope horizontal, frequency scan, and RF step attenuator) to 4-bit codes. The processor sequentially addresses each input buffer (AF ADRS BUS 0-3) through the Address Decoder. Data in the selected buffer is then transfered to the processor on the AF DATA BUS 0-3 lines while the AF BUS $\overline{\text{EN 2}}$ signal is low. Two additional latches provide the processor control interface for the Range Attenuator, input switching, and DVM Buffer control.

18-9. AF BUS. The AF Bus consists of 4-bit tri-state bus AF DATA BUS 0-3. Individual input/output bus locations are addressed by AF ADD BUS 0-3. When AF BUS $\overline{\text{EN 2}}$ is low, the function of the AF DATA BUS lines are determined by the address present on the AF ADD BUS lines.

18-10. LED CONTROL. Control output to the display, function, and modulation mode LEDs is by the AF BUS addressed 0, 1, and 2, respectively. Latch select outputs $\overline{\text{LS0}}$, $\overline{\text{LS1}}$, and $\overline{\text{LS2}}$ are low to latch data present on the AF DATA BUS when the corresponding address is enabled on the AF ADD BUS. These latch select outputs and the AF DATA BUS are connected to the LED display board A14A1.

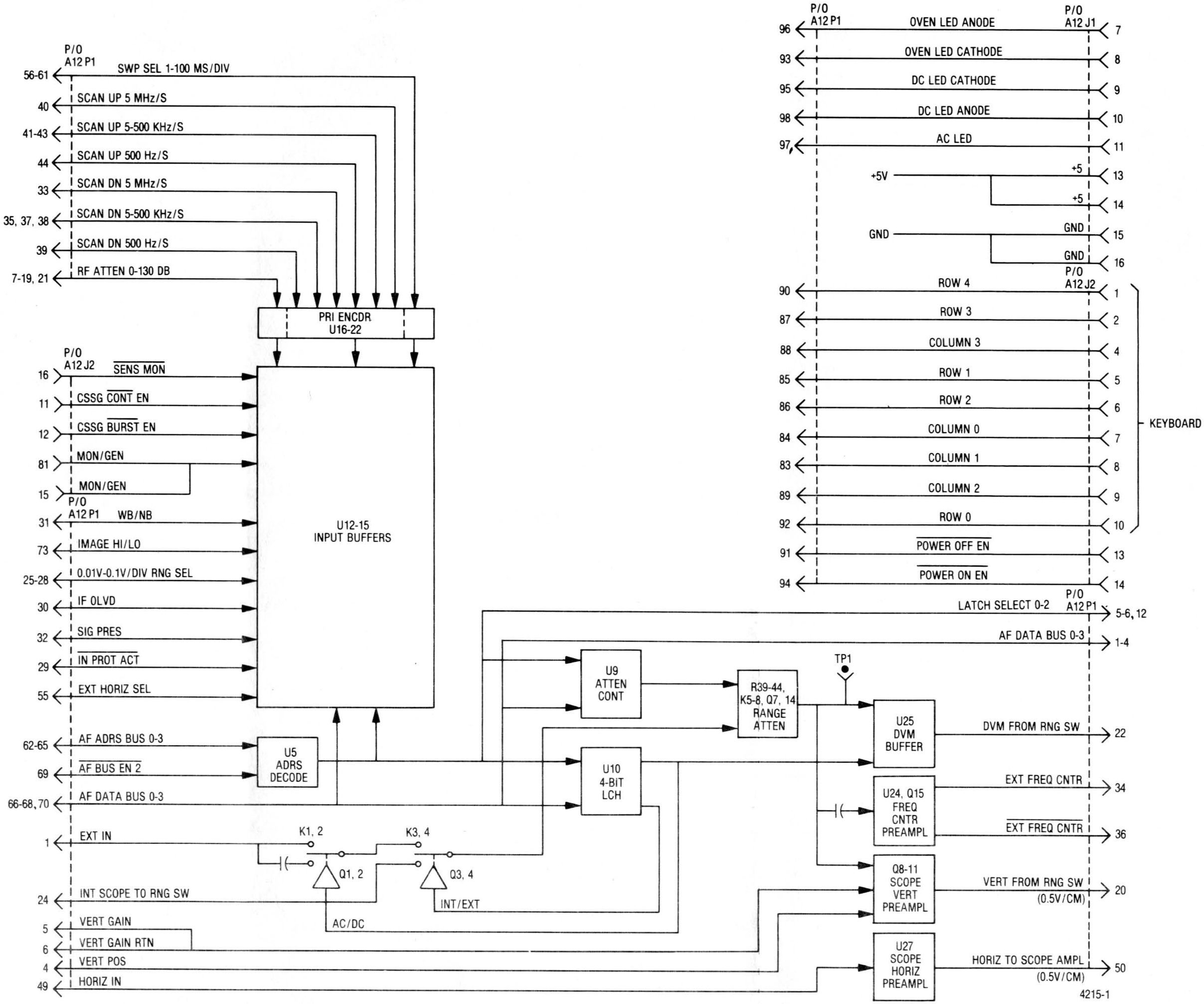

Figure 18-1. Front Panel Interface Module A12 Block Diagram

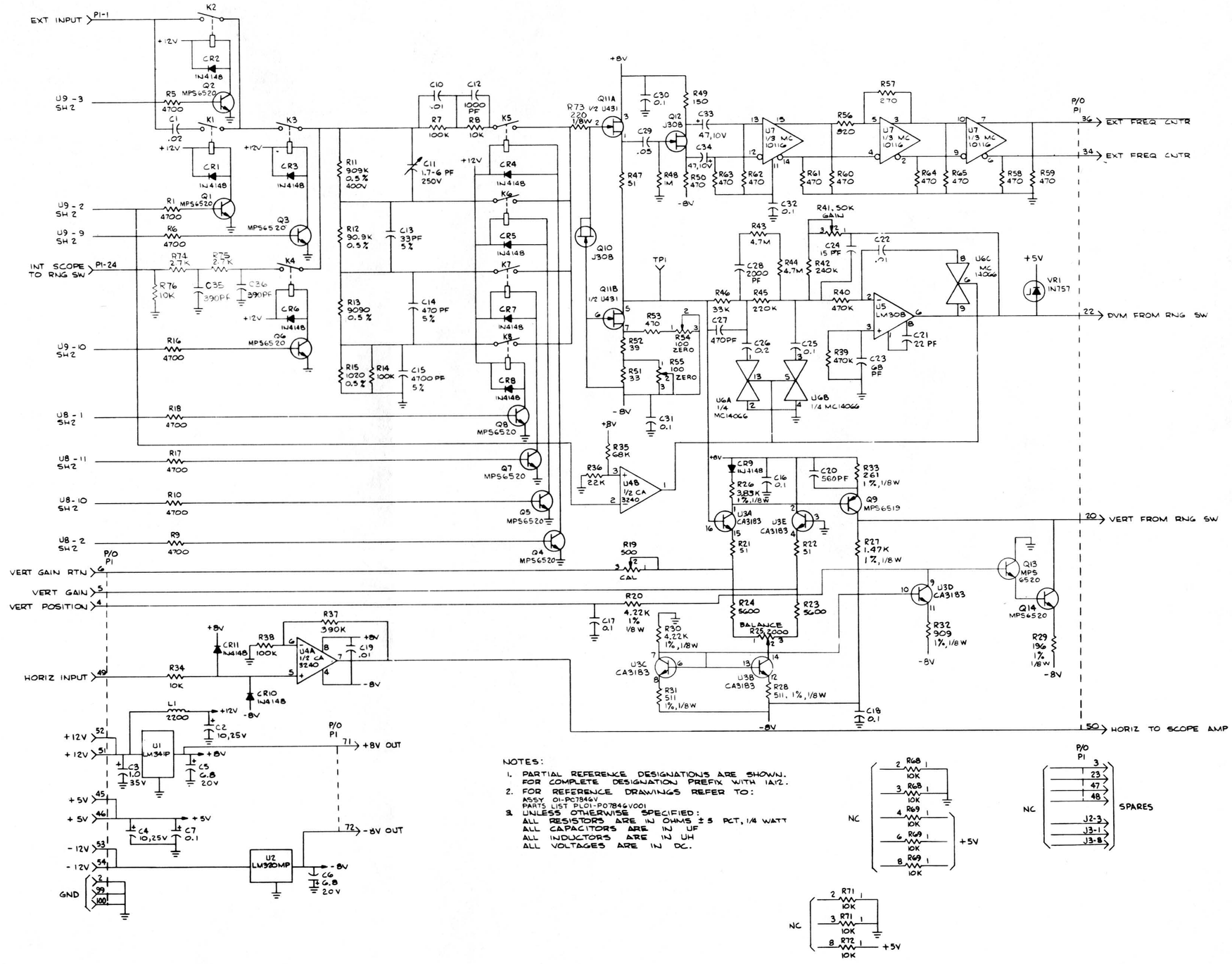

Figure 18-2. Front Panel Interface Module A12 Schematic Diagram (Sheet 1 of 2)

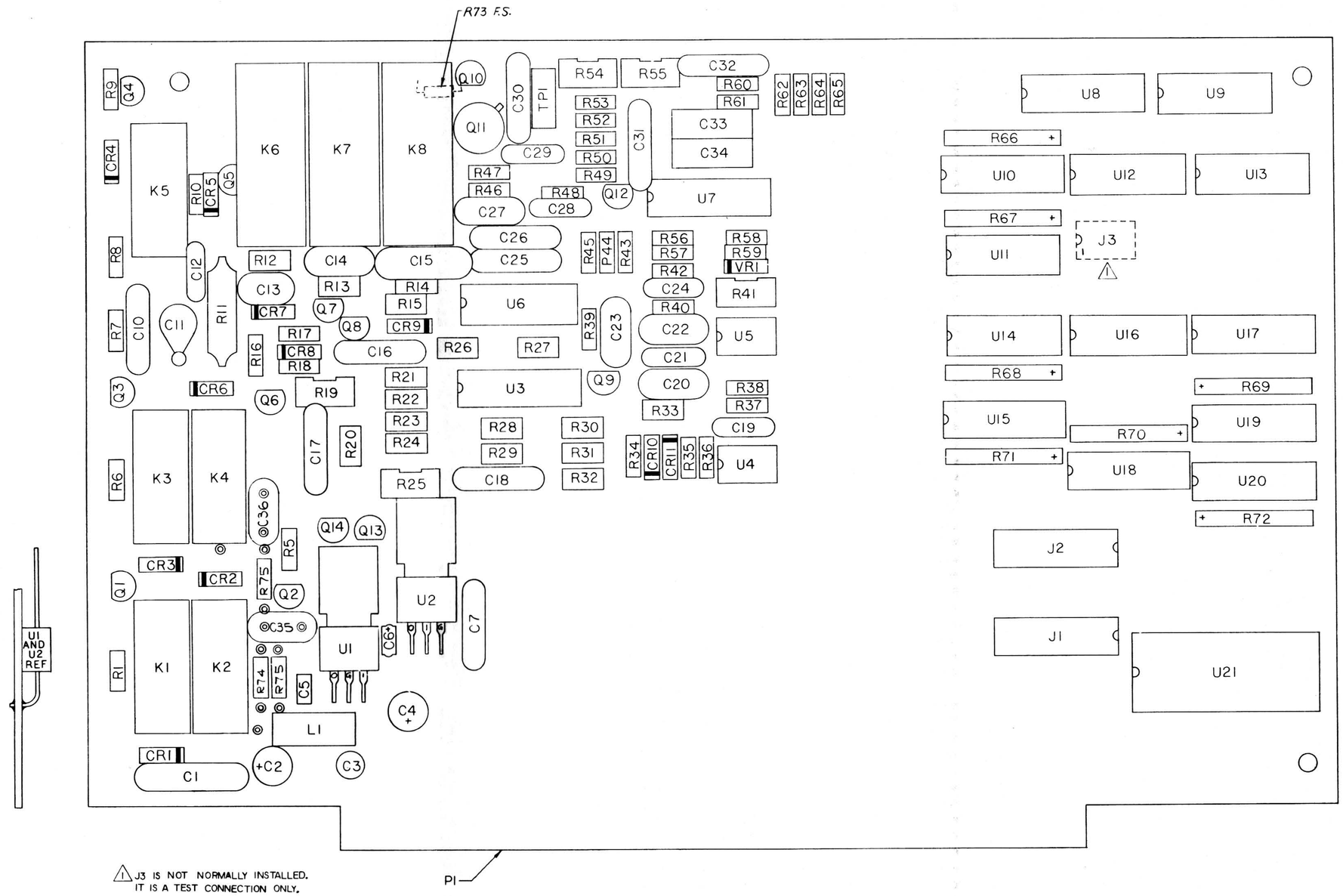

Figure 18-3. Front Panel Interface Module A12 (RTL-4086A) Parts Location Diagram (Sheet 1 of 2)

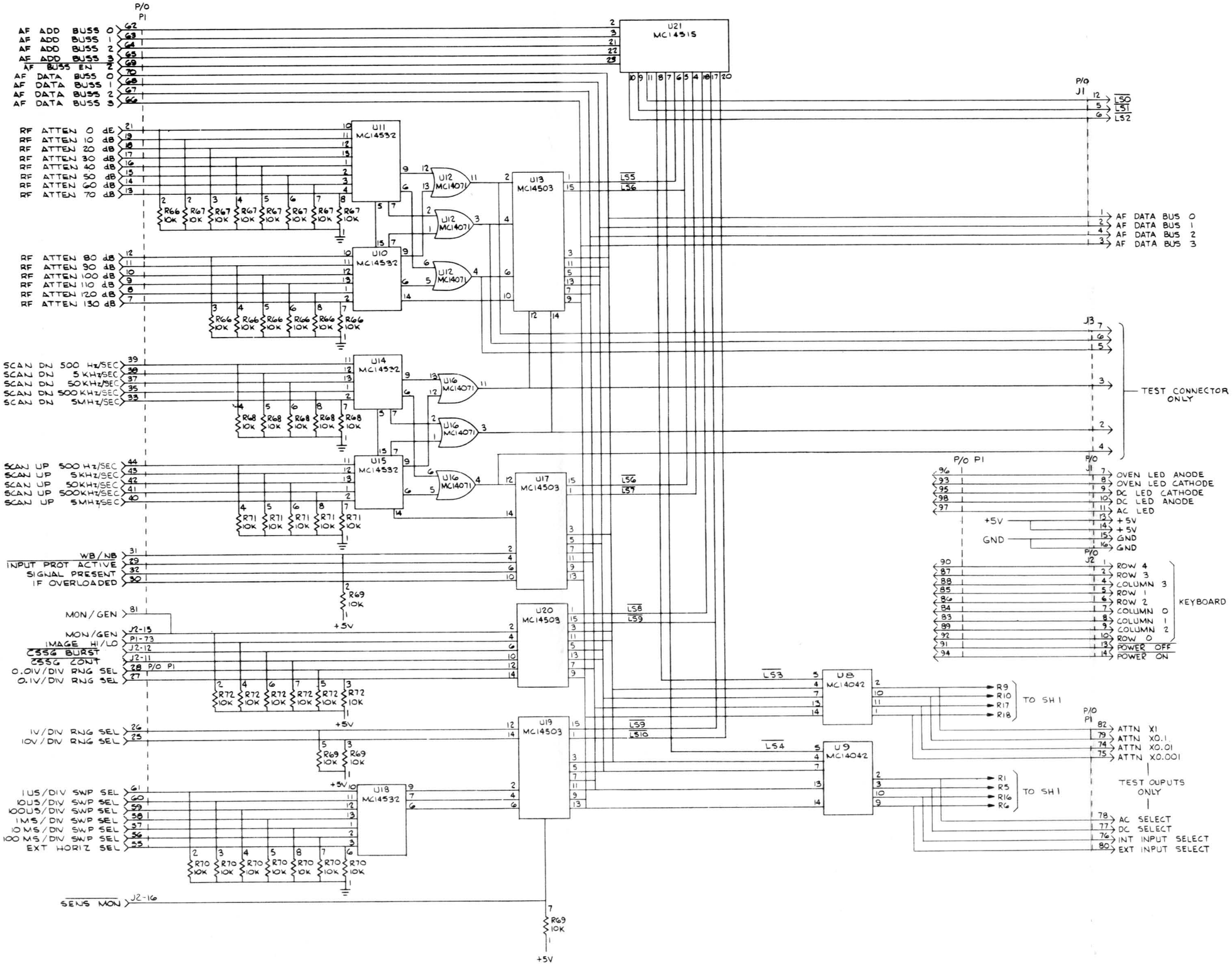

TABLE I

REF DES	DEVICE TYPE	GND	VCC PINS CONN	VCC PINS VOLTS	NO CONN
U1	341P	3	1	+12V	
U2	320MP	1	3	−12V	
U3	3183		15	−8V	
U4	3240		8/4	+8V/−8V	
U5	308		7/4	+8V/−8V	5
U6	14066	2,4,12	14/7	+8V/−8V	10,11
U7	10116	8	1,16	+5V	
U8	14042	6,8	16	+5V	3,9,12,15
U9	14042	6,8	16	+5V	1,11,12,15
U10	14532	3,4,8	5,16	+5V	
U11	14532	8	16	+5V	14,15
U12	14071	7	8,9,14	+5V	10
U13	14503	8	16	+5V	
U14	14532	3,4,8,10	16	+5V	14,15
U15	14532	3,4,8,10	5,16	+5V	
U16	14071	7	8,9,14	+5V	10
U17	14503	8	16	+5V	
U18	14532	4,8	5,14,16	+5V	15
U19	14503	8	16	+5V	
U20	14503	8	16	+5V	
U21	14515	12	1,24	+5V	13,14,15,16,19

Figure 18-2. Front Panel Interface Module A12 Schematic Diagram (Sheet 2 of 2)

Find No.	Qty. Req.	Part No.	Nomenclature	Part Value
		RTL-4086A	F/P INTERFACE	
001	1	84-P07847V001	PWB, FRONT PANEL INTR	
003	AR	SN63WRMAP3	SOLDER	
004	AR	11-14167A01	INK	BLACK
C 001	1	21K00401029	CAPACITOR	.02UF80-20-600
C 002	1	23D84665F01	CAPACITOR	10UF-25
C 003	1	23D83441B15	CAPACITOR	1.0UF-20-35
C 004	1	23D84665F01	CAPACITOR	10UF-25
C 005	1	23D82397D23	CAPACITOR	6.8UF-20-20
C 006	1	23D82397D23	CAPACITOR	6.8UF-20-20
C 007	1	21-80369A82	CAPACITOR	.1UF-20-100
C 010	1	21D82428B19	CAPACITOR	0.01UF-20-500
C 011	1	20-80370A32	CAPACITOR	1.7-6PF-250V
C 012	1	21D82187B14	CAPACITOR	1000PF-10-100
C 013	1	21-80369A90	CAPACITOR	33PF-5-500
C 014	1	21D84494B19	CAPACITOR	470PF-5-500
C 015	1	21-80369A96	CAPACITOR	4700PF-5-500
C 016	1	21-80369A82	CAPACITOR	.1UF-20-100
C 017	1	21-80369A82	CAPACITOR	.1UF-20-100
C 018	1	21-80369A82	CAPACITOR	.1UF-20-100
C 019	1	21D82428B59	CAPACITOR	.01UF-2080-200
C 020	1	21-80369A97	CAPACITOR	560PF-5-500
C 021	1	21-80369A88	CAPACITOR	22PF-5-500
C 022	1	21D82428B59	CAPACITOR	.01UF-2080-200
C 023	1	21D84494B34	CAPACITOR	68PF-5-500
C 024	1	21-80369A87	CAPACITOR	15PF-5-500
C 025	1	21-80369A82	CAPACITOR	.1UF-20-100
C 026	1	21C82372C05	CAPACITOR	.2UF80-20-25
C 027	1	21D82187B07	CAPACITOR	470PF-10-500
C 028	1	21D82428B36	CAPACITOR	2000PF-10-200
C 029	1	21C82372C10	CAPACITOR	.05UF-20-25
C 030	1	21-80369A82	CAPACITOR	.1UF-20-100
C 031	1	21-80369A82	CAPACITOR	.1UF-20-100
C 032	1	21-80369A82	CAPACITOR	.1UF-20-100
C 033	1	23D84762H18	CAPACITOR	47UF-20-10
C 034	1	23D84762H18	CAPACITOR	47UF-20-10
C 035	1	21D82187B28	CAPACITOR	390PF-10-500
C 036	1	21D82187B28	CAPACITOR	390PF-10-500
CR001	1	48-84463K02	DIODE	
CR002	1	48-84463K02	DIODE	
CR003	1	48-84463K02	DIODE	
CR004	1	48-84463K02	DIODE	
CR005	1	48-84463K02	DIODE	
CR006	1	48-84463K02	DIODE	
CR007	1	48-84463K02	DIODE	
CR008	1	48-84463K02	DIODE	
CR009	1	48-84463K02	DIODE	
CR010	1	48-84463K02	DIODE	
CR011	1	48-84463K02	DIODE	
J 001	1	09-80331A97	SOCKET,SOLDER DIP	16 PIN
J 002	1	09-80331A97	SOCKET,SOLDER DIP	16 PIN
K 001	1	80-80346A01	RELAY,REED	1A-500V
K 002	1	80-80346A01	RELAY,REED	1A-500V
K 003	1	80-80346A01	RELAY,REED	1A-500V
K 004	1	80-80346A01	RELAY,REED	1A-500V
K 005	1	80-80346A01	RELAY,REED	1A-500V
K 006	1	80D84157B01	REED RELAY	1A

Find No.	Qty. Req.	Part No.	Nomenclature	Part Value
K 007	1	80D84157B01	REED RELAY	1A
K 008	1	80D84157B01	REED RELAY	1A
L 001	1	24-80369A43	COIL	2200UH
Q 001	1	48-80368A91	TRANSISTOR	MPS6520 SCREENED
Q 002	1	48-80368A91	TRANSISTOR	MPS6520 SCREENED
Q 003	1	48-80368A91	TRANSISTOR	MPS6520 SCREENED
Q 004	1	48-80368A91	TRANSISTOR	MPS6520 SCREENED
Q 005	1	48-80368A91	TRANSISTOR	MPS6520 SCREENED
Q 006	1	48-80368A91	TRANSISTOR	MPS6520 SCREENED
Q 007	1	48-80368A91	TRANSISTOR	MPS6520 SCREENED
Q 008	1	48-80368A91	TRANSISTOR	MPS6520 SCREENED
Q 009	1	48-80368A92	TRANSISTOR	MPS6519 SCREENED
Q 010	1	48-80345A41	TRANSISTOR	
Q 011	1	48-80368A90	TRANSISTOR	
Q 012	1	48-80345A41	TRANSISTOR	
Q 013	1	48-80368A91	TRANSISTOR	MPS6520 SCREENED
Q 014	1	48-80368A91	TRANSISTOR	MPS6520 SCREENED
R 001	1	6S124A65	RESISTOR	4.7K-5-1/4
R 005	1	6S124A65	RESISTOR	4.7K-5-1/4
R 006	1	6S124A65	RESISTOR	4.7K-5-1/4
R 007	1	6S124A97	RESISTOR	100K-5-1/4
R 008	1	6S124A73	RESISTOR	10K-5-1/4
R 009	1	6S124A65	RESISTOR	4.7K-5-1/4
R 010	1	6S124A65	RESISTOR	4.7K-5-1/4
R 011	1	6-80370A43	RESISTOR	909K-.5-1W-500V
R 012	1	6-80370A41.RESISTO		90.9K-.5-1/4
R 013	1	6-80370A42.RESISTO		9090-.5-1/4
R 014	1	6S124A97	RESISTOR	100K-5-1/4
R 015	1	CMF1/10-1020-.5-T1	RESISTOR	1020-.5-1/4
R 016	1	6S124A65	RESISTOR	4.7K-5-1/4
R 017	1	6S124A65	RESISTOR	4.7K-5-1/4
R 018	1	6S124A65	RESISTOR	4.7-5-1/4
R 019	1	18D83452F07	RESISTOR,VARIABLE	500
R 020	1	6-10621C55	RESISTOR	4220-1-1/8
R 021	1	6S124A18	RESISTOR	51-5-1/4
R 022	1	6S124A18	RESISTOR	51-5-1/4
R 023	1	6S124A67	RESISTOR	5.6K-5-1/4
R 024	1	6S124A67	RESISTOR	5.6K-5-1/4
R 025	1	18D83452F01	RESISTOR,VARIABLE	2K
R 026	1	6-10621C51	RESISTOR	3.83K-1-1/8
R 027	1	6-10621C11	RESISTOR	1470-1-1/8
R 028	1	6-10621B66	RESISTOR	511-1-1/8
R 029	1	6-10621B26	RESISTOR	196-1-1/8
R 030	1	6-10621C55	RESISTOR	4.22K-1-1/8
R 031	1	6-10621B66	RESISTOR	511-1-1/8
R 032	1	6-10621B90	RESISTOR	909-1-1/8
R 033	1	6-10621B38	RESISTOR	261-1-1/8
R 034	1	6S124A73	RESISTOR	10K-5-1/4
R 035	1	6S124A93	RESISTOR	68K-5-1/4
R 036	1	6S124A81	RESISTOR	22K-5-1/4
R 037	1	6S124B12	RESISTOR	390K-5-1/4
R 038	1	6S124A97	RESISTOR	100K-5-1/4
R 039	1	6S124B14	RESISTOR	470K-5-1/4
R 040	1	6S124B14	RESISTOR	470K-5-1/4
R 041	1	18D83452F17	RESISTOR,VARIABLE	50K
R 042	1	6S124B07	RESISTOR	240K-5-1/4
R 043	1	6S124B38	RESISTOR	4.7M-5-1/4

Find No.	Qty. Req.	Part No.	Nomenclature	Part Value
R 044	1	6S124B38	RESISTOR	4.7M-5-1/4
R 045	1	6S124B06	RESISTOR	220K-5-1/4
R 046	1	6S124A85	RESISTOR	33K-5-1/4
R 047	1	6S124A18	RESISTOR	51-5-1/4
R 048	1	6S124B22	RESISTOR	1M-5-1/4
R 049	1	6S124A29	RESISTOR	150-5-1/4
R 050	1	6S124A41	RESISTOR	470-5-1/4
R 051	1	6S124A13	RESISTOR	33-5-3/4
R 052	1	6S124A15	RESISTOR	39-5-1/4
R 053	1	6S124A41	RESISTOR	470-5-1/4
R 054	1	18D83452F03	RESISTOR,VARIABLE	100
R 055	1	18D83452F03	RESISTOR,VARIABLE	100
R 056	1	6S124A47	RESISTOR	820-5-1/4
R 057	1	6S124A35	RESISTOR	270-5-1/4
R 058	1	6S124A41	RESISTOR	470-5-1/4
R 059	1	6S124A41	RESISTOR	470-5-1/4
R 060	1	6S124A41	RESISTOR	470-5-1/4
R 061	1	6S124A41	RESISTOR	470-5-1/4
R 062	1	6S124A41	RESISTOR	470-5-1/4
R 063	1	6S124A41	RESISTOR	470-5-1/4
R 064	1	6S124A41	RESISTOR	470-5-1/4
R 065	1	6S124A41	RESISTOR	470-5-1/4
R 066	1	51-80368A80	RESISTOR	10K
R 067	1	51-80368A80	RESISTOR	10K
R 068	1	51-80368A80	RESISTOR	10K
R 069	1	51-80368A80	RESISTOR	10K
R 070	1	51-80368A80	RESISTOR	10K
R 071	1	51-80368A80	RESISTOR	10K
R 072	1	51-80368A80	RESISTOR	10K
R 073	1	6S185A33	RESISTOR	220-5-1/8
R 074	1	6S124A59	RESISTOR	2700-5-1/4
R 075	1	6S124A59	RESISTOR	2700-5-1/4
R 076	1	6S124A73	RESISTOR	10K-5-1/4
TP001	1	3-582118-9	JACK,TIP	WHITE
U 001	1	51-80345A08	INTEGRATED CIRCUIT	LM341P-8.0 SCREENED
U 002	1	51-80345A07	INTEGRATED CIRCUIT	LM320MP-8.0 SCREENED
U 003	1	51-80345A03	INTEGRATED CIRCUIT	CA3183E SCREENED
U 004	1	51-80345A04	INTEGRATED CIRCUIT	CA3240E SCREENED
U 005	1	51-80368A62	INTEGRATED CIRCUIT	LM308AN SCREENED
U 006	1	51-80368A40	INTEGRATED CIRCUIT	MC14066BCP SCREENED
U 007	1	51-80323A60	INTEGRATED CIRCUIT	MC10116P SCREENED
U 008	1	51-80368A58	INTEGRATED CIRCUIT	MC14042B SCREENED
U 009	1	51-80368A58	INTEGRATED CIRCUIT	MC14042B SCREENED
U 010	1	51-80368A51	INTEGRATED CIRCUIT	MC14532BCP SCREENED
U 011	1	51-80368A51	INTEGRATED CIRCUIT	MC14532BCP SCREENED
U 012	1	51-80368A43	INTEGRATED CIRCUIT	MC14071BCP SCREENED
U 013	1	51-80368A47	INTEGRATED CIRCUIT	MC14503BCP SCREENED
U 014	1	51-80368A51	INTEGRATED CIRCUIT	MC14532BCP SCREENED
U 015	1	51-80368A51	INTEGRATED CIRCUIT	MC14532BCP SCREENED
U 016	1	51-80368A43	INTEGRATED CIRCUIT	MC14071BCP SCREENED
U 017	1	51-80368A47	INTEGRATED CIRCUIT	MC14503BCP SCREENED
U 018	1	51-80368A51	INTEGRATED CIRCUIT	MC14532BCP SCREENED
U 019	1	51-80368A47	INTEGRATED CIRCUIT	MC14503BCP SCREENED
U 020	1	51-80368A47	INTEGRATED CIRCUIT	MC14503BCP SCREENED
U 021	1	51-80345A22	INTEGRATED CIRCUIT	MC14515BCP SCREENED
VR001	1	48-82256C38	DIODE,ZENER	9.1V

Figure 18-3. Front Panel Interface Module A12 (RTL-4086A) Parts Location Diagram (Sheet 2 of 2)

SECTION 19

10 MHz FREQUENCY STANDARD MODULE (A13)

19-1. General. The frequency Standard Module provides a stable 10 MHz source and the interface for an external 10 MHz input. A block diagram of the Frequency Standard Module is shown in figure 19-1 with its schematic shown in figure 19-2.

19-2. 10 MHz Oscillator and Control. The internal 10 MHz source is either a temperature compensated crystal oscillator (TCXO) or an optional ovenized crystal oscillator (OVXO). A voltage regulator on the module supplies the voltage to the oscillator and monitors the supply current. For the ovenized option, at power on the oven draws high current. As the oven warms up the current decreases, reaching some low valve when the operating temperature has been reached. A current detector illuminates the oven ready indicator when the current has decreased to the stabilized valve. The indicator is continuously illuminated with the TCXO.

19-3. Internal/External Switchover. With no signal at the external 10 MHz input jack, the internal oscillator is gated to the SYNTH 10 MHz and the external 10 MHz OUT signal paths. When an external 10 MHz input is applied the switchover circuitry detects its presence, removes the power from the internal oscillator, and gates the external input to the SYNTH 10 MHz and external 10 MHz OUT signal paths. The oven ready indicator is extinguished when the system is operating from an external standard.

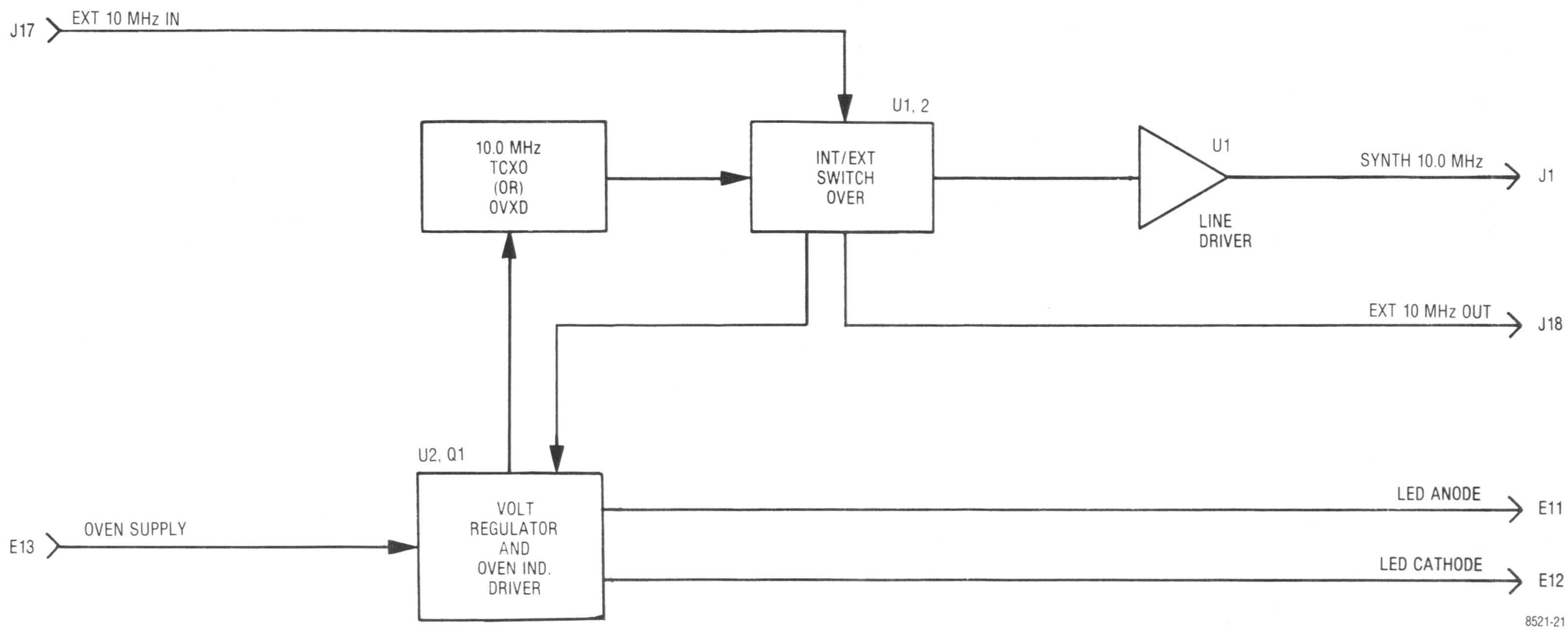

Figure 19-1. Frequency Standard Module A13
Block Diagram

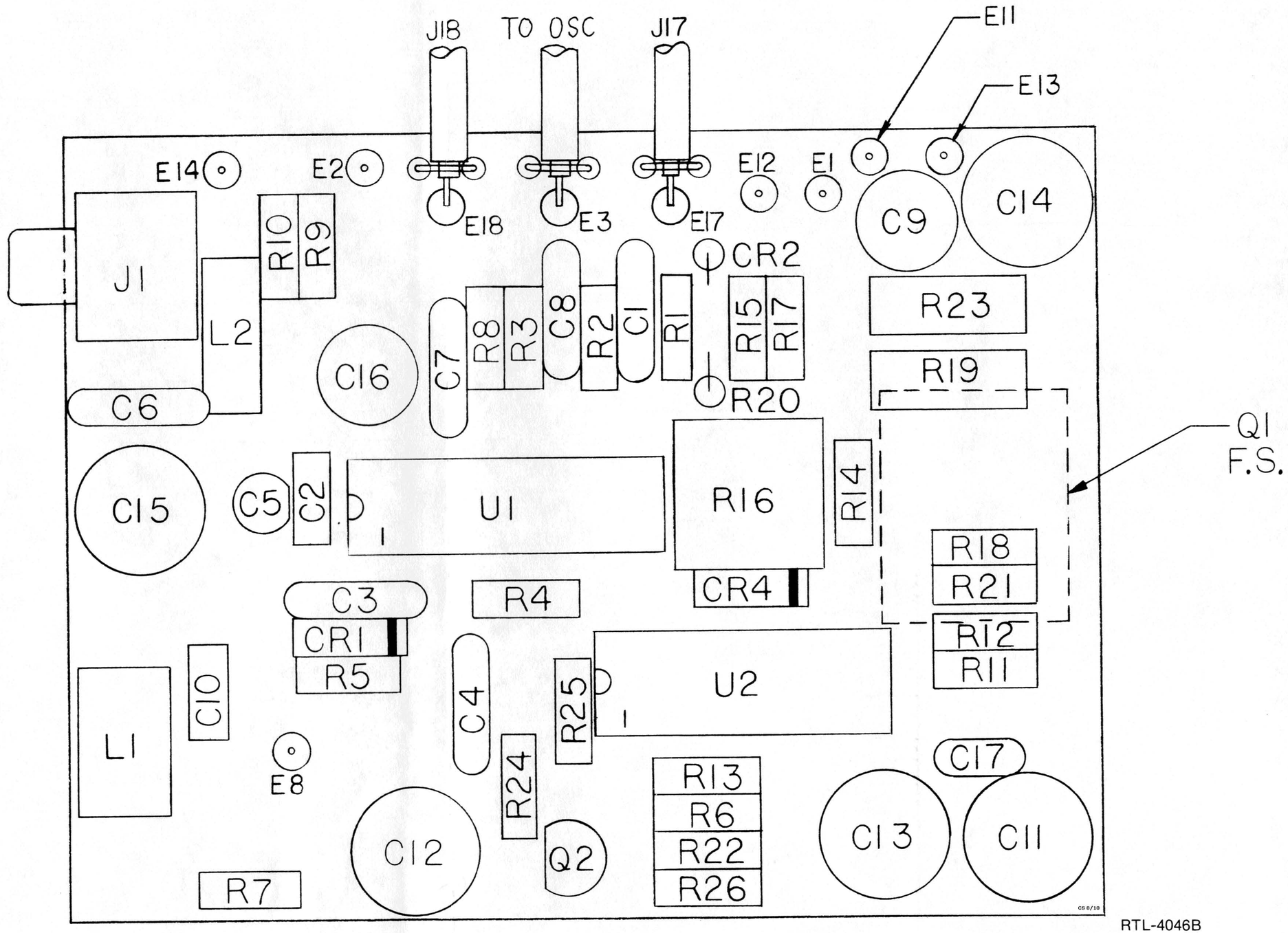

RTL-4046B

Figure 19-4. Frequency Standard Module A13 PWB Parts Location Diagram

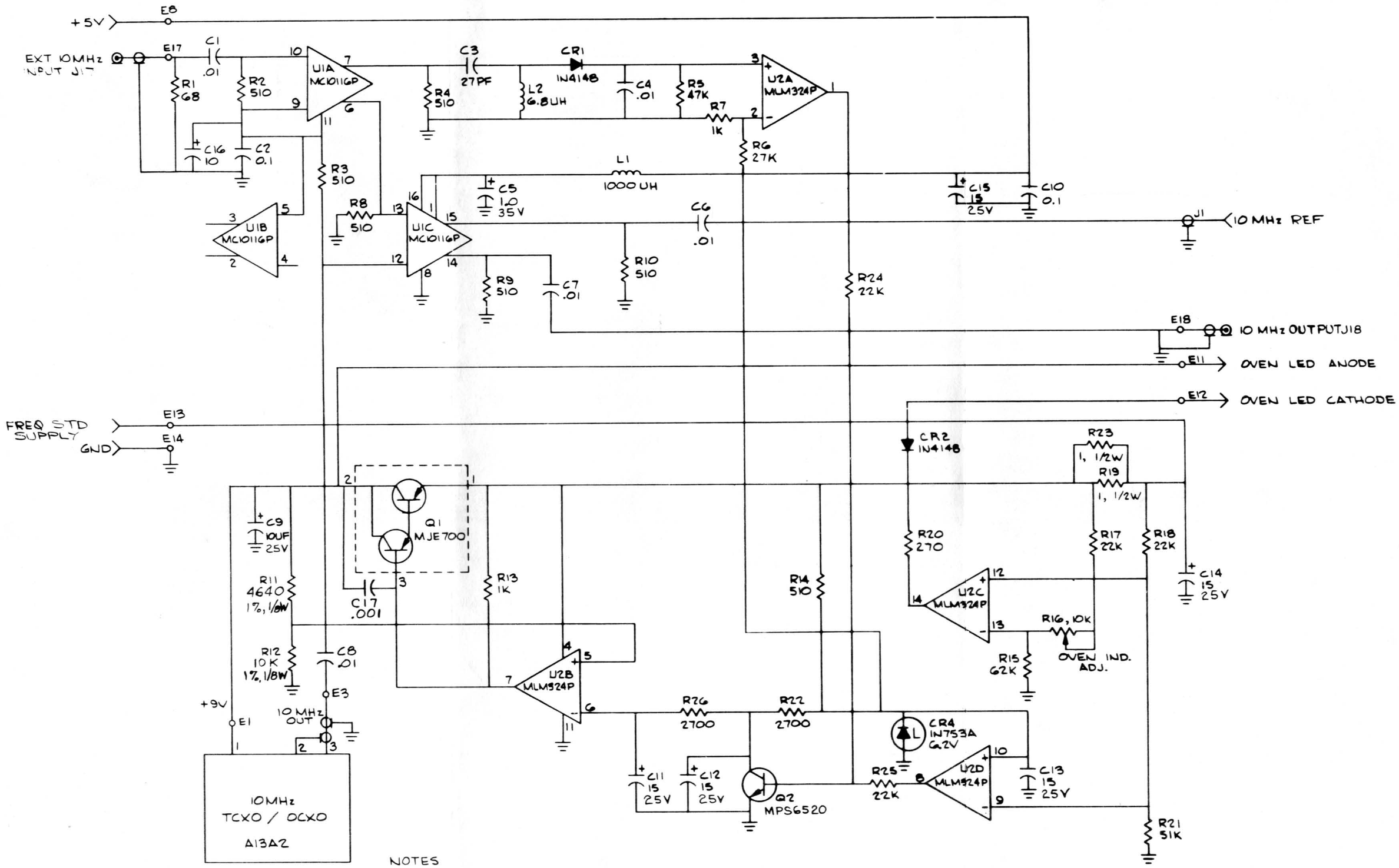

NOTES

1. TOP ASSY A13 01-P07898V
   PWB ASSY A13A1 01-P00375N002
   A13A2 OCXO 58-P00355N
   A13A2 TCXO 58-P00354N

2. CAPACITORS ARE IN UF UNLESS NOTED
3. RESISTORS ARE ¼ W UNLESS NOTED

Figure 19-2. Frequency Standard Module A13 Schematic Diagram

Find No.	Qty. Req.	Part No.	Nomenclature	Part Value
A13		RTL-1011A	FREQUENCY STANDARD	
003	1	07-P07885V001	BRACKET,OSC	
004	7	MS35206-214	SCREW,PH	4-40X.312
005	7	MS35338-40	WASHER,LOCK	NO.4
006	4	MS27183-3	WASHER,FLAT	NO.4
009	AR	30-15068A34	CABLE,RF	WHITE
010	2	1107-4-A-7	SPACER	
011	1	64-P06839R001	PLATE, CONNECTOR MTG	
012	1	29-15122A17	TERMINAL,LUG	
013	AR		WIRE	24 WHT
014	AR	SN63WRMAP3	SOLDER	
015	AR	11-14167A01	INK	BLACK
016	1	14-15140A08	INSULATOR,MICA	
017	AR		WIRE	22 WHT
018	3	NAS620C4L	WASHER	NO.4
019	AR	M23053/5-205-C	INSULATION SLEEVING	.187 CLR
020	AR		WIRE	24
A 001	1	RTL-4046B	10MHZ STANDARD INTERF	
A 002	1	01-80307A98	REF OSC, 10 MHZ,TCXO	
J 017	1	9-80331A69	CONNECTOR,RF	
J 018	1	9-80331A69	CONNECTOR,RF	
*A002	1	RTL-1006A	OSC, HI STABILITY	

*THIS OSCILLATOR USED WITH HIGH STABILITY OPTION A13 MODULE TRL-1012A.

NOTES:

1. FOR REFERENCE DOCUMENTS REFER TO: 63-P08055V SCHEMATIC DIAG.
2. PARTIAL REFERENCE DESIGNATIONS ARE SHOWN. FOR COMPLETE DESIGNATION PREFIX WITH A13.
3. SOLDER ALL ELECTRICAL CONNECTIONS IN ACCORDANCE WITH REQUIREMENT 5 OF MIL-STD-454 USING FIND NO. 14.
4. INSTALL FIND NO. 16 BETWEEN TRANSISTOR ON A1 AND BRACKET FIND NO. 3.
5. "E" TERMINATION LOCATIONS ARE SHOWN FOR REFERENCE ONLY AND ARE NOT TO BE MARKED ON THE ASSEMBLY.
6. SOLDER COAX CABLE SHIELDS TO P.W.B. AND CONNECTORS USING FIND NO. 14 AND 20.
7. MARK SERIAL NUMBER, A13, AND PART NUMBER 01-P07898V□□ IN ACCORDANCE WITH MIL-STD-130 IN .12 MIN. HIGH GOTHIC CHARACTERS USING FIND NO. 15.

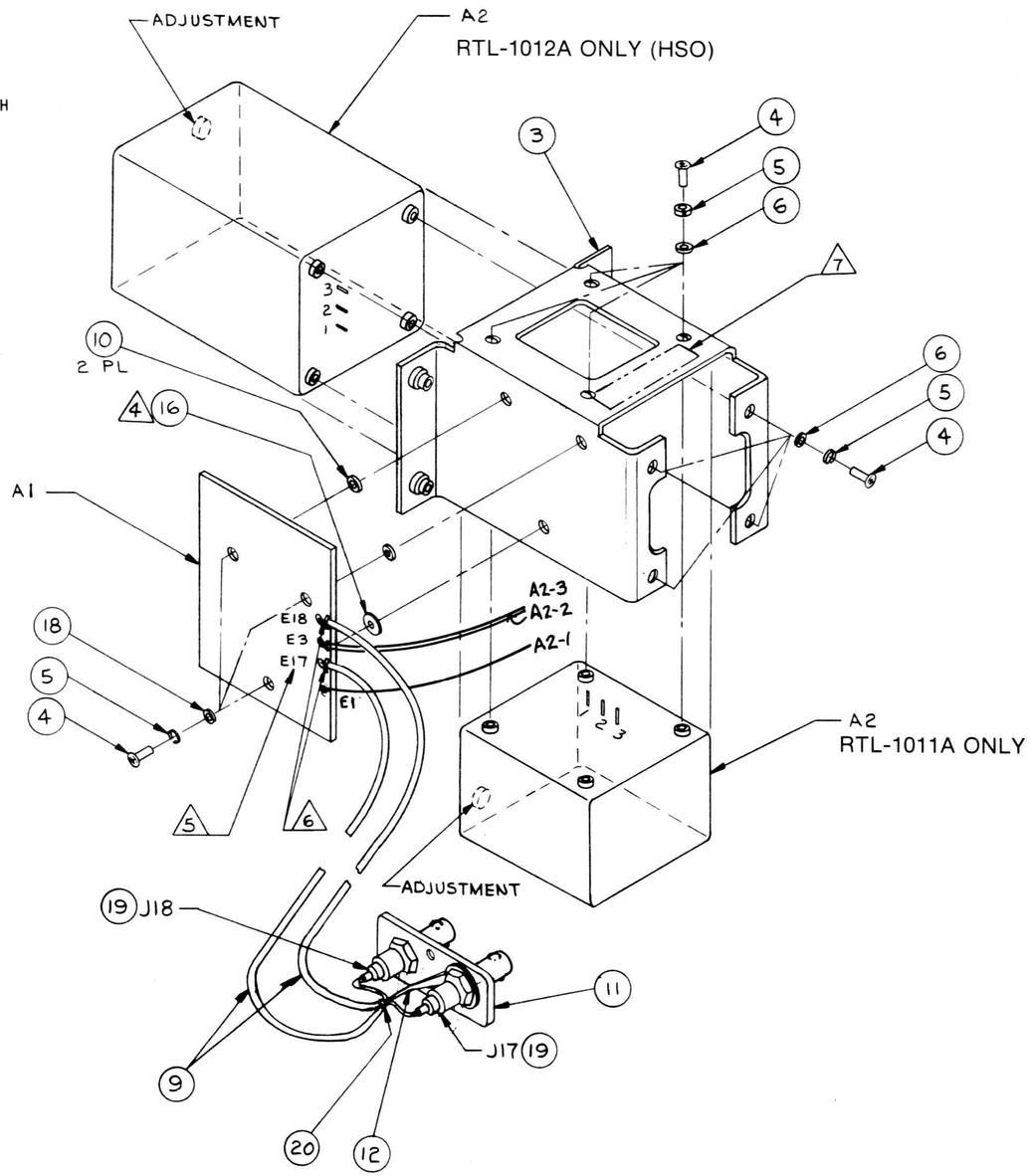

Figure 19-3. Frequency Standard Module A13 (RTL-1011A) Parts Location Diagram

Find No.	Qty. Req.	Part No.	Nomenclature	Part Value
		RTL-4046B	10MHZ INTERFACE	
001	1	84-80335A26	PWB, 10 MHZ INTERFACE	
002	AR	SN63WRP3	SOLDER	
003	AR	11-14167A01	INK	BLACK
004	AR	SN96WRMAP3	SOLDER	
C 001	1	21D82428B59	CAPACITOR	.01UF-2080-200
C 002	1	21-80369A82	CAPACITOR	.1UF-20-100
C 003	1	21D84494B42	CAPACITOR	27PF-5-500
C 004	1	21D82428B59	CAPACITOR	.01UF-2080-200
C 005	1	23D83441B15	CAPACITOR	1.0UF-20-35
C 006	1	21D82428B59	CAPACITOR	.01UF-2080-200
C 007	1	21D82428B59	CAPACITOR	.01UF-2080-200
C 008	1	21D82428B59	CAPACITOR	.01UF-2080-200
C 009	1	23D84665F01	CAPACITOR	10UF-25V
C 010	1	21-80369A82	CAPACITOR	.1UF-20-100
C 011	1	23D84665F02	CAPACITOR	15UF-25V
C 012	1	23D84665F02	CAPACITOR	15UF-25V
C 013	1	23D84665F02	CAPACITOR	15UF-25V
C 014	1	23D84665F02	CAPACITOR	15UF-25V
C 015	1	23D84665F02	CAPACITOR	15UF-25V
C 016	1	23D84665F01	CAPACITOR	10UF-25V
C 017	1	21D82187B14	CAPACITOR	1000PF-10-100
CR001	1	48-84463K02	DIODE	
CR002	1	48-84463K02	DIODE	
CR004	1	48-84302A09	DIODE,ZENER	6.2V-5-.4
J 001	1	901	CONNECTOR,PHONE JACK	
L 001	1	24-80369A42	COIL	1000UH
L 002	1	24-80369A16	CHOKE, RF	6.8UH
Q 001	1	48-80321A06	TRANSISTOR	
Q 002	1	48-80368A91	TRANSISTOR	MPS6520 SCREENED

Find No.	Qty. Req.	Part No.	Nomenclature	Part Value
R 001	1	6S124A21	RESISTOR	68-5-1/4
R 002	1	6S124A42	RESISTOR	510-5-1/4
R 003	1	6S124A42	RESISTOR	510-5-1/4
R 004	1	6S124A42	RESISTOR	510-5-1/4
R 005	1	6S124A89	RESISTOR	47K-5-1/4
R 006	1	6S124A83	RESISTOR	27K-5-1/4
R 007	1	6S124A49	RESISTOR	1K-5-1/4
R 008	1	6S124A42	RESISTOR	510-5-1/4
R 009	1	6S124A42	RESISTOR	510-5-1/4
R 010	1	6S124A42	RESISTOR	510-5-1/4
R 011	1	6-10621C59	RESISTOR	4640-1-1/8
R 012	1	6-10621C91	RESISTOR	10K-1-1/8
R 013	1	6S124A49	RESISTOR	1K-5-1/4
R 014	1	6S124A42	RESISTOR	510-5-1/4
R 015	1	6S124A92	RESISTOR	62K-5-1/4
R 016	1	18D83452F14	RESISTOR,VARIABLE	10K
R 017	1	6S124A81	RESISTOR	22K-5-1/4
R 018	1	6S124A81	RESISTOR	22K-5-1/4
R 019	1	6S125B70	RESISTOR	1-5-1/2
R 020	1	6S124A35	RESISTOR	270-5-1/4
R 021	1	6S124A90	RESISTOR	51K-5-1/4
R 022	1	6S124A59	RESISTOR	2.7K-5-1/4
R 023	1	6S125B70	RESISTOR	1-5-1/2
R 024	1	6S124A81	RESISTOR	22K-5-1/4
R 025	1	6S124A81	RESISTOR	22K-5-1/4
R 026	1	6S124A59	RESISTOR	2.7K-5-1/4
U 001	1	51-80323A60	INTEGRATED CIRCUIT	MC10116P SCREENED
U 002	1	51-80368A64	INTEGRATED CIRCUIT	LM324N SCREENED

Figure 19-4. Frequency Standard Module A13 PWB Parts Location Diagram

SECTION 20

FRONT PANEL (A14)

20-1. GENERAL. The front panel assembly consists of a display board module and the analyzer operating switches and controls. A schematic diagram of the front panel assembly is shown in figure 20-1.

20-2. DISPLAY BOARD. The display board holds and decodes LED data. A display of 27 LEDs is driven by 24 drivers and three inputs from external sources. The keyboard is a 5-row X4-column matrix of momentary contact switches. Jumper connections on the board are used to route signals between connectors. The display board consists of three latch/decoders, 24 LED drivers, and a 27 LED display. A display board block diagram is shown in figure 20-2.

20-3. The three latch/decoders hold and decode input data from the AF DATA BUS 0-3. Signals $\overline{LS0}$ - $\overline{LS2}$ are latch selects that transfer data from the AF DATA BUS 0-3 to the corresponding latch. Only one LED at a time can be turned on by any of the three latch selects. Each driver is an open-collector device which sinks current through its respective LED.

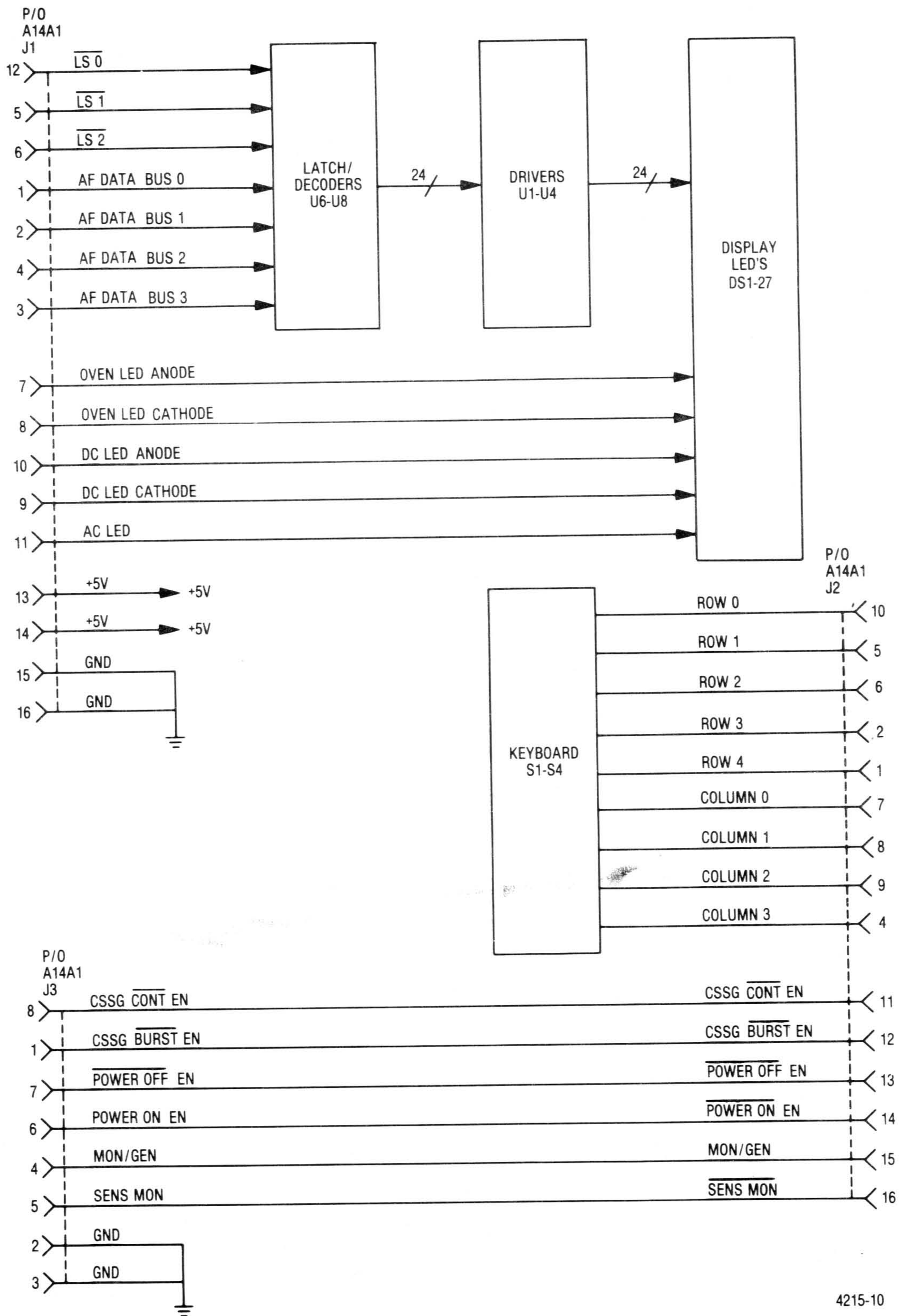

Figure 20-3 Display Board A14A1
Block Diagram

NOTES:

1. PARTIAL REFERENCE DESIGNATIONS ARE SHOWN. FOR COMPLETE DESIGNATION PREFIX WITH 1A14.
2. FOR REFERENCE DRAWINGS REFER TO:
   01-P07860V FRONT PANEL ASSEMBLY
   01-P07843V DISPLAY BD ASSEMBLY
   63-P07899V DISPLAY BD SCHEMATIC
   01-P07968V SWITCH PWB ASSEMBLY
3. UNLESS OTHERWISE SPECIFIED:
   ALL RESISTORS ARE IN OHMS, ± 5 PCT, 1/4 WATT.
   ALL VOLTAGES ARE DC.

4 APPLIES TO IEEE OPTION ONLY. FOR REFERENCE DRAWING SEE: 01-P07860V FRONT PANEL ASSEMBY

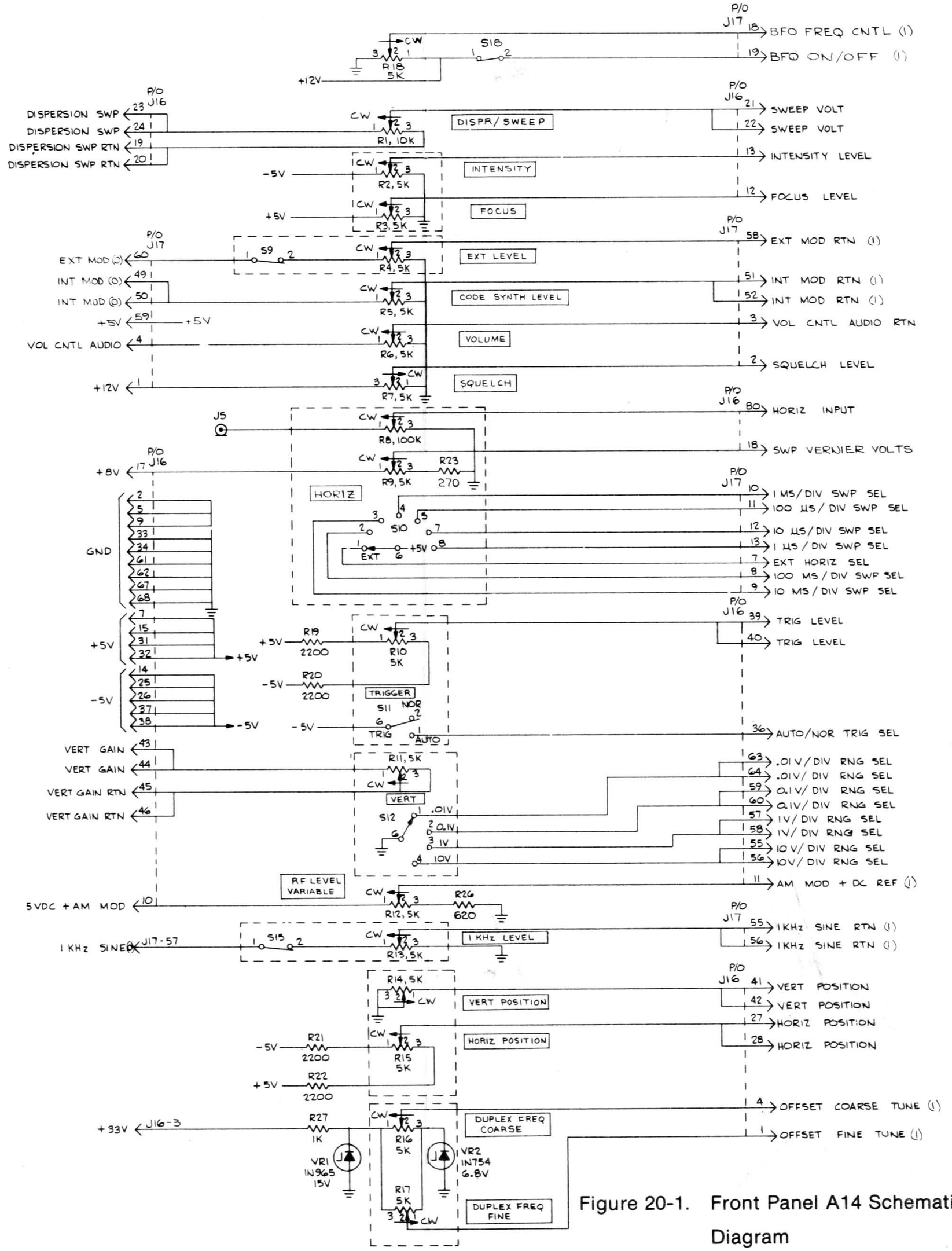

Figure 20-1. Front Panel A14 Schematic Diagram

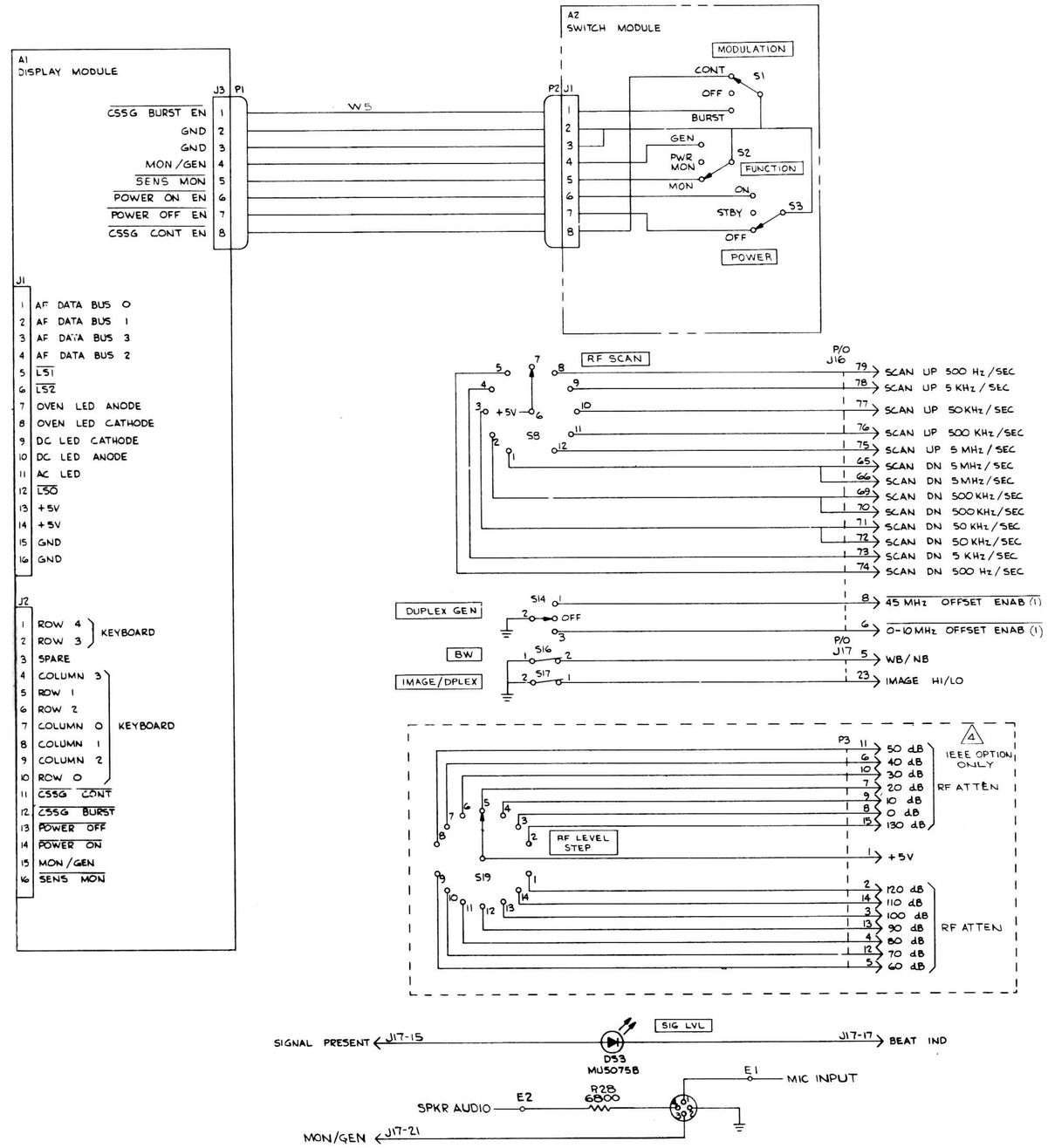

Figure 20-1. Front Panel A14 Schematic Diagram

NOTES

1. PARTIAL REFERENCE DESIGNATIONS ARE SHOWN. FOR COMPLETE DESIGNATION PREFIX WITH A14A1.
2. FOR REFERENCE DRAWINGS REFER TO:
   PL01-P07843V001 PARTS LIST
   01-P07843V ASSEMBLY DRAWING
3. UNLESS OTHERWISE SPECIFIED:
   ALL RESISTORS ARE IN OHMS, ±5 PCT, 1/4 WATT.
   ALL VOLTAGES ARE DC.
4. DEVICE TYPE AND CONNECTIONS NOT SHOWN ON SYMBOL ARE LISTED IN TABLE 1. UNDERLINED PORTION OF TYPE NUMBER IS USED AS A CODE TO IDENTIFY DEVICES ON DIAGRAM.
5. ALL DIODES ARE MV5075B.

TABLE 1

REF DES	DEVICE TYPE SEE NOTE 4	GND	+5V	NO CONN
U1	MC1413	8	9	
U2	MC1413	8	9	6,7,10,11
U3	MC1413	8	9	7,10
U4	MC1413	8	9	7,10
U6	MC14514	12	24	13-16,23
U7	MC14514	12	24	4,5,13-20,23
U8	MC14514	12	24	4,5,13-20,23
U11	MC14069	7	14	

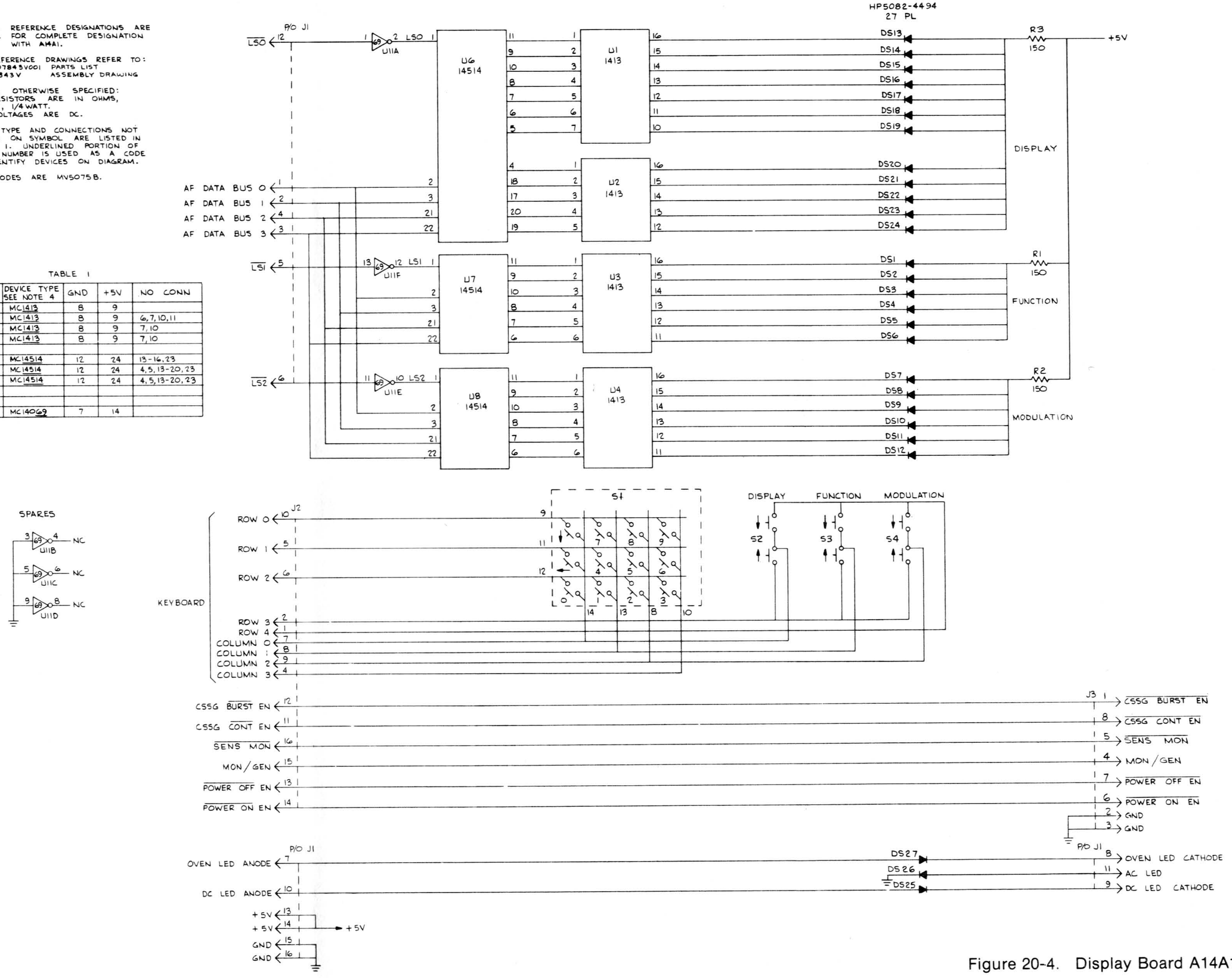

Figure 20-4. Display Board A14A1 Schematic Diagram

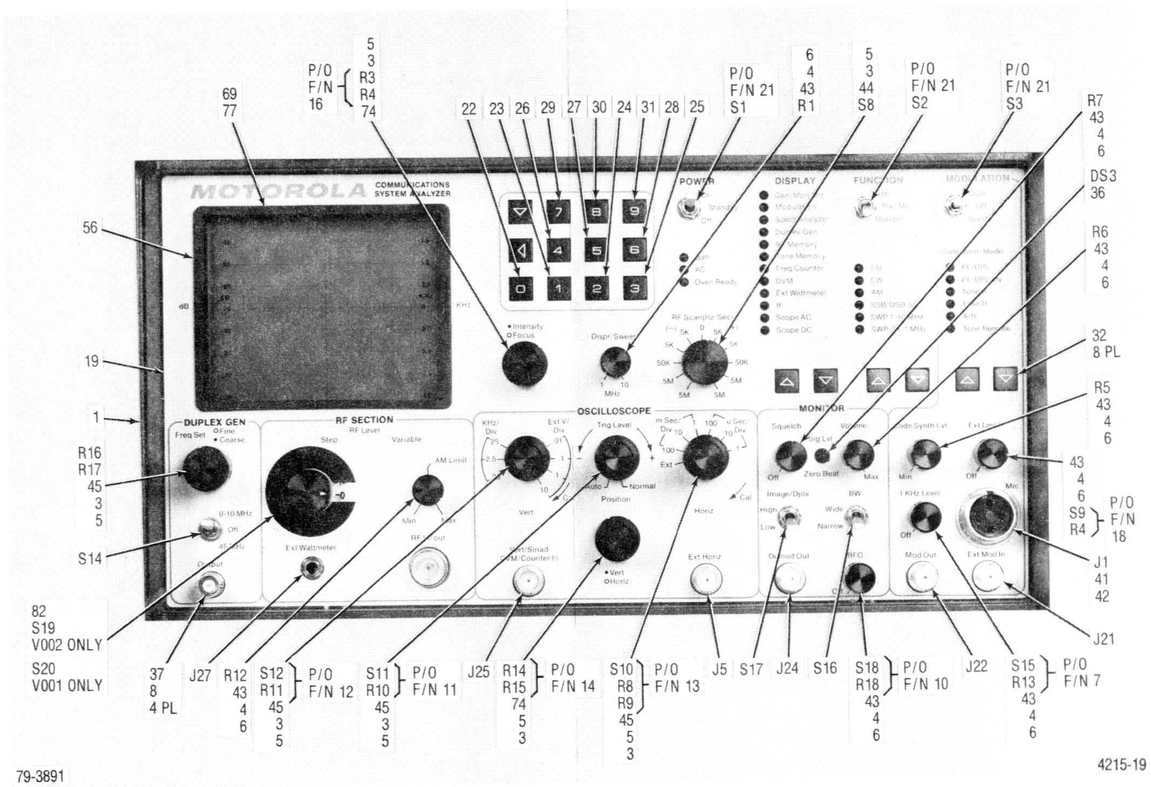

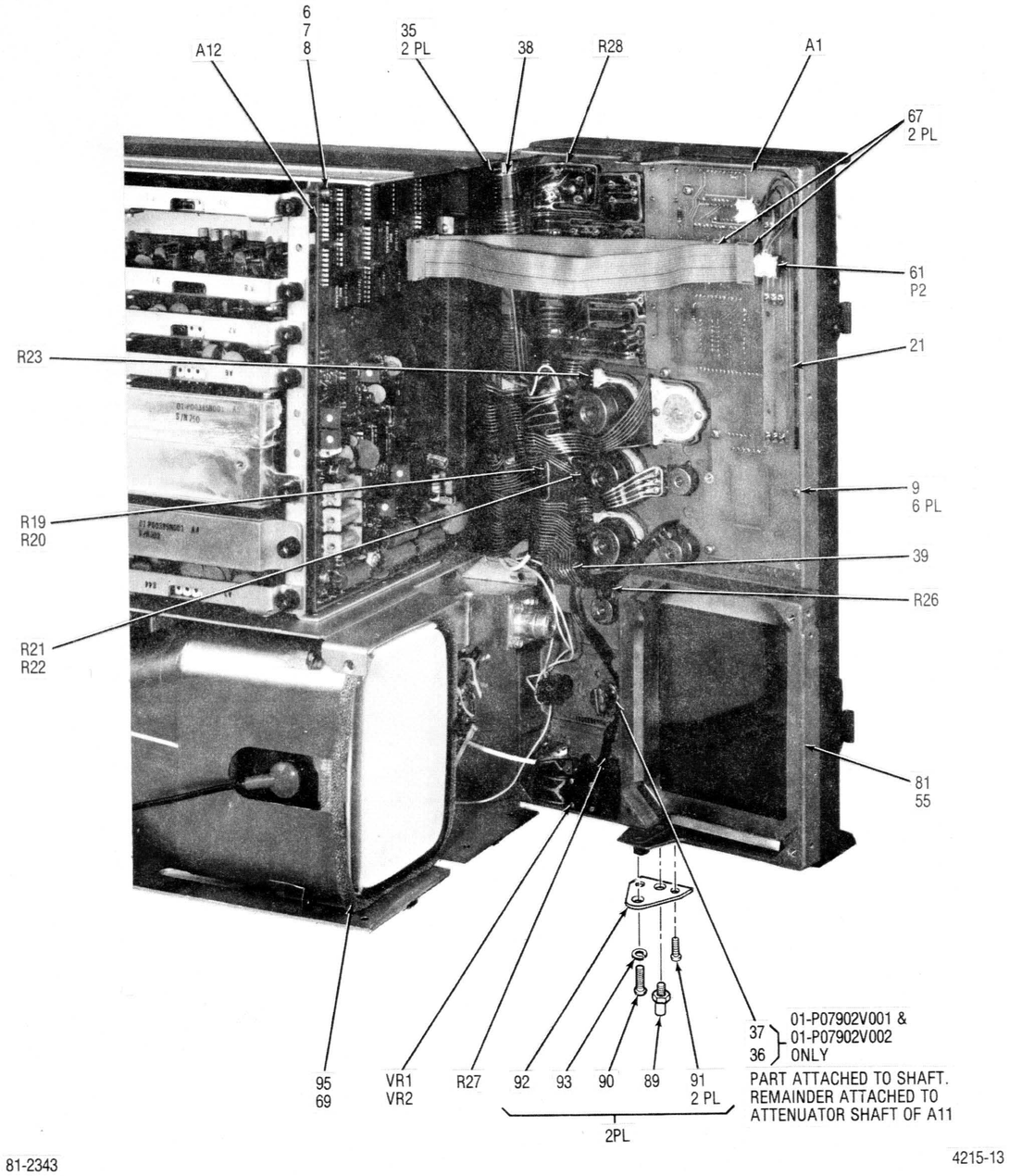

Figure 20-2. Front Panel A14 (01-80305A64) Parts Location Diagram (Sheet 1 of 3)

Find No.	Qty. Req.	Part No.	Nomenclature	Part Value
A14		1-80305A64	FRONT PANEL	
001	1	64-P07888V001	PANEL,FRONT	
003	7	1195M	NUT,COMPONENT	3/8-32
004	8	1245M	NUT,COMPONENT	1/4-32
005	7	1220-02	WASHER,LOCK	3/8
006	8	1214-05	WASHER,LOCK	1/4
008	4	3-80342A60	SCREW,FL HD 82 DEGREE	3-56X1/4
009	11	03-P07961V024	SCREW,MACH,SEMS PH EX	4-40X.312
010	1	18-80346A17	RESISTOR,VARIABLE/SWI	BFO
011	1	40-80335A78	SWITCH,RESISTOR VARIA	SCOPE TRIG
012	1	40-80335A77	SWITCH,RESISTOR VARIA	SCOPE VERT.
013	1	40-80335A76	SWITCH/DUAL RESISTOR,	SCOPE HORIZ
014	1	18-80346A13	RESISTOR,VAR,DUAL,SCO	
015	1	18-80346A19	RESISTOR,VAR,DUAL,OFF	
016	1	18-80346A13	RESISTOR,VAR,DUAL,FOC	
017	1	18-80346A18	RESISTOR,VARIABLE/SWI	1KHZ LEVEL
018	1	18-80346A18	RESISTOR,VARIABLE/SWI	EXT LEVEL
019	1	64-P07905V001	FR PANEL OVERLAY	
020	1	43-15069A02	BUSHING	
021	1	1-80305A55	SWITCH PWB ASSY	
022	1	38-80331A49	PUSHBUTTON,SWITCH-0	
023	1	38-80331A50	PUSHBUTTON, SWITCH-1	
024	1	38-80331A51	PUSHBUTTON, SWITCH-2	
025	1	38-80331A52	PUSHBUTTON, SWITCH-3	
026	1	38-80331A53	PUSHBUTTON, SWITCH-4	
027	1	38-80331A54	PUSHBUTTON, SWITCH-5	
028	1	38-80331A55	PUSHBUTTON, SWITCH-6	
029	1	38-80331A56	PUSHBUTTON, SWITCH-7	
030	1	38-80331A57	PUSHBUTTON, SWITCH-8	
031	1	38-80331A58	PUSHBUTTON, SWITCH-9	
032	8	38-80331A48	PUSHBUTTON,SWITCH,DEL	
035	2	9-80331A67	CONNECTOR	80 PIN W/O EARS
036	1	004-9011	HOLDER,LED	
037	1	1-80304A44	CABLE ASSEMBLY,OFFSET	FRONT PANEL/A11
038	1	84-80331A39	PWB,FLEX LEFTSIDE,DIS	
039	1	84-80348A95	PWB,FLEX RIGHTSIDE,SC	
040	11	04-14154B12	INSULATOR	NO.4
041	1	2-482070	NUT,COMP	
042	1	4-7699	WASHER,COMP	
043	8	36-80335A84	KNOB	1/8 SHAFT
044	1	36-80335A85	KNOB	1/4 SHAFT
045	5	36-80355A87	KNOB,DUAL 1/8-1/4 SHA	
047	AR	SN63WRMAP3	SOLDER	
048	AR	11-14167A01	INK	BLACK
049	AR		WIRE	22 WHT
050	AR	30-15068A34	CABLE,RF	WHITE
051	1	NAS1745-3	FERRULE,SOLDER	
052	AR	M23053/5-105-9	INSULATING SLEEVING	.187 WHT
053	AR	M23053/5-103-9	INSULATION SLEEVING	.093 WHT
054	AR		ENCAPSULANT SILICONE	
055	1	75-80335A50	ISOLATOR,CRT FRONT	
056	1	13-80331A99	BEZEL	
057	1	36-80335A86	KNOB,DUAL 1/8-1/4 SHA	
058	AR		WIRE	24 WHT
059	AR	SN63WRP3	SOLDER	
060	1	29-15122A17	TERMINAL,LUG	
061	1	1-80305A60	CABLE ASSEMBLY,RIBBON	
074	2	36-80346A23	KNOB	DUAL 1/8-1/4 SHAFT
076	AR	RTV3145	ADHESIVE	
080	AR		COMPOUND,THD LKG,PURPTYPE II, GR M,222	
081	1	MS35206-214	SCREW,PH	4-40X.312
082	45	MS35338-40	WASHER,LOCK	NO.4
083	45	MS27183-3	WASHER,FLAT	NO.4
084	45	A-201-5	COUPLING,FLEX	
085	1	1-80331A45	SHAFT,EXTENSION	
086	2	1-80305A57	.CABLE ASSY,BIBBON	
087	2	76-80348A99	.STUD,HANDLE	
088	2	MS16996-9	.SCERW	.190-32X.375
089	2	.MS24693-C26	.SCREW	..138-32X.375
090	2	64-P04145T001	.PLATE,DOUBLE	
091	2	MS35338-138	.WASHER	..190
092	AR	30-80370A49	.WIRE MESH,KNITTED	3/16 DIA
A 001	1	1-80305A63	DISPLAY BOARD ASSY	
D 003	1	48D84404E03	LED	
J 001	1	9-830418	CONNECTOR,MIC	
J 005	1	9-80331A69	CONNECTOR,RF	
J 021	1	9-80331A69	CONNECTOR,RF	
J 022	1	9-80331A69	CONNECTOR,RF	
J 024	1	9-80331A69	CONNECTOR,RF	
J 025	1	9-80331A69	CONNECTOR,RF	
J 027	1	9-80331A70	CONNECTOR,PHONE JACK	
P 001	1	1-80304A54	CABLE ASSEMBLY	16PIN-101N-END
R 001	1	18-80346A15	RESISTOR,VAR,DISPR/SW	10K-10-1/4
R 002	1	06-	RESISTOR	PART OF F/N 16
R 003	1	06-	RESISTOR	PART OF F/N 16
R 004	1	06-	RESISTOR	PART OF F/N 18
R 005	1	18-80346A16	RESISTOR,VAR,INT,MOD,	5K
R 006	1	18-80346A14	RESISTOR,VAR,AUDIO LE	5K
R 007	1	18-80346A14	RESISTOR,VAR,SQUELCH	5K
R 008	1	06-	RESISTOR	PART OF F/N 13
R 009	1	06-	RESISTOR	PART OF F/N 13
R 010	1	06-	RESISTOR	PART OF F/N 11
R 011	1	06-	RESISTOR	PART OF F/N 12
R 012	1	18-80346A14	RESISTOR,VAR,RF LEVEL	5K
R 013	1	06-	RESISTOR	PART OF F/N 17
R 014	1	06-	RESISTOR	PART OF F/N 14
R 015	1	06-	RESISTOR	PART OF F/N 14
R 016	1	06-	RESISTOR	PART OF F/N 15
R 017	1	06-	RESISTOR	PART OF F/N 15
R 018	1	06-	RESISTOR	PART OF F/N 10
R 019	1	6S124A57	RESISTOR	2.2K-5-1/4
R 020	1	6S124A57	RESISTOR	2.2K-5-1/4
R 021	1	6S124A57	RESISTOR	2.2K-5-1/4
R 022	1	6S124A57	RESISTOR	2.2K-5-1/4
R 023	1	6S124A35	RESISTOR	270-5-1/4
R 026	1	6S124A44	RESISTOR	620-5-1/4
R 027	1	6S124A49	RESISTOR	1K-5-1/4
R 028	1	6S125A69	RESISTOR	6.8K-5-1/2
S 008	1	40-80335A75	SWITCH,ROTARY	1 POL,11 POS,RF SCAN
S 009	1	40-	SWITCH	PART OF F/N 18
S 010	1	40-	SWITCH	PART OF F/N 13
S 011	1	40-	SWITCH	PART OF F/N 11
S 012	1	40-	SWITCH	PART OF F/N 12
S 014	1	40-80335A81	SWITCH,TOGGLE	SP3T,OFFSET
S 015	1	40-	SWITCH	PART OF F/N 17
S 016	1	40-80335A80	SWITCH,TOGGLE	SP5T,WB/NB
S 017	1	40-80335A80	SWITCH,TOGGLE	SP5T,IMAGE
S 018	1	40-	SWITCH	PART OF F/N 10
VR001	1	48-80345A96	DIODE	15V-20-.4
VR002	1	48-80345A92A	DIODE	6.8V-5-.4

Figure 20-2. Front Panel A14 (01-80305A64) Parts Location Diagram

Find No.	Qty. Req.	Part Number	Nomenclature	Value
001	1	84-P07842V001	PWB Switch Interconne	
J001	1	ICT-083-S-T	Socket, Solder Dip	8 pin
S001	1	MTF-106H	Switch, Toggle SPDT	
S002	1	MTF-106E	Switch, Toggle SPDT	
S002	1	MTF-106E	Switch, Toggle SPDT	

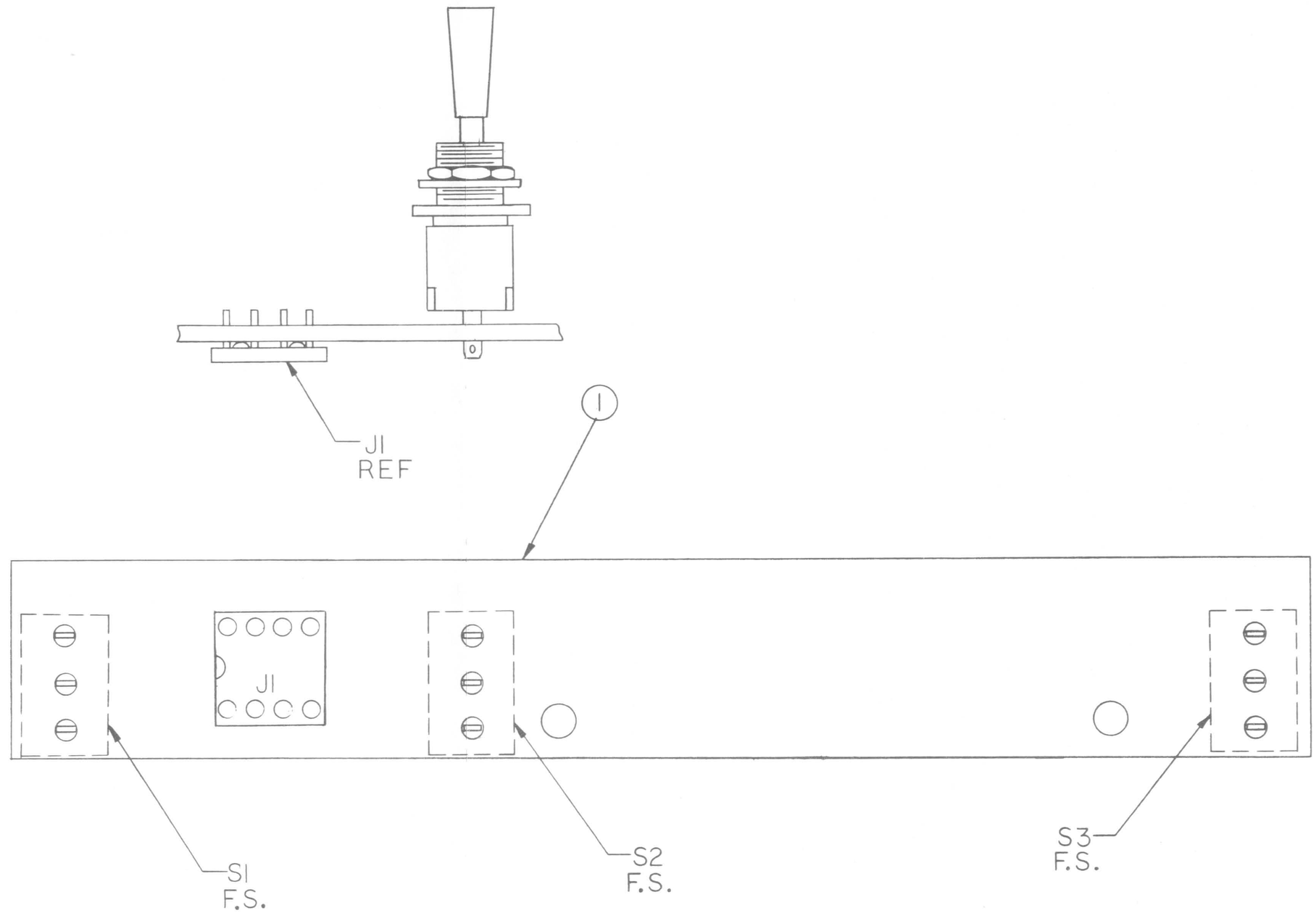

Figure 20-2. Front Panel A14 (01-80305A64) Parts Location Diagram

Find No.	Qty. Req.	Part No.	Nomenclature	Part Value
001	1	84-P07844V001	PWB, DISPLAY	
003	AR	11-14167A01	INK	BLACK
004	2	583773-4	SOCKET,12 PIN	
005	AR	SN63WRMAP3	SOLDER	
006	1	1-583773-3	SOCKET, 6 PIN	
007	2	43-P06563B007	SPACER	
008	4	43-P06563B012	SPACER	
011	2	B1534-B-1/8-5	SPACER,SWAGE	
012	2	MS35206-214	SCREW	.1120-40X.312
013	2	MS35338-40	WASHER,LK	.112
014	2	MS27183-3	WASHER,FL	.125
015	1	2-583773-0	SOCKET,24 PIN	
DS001	1	48-80368A97	LED	
DS002	1	48-80368A97	LED	
DS003	1	48-80368A97	LED	
DS004	1	48-80368A97	LED	
DS005	1	48-80368A97	LED	
DS006	1	48-80368A97	LED	
DS007	1	48-80368A97	LED	
DS008	1	48-80368A97	LED	
DS009	1	48-80368A97	LED	
DS010	1	48-80368A97	LED	
DS011	1	48-80368A97	LED	
DS012	1	48-80368A97	LED	
DS013	1	48-80368A97	LED	
DS014	1	48-80368A97	LED	
DS015	1	48-80368A97	LED	
DS016	1	48-80368A97	LED	
DS017	1	48-80368A97	LED	
DS018	1	48-80368A97	LED	
DS019	1	48-80368A97	LED	
DS020	1	48-80368A97	LED	
DS021	1	48-80368A97	LED	
DS022	1	48-80368A97	LED	
DS023	1	48-80368A97	LED	
DS024	1	48-80368A97	LED	
DS025	1	48-80368A97	LED	
DS026	1	48-80368A97	LED	
DS027	1	48-80368A97	LED	
J 001	1	09-80331A97	SOCKET,SOLDER DIP	16 PIN
J 002	1	09-80331A97	SOCKET,SOLDER DIP	16 PIN
J 003	1	09-80331A95	SOCKET,SOLDER DIP	8 PIN
R 001	1	6S124A29	RESISTOR	150-5-1/4
R 002	1	6S124A29	RESISTOR	150-5-1/4
R 003	1	6S124A29	RESISTOR	150-5-1/4
S 001	1	40-80335A64	SWITCH,PUSHBUTTON	12 POS
S 002	1	40-80369A09	SWITCH,PUSHBUTTON	2 POS
S 003	1	40-80369A09	SWITCH,PUSHBUTTON	2 POS
S 004	1	40-80369A09	SWITCH,PUSHBUTTON	2 POS
U 001	1	51-80345A21	INTEGRATED CIRCUIT	MC1413P
U 002	1	51-80345A21	INTEGRATED CIRCUIT	MC1413P
U 003	1	51-80345A21	INTEGRATED CIRCUIT	MC1413P
U 004	1	51-80345A21	INTEGRATED CIRCUIT	MC1413P
U 006	1	51-80368A49	INTEGRATED CIRCUIT	MC14514BCP SCREENED
U 007	1	51-80368A49	INTEGRATED CIRCUIT	MC14514BCP SCREENED
U 008	1	51-80368A49	INTEGRATED CIRCUIT	MC14514BCP SCREENED
U 011	1	51-80368A41	INTEGRATED CIRCUIT	MC14069BCP SCREENED

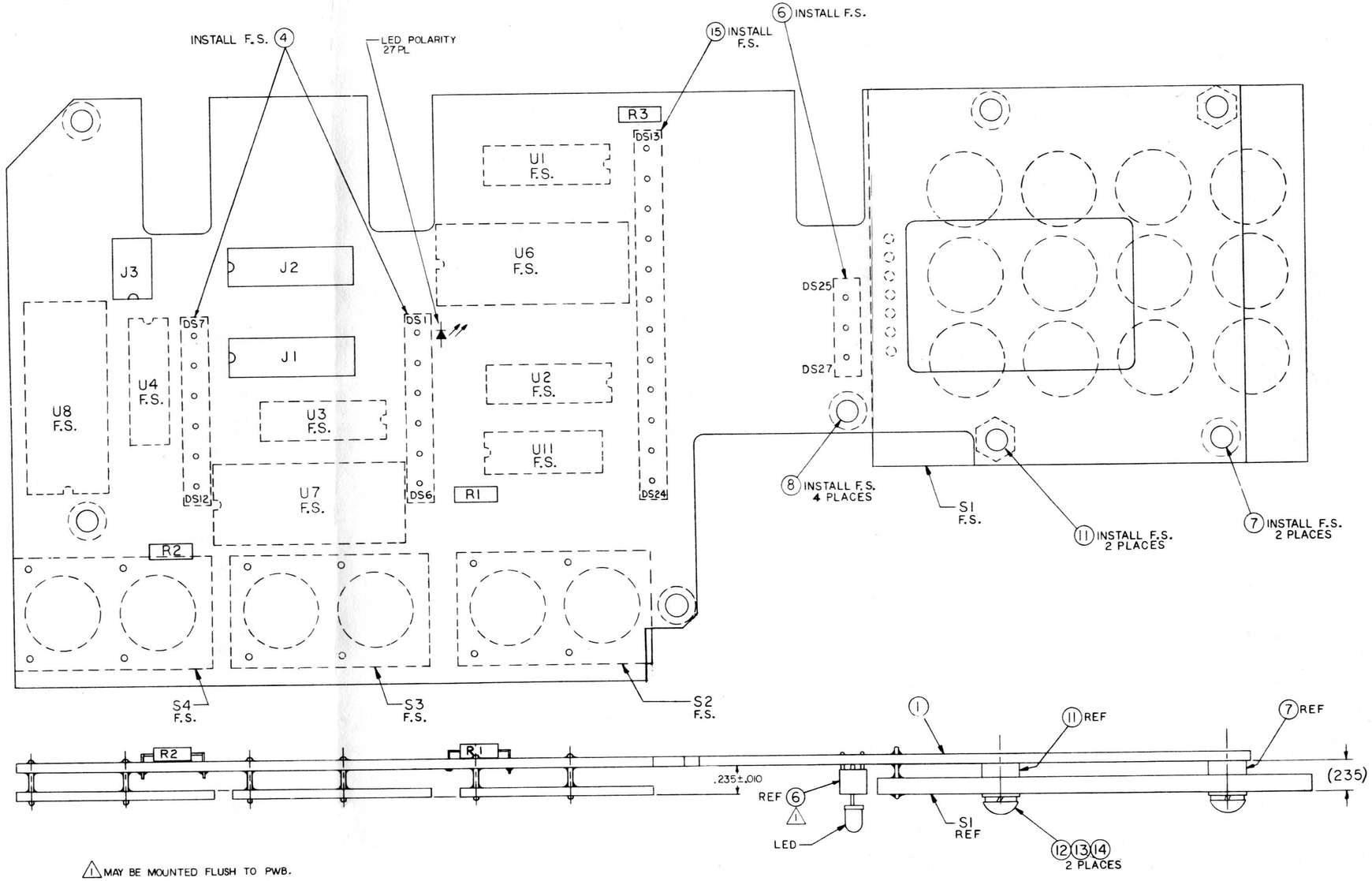

Figure 20-5. Display Board A14A1 Parts Location Diagram 1-80305A63

SECTION 21

IEEE — 488 BUS CONTROL

21-1. INTRODUCTION

21-2. The IEEE Interface Option enables the use of the Communications System Analyzer as a programmable measurement instrument. When combined with a suitable programmable controller and applications software, the major functions of the analyzer can be controlled or monitored via an IEEE-488 standard digital interface. Thus, repetitive test routines can be performed and the data recorded quickly and accurately with little operator interaction.

21-3. The interface characteristics conform to the specifications of the IEEE Standard Digital Interface for Programmable Instrumentation (IEEE Standard 488) which defines both the electrical and the mechanical interface. Control protocol is also defined by the specification. Control commands which are unique to the analyzer are described in detail in the following paragraphs of this section.

21-4. The controller for this application should be capable of reading and writing ASCII and control characters from and to the bus in accordance with the 488 specification. Application software is the user's responsibility as dictated by the controller selected, although interface and application assistance is available from Motorola.

21-5. The IEEE option package consists of an IEEE Interface module (A8) with a rear panel connector, an electrically programmable RF attenuator in place of the step attenuator on the RF Input Module (A11), a fourteen position rotary switch on the front panel in place of the step attenuator shaft, and one additional ROM memory IC on the Processor module (A9).

21-6. While in the local mode the IEEE-488 equiped system operates and performs the same as a standard system, except the maximum RF output level is reduced to +11 dBm from +13 dBm. However, when the Remote Enable (REN) line on the IEEE Bus is activated many of the front panel controls are disabled and their functions placed under bus control. Refer to table 21-1 for a listing of those functions which can be controlled or monitored via the 488 Bus.

Table 21-1. IEEE-488 Interface Controllable Functions

Control/Measurement	Comment
Function Switch	Generate/Power Monitor/ Monitor
Modulation Control	Continuous/OFF/BURST
Wideband/Narrowband Switch	
Image High/Low Switch	
Duplex Oscillator Switch	0-10 MHz/OFF/45 MHz
Keyboard	Numeric Entries 0-9. Can be transmitted to the bus.
Display Mode	Generate/Monitor Metering (Note: 1) Modulation Spectrum Analyzer Duplex Generator RF Memory Tone Memory Frequency Counter DVM External Wattmeter IF Scope AC Scope DC Remote Terminal Mode Unit can also display a subset of ASCII characters (numerals 0-9, upper case alpha letters A-Z, plus other symbols—ASCII characters 20 thru 5F Hexa-decimal) enables display of operator messages on CRT display in a transparent ter-minal mode.
Function Mode	FM (Note: 1) CW AM SSB/DSB SWP 1-10 MHz SWP 0.01-1 MHz
Code Synthesizer Mode	PL/DPL PL/DPL Invert Tone A Tone B A/B Tone Remote

Control/Measurement	Comment
RF Frequency	Frequency entry to be supplied by program. Frequencies not available from memory table.
PL Frequency	
DPL Code	
Tone A Frequency	
Tone B Frequency	
Time Sequence Select	Sequences 1 through 5 only (Note: 2)
Wattmeter Element Select	
External Modulation	Modulation settable to any measurable level
Code Synthesizer Modulation	(0-20 KHz deviation in 10 Hz steps) (Note: 3) (0-90% AM in 0.1% steps)
RF level	RF level settable to any displayable level (-140 to +11 dBm in 0.1 dBm steps (Note: 3) (Note: 4)
Offset Oscillator Adjust	Duplex Generator Frequency Settable from f_0 to f_0 ±10 MHz in 1 KHz steps (Switch) placed in 0-10 MHz position) (Note: 3)
Scope Vertical Step Attenuator	0.01, 0.1, 1, 10 volts
Horizontal Scope Sweep	1, 10, 100 milliseconds 1, 10, 100 microseconds External
Input Power Meter	Reading returned as displayed on screen (Note: 3)
Frequency Error	
Deviation + or -	
% AM + or -	
SINAD	
External DVM (AC or DC)	
External Frequency Count	
External Power Meter FWD/REV	

Notes: (1) May be affected by other controls (see below).
(2) Sequence 5 timing is programmable under IEEE bus control.
(3) As reading is displayed, LED corresponding to appropriate display and function mode will illuminate.
(4) The IEEE-Bus option, due to a change in the RF step attenuator, restricts the maximum RF output to +11 dBm.

NON-CONTROLLABLE FUNCTIONS

Since control and monitor functions of the interface are implemented to obtain remote measurement capability, certain front panel controls are not implemented in the interface due to their local operator orientation. A list of these operator oriented controls are as follows:

Power On/Off
Power Mode Indicators
Display Focus
Display Intensity
Dispersion/Sweep
Scope/DVM Vertical Vernier
Scope Trigger Level
Scope Trigger Slope
Scope Horizontal Sweep Vernier
Scope Vertical Position
Scope Horizontal Position
Receiver Squelch
Receiver Volume
Zero Beat Indicator
RF Scan
RF Memory Table
Tone Sequences, 6, 7, and 8 Entries
Deviation Limit
Battery Voltage Reading
Deviation Limit Alarm (Disabled Under Remote Control)
Attenuator 0 Indicator
Battery Below Limit Warning
BFO Frequency Adjust

8521-66

21-7. IEEE-488 BUS STRUCTURE

21-8. The following discussion briefly describes the 488 Bus operation. It is not a complete definition of the total bus structure or capability. For complete information a copy of IEEE Standard 488 should be obtained.

21-9. Bus Signals. The IEEE-488 Bus consists of 16 parallel lines. The lines are divided into three groups. Lines DI01-DI08, Data Input Output, form the 8-bit data bus for the bidirectional transfer of control and ASC II characters. Three handshake lines, Data Valid (DAV), Not Ready for Data (NRFD), and Not Data Accepted (NDAC), control the transfer of data on the data bus. The remaining five lines can be termed the bus management lines with functions as follows:

Attention (ATN)	— When true the data bus carries an address or a comand when false it carries data.
Interface Clear (IFC)	— When true all devices on the bus are placed in a known quiescent state.
Service Request (SRQ)	— Indicates a device on the bus needs service.
Remote Enable (REN)	— Enables the remote control feature of the devices on the bus.
End or Indentify (EOI)	— Indicates the end of a multiple byte transfire.

21-10. Data Transfer. Each byte of data that is transferred across the data bus is synchronized with a handshaking procedure. This procedure allows devices with different data transfer rates to share the same bus. The handshake cycle starts when the source device which has data to transfer checks for a false condition on the NRFD line. When NRFD is false, all devices on the bus are ready to accept data. The source then puts the data onto the data bus and sets the DAV to its true state. The acceptor devices input the data, set the NRFD line to its true state, and when ready sets the NDAC line to its false state. Because the NRFD and NDAC lines are wire-ORed the line will not go to the false state until all devices on the bus have released the line. Thus the slowest device on the bus determines the transfer rate. When the NDAC line goes false the source devices sets the DAV false which in turn causes the acceptor devices to set the NDAC line true. When the acceptor devices have completed processing the data byte just received they allow the NRFD line to go to the false state completing the handshake. As the data transfer continues the cycle repeats for each data byte.

21-11. Bus Address. Each device on the bus is assigned a four bit address by the programer. The address assigned to the device is set by an address switch within the device. On the analyzer the address switch is on the IEEE Interface Module. Only the top four switches are used to set the address. The fifth switch is unused. To set the address use the binary equivalent of the address number and set the switches to the ON position for a logic 1. The least significant bit is the top switch.

21-12. Programming

21-13. Programing the system analyzer consists of first addressing the unit as a listener, transferring the control commands to the unit, and then sending a command termination sequence. To obtain data from the system, the pertinent control commands are first transferred to the unit and then the unit is addressed as a talker. As a talker the system outputs onto the bus the data requested by the control commands.

21-14. The bus controller is the central part of the automatic system. The program, consisting of sequences of analyzer control commands and sequences of controller instructions for handling the return data, is contained within the controller. The user must initially write the program so that the desired test sequences and data outputs will be obtained. The following paragraphs define the instruction set and data formats that can be used to control or will be returned from the system analyzer. The user must insure that the controller is compatible with the IEEE-488 Standard bus and that its program is correct for the instruments on the bus.

21-15. Command Structure. Each command consists of a two letter definition prefix followed by a numeric data field. The data field will vary in length and structure according to the definition prefix as shown in table 21-3. Spaces may be inserted anywhere in the command but are not required. Each letter or number of a command is transferred from the bus controller to the analyzer in ASCII format. ASCII defines a 7-bit digital code for each letter, number, and symbol commonly used in computer programming.

21-16. The first letter of the two letter prefix identifies a command category with the second letter identifying a particular command within that category. A listing of the command categories and the corresponding first letter is provided in table 21-2. A complete list of commands is shown in table 21-3.

Table 21-2. Command Categories

A	Audio Synthesizer
C	Control
F	Frequency Counter
G	Generate/Monitor Control
K	Keyboard
M	Modulation
O	Oscilliscope
R	Receiver
V	Voltmeter
W	Wattmeter

21-17. The data field is comprised of five sub-fields as shown:

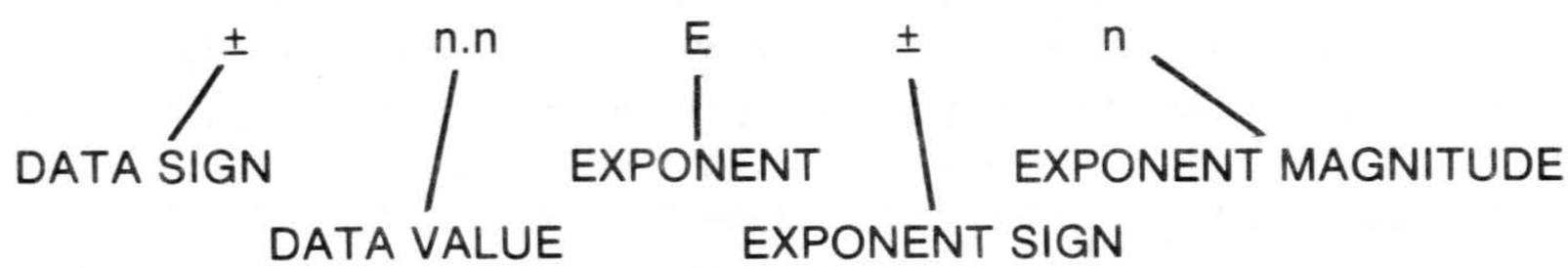

Data limits and accompanying units are given in table 21-3. The data field is optional or not allowed for certain commands.

21-18. Data Sign. The data sign is a single '+' or '–' character indicating the sign of the data value. The sign may be omitted for positive value data.

21-19. Data Value. The data value field is restricted to the numbers '0' through '9' and '.'. A maximum of five digits to the right and to the left of the decimal point are allowed. The decimal point can be omitted for integer values. If the value field is omitted, it is assumed to be zero.

21-20. Exponent. The presence of the "E" character in the exponent field indicates that the data value is to be multiplied by 10 raised to the power following the "E" character. If the "E" is omitted the exponent is assumed to be 10^0 or 1.

21-21. Exponent Sign. The exponent sign is a single + or – character and can be omitted for positive exponent values.

21-22. Exponent Magnitude. The exponent magnitude is a single character 0 through 9. If the exponent magnitude is omitted, it is assumed to be zero.

Table 21-3. Programming Commands

Prefix	Data	Units	Type	Function	Changes To Display	Changes To Function	Changes To Mode
				AUDIO GENERATOR			
AA	0-9999.9	HZ	D	Tone A Frequency			
AB	0-9999.9	HZ	D	Tone B Frequency			
AP	0-999.9	HZ	D	PL Frequency			
AD	0-777	—	D	DPL Code			
AS	0-5	—	D	Audio Sequence Select			
AW	0-9.99	SEC	D	A ON, User Seq. (AS=5)			
AX	0-9.99	SEC	D	A OFF, User Seq. (AS=5)			
AY	0-9.99	SEC	D	B ON, User Seq. (AS=5)			
AZ	0-9.99	SEC	D	B OFF, User Seq. (AS=5)			
				CONTROL			
CD	0-12	—	C	Display Select 0 Gen-Mon Mtr 1 Modulation 2 Spect Analyzer 3 Duplex Gen 4 RF Mem 5 Tone Mem 6 Freq Counter 7 DVM 8 Ext Wattmeter 9 IF 10 Scope AC 11 Scope DC 12 Terminal	1		
CF	0-5	—	C	Function Select 0 FM 1 CW 2 AM 3 SSB/DSBSC 4 SWP 1-10 MHz 5 SWP 0.01-1 MHz		1	
CG	—	—	C	Generate Mode			GEN
CM	—	—	C	Monitor Mode			MON
CP	—	—	C	Power Monitor Mode			PWR MON
				FREQUENCY COUNTER			
FC	0-35000	kHz	O	External freq count	2		
				GENERATE/MONITOR			
GF	0-999.9999	MHz	D	Generate/Monitor Frequency			
GL	-130.0 to +13.0	DBM	C	Generate RF Level			GEN
				KEYBOARD			
K1	0-127	—	D	Display Up Key Data			
K2	0-127	—	D	Display Down Key Data			
K3	0-127	—	D	Function Up Key Data			
K4	0-127	—	D	Function Down Key Data			

Table 21-3. Programming Commands (Cont)

Prefix	Data	Units	Type	Function	Changes To Display	Changes To Function	Changes To Mode
K5	0-127	—	D	Mode Up Key Data			
K6	0-127	—	D	Mode Down Key Data			
				MODULATION			
MB	—	—	C	Modulation Burst			
MC	—	—	C	Modulation Continuous			
MO	—	—	C	Modulation Off			
MM	0-5	—	C	Modulation Mode 0 PL/DPL 1 PL/DPL div 2 Tone A 3 Tone B 4 A/B 5 Tone Remote			
ME	0-99.9	kHz (FM) % (AM)	C	External Mod Level		3	GEN
MK	0-99.9	kHz (FM) % (AM)	C	1 kHz Mod Level		3	GEN
MS	0-99.9	kHz (FM) % (AM)	C	Code Synthesizer Mod Level	—	3	GEN
				OSCILLOSCOPE			
OH	0-6	—	C	Horizontal Sweep Select 0 1 micro sec/div 1 10 micro sec/div 2 100 micro sec/div 3 1 milli sec/div 4 10 milli sec/div 5 100 milli sec/div 6 External			
OV	0-3	—	C	Vertical Gain Select 0 10 V/div 1 1 V/div 2 0.1 V/div 3 0.01 V/div			
				RECEIVER			
RH	—	—	C	High Image			
RL	—	—	C	Low Image			
RN	—	—	C	Narrow band			
RW	—	—	C	Wide band			
RA	0-13	10's dB	C	Receive Mode Step Attenuator Setting 0 0 dB 1 10 dB 1 10 dB 1 10 dB 13 130 dB			
RE	0-100	—	O	Receive frequency error	4		MON

Table 21-3. Programming Commands (Cont)

Prefix	Data	Units	Type	Function	Changes To Display	Changes To Function	Changes To Mode
RP	0-1	—	O	Signal Presence Indication 0 No signal 1 Signal present			MON
R-	0-99.99	kHz	O	Minus Deviation	4	FM	MON
R+	0-99.99	kHz	O	Plus Deviation	4	FM	MON
R	0-99.99	%	O	Minus % AM	4	AM	MON
R	0-99.99	%	O	Plus % AM	4	AM	MON
				VOLTMETER			
VA	0-300	VOLTS	O	DVM AC	5		
VD	0-300	VOLTS	O	DVM DC	5		
VS	0-40.0	dB	O	Sinad Reading	4	6	GEN
				WATTMETER			
WE	1-9	—	D	Wattmeter element number 1 2.5 W 2 5 W 3 10 W 4 25 W 5 50 W 6 100 W 7 250 W 8 500 W 9 1000 W			
WI	0-132.0	WATTS	O	Internal Wattmeter reading	4		PWR MON
WF	0-1000	WATTS	O	Forward External Wattmeter Reading	7		
WR	0-1000	WATTS	O	Reverse External Wattmeter Reading	7		

Notes:
1. Display is defined by the data
2. External Frequency Counter Display
3. FM if not AM
4. Gen/Mon Mtr Display
5. DVM Display
6. FM if in DSBSC or SWEEP
7. External Wattmeter Display

21-23. The following are examples of correct data fields for the value 12.34:

0.1234 E+2	+0.1234 E2	1234 E-2	1234. E-2
+12.34	12.34 E	+1234 E-2	12.34 E0

21-24. Command Strings. A command string consists of either a single command or multiple commands in succession with or without embedded spaces. A command string must be terminated with a carriage return and a line feed character.

21-25. Command Types. Each command is one of three basic types, control selects (C), data entry (D), and output requests (O). Type information for each command is listed in table 21-3.

21-26. Control Selects. Control select commands select front panel switch settings. Some of these commands do not require accompanying data, such as toggle switch commands.

21-27. Data Entry. Data entry commands replace manual entry of data through the keyboard. All of these commands require data in the data field.

21-28. Output Requests. Output request commands allow data that is normally displayed on the CRT to be transferred to the controller. Accompanying data is not required with output requests. The data limits and units listed in table 21-3 for these commands refer to the return data. Output request commands cause the analyzer to go to the proper display, function, and mode to acquire the designated reading. These states are listed in table 21-3. The measurement however, is not made until a trigger command 'T' has been sent from the controller. The trigger command causes the measurement to be made and the data held for transmission to the controller. Then when the controller addresses the analyzer as a talker the data is output to the controller. A reading can be retaken for any number of triggers without repeating the output request. The request is lost however, when any command changing the display, function, or mode is sent.

21-29. Trigger Command. The trigger command is the exception to the two character command prefix. This command is simply the letter 'T' usually sent immediately following the output request command. If no output request is pending, the trigger command is ignored.

21-30. Return Data. The data returned from the analyzer is formatted similar to the control data as shown:

The data is always returned in this format with a single exception. Data for the "RP", signal present, command is returned as a single digit having a value of "0" or "1".

21-31. Data Sign. A + or - character indicates the sign of the return data.

21-32. Data Value. The data value is 1 to 5 digits in length with leading zero supression and no decimal point.

21-33. Exponent and Exponent Sign. The letter 'E' followed by a '-' character is always transmitted with return data.

21-34. Exponent Magnitude. The exponent magnitude is a single digit with a value from 0 to 9. The digit indicates the negative power of ten that is to be multiplied with the data value to obtain the units listed in table 21-3.

21-35. Programming Commands. Table 21-3 lists the programming commands available for the system analyzer. The table identifies the category and type of command, the data limits and units, the command function, and any display, function, or mode change that would occur.

21-36. Terminal Mode. When the command 'CD12' is used, the system terminal mode is enabled. The terminal mode allows the analyzer's CRT display and keyboard to perform as a limited function I/O terminal. Possible uses for the terminal mode would be to provide test instructions to a test operator at an auto test station.

21-37. Display Format. Once the 'CD12' command has been sent the terminal mode has been entered. All further ASCII valid characters sent from the controller will appear on the CRT display. The total display area on the CRT is 15 lines of 30 characters each. Character entry on the CRT is on the bottom line. Each line feed character causes the bottom line to move up one place. If more than 30 lines are entered, the top lines are lost off the top of the display. A list of valid ASCII characters for the display is provided in table 21-4 All invalid characters are ignored in the terminal mode.

21-38. Keyboard Entry. In the terminal mode the keyboards on the analyzer may be used to input data to the bus controller. The ten numeric keys and the left cursor key have predefined ASC II characters. The character corresponds to the number on the key for the numeric keys. For the left cursor key, carriage return and line feed characters are sent. The down cursor key causes a bus service request to be generated regardless of the operating mode. Thus this key could be used to halt an automatic test sequence.

21-39. The remaining pushbuttons are defined, prior to entering the terminal mode, with the use of the keyboard control commands listed in table 21-3. Each key is assigned an ASCII character by following the Kn command prefix with the decimal equivalent of the binary ASCII code for that character. A list of valid ASCII characters and their binary and decimal equivalents are listed in table 21-4.

21-40. Data that is entered from the keyboard is stored in a 9 character buffer until addressed by the bus controller. If more than 9 keypresses occur before the controller accesses the analyzer, the excess inputs are lost. Once the controller has addressed the analyzer, the analyzer transmits the character data to the controller. The analyzer will continue to transmit, or hold up the bus handshake if no keys have been pressed, until the left cursor key is pressed. Thus every data string entry from the keyboard must terminate with the left cursor key. As the data is transmitted to the controller it is also entered onto the CRT display.

21-41. Terminal Mode Exit. An ASCII end of transmission character (EOT) sent from the controller will terminate the terminal mode. When the mode is terminated the analyzer returns to the Gen/Mon Mtr display, and is ready to accept new command inputs.

21-42. Error Messages. Error messages are generated by the analyzer to help the programmer troubleshoot his program. As control commands are received by the analyzer, they are decoded to determine the command sent. If the analyzer is unable to decode the command it generates an error message and ignores all succeeding commands. To clear the error condition the bus controller must address the analyzer as a talker so that the error message will be transferred to the controller.

Table 21-4. Terminal Mode ASC II Characters
Printable Characters

ASCII Char.	Equivalent Binary	Hex	Dec	ASCII Char.	Equivalent Binary	Hex	Dec
SP	00100000	20	32	@	01000000	40	64
!	00100001	21	33	A	01000001	41	65
"	00100010	22	34	B	01000010	42	66
#	00100011	23	35	C	01000011	43	67
$	00100100	24	36	D	01000100	44	68
%	00100101	25	37	E	01000101	45	69
&	00100110	26	38	F	01000110	46	70
'	00100111	27	39	G	01000111	47	71
(	00101000	28	40	H	01001000	48	72
)	00101001	29	41	I	01001001	49	73
*	00101010	2A	42	J	01001010	4A	74
+	00101011	2B	43	K	01001011	4B	75
,	00101100	2C	44	L	01001100	4C	76
-	00101101	2D	45	M	01001101	4D	77
.	00101110	2E	46	N	01001110	4E	78
/	00101111	2F	47	O	01001111	4F	79
0	00110000	30	48	P	01010000	50	80
1	00110001	31	49	Q	01010001	51	81
2	00110010	32	50	R	01010010	52	82
3	00110011	33	51	S	01010011	53	83
4	00110100	34	52	T	01010100	54	84
5	00110101	35	53	U	01010101	55	85
6	00110110	36	54	V	01010110	56	86
7	00110111	37	55	W	01010111	57	87
8	00111000	38	56	X	01011000	58	88
9	00111001	39	57	Y	01011001	59	89
:	00111010	3A	58	Z	01011010	5A	90
;	00111011	3B	59	[	01011011	5B	91
	00111100	3C	60		01011100	5C	92
=	00111101	3D	61	]	01011101	5D	93
	00111110	3E	62		01011110	5E	94
?	00111111	3F	63	-	01011111	5F	95

NON-PRINTING CHARACTERS

ASCII Char.	Equivalent Binary	Hex	Dec
EOT*	00000100	04	4
BELL	00000111	07	7
BSP	00001000	08	8
LF	00001010	0A	10
CR	00001101	0D	13

*causes exit from terminal mode

21-43. The format of the error message is:

ERROR nn (CR)(LF)

The two digit number nn defines the error condition as listed in table 22-5. The carriage return (CR) and line feed (LF) characters are the termination sequence used by analyzer whenever it transmitts information. All characters are ASC II coded.

Table 21-5. Error Messages

Error Code	Condition
00	Data requested without trigger
01	Involid mnemonic prefix
02	One character mnemonic (not T)
03	Invalid mnemonic suffix
04	Exponent overflow
05	Data underflow
06	Data overflow
07	Data transmitted, not allowed
08	Invalid data
09	RF input power exceeded
10	Level or mod control error

21-44. To effectively utilize the error message capability of the analyzer it is necessary to address the unit as a talker after the transmission of each command string. The bus controller must then be programmed to recognize the error message and to decode the error number. A successful data transmission will send back an error code 00 when addressed as a talker. The controller should be programmed to ignore error 00 and to display any other error to the operator. Of course if a valid output command followed by the trigger command was sent, the talker address will result in the requested data being output to the controller.

21-45. Service Requests. There are only two conditions that will cause the analyzer to generate a service request (SRQ) on the bus. If a SRQ is generated it must be cleared by a serial poll of the analyzer. The serial poll is a bus command which results in a data byte being sent to the controller from the analyzer. The data byte indicates the cause of the SRQ. Table 22-6 lists the SRQ causes and the corresponding serial poll data.

Table 21-6. SRQ Data

	Return Data		
Condition	Binary	HEX	DEC
Depressing Cursor Down Key	01000001	41	65
RF load over Temperature	01000010	42	66

21-46. Programming Considerations. The flexibility of the IEEE-488 option is reflected in the number of programming commands. To use these effectively and efficiently, certain programming practices should be followed. The following paragraphs present the major considerations for effective programming.

21-47. Generate Mode. For accurate level control it is best to specify the generate frequency prior to the RF output level. For example, the command string:

CGGFIOOGL5

sets the generate mode, a frequency of 100 MHz and an output level of +5 dBm.

21-48. Code Synthesizer. Before enabling the output of the code synthesizer with an MS, ME, or MK command, all the necessary parameters must first be defined. Table 21-7 lists the modes and their controlled parameters that need to be defined. It should be noted that these parameters do not need to be defined each time a mode is selected, only when they are to be changed for that mode.

Table 21-7. Code Synthesizer Programming Considerations

Output	Command String	Effect
DPL Code	CF0AD131MM0MS3	FM, DPL Code 131, 3 kHz FM
DPL Inverted Code	CFAD313MM1MS5	FM, DPL Code 313, 5 kHz FM
PL Code	CF2AP60.5MMMS30	AM, PL-60.5 Hz, 30% AM
Tone A	CFAA2E3MM2MS3	FM, 2000 Hz, 3 kHz FM
Tone B	CFAB2000MM3MS3	FM, 2000 Hz, 3 kHz FM
Tone Remote	CFAA1.5E3AB300MM5MS3	FM, A = 1500 Hz, B = 300 Hz, 3 kHz FM
A/B Standard Sequence	CFAS4AA1E3AB2E3MM4MS3	FM, Sequence 4, A = 1 kHz, B = 2 kHz, 3 kHz FM
A/B User Sequence	CFAS5AA1E3AB2E3AW1	FM, Sequence 5, A = 1 kHz, B = 2 kHz
	AX1AY1AZ1MM4MS3	1 sec on/off times, 3 kHz FM

21-49. Modulation. The system analyzer is capable of modulating with three simultaneous sources. The commands ME, MK, and MS only affect their individual portion of the total output. Thus to avoid inadvertently having an unwanted modulation source enabled it is recommended that all three source values be defined together. For example;

CFMKMSME20

selects the FM mode, disables the 1 kHz and code synthesizer modulation, and set 20 kHz deviation from the external input. The external input must be applied to the analyzer prior to sending this command.

21-50. For the generate AM mode the frequency and output level must be defined prior to selecting the modulation level. The following command string is of the proper sequence to obtain 30% AM at 100 Mz with a level of -100 dBm:

CGGF100GL-100MEMSMK30

21-51. The bandwidth control commands, RN and RW, range the generate FM modulator sensitivity. For greater resolution and faster set up time for deviations less than 20 kHz use the narrowband 'RN' command. Above 20 kHz deviation the wideband 'RW' command must be used.

MOTOROLA INC.
Communications Group

MOTOROLA BATTERY PACK

MODEL RTP-1002A

1. DESCRIPTION

The RTP-1002A is a battery pack and charger designed to be mounted to the back of the R-2001 Communications System Analyzer. The unit contains battery capacity to operate the R-2001 for approximately one hour. A constant current charging system is capable of recharging the batteries in 16 hours.

2. OPERATION

2.1 The RTP-1002A Battery Pack is automatically engaged when no ac power is present, and the power switch is either in the ON or STANDBY positions. When ac power is applied, the R-2001 automatically switches the RTP-1002A Battery Pack out of the circuit and draws its power from the ac power source.

2.2 When the power switch is in the OFF or STANDBY position and ac power is applied to the R-2001, the RTP-1002A Battery Pack draws dc current from the R-2001 to activate the charging circuit. The charging circuit delivers approximately 750 mA of current until the battery voltage reaches 14 volts. As the battery voltage reaches 14 volts, the current drops to approximately 25 mA and the high-charge indicator LED extinguishes.

2.3 When the R-2001 systems analyzer is used with the RTP-1002A Battery Pack, it is recommended to keep the power switch in the STANDBY position whenever possible. This extends the time the battery is able to operate the R-2001 Communications System Analyzer. The low trickle charge rate enables the batteries to be left on charge indefinitely without damage due to overcharging.

CAUTION

Do NOT permit battery discharge below 10.4 V dc as indicated on CRT in DVM display mode; immediately turn unit "OFF". Allowing battery discharge below this level may result in permanent damage to the battery. The R-2001 should be plugged into ac power (117/234 V ac) with the power switch in "OFF" or "STANDBY" position to recharge the batteries.

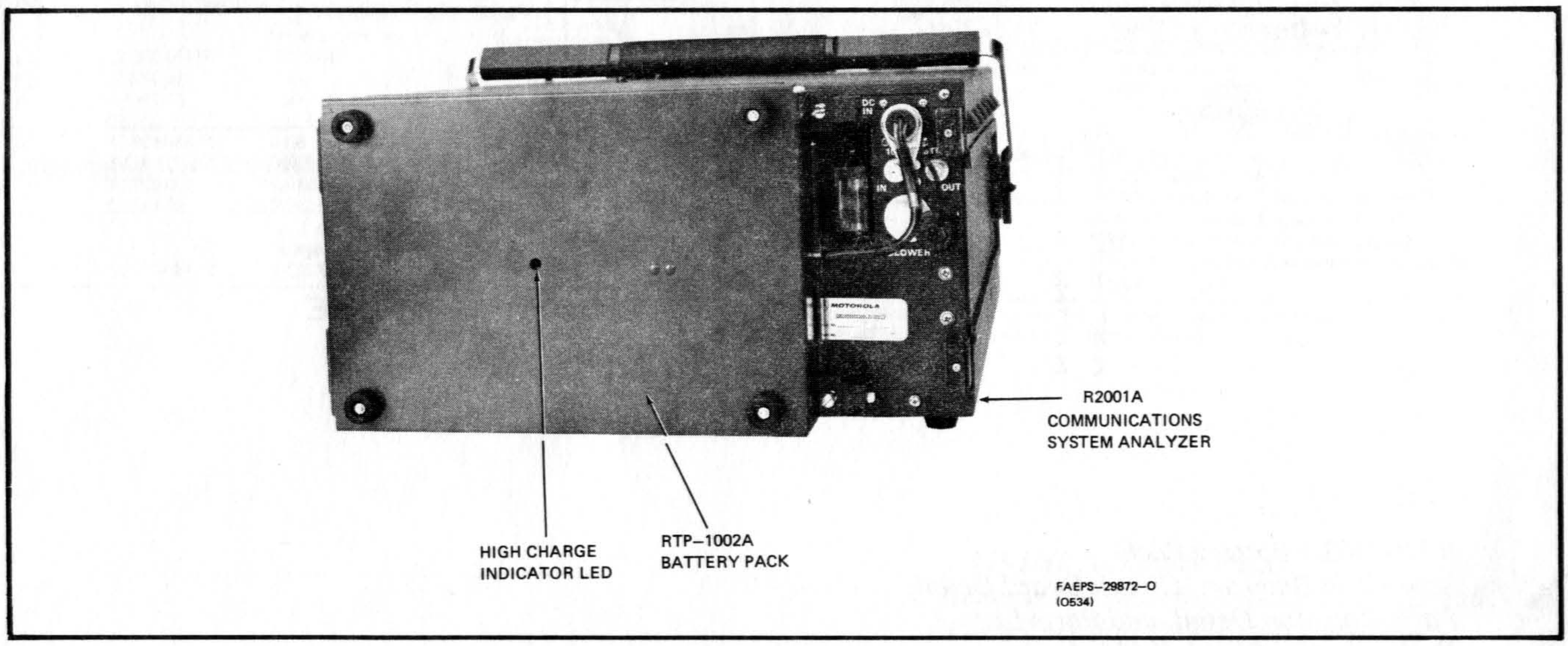

RTP-1002A Battery Pack Mounting Detail

© Motorola, Inc. 1981
All Rights Reserved
Printed in U.S.A.

68P81122E59-B
6/29/81-SK

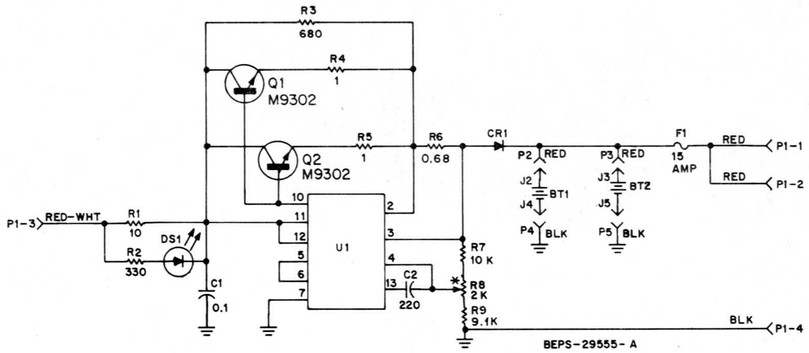

* WITH THE BATTERIES REMOVED (BT1 AND BT2) AND A 30–OHM; 10 WATT RESISTOR IN PLACE OF THE BATTERIES, SET R8 FOR 14.45V ± 50MV USING A DIGITAL VOLTMETER ACROSS THE BATTERY TERMINALS.

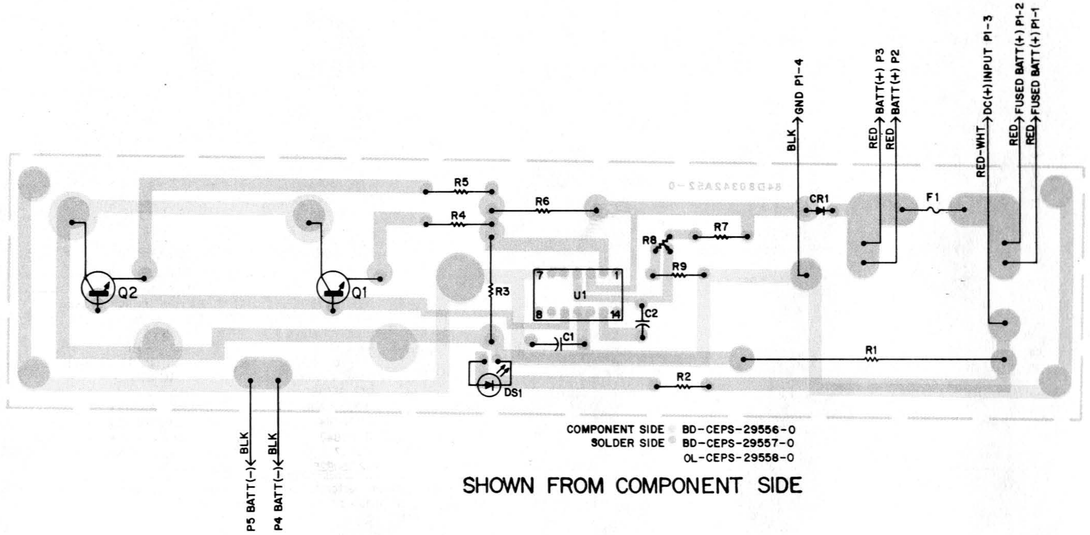

SHOWN FROM COMPONENT SIDE

RTP-1002A Battery Pack
Schematic Diagram, Circuit Board Detail,
Parts Location Detail, and Parts List
Motorola No. ***PEPS-29554-A***
(Sheet 1 of 2)
6/29/81-SK

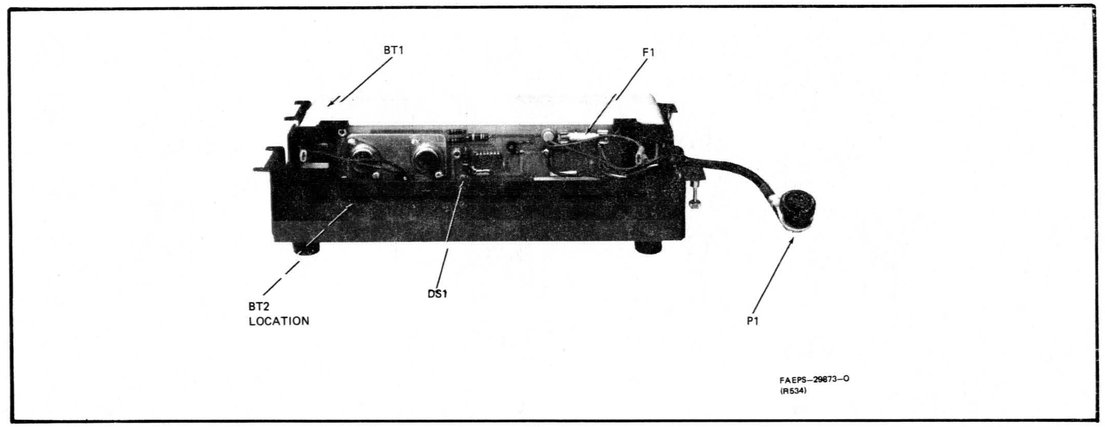

RTP-1002A Battery Pack Parts Location Detail

parts list

RTP-1002A Battery Pack — PL-6816-A

REFERENCE SYMBOL	MOTOROLA PART NO.	DESCRIPTION
		battery, 12 V:
BT1, 2	60-80340A88	6-cell
		capacitor, fixed:
C1	8-82096J18	.1 uF ± 10%; 250 V
C2	21-83596E10	220 pF ± 20%; 500 V
		diode: (see note)
CR1	48-82525G01	silicon
		light emitting diode:
DS1	48-82019L05	LED
		fuse:
F1	65-804906	15A slow blow
		transistor: (see note)
Q1, 2	48-869302	NPN; type M9302
		resistor, fixed: ± 10%; 1/4 W: unless otherwise stated
R1	17-80344A60	10; 10 W
R2	6-124C37	330
R3	6-126C45	680; 1 W
R4, 5	6-125B70	1 ± 5%; 1/2 W
R6	17-80344A71	0.68 ± 5%; 2 W
R7	6-124A73	10k ± 5%
R8	18-80342A10	variable: 2k ± 20%; 1/2 W
R9	6-124A72	9.1k ± 5%
		integrated circuit: (see note)
U1	51-80342A59	MC1723CL

REFERENCE SYMBOL	MOTOROLA PART NO.	DESCRIPTION
		non-referenced items
	1-80304A71	BATTERY CASE includes:
	27-80335A41	CASE, battery
	3-80340A89	SCREW, captive: 6-32 x 21/32"; 2 used
	41-80342A53	SPRING, clip
	15-80340A92	COVER, battery case
	1-80304A72	CIRCUIT BOARD ASSEMBLY includes:
	42-82690A01	CLIP, fuseholder: 2 used
	43-865080	STANDOFF, threaded: 4 used
	1-80304A73	LEAD ASSEMBLY, battery (red) includes:
	30-10310A26	WIRE, No. 16 stranded: 4-1/2" used
	29-859118	CONTACT, receptacle
	1-80304A74	LEAD ASSEMBLY, battery (black) includes:
	10-134301	WIRE, No. 16 stranded: 4-1/2" used
	29-859118	CONTACT, receptacle
	3-120938	SCREW, machine: 4-40 x 5/16"; 4 used
	4-7667	WASHER, lcok: No. 4 external tooth; 4 used
	64-80342A54	PLATE, heatsink
	1-80303A91	CABLE ASSEMBLY includes:
	15-10811A08	HOUSING, connector: 4-pin
	9-83741F01	CONTACT, receptacle: 4 used
	42-80340A90	CLAMP, cable
	2-2888	NUT, hex: 5/8-24
	2-7005	NUT, hex: 6-32; 4 used
	4-7666	WASHER, lock: No. 6 external tooth; 4 used
	14-80340A91	INSULATOR BOARD
	75-82566B01	FOOT, rubber: 4 used
	3-80342A46	SCREW, machine: 6-32 x 1/2"; 4 used
	3-136774	SCREW, machine: 4-40 x 1/4"; 5 used
	3-132840	SCREW, machine: 8-32 x 5/8"; 2 used
	4-7667	WASHER, lock: No. 4 external tooth; 5 used
	42-850925	CLAMP

note: For optimum performance, replacement diodes, transistors and integrated circuits must be ordered by Motorola part numbers.

RTP-1002A Battery Pack
Schematic Diagram, Circuit Board Detail,
Parts Location Detail, and Parts List
Motorola No. ***PEPS-29554-A***
(Sheet 2 of 2)
6/29/81-SK

MOTOROLA INC.
Communications Group

R-2001B/R-2002B COMMUNICATIONS SYSTEM ANALYZER

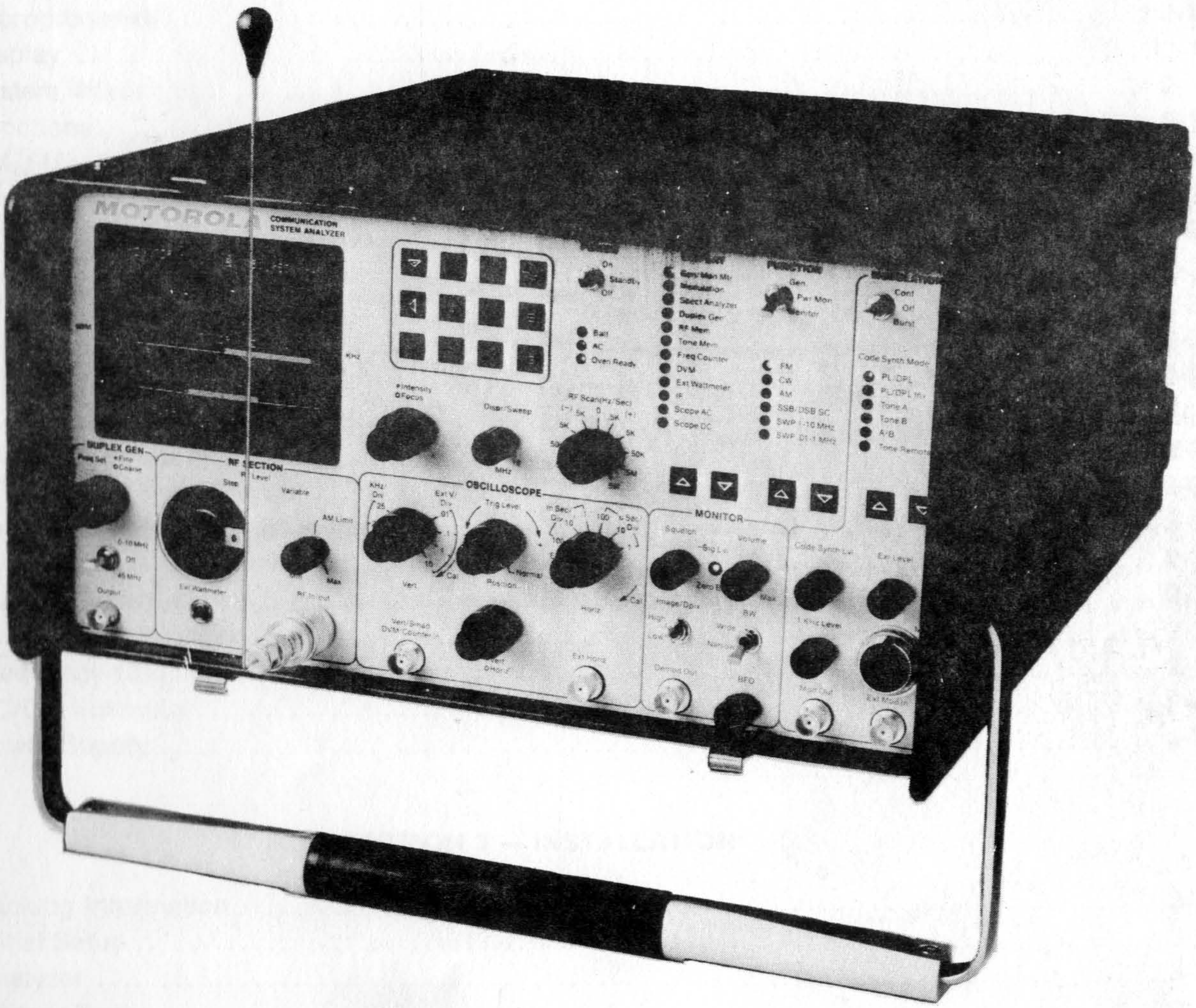

© Motorola, Inc. 1980
All Rights Reserved
Printed in U.S.A.

1313 E. Algonquin Road, Schaumburg, Il. 60196

68P81069A93-O
6/30/81-SK