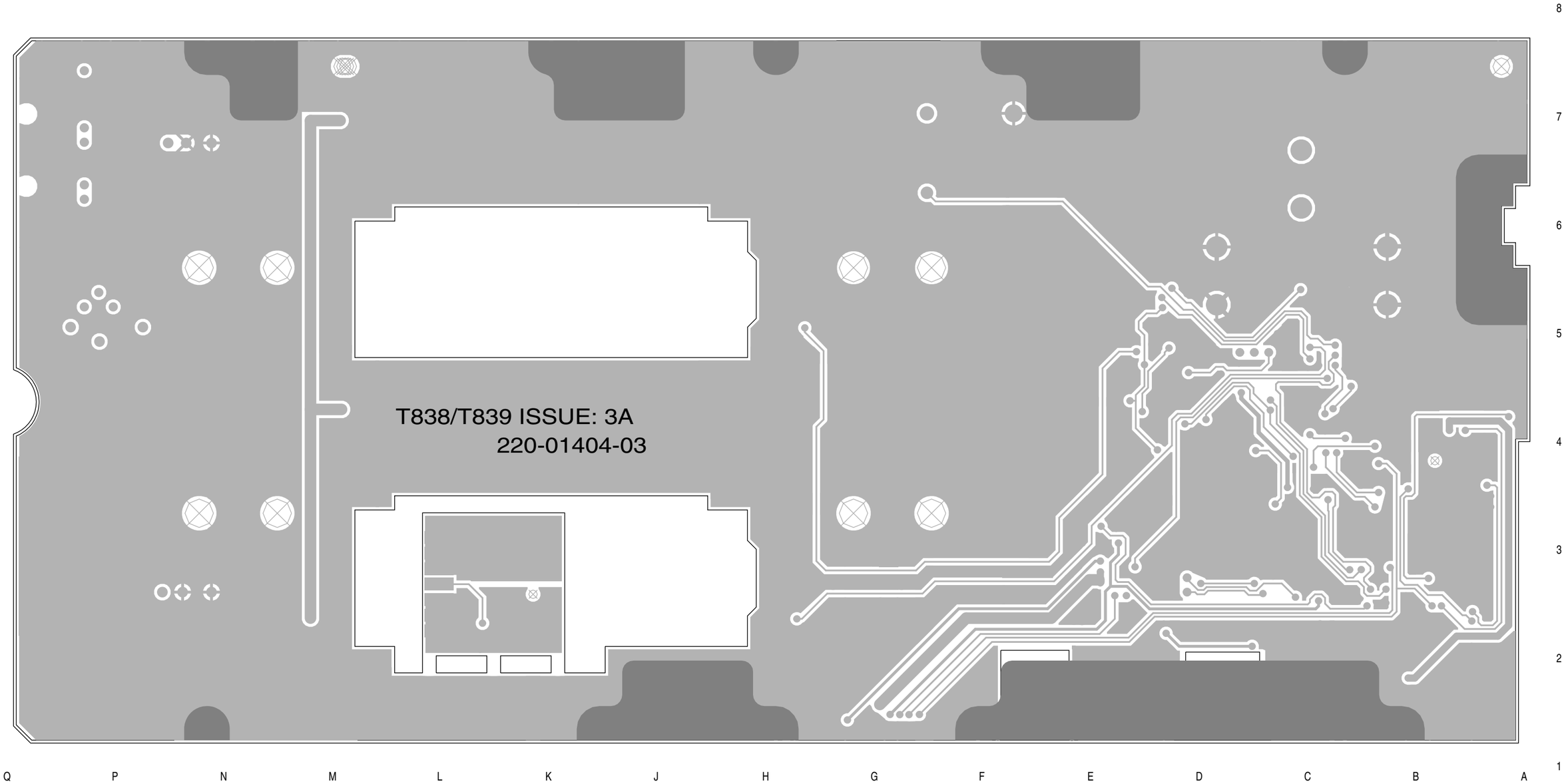

T838 PCB Layout - Bottom Side
220-01404-03

Copyright TEL

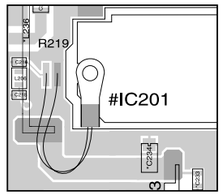

A different type of thermistor is used for R219 in later production PAs, as shown at left. This thermistor must be positioned as shown in the drawing so that its performance is not affected by high levels of RF in adjacent tracks.

*L201 is fitted to Series II compatible PAs only.

*RV111 may be fitted instead of RV109 to convert the output power adjustment to internal access only.

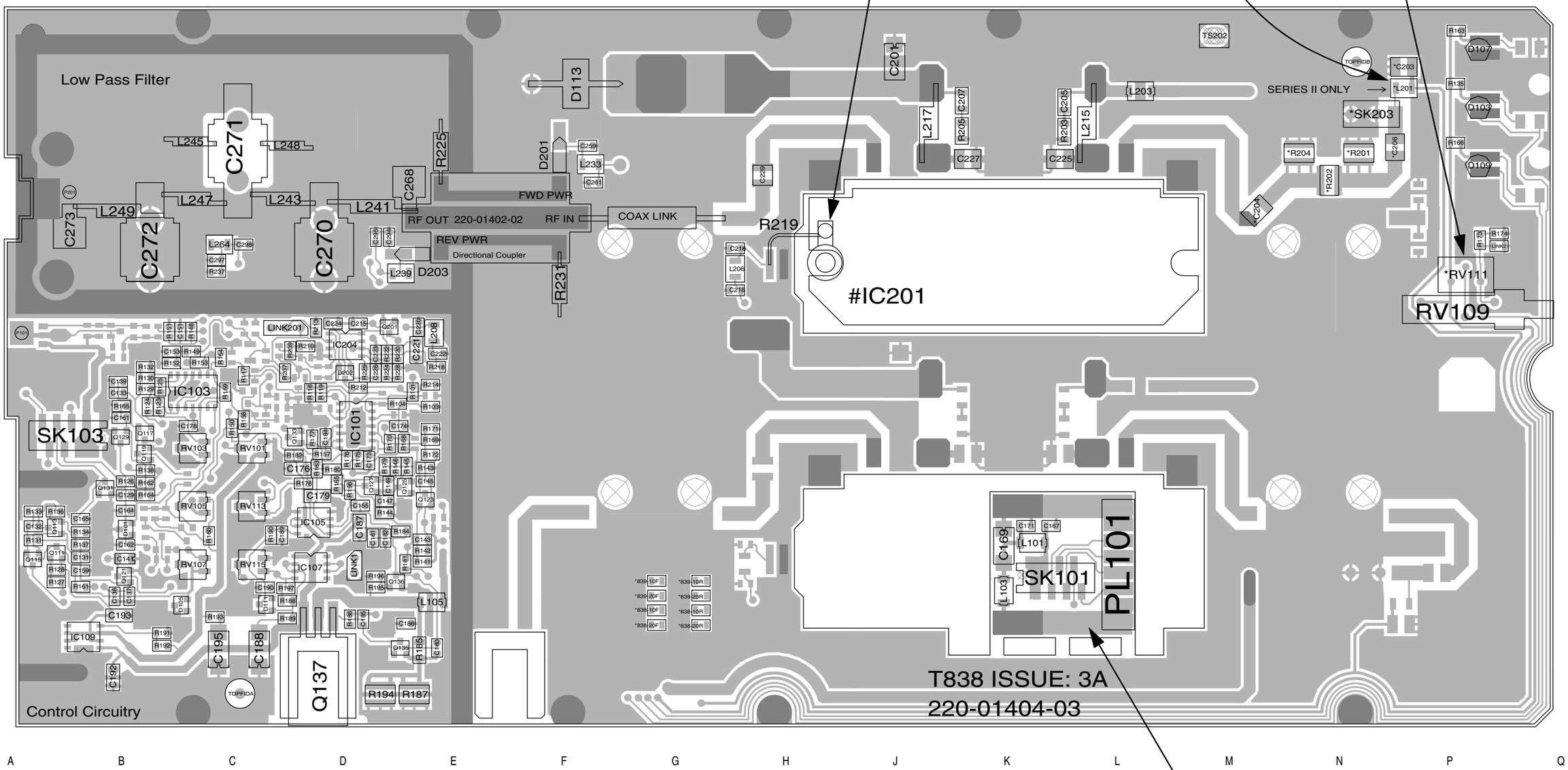

The circuitry for the break-off D-range PCB is shown on the control section circuit diagram.

T838 PCB Layout - Top Side
220-01404-03

Copyright TEL

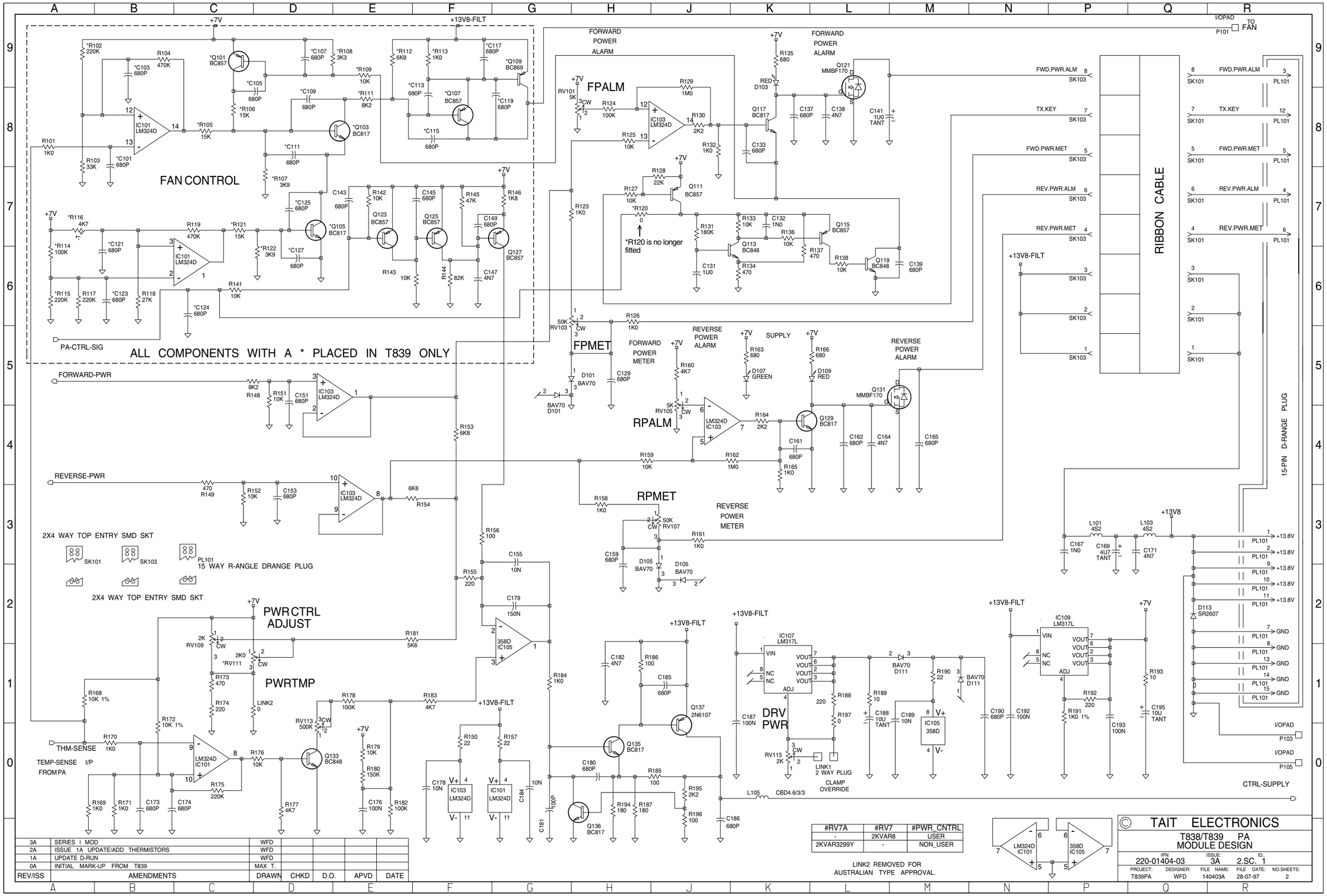

The control section circuit diagram is the same for both the T838 and T839 and is reproduced in both PCB information sections for your convenience.

Sheet 1 - T838 Control Section
220-01404-03

Copyright TEL

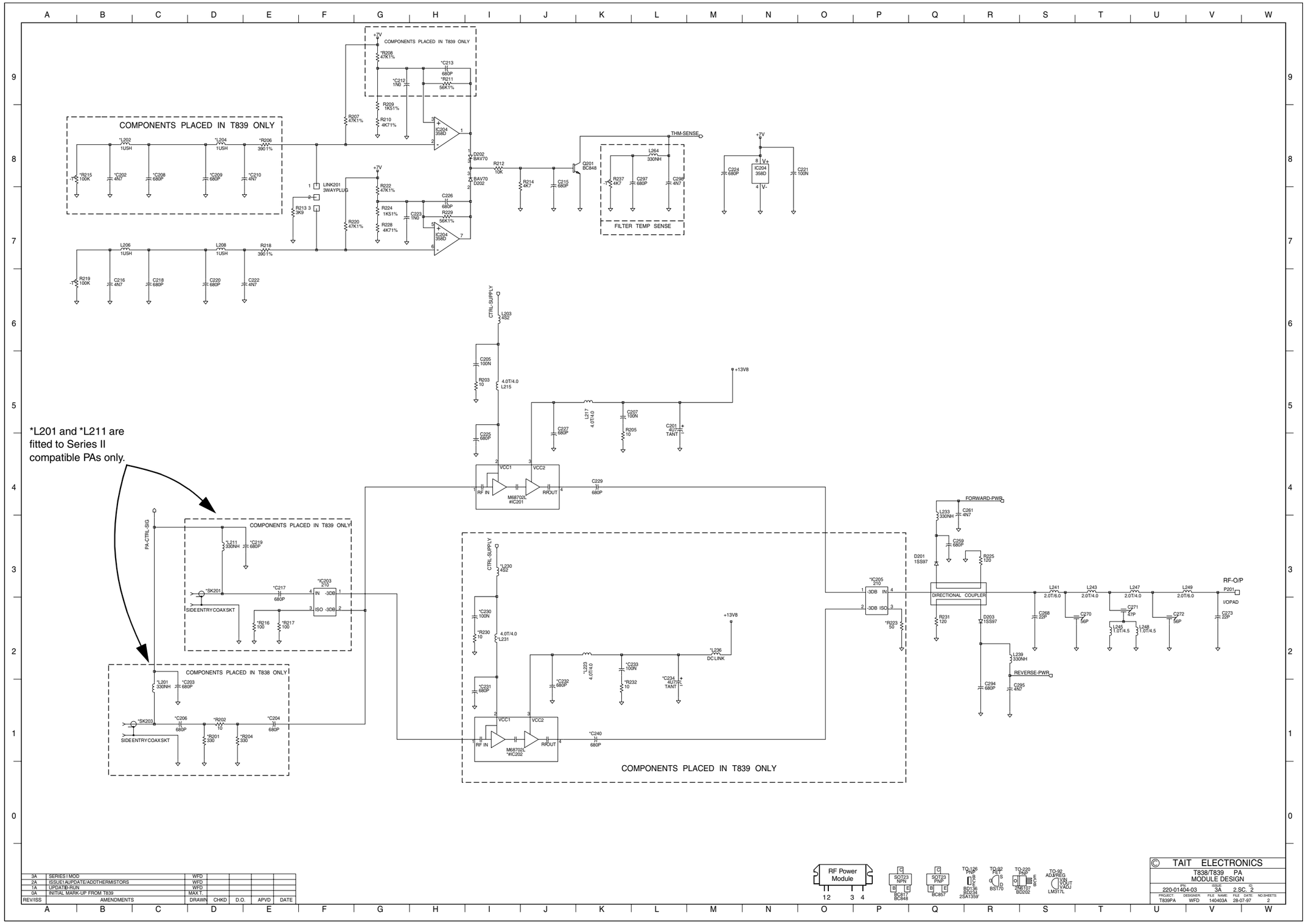

REV/ISS	AMENDMENTS	DRAWN	CHKD	D.O.	APVD	DATE
3A	SERIES1MOD	WFD				
2A	ISSUE1AUPDATE/ADDTHERMISTORS	WFD				
1A	UPDATE-RUN	WFD				
0A	INITIAL MARK-UP FROM T839	MAX T.				

RF Power Module

SOT23 NPN BC817 BC848 · SOT23 PNP BC857 · TO-126 PNP BD136 BD234 2SA1359 · TO-92 FET BST70 · TO-220 PNP 2N6107 BD202 · TO-92 ADJREG LM317L

© TAIT ELECTRONICS
T838/T839 PA MODULE DESIGN

IPN	SIZE	ID
220-01404-03	3A	2.SC. 2

PROJECT	DESIGNER	FILE NAME	FILE	DATE	NO.SHEETS
T839PA	WFD	140403A		28-07-97	2

The circuit diagram for the RF & thermistor control sections is the same for both the T838 and T839 and is reproduced in both PCB information sections for your convenience.

Sheet 2 - T838 RF & Thermistor Control Sections
220-01404-03

Copyright TEL